SCHUNK®




# GRIPPING MODULES

AUTOMATION

2010

## SCHUNK takes the initiative. For you!

As a worldwide competence leader in gripping systems we are in the middle of the market. As the first in developing solutions for highly specialized industry segments you as our customer are continuously in the center of our efforts. We respect your requirements within our products and create new potential for faster, more efficient and more flexible processes.

We are one of the innovative market leaders that heavily influences the state-of-the-art technology. We continuously set new forward-looking elements for the entire automation industry.

Profit from our one-of-a-kind powerful offering: gripping modules, rotary- and swivel modules, linear modules, robot accessories and customer specific solutions.

Discover a partner that can innovatively and sustainably strengthen your company and your business. In every industry. Worldwide.



GRIPPING MODULES



ROTARY MODULES



LINEAR MODULES



ROBOT ACCESSORIES



MODULAR ASSEMBLY AUTOMATION



MODULAR ROBOTICS

CONTENTS

# Gripping Systems


| | | |
|---|---|---|
| **Product Overview/Product Selection Table** | **Page** | **4/6** |
| **Synergies with SCHUNK** | **Page** | **10** |
| **Partners with a System Approach** | **Page** | **12** |
| **SCHUNK sets Standards** | **Page** | **14** |
| **Gripping Systems Pneumatic** | | |
| 2-Finger Parallel Gripper | **Page** | **21** |
| 3-Finger Centric Gripper | **Page** | **561** |
| Multi-Finger Centric Gripper | **Page** | **839** |
| 2-Finger Angular Gripper | **Page** | **883** |
| 3-Finger Angular Gripper | **Page** | **995** |
| 2-Finger Radial Gripper | **Page** | **1013** |
| **Modular Gripping System** | **Page** | **1095** |
| **Gripper-Swivel System** | **Page** | **1113** |
| **Gripping Systems Electric** | | |
| 2-Finger Parallel Gripper | **Page** | **1201** |
| 3-Finger Centric Gripper | **Page** | **1277** |
| **Special Gripper** | **Page** | **1291** |
| **Accessories** | **Page** | **1341** |
| **Your Contact Partners at SCHUNK**<br>SCHUNK-Service<br>Subsidaries/Distribution partners<br>Plants<br>Fax Order/Catalog Order | **Page** | **1545** |

# Product Overview

## Gripping Modules

### Pneumatic Gripping Modules


**2-Finger Gripper for small components**

 MPG 10 - 80 Page 22

 KTG 50 Page 78

 KGG 60 - 280 Page 86

 RH 801 KP - 9010 Page 128

**2-Finger Universal Gripper**

 LGP 8 - 40 Page 162

 PGN-plus 40 - 380 Page 180

 JGP 40 - 160 Page 280

 PGF 50 - 125 Page 346

 PGM 29 - 140 Page 370

 PGB 64 - 125 Page 406

**Sealed 2-Finger Parallel Gripper**

 DPG-plus 40 - 300 Page 440

**2-Finger Long-stroke Gripper**

 PFH 30 - 50 Page 490

 PFH 150 - 300 Page 506

 PSH 22 - 52 Page 526

**2-Finger Heavy-load Gripper**

 SPG 100 Page 552

**3-Finger Gripper for small components**

 MPZ 16 - 45 Page 562

**3-Finger Universal Gripper**

 LGZ 16 - 50 Page 590

 PZN-plus 40 - 300 Page 600

 JGZ 40 - 160 Page 690

 PZB-plus 50 - 160 Page 746

**Sealed 3-Finger Centric Gripper**

 DPZ-plus 40 - 200 Page 792

**4-Finger Centric Gripper**

 PZV 64 - 200 Page 840

**2-Finger Angular Gripper for small components**

 SGB 32 - 50 Page 884

 SWG 10 - 50 Page 900

**2-Finger Universal Angular Gripper**

 LGW 10 - 40 Page 932

 PWG-S 40 - 80 Page 946

 PWG 65 - 230 Page 962

**3-Finger Angular Gripper**

 SGW 40 - 64 Page 996

**2-Finger Universal Radial Gripper**

 LGR 10 - 40 Page 1014

**2-Finger Universal Radial Gripper**


PRG 26 - 125 Page 1028


DRG 44 - 100 Page 1064

**KONEX Modular Gripping System**


KONEX P 50 Page 1100


KONEX S 50 Page 1104


KONEX H 50 Page 1108

**GSM Gripper Swivel Modules**


GSM-P 32 - 64 Page 1116


GSM-Z 30 - 45 Page 1136


GSM-W 16 - 40 Page 1152


GSM-R 16 - 40 Page 1176

**Electric Gripping Modules**

**2-Finger Gripper for small components**


MEG 40 - 64 Page 1204

**2-Finger Universal Gripper**


EGN 80 - 160 Page 1220


PG 70 Page 1236


EVG 55-40/-100 Page 1244

**2-Finger Long-stroke Gripper**


PEH 30 - 50 Page 1252

**2-Finger Long-stroke Gripper**


LEG 760 Page 1268

**3-Finger Universal Gripper**


EZN 64 / 100 Page 1278

**Special Gripper**

**Food Gripper**


LMG 44 - 64 Page 1292

**O-ring Assembly Gripper**


ORG 85 Page 1300

**Gripper with shaft interface**


GSW-B 50 - 100 Page 1310


GSW-V 20 - 32 Page 1324


RGG 20 Page 1334

# Product Selection Table

## Gripping Modules

| | | Stoke per finger [mm] | | | Gripping force [N] | | | |
|---|---|---|---|---|---|---|---|---|
| **Pneumatic 2-Finger Parallel Gripper** | | 1-10 | 11-100 | 101-300 | 10-100 | 101-1000 | 1001-10000 | 10001-100000 |
| **DPG-plus** | Page 440 | 2 – 25 | | | | 110 – 5940 | | |
| **JGP** | Page 280 | 2.5 – 16 | | | | 123 – 2210 | | |
| **KGG** | Page 86 | | 10 – 60 | | 45 – 540 | | | |
| **KTG** | Page 78 | 4.5 | | | 13 | | | |
| **LGP** | Page 162 | 2 – 13 | | | 26 – 1090 | | | |
| **MPG** | Page 22 | 1 – 14 | | | 9 – 540 | | | |
| **PFH 30 - 50** | Page 490 | | 30 – 100 | | | 630 – 2950 | | |
| **PFH 150 - 300** | Page 506 | | | 150 – 300 | | 2200 | | |
| **PGB** | Page 406 | 4 – 10 | | | 90 – 610 | | | |
| **PGF** | Page 346 | 7.5 – 31.5 | | | | 240 – 1900 | | |
| **PGM** | Page 370 | 2 – 15 | | | 30 – 1180 | | | |
| **PGN-plus** | Page 180 | 2 – 45 | | | | 123 – 21150 | | |
| **PSH** | Page 526 | | 14 – 100 | | | 320 – 1760 | | |
| **RH** | Page 128 | 2.5 – 40 | | | 13 – 460 | | | |
| **SPG** | Page 552 | | 100 | | | | | 10000 |
| **Electric 2-Finger Parallel Gripper** | | | | | | | | |
| **EGN** | Page 1220 | 8 – 16 | | | | 400 – 1000 | | |
| **EVG** | Page 1244 | | 20 – 50 | | 24 – 57 | | | |
| **LEG** | Page 1268 | | | 281 | | 1050 – 1500 | | |
| **MEG** | Page 1204 | 6 – 10 | | | 40 – 175 | | | |
| **PEH** | Page 1252 | | 60 – 100 | | | 750 – 1800 | | |
| **PG** | Page 1236 | | 34 | | | 200 | | |
| **Pneumatic 3-Finger Centric Gripper** | | | | | | | | |
| **DPZ-plus** | Page 792 | 2 – 25 | | | | 230 – 16500 | | |
| **JGZ** | Page 690 | 2.5 – 16 | | | | 255 – 8480 | | |
| **LGZ** | Page 590 | 3 – 7 | | | | 120 – 1470 | | |
| **MPZ** | Page 562 | 1 – 5 | | | 20 – 310 | | | |
| **PZB-plus** | Page 746 | 2 – 13 | | | | 340 – 5400 | | |
| **PZN-plus** | Page 600 | 2 – 35 | | | | 255 – 35500 | | |
| **Electric 3-Finger Centric Gripper** | | | | | | | | |
| **EZN** | Page 1278 | 6 – 10 | | | | 500 – 800 | | |
| **Pneumatic 4-Finger Centric Gripper** | | | | | | | | |
| **PZV** | Page 840 | 4 – 16 | | | | 570 – 6900 | | |
| **Gripper for Automatic Machine Operation** | | | | | | | | |
| **GSW-B** | Page 1310 | 2 – 10 | | | | 140 – 5900 | | |

Well suited

Suitable in a special design (on request)

Limited suitability

| | | Working environment | | | | | | Typical areas of application | | | | | | | | |
|---|---|---|---|---|---|---|---|---|---|---|---|---|---|---|---|---|
| | | Normal, clean environment | Dirty environment I Grit | Dirty environment II Fine dust and fluids | Dirty environment III Aggressive fluids | High temperature range > 90 °C | Clean room | Machine tools | Material feed Component insertion | Assembly | Packaging | Electronics | Paintshop | Clean room/laboratory | Foundry | Food |
| **Pneumatic 2-Finger Parallel Gripper** | | | | | | | | | | | | | | | | |
| **DPG-plus** | Page 440 | | | | | | | ● | ● | | | | ● | | ● | |
| **JGP** | Page 280 | | | | | | | | ● | | | | ● | | ● | |
| **KGG** | Page 86 | | | | | | | | ● | ● | ● | ● | | | | |
| **KTG** | Page 78 | | | | | | | | ● | ● | ● | ● | | | | |
| **LGP** | Page 162 | | | | | | | | ● | ● | ● | ● | | | | |
| **MPG** | Page 22 | | | | | | | | ● | ● | ● | ● | | | | |
| **PFH 30 - 50** | Page 490 | | | | | | | | ● | ● | ● | | | | | |
| **PFH 150 - 300** | Page 506 | | | | | | | | ● | ● | ● | | | | | |
| **PGB** | Page 406 | | | | | | | ● | ● | ● | ● | ● | | | | |
| **PGF** | Page 346 | | | | | | | | ● | ● | ● | | | | | |
| **PGM** | Page 370 | | | | | | | ● | ● | ● | ● | ● | | | | |
| **PGN-plus** | Page 180 | | | | | | | ● | ● | ● | ● | ● | | | ● | |
| **PSH** | Page 526 | | | | | | | ● | ● | ● | ● | | | | | |
| **RH** | Page 128 | | | | | | | | ● | ● | ● | ● | | | | |
| **SPG** | Page 552 | | | | | | | | ● | ● | | | | | ● | |
| **Electric 2-Finger Parallel Gripper** | | | | | | | | | | | | | | | | |
| **EGN** | Page 1220 | | | | | | | | ● | ● | ● | ● | | | | |
| **EVG** | Page 1244 | | | | | | | | ● | ● | | ● | | ● | | |
| **LEG** | Page 1268 | | | | | | | | ● | ● | ● | | | ● | | |
| **MEG** | Page 1204 | | | | | | | | ● | ● | ● | ● | | ● | | |
| **PEH** | Page 1252 | | | | | | | | ● | ● | | ● | | | | |
| **PG** | Page 1236 | | | | | | | | ● | ● | | ● | | ● | | |
| **Pneumatic 3-Finger Centric Gripper** | | | | | | | | | | | | | | | | |
| **DPZ-plus** | Page 792 | | | | | | | ● | ● | | | | ● | | ● | |
| **JGZ** | Page 690 | | | | | | | | ● | ● | ● | ● | | | | |
| **LGZ** | Page 590 | | | | | | | | ● | ● | ● | ● | | | | |
| **MPZ** | Page 562 | | | | | | | ● | ● | ● | ● | ● | | | ● | |
| **PZB-plus** | Page 746 | | | | | | | ● | ● | ● | ● | ● | | | ● | |
| **PZN-plus** | Page 600 | | | | | | | ● | ● | ● | ● | ● | | | ● | |
| **Electric 3-Finger Centric Gripper** | | | | | | | | | | | | | | | | |
| **EZN** | Page 1278 | | | | | | | | ● | ● | ● | ● | | | | |
| **Pneumatic 4-Finger Centric Gripper** | | | | | | | | | | | | | | | | |
| **PZV** | Page 840 | | | | | | | ● | ● | ● | ● | ● | | | ● | |
| **Gripper for Automatic Machine Operation** | | | | | | | | | | | | | | | | |
| **GSW-B** | Page 1310 | | | | | | | ● | | | | | | | | |

# Product Selection Table

## Gripping Modules

| | | Stroke per finger [mm] | | | Gripping force [N] | | | Torque [Nm] | | |
|---|---|---|---|---|---|---|---|---|---|---|
| **Pneumatic Modular Gripping System** | | 1-5 | 6-10 | 11-20 | 1-200 | 201-300 | 301-400 | 0.0-1.0 | 1.1-2.0 | 2.1-3.0 |
| **KONEX** | Page 1096 | 5 | | | 100 | | | 0.9 | | |
| **Pneumatic Gripper Swivel Modules** | | | | | | | | | | |
| **with 2-Finger Parallel Gripper** | | | | | | | | | | |
| **GSM-P** | Page 1116 | 4 | 10 | | 39 | 162 | | 0.3 | | 2.9 |
| **with 3-Finger Centric Gripper** | | | | | | | | | | |
| **GSM-Z** | Page 1136 | 3 | 5 | | 55 | | 310 | 0.3 | | 2.7 |

| | | Opening angle [°] | | Gripping moment [Nm] | | | Torque [Nm] | | |
|---|---|---|---|---|---|---|---|---|---|
| **Pneumatic Gripper Swivel Modules** | | 1-10 | 11-100 | 0.01-10 | 11-100 | 101-1000 | 0.0-1.0 | 1.1-2.0 | 2.1-3.0 |
| **with 2-Finger Angular Gripper** | | | | | | | | | |
| **GSM-W** | Page 1152 | | 20 | 0.46 | 5.6 | | 0.3 | | 2.9 |
| **with 2-Finger Radial Gripper** | | | | | | | | | |
| **GSM-R** | Page 1176 | | 90 | 0.45 | 7.5 | | 0.3 | | 2.9 |

| | | Opening angle [°] | | Gripping moment [Nm] | | | Torque [Nm] | | |
|---|---|---|---|---|---|---|---|---|---|
| **Pneumatic Angular Gripper** | | 1-10 | 11-100 | 0.01-10 | 11-100 | 101-1000 | 0.1-1.0 | 1.1-2.0 | 2.1-3.0 |
| **LGW** | Page 932 | | 20 | 0.22 | 11.2 | | | | |
| **LMG** | Page 1292 | | 90 | 8.2 | 31.5 | | | | |
| **PWG** | Page 962 | | 20 | 6.44 | | 934.2 | | | |
| **PWG-S** | Page 946 | | 20 | 5.98 | 50.82 | | | | |
| **SGB** | Page 884 | 8 | | 0.9 | 4.95 | | | | |
| **SWG** | Page 900 | | 15 | 0.01 - 2.8 | | | | | |
| **Pneumatic 3-Finger Angular Gripper** | | | | | | | | | |
| **SGW** | Page 996 | 8 | | 1.35 | 7.45 | | | | |
| **Pneumatic Radial Gripper** | | | | | | | | | |
| **DRG** | Page 1064 | | 90 | 8.2 | | 143 | | | |
| **LGR** | Page 1014 | | 90 | 0.3 | 15 | | | | |
| **PRG** | Page 1028 | | 30 90 | 2 | | 295 | | | |

Well suited

Suitable in a special design (on request)

Limited suitability

| | | Ambient conditions | | | | | | Typical areas of application | | | | | | | | |
|---|---|---|---|---|---|---|---|---|---|---|---|---|---|---|---|---|
| | | Normal, clean ambient conditions | Dirty environment I Grit | Dirty environment II Fine dust an fluids | Dirty environment III Aggressive fluids | High temperature range > 90 °C | Clean room | Machine tools | Material feed Component insertion | Assembly | Packaging | Electronics | Paintshop | Clean room/laboratory | Foundry | Food |
| **Pneumatic Modular Gripping System** | | | | | | | | | | | | | | | | |
| **KONEX** | Page 1096 | | | | | | | | ● | ● | ● | ● | | | | |
| **Pneumatic Gripper Swivel Modules** | | | | | | | | | | | | | | | | |
| **with 2-Finger Parallel Gripper** | | | | | | | | | | | | | | | | |
| **GSM-P** | Page 1116 | | | | | | | | ● | ● | ● | ● | | | | |
| **with 3-Finger Centric Gripper** | | | | | | | | | | | | | | | | |
| **GSM-Z** | Page 1136 | | | | | | | | ● | ● | ● | ● | | | | |
| **Pneumatic Gripper Swivel Modules** | | | | | | | | | | | | | | | | |
| **with 2-Finger Angular Gripper** | | | | | | | | | | | | | | | | |
| **GSM-W** | Page 1152 | | | | | | | | ● | ● | ● | ● | | | | |
| **with 2-Finger Radial Gripper** | | | | | | | | | | | | | | | | |
| **GSM-R** | Page 1176 | | | | | | | | ● | ● | ● | ● | | | | |
| **Pneumatic Angular Gripper** | | | | | | | | | | | | | | | | |
| **LGW** | Page 932 | | | | | | | | ● | ● | ● | ● | | | | |
| **LMG** | Page 1292 | | | | | | | | | | ● | | | | | ● |
| **PWG** | Page 962 | | | | | | | | ● | ● | ● | | | | | |
| **PWG-S** | Page 946 | | | | | | | | ● | ● | ● | | | | | |
| **SGB** | Page 884 | | | | | | | | | ● | ● | ● | | | | ● |
| **SWG** | Page 900 | | | | | | | | | ● | ● | ● | | | | ● |
| **Pneumatic 3-Finger Angular Gripper** | | | | | | | | | | | | | | | | |
| **SGW** | Page 996 | | | | | | | | | | | | | | | |
| **Pneumatic Radial Gripper** | | | | | | | | | | | | | | | | |
| **DRG** | Page 1064 | | | | | | | ● | ● | | | | ● | | ● | |
| **LGR** | Page 1014 | | | | | | | | ● | ● | ● | ● | | | | |
| **PRG** | Page 1028 | | | | | | | | ● | ● | ● | | | | | |

# Synergies with SCHUNK

## SCHUNK SYNERGY:
## Toolholding/Workholding and Automation

**Visions in two technology areas**

Toolholding/workholding and automation are our core competences. The resulting synergy effects make us unique. SCHUNK understands this complex world of clamping and handling like no one else. As a long-standing components specialist we know the demands and requirements of both technology areas. Moreover there's the fascination of new possibilities. With our twofold expertise we can provide you with trend-setting leading technology. From the spindle to robotics.

We call this "SCHUNK SYNERGY". Get to know us as your active "all-in-one" partner – all the services from one source to benefit you.

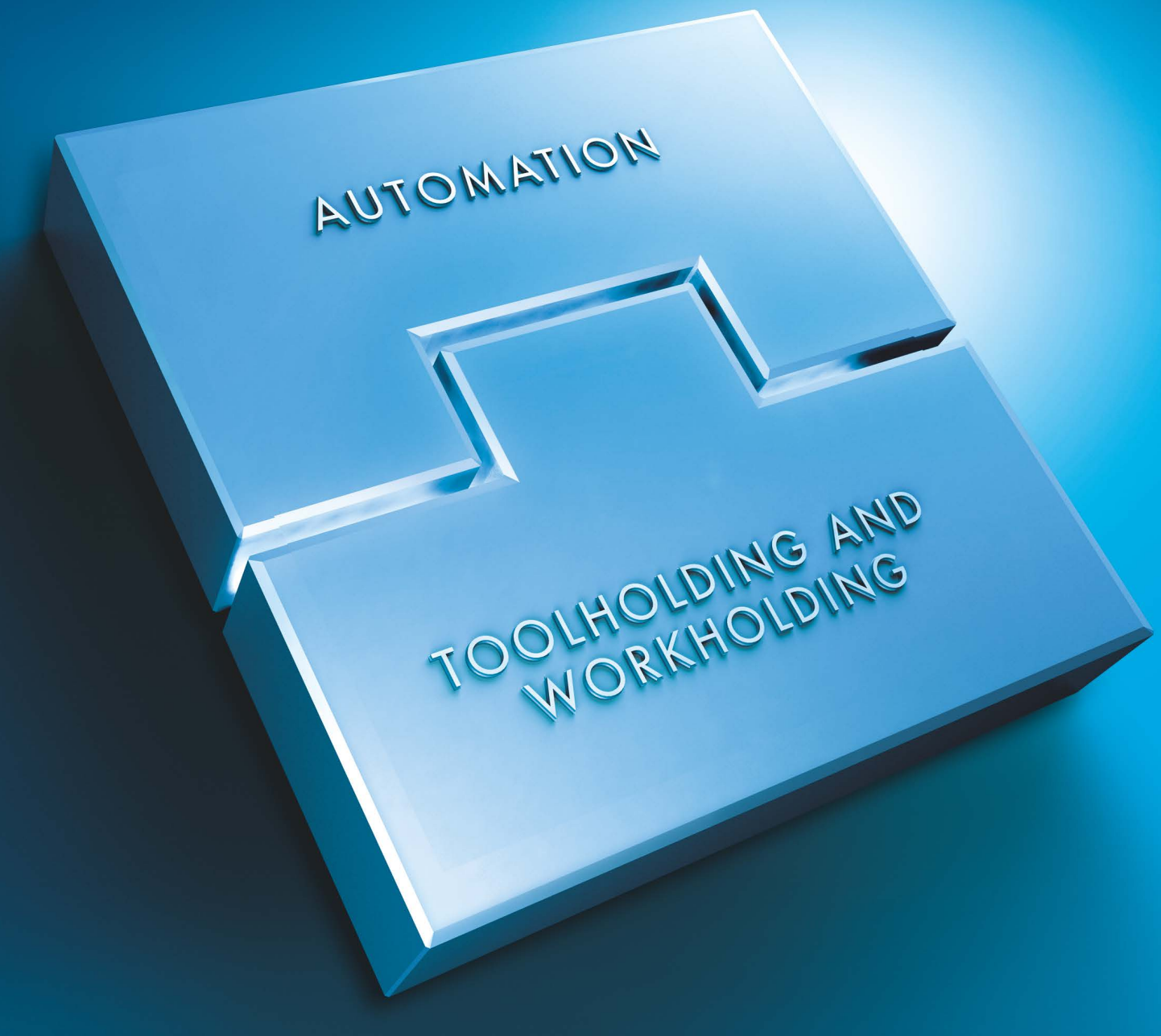

## More innovative for you!

**SCHUNK opens up new horizons**

Shaping technology. Putting the dynamics into processes. Increasing added value. SCHUNK is one of the world's leading manufacturers for clamping and gripping technology, and our name is synonymous with innovation.

We are a family-run business based in Lauffen Germany and a globally active company rolled into one. Continual dialog with our customers and the personal responsibility and individual endeavors of each and every employee to perform the work faultlessly and in the best quality produce solutions, which precisely conform to our customers' needs and the demanding requirements of the market.

SCHUNK opens up new horizons. For even today, we are focusing on the opportunities of tomorrow, and boast a comprehensive range of future-oriented technologies. Our promise: High-quality solutions that not only live up to your expectations, but exceed them! And on this premise, we have consistently based our corporate philosophy: Quality, reliability and pioneering spirit.

Through continuous development, we are constantly opening up new prospects for our customers. Technical creativity, supreme expertise and soundly based experience are the success factors we offer you in engineering, production and service.

We are thinking ahead – for you!

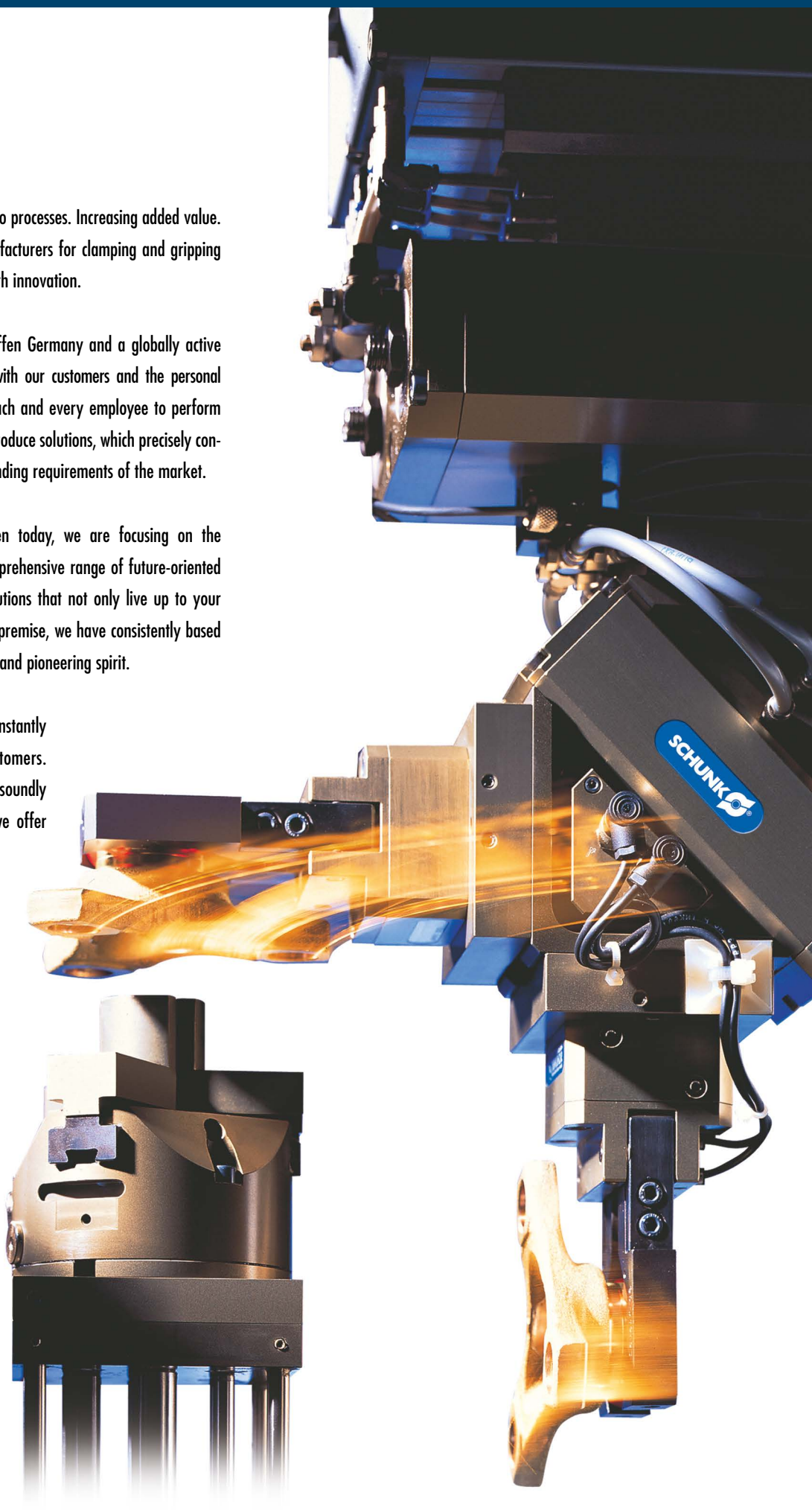

# Partners with a System Approach

## System partners

### Solutions from one source

As one of the most innovative market leaders, we offer unique solutions with our gripping systems, rotary units, linear modules, robot accessories and customized applications. Our broad product range enables us to offer precisely the right solution, even for your specialized tasks. We are development partners for various industries and specialize in your handling applications.

Whenever handling tasks require maximum precision and economic efficiency, SCHUNK provides the momentum and the perfect solution for putting them into practice.

You, too, can benefit from our complete automation range from one source. From standardized and individual gripper modules to complex functional modules. Rediscover SCHUNK! Again and again.



### Gripping Modules

SCHUNK currently has the most comprehensive range of universal grippers and gripper modules for small components. Pneumatic or electric. Offering all features from state-of-the-art materials and coatings employed as standard to internal media feed-through. With our high level of technical expertise, SCHUNK sets the trend for cost-efficient handling in any industry, in any field.



### Rotary Modules

Technology and functionality in the most compact form. SCHUNK's range of rotary modules represents the entire spectrum of compact turning and rotary units, swivel heads and rotary fingers. In other words, it's the ideal solution for handling tasks.



### Linear Modules

Precision mini-slides, pneumatic linear modules, rigid gantry axes and axes with servo-electric linear drive – the SCHUNK product range offers linear technology for high-speed automated assembly. Compact and designed as a modular system.



### Robot Accessories

Robot accessories from SCHUNK – the complete range of modules for perfect interplay between the robot arm and the tool. Suitable for all types of robot, it is also an ideal enhancement to flexible robot applications.



### Modular Assembly Automation

Flexible – fast – future-secure. This is the system GEMOTEC from SCHUNK. The comprehensive program of pneumatic and electric modules opens an unforeseen variety of combination possibilities. All actuators are compatible with each other. Where other companies still have to conduct design work, the system GEMOTEC is already assembled. Fast and straightforward.

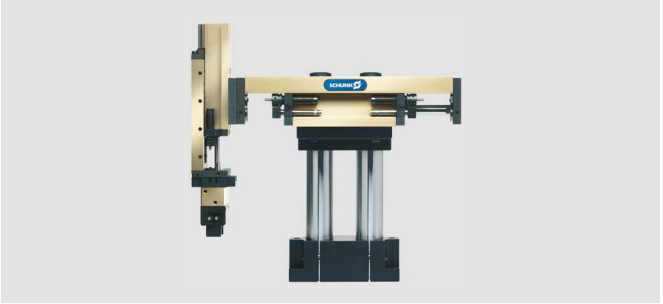

### Modular Robotics

The future, both in the service as well as in industrial robotics, has much greater demands on the mechanical design, the gripping technology, the sensor systems and the control and feedback control technology.
As a pioneer of the modular robotics SCHUNK focuses on the expansion of usable approaches for market-ready, economic, and everyday products for service robotics, industrial robotics and research.



# SCHUNK sets Standards

## Gripping Systems

**Quality, reliability, precision**

Our small component and universal gripping module program is extensive and is characterized by high product quality and many monitoring possibilities. The optimally graded sizes cover the complete spectrum of workpiece sizes. The requirement for this "Made in Germany" cutting edge technology is our continued innovative drive.

SCHUNK offers more. More willingness to take up challenges and make ideas a reality, more commitment to investment in innovative technologies, more flexibility to provide solutions for the tasks of a rapidly developing future. This is what we stand for.

For the benefit of our customers.

**Good reasons for choosing gripper modules from SCHUNK:**

- Simple set up
- High torque capacity
- Strong kinematics for long life
- High gripping force
- Large stroke ranges in relation to size
- Economic solutions and fast delivery times thanks to the modular design
- Pneumatic or electric

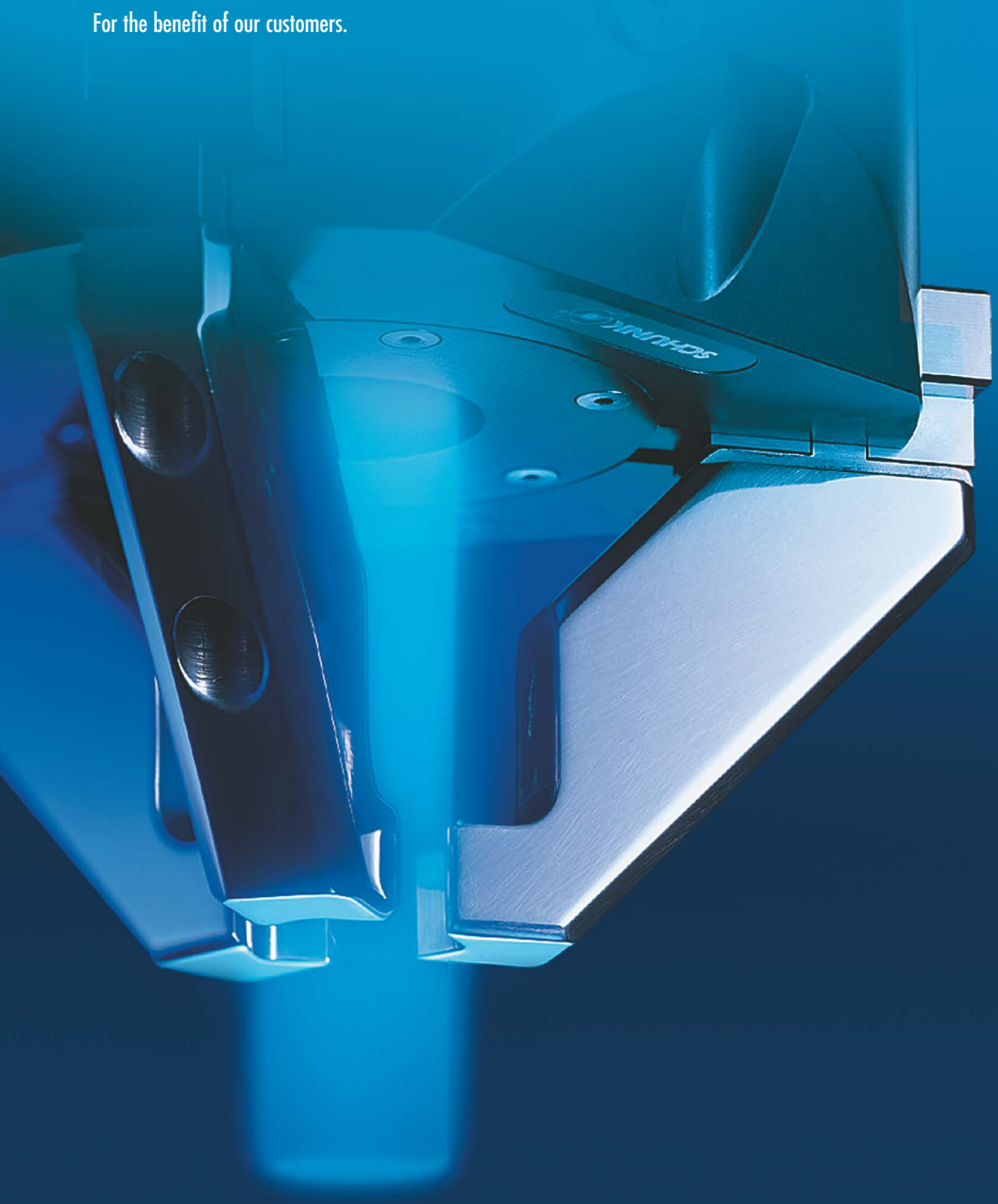

## PGN-plus – the most versatile of all-rounders

**The PGN-plus 2-finger parallel gripper, together with the PZN-plus 3-finger centric gripper, is undoubtedly the "best among its class" in the SCHUNK premium range of gripping modules. The first gripper with multi-tooth guidance. The first gripper with an oval piston drive concept. The first gripper with comprehensive accessories.**

PGN-plus represents efficiency and precision in handling. It sets the technological standards in gripping technology. The versatile options for special application cases, neatly stepped sizes and large gripping forces make it an ideal solution for all your applications. PGN-plus is the quintessence of the best, perfectly combined in one universal product range.

**Benefit from the leading expert in gripping technology:**

- Sturdy multi-tooth guidance for precise handling
- Significantly higher moments loads, making it possible to use longer gripper fingers
- Higher gripping forces provided by oval pistons
- Fastened on two sides of the gripper in three screwing directions for universal and flexible gripper assembly
- Hose-free direct connection or connection via screws for flexible pressure supply in all automation solutions
- Comprehensive sensor accessories for manifold monitoring possibilities, including stroke position control
- Compact dimensions for minimum interfering contours in handling
- Wide variety of options for optimization tailored to your specific application




## SUPERIOR!
## The SCHUNK multi-tooth guidance
## PGN-plus 2-Finger Parallel Gripper

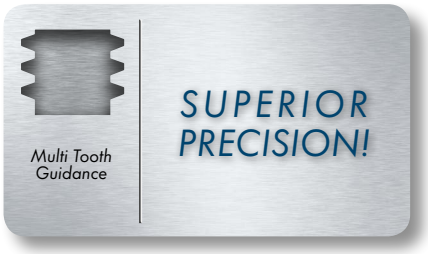

## The SCHUNK multi-tooth guidance

Spreading the load across many shoulders – that is the principle behind the multi-tooth guidance developed by SCHUNK. The guidance tasks in parallel and centric grippers are no longer carried out using the classical T-slot; now multiple prismatic guidance arranged in parallel do the job.

Your advantages: forces and moments are distributed across multiple guiding areas. As a result, the guidances have a higher load capacity.

The effect: you can use longer gripper fingers with the same gripper size, without overloading the guidance. The added guiding area reduces the surface pressure – and therefore wear – to a minimum. The multi-tooth guidance ensures minimal guidance play throughout the gripper's service life.

- Precise, process reliable handling
- Maximum gripping force
- Large moment and power absorption
- Trouble-free use of long gripper fingers
- Maximum service life

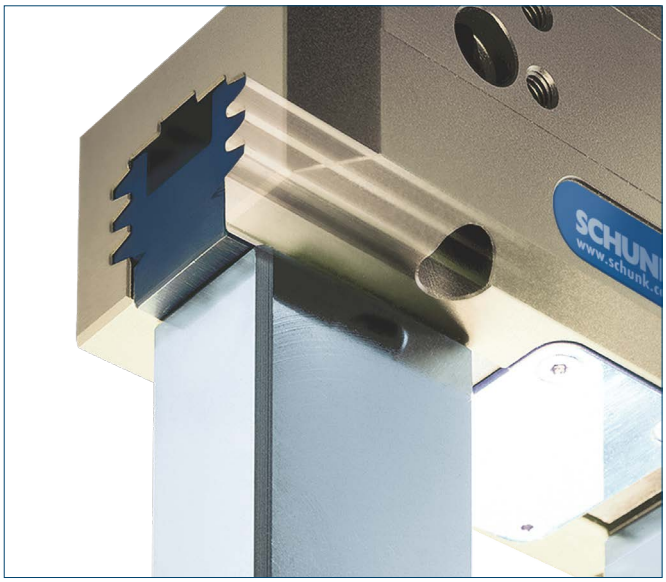

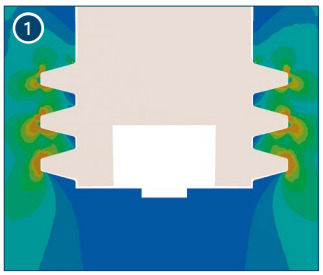


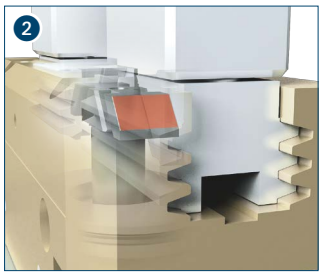


1 The load on the multi-tooth guidance is spread across many shoulders.
2 More power: The large space between the multi-tooth guidance allows for a particularly strong diagonal pull. This guarantees that the force of the powerful oval piston is exerted to the fullest extent while limiting wear and damage.

This total system has superior precision, strength and reliability.

## Premium gripper range with SCHUNK multi-tooth guidance

**PGN-plus**



2-finger
parallel gripper

**PZN-plus**



3-finger
centric gripper

**DPG-plus**



Sealed 2-finger
parallel gripper

**DPZ-plus**



Sealed 3-finger
centric gripper

**PGB**



2-finger
parallel gripper
with center bore

**PZB-plus**



3-finger
centric gripper
with center bore

**PZV**



4-finger
centric gripper

## Environment



### HUE dust cover

Soft plastic cover for long-lasting protection of grippers against fluids and dust.



### High-temperature version of dust cover

For reliable use in hot environments.



### Cleanroom

PGN-plus is certified to EN ISO 14644 cleanroom class ISO 5 as standard, with the HUE dust cover also available as standard for use in ISO 2 cleanrooms. All SCHUNK premium products are delivered with cleanroom certification.

### Dust protection version

For use in dusty environments. Completely dust-proof versions with increased protection against penetrating materials for total reliability.

### K corrosion-protected version

All steel parts are securely protected for use in corrosive environments.



### EX explosion protection version

All of SCHUNK's Premium products are also provided with ATEX certification as standard.

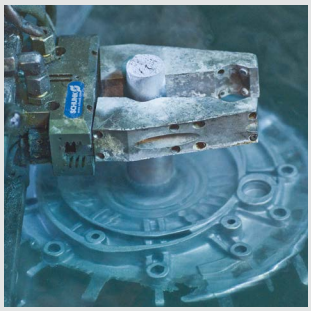

### V high-temperature version

For use in environments with high temperatures or aggressive fluids.

## Compatible with ...



### TCU compensation unit

The TCU can be moved in the X, Y and Z directions, thereby enabling it to correct angle errors and compensate rotation.



### Modular assembly automation

Versatile, standardized combinations of the modular design, e.g. multi-tooth guided gripper with linear units.

## Further options

### OD/ID gripping force safety device

The GKS mechanical gripping force safety device ensures that a minimum clamping force will be applied even if there is a drop of pressure. Besides this, the gripping force safety device can be used to increase gripping force or for single actuated gripping.

### KVZ increased force version

For increased gripping force requirements when opening and closing.

### P Precision version

Special modification of the high precision gripping module for absolute replacement accuracy when changing grippers.

## Machine tools



### Spindle interfaces

The spindle interfaces are available as standard to increase your productivity, particularly when it comes to automatic machine operation.



### Shank interface

GSW 20 gripper with shank interface for toolholders: loads and unloads machine tools fully automatically, using the centers' own machine axes.

**... and much more**

# SCHUNK sets Standards

## Superior gripper sensors

### Sensor systems



#### MMS-P programmable magnetic switch

With adjustable hysteresis. For monitoring two switching points.



#### MMS electronic magnetic switch

Fitted to the gripper's C-slot to monitor a switching point.



#### RMS reed switch

Mechanical magnetic switch. Fitted to the gripper's C-slot to monitor a switching point.

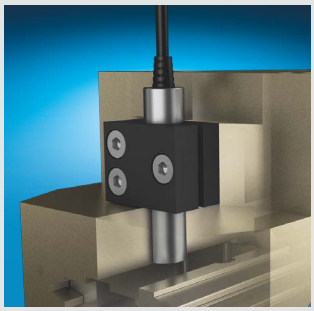

#### IN inductive proximity switch

For monitoring the current state of automation components.



#### FPS flexible position sensor

For monitoring up to 5 switching points.



#### APS analog position sensor

System consisting of sensors and electronics for precise recording of the gripper jaw position.

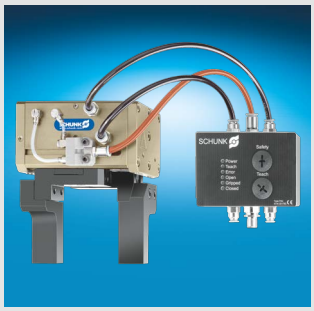

#### PA-3 pneumatic monitoring

Particularly resistant to contamination, can be used in explosive areas or in "wireless" applications.



#### RSS wireless monitoring system

Wireless sensor system for monitoring the signals and states of sensors and processes.



#### FMS force measuring system

For measuring the gripping forces during the gripping process or, for example, for checking process forces in the case of taught robot applications.

### Accessories



#### BSWS quick-change jaw system

Exchangeable gripper fingers enable quick refitting for handling other workpieces and minimize set-up times.



#### UZB universal intermediate jaw

Enables rapid adjustment of the stroke position, without tools, thanks to the grid system provided and the tool-free clamping device.



#### MV micro valves

Simple to integrate – fitted directly to the actuator. Benefit from the lowest possible energy consumption, short cycle times and the minimum of installation work.

**SDV-P pressure maintenance valve for safe gripping forces ... and much more**

## The best standardization options to keep you flexible

### Multi-tooth all-round solutions

SCHUNK provides superior quality multi-tooth guidance in a large portion of its products. In addition to standardized screw connection diagrams, SCHUNK's product range includes numerous product variants and a wide range of accessory components. We can therefore provide you with the right gripper for any type of application, whether that involves specific ambient effects such as temperature, contamination or aggressive media, or cleanroom or explosive ambient conditions. It goes without saying that our range of services also includes the appropriate sensor systems. Furthermore, we offer you many additional options for reducing idle times and maximizing the flexibility of your plants.

| | PGN-plus | PZN-plus | DPG-plus | DPZ-plus | PGB | PZB-plus | PZV |
|---|---|---|---|---|---|---|---|
| |  |  |  |  |  |  |  |
| GKS Gripping force safety device | ■ | ■ | ■ | ■ | ■ | ■ | |
| SD dust protection version | ■ | ■ | | | | | |
| K corrosion-protected version | ■ | | | | | | |
| V high-temperature version | ■ | ■ | ■ | ■ | ■ | ■ | ■ |
| KVZ increased force version | ■ | ■ | ■ | ■ | | | |
| P precision version | ■ | ■ | | | | | |
| EX explosion protection version | ■ | ■ | ■ | ■ | | | |
| MMS-P programmable magnetic switch | ■ | ■ | ■ | ■ | ■ | ■ | ■ |
| APS analog position sensor | ■ | ■ | | | ■ | ■ | ■ |
| FPS flexible position sensor | ■ | ■ | | | ■ | ■ | ■ |
| PA3 pneumatic monitoring | ■ | ■ | ■ | ■ | ■ | ■ | ■ |
| RMS reed switch | ■ | ■ | ■ | ■ | ■ | ■ | ■ |
| RSS radio sensor system | ■ | ■ | ■ | ■ | ■ | ■ | ■ |
| FMS force measuring system | ■ | ■ | | | ■ | ■ | ■ |
| IN inductive proximity switch | ■ | ■ | | | ■ | ■ | ■ |
| MMS magnetic switch | ■ | ■ | ■ | ■ | ■ | ■ | ■ |
| ABR, SBR finger blanks | ■ | ■ | | | ■ | ■ | ■ |
| HUE dust cover | ■ | ■ | | | | | |
| BSWS quick-change jaw system | ■ | ■ | | | ■ | ■ | ■ |
| UZB universal intermediate jaw | ■ | ■ | | | ■ | ■ | ■ |

# Pneumatic Gripping Modules

## Pneumatic • 2-Finger Parallel Gripper

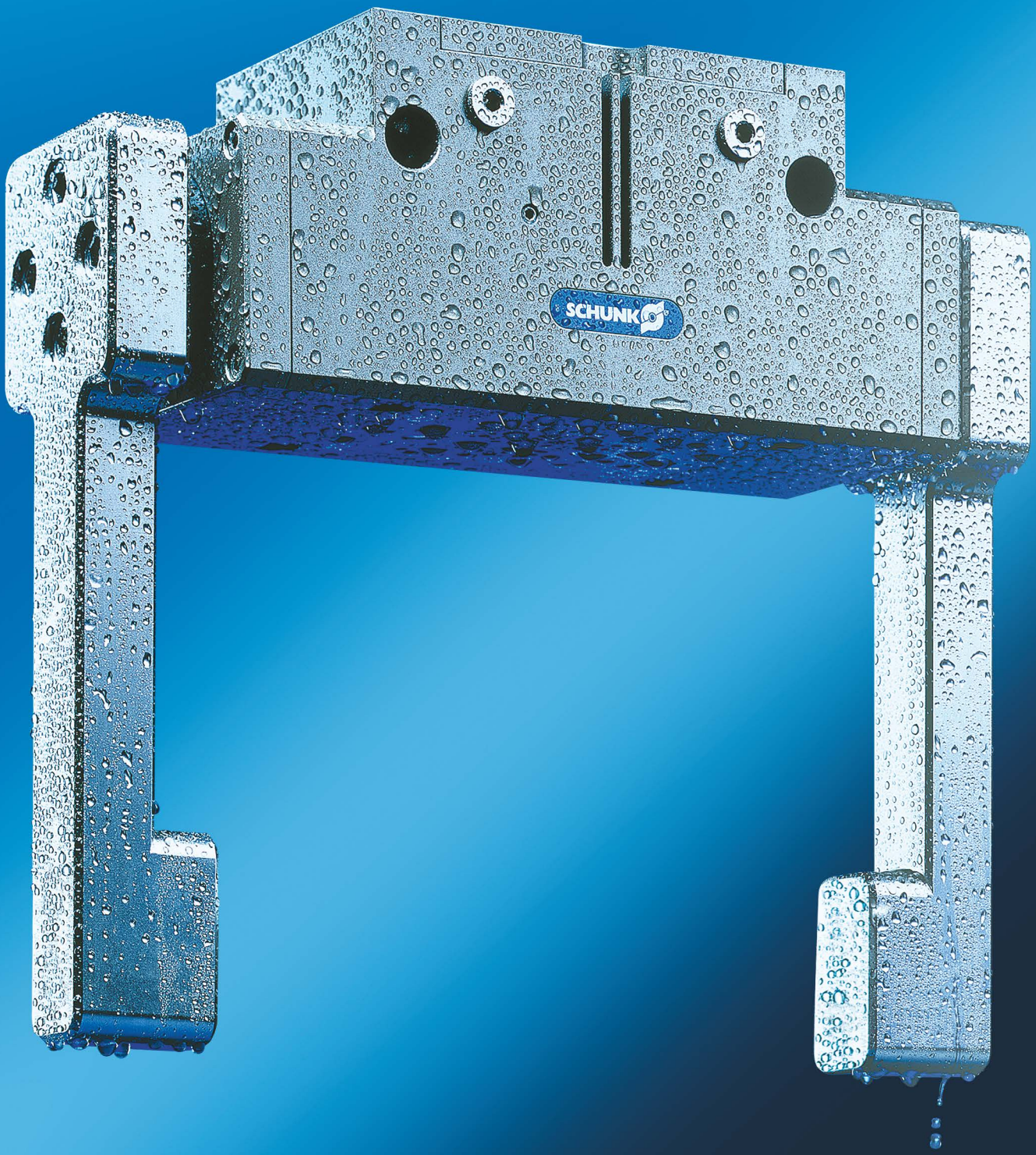

2-FINGER PARALLEL GRIPPER


| Series | Size | Page |
|---|---|---|
| **Gripper for small components** | | |
| MPG | | 22 |
| MPG | 10 | 26 |
| MPG | 12 | 30 |
| MPG | 16 | 34 |
| MPG | 20 | 38 |
| MPG | 25 | 42 |
| MPG | 32 | 48 |
| MPG | 40 | 54 |
| MPG | 50 | 60 |
| MPG | 64 | 66 |
| MPG | 80 | 72 |
| KTG | | 78 |
| KTG | 50 | 82 |
| KGG | | 86 |
| KGG | 60 | 90 |
| KGG | 70 | 96 |
| KGG | 80 | 102 |
| KGG | 100 | 108 |
| KGG | 140 | 114 |
| KGG | 220 | 120 |
| KGG | 280 | 124 |
| RH | | 128 |
| RH | 901K | 132 |
| RH | 901K-ST10 | 134 |
| RH | 905 | 136 |
| RH | 907 | 138 |
| RH | 925 | 142 |
| RH | 940 | 146 |
| RH | 9010 | 150 |
| RH | 918 | 154 |
| RH | 806 KP | 158 |
| RH | 801 KP | 160 |
| **Universal Gripper** | | |
| LGP | | 162 |
| LGP | 8 | 166 |
| LGP | 10 | 170 |
| LGP | 16 | 172 |
| LGP | 20 | 174 |
| LGP | 25 | 176 |
| LGP | 40 | 178 |

| Series | Size | Page |
|---|---|---|
| **Universal Gripper** | | |
| PGN-plus | | 180 |
| PGN-plus | 40 | 184 |
| PGN-plus | 50 | 190 |
| PGN-plus | 64 | 198 |
| PGN-plus | 80 | 208 |
| PGN-plus | 100 | 218 |
| PGN-plus | 125 | 228 |
| PGN-plus | 160 | 238 |
| PGN-plus | 200 | 248 |
| PGN-plus | 240 | 258 |
| PGN-plus | 300 | 266 |
| PGN-plus | 380 | 274 |
| JGP | | 280 |
| JGP | 40 | 284 |
| JGP | 50 | 290 |
| JGP | 64 | 298 |
| JGP | 80 | 308 |
| JGP | 100 | 318 |
| JGP | 125 | 328 |
| JGP | 160 | 338 |
| PGF | | 346 |
| PGF | 50 | 350 |
| PGF | 64 | 354 |
| PGF | 80 | 358 |
| PGF | 100 | 362 |
| PGF | 125 | 366 |
| PGM | | 370 |
| PGM | 29 | 374 |
| PGM | 38 | 378 |
| PGM | 50 | 382 |
| PGM | 60 | 386 |
| PGM | 82 | 390 |
| PGM | 96 | 394 |
| PGM | 120 | 398 |
| PGM | 140 | 402 |
| PGB | | 406 |
| PGB | 64 | 410 |
| PGB | 80 | 416 |
| PGB | 100 | 424 |
| PGB | 125 | 432 |

| Series | Size | Page |
|---|---|---|
| **Sealed Gripper** | | |
| DPG-plus | | 440 |
| DPG-plus | 40 | 444 |
| DPG-plus | 50 | 450 |
| DPG-plus | 64 | 456 |
| DPG-plus | 80 | 462 |
| DPG-plus | 100 | 468 |
| DPG-plus | 125 | 474 |
| DPG-plus | 160 | 480 |
| DPG-plus | 200 | 486 |
| **Long-stroke Gripper** | | |
| PFH 30 .. 50 | | 490 |
| PFH | 30 | 494 |
| PFH | 40 | 498 |
| PFH | 50 | 502 |
| PFH 150 .. 300 | | 506 |
| PFH | 150 | 510 |
| PFH | 200 | 514 |
| PFH | 250 | 518 |
| PFH | 300 | 522 |
| PSH | | 526 |
| PSH | 22 | 530 |
| PSH | 32 | 536 |
| PSH | 42 | 542 |
| PSH | 52 | 548 |
| **Heavy-load Gripper** | | |
| SPG | | 552 |
| SPG | 100 | 556 |

# MPG

**Pneumatic • 2-Finger Parallel Gripper • Gripper for small components**

**Sizes**
10 ... 80

**Weight**
0.01 kg ... 1.35 kg

**Gripping force**
9 N ... 540 N

**Stroke per finger**
1 mm ... 14 mm

**Workpiece weight**
0.05 kg ... 1.9 kg

## Application example

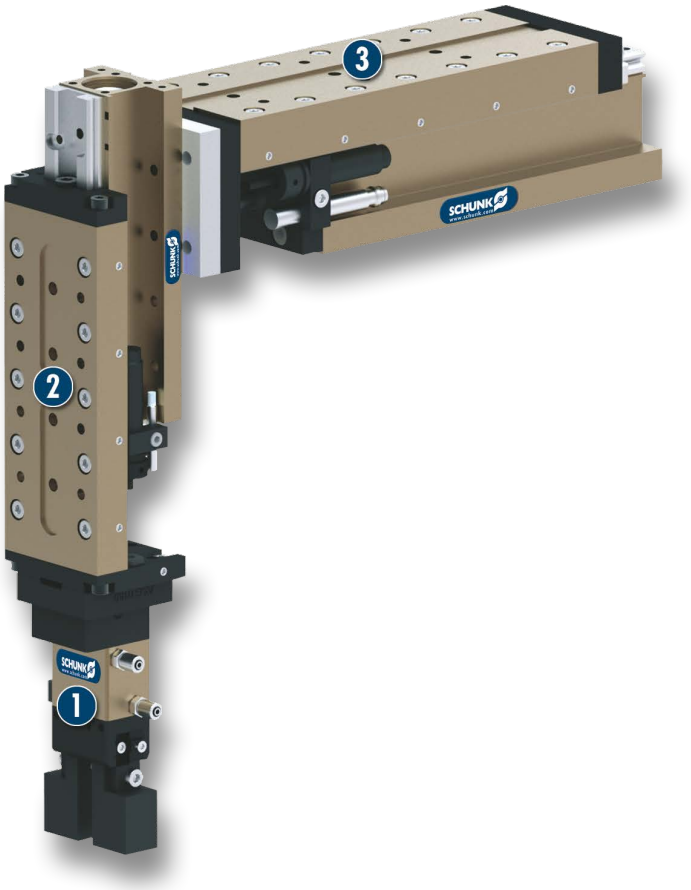


**Pneumatically driven, dual-axis pick-and-place machine for small components**

1. MPG 2-Finger Parallel Gripper with standard finger blanks
2. FST-S Mini-slide for vertical movement
3. FST-S Mini-slide for horizontal movement

## Gripper for small components

2-Finger Parallel Gripper with smooth running base jaws guided on roller bearings

## Field of application

Gripping and moving of small to medium-sized workpieces in clean environments, such as assembly, testing, laboratory and pharmaceutical industry

## Your advantages and benefits

**Roller guide**
for precise gripping through base jaw guidance with minimum play

**Base jaws guided on double roller bearings**
ensuring low friction and smooth running actuation

**Mounting from two sides in three screw directions possible**
for universal and flexible gripper assembly

**Air supply via hose-free direct connection or screw connections**
for the flexible supply of compressed air in all automation systems




## General note to the series

**Principle of function**
Wedge-hook kinematics

**Housing material**
Aluminum alloy, hard-anodized

**Cover material**
Steel

**Base jaw material**
Steel

**Actuation**
pneumatic, with filtered compressed air (10 microns): dry, lubricated or non-lubricated
Pressure medium: Required quality class of compressed air according to DIN ISO 8573-1: 6 4 4

**Warranty**
24 months (details, general terms and conditions and operation manuals can be downloaded under www.schunk.com)

**Scope of delivery**
Brackets for proximity switches, centering sleeves, O-rings for direct connection, assembly and operating manual with manufacturer's declaration

**Gripping force maintenance device**
with either mechanical gripping force maintenance or SDV-P pressure maintenance valve

## Sectional diagram

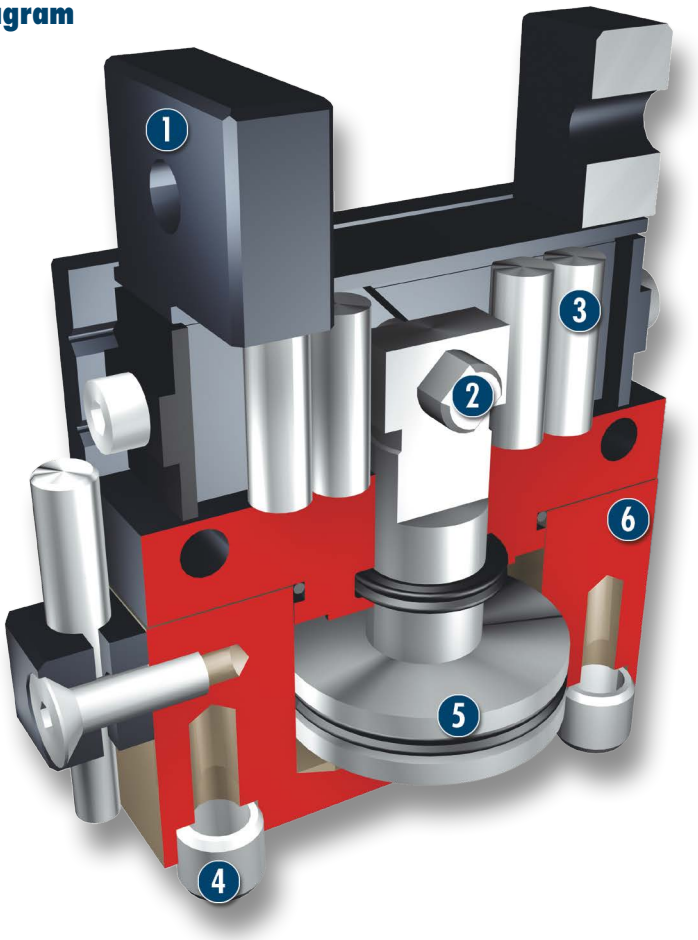


1 **Base jaw**
for the connection of workpiece-specific gripper fingers

2 **Wedge-hook design**
for high power transmission and centric gripping

3 **Roller guide**
precise gripping through base jaw guide with minimum play

4 **Centering and mounting possibilities**
for assembly of the gripper to a base area and at the long side

5 **Drive**
double-acting piston drive system

6 **Housing**
weight-optimized through application of hard-anodized, high-strength aluminum alloy

## Functional description

The piston is moved up and down by compressed air.
The side hooks at the upper end of the piston rod guide in the angular slots of both base jaws, and thus transform this movement into the synchronized opening or closing of the base fingers.

## Options and special information

### Additional mounting bores

for centering the fingers via sleeves, instead of normal mounting surfaces. Special versions on request.

## Accessories

Accessories from SCHUNK – the suitable supplement for maximum functionality, reliability and performance of all automation modules.

### Centering sleeves



### Fittings



### Sensor system



### Sensor cables



### Carbide clamping inserts






### Sensor Distributor

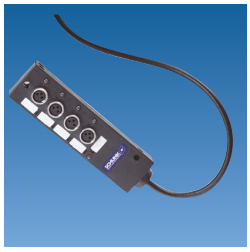

### Plastic inserts



### Flexible Position Sensor

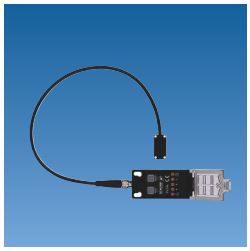

### Gripper pads

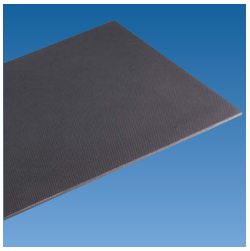

### Pressure maintenance valve



### Switching valve



### Finger blanks



ⓘ For the exact size of the required accessories, availability of this size and the designation and ID, please refer to the additional views at the end of the size in question. You will find more detailed information on our accessory range in the “Accessories” catalog section.

## General note to the series

**Gripping force**
is the arithmetic total of the gripping force applied to each finger at distance P (see illustration) measured from the upper edge of the gripper.

**Finger length**
The finger length is measured from the upper edge of the gripper housing in the direction of the main axis.

**Repeat accuracy**
is defined as the spread of the limit position after 100 consecutive strokes.

**Workpiece weight**
The recommended workpiece weight is calculated for a force-type connection with a coefficient of friction of 0.1 and a safety factor of 2 against slippage of the workpiece on acceleration due to gravity g. Considerably heavier workpiece weights are permitted with form-fit gripping.

**Closing and opening times**
Closing and opening times are purely the times that the base jaws or fingers are in motion. Valve switching times, hose filling times or PLC reaction times are not included in the above times and must be taken into consideration when determining cycle times.

# MPG 10

**Pneumatic • 2-Finger Parallel Gripper • Gripper for small components**




## Gripping force, I.D. gripping

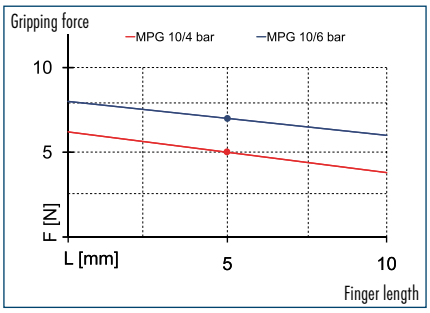


## Gripping force, O.D. gripping

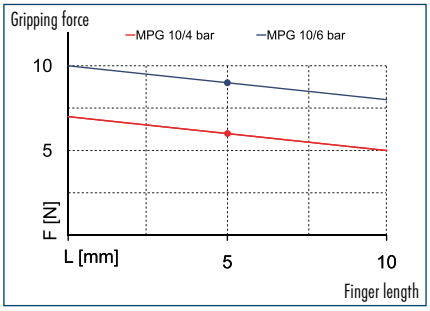


## Finger load

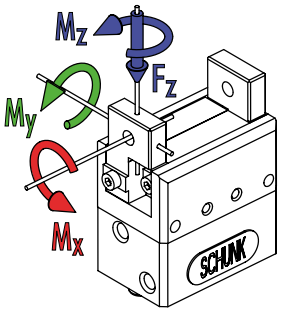


- $M_x$ max. 0.20 Nm
- $M_y$ max. 0.20 Nm
- $M_z$ max. 0.20 Nm
- $F_z$ max. 15.0 N

ⓘ The indicated moments and forces are static values, apply per base jaw and may occur simultaneously. $M_y$ may arise in addition to the moment generated by the gripping force itself. If the max. permitted finger weight is exceeded, it is imperative to throttle the air pressure so that the jaw movement occurs without any hitting or bouncing. Service life may be reduced.

## Technical data

| Description | | MPG 10 |
|---|---|---|
| ID | | 0340006 |
| Stroke per finger | [mm] | 1 |
| Closing force | [N] | 9 |
| Opening force | [N] | 7 |
| Weight | [kg] | 0.01 |
| Recommended workpiece weight | [kg] | 0.05 |
| Air consumption per double stroke | [cm³] | 0.15 |
| Min./max. operating pressure | [bar] | 3/6 |
| Nominal operating pressure | [bar] | 6 |
| Closing/opening time | [s] | 0.01/0.01 |
| Max. permitted finger length | [mm] | 10 |
| Max. permitted weight per finger | [kg] | 0.01 |
| IP class | | 30 |
| Min./max. ambient temperature | [°C] | -10/90 |
| Repeat accuracy | [mm] | 0.02 |
| Cleanroom class ISO-classification 14644-1 | | 5 |

## Main view

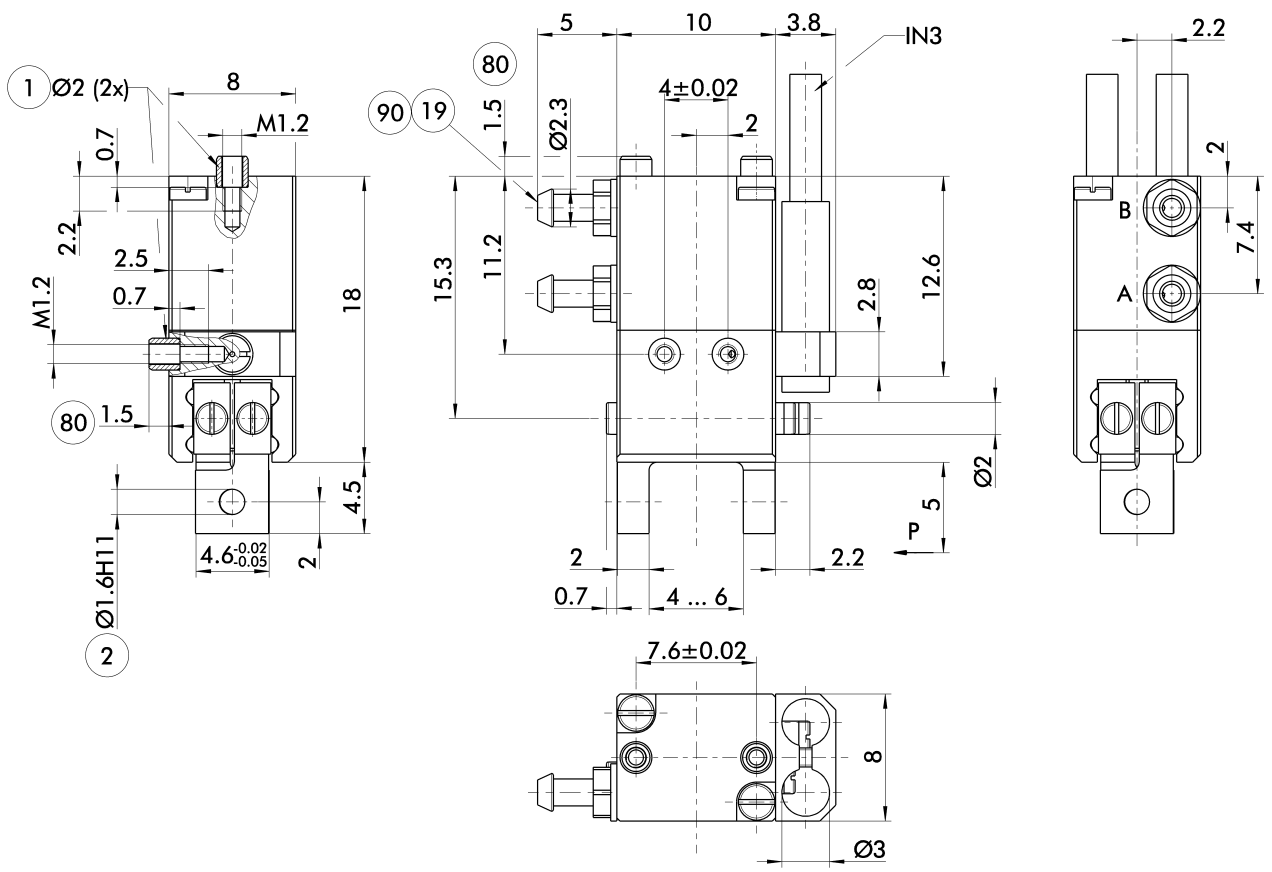


The drawing shows the gripper in the basic version with closed jaws, the dimensions do not include the options described below.

ⓘ The SDV-P pressure maintenance valve can be used as a gripping force maintenance device (see "Accessories" catalog section).

A, a Main/direct connection, gripper opening
B, b Main/direct connection, gripper closing
① Gripper connection
② Finger connection
⑲ Air connection
⑧⓪ Depth of the centering sleeve hole in the matching part
⑨⓪ Polyurethane hoses with an I.D. of 1.6 mm. Source: AC Aircontrols GmbH, Kempen, Germany

## Inductive proximity switches

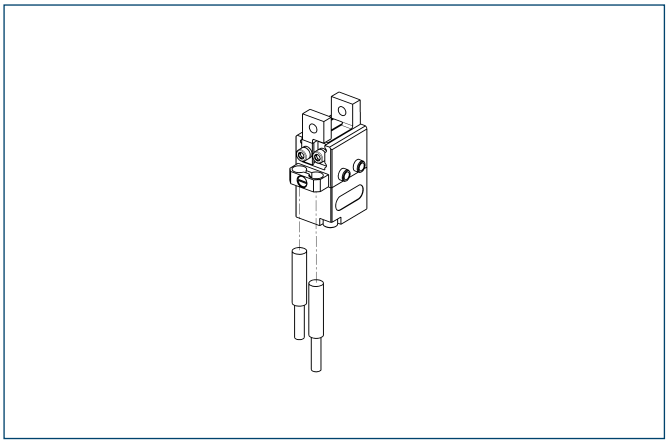

End position monitoring for direct mounting

| Description | ID | Recommended product |
|---|---|---|
| Inductive proximity switches | | |
| IN 3-S-M8-PNP | **0301466** | • |
| Connection cables | | |
| KA BG08-L 3P-0300-PNP | **0301622** | |
| KA BG08-L 3P-0500-PNP | **0301623** | |
| KA BW08-L 3P-0300-PNP | **0301594** | |
| KA BW08-L 3P-0500-PNP | **0301502** | |
| Cable extensions | | |
| KV BW08-SG08 3P-0030-PNP | **0301495** | |
| KV BW08-SG08 3P-0100-PNP | **0301496** | |
| KV BW08-SG08 3P-0200-PNP | **0301497** | |

ⓘ Two sensors (closer/NO) are required for each gripper, plus extension cables as an option.

ⓘ Please note the minimum permitted bending radii for the sensor cables, which are generally 35 mm.

You can find more detailed information and individual parts of the above-mentioned accessories in the “Accessories” catalog section.

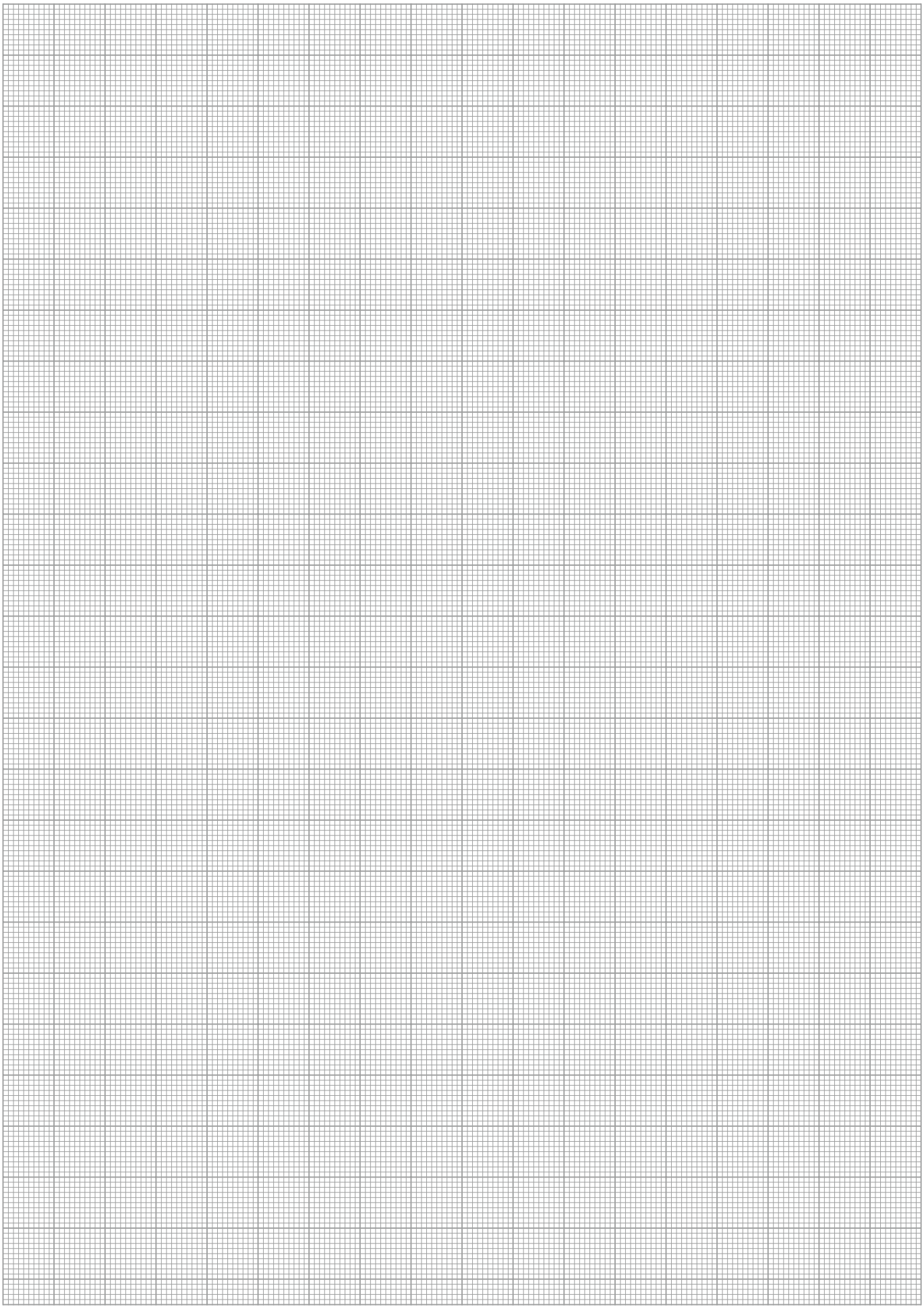

# MPG 12

**Pneumatic • 2-Finger Parallel Gripper • Gripper for small components**




## Gripping force, I.D. gripping

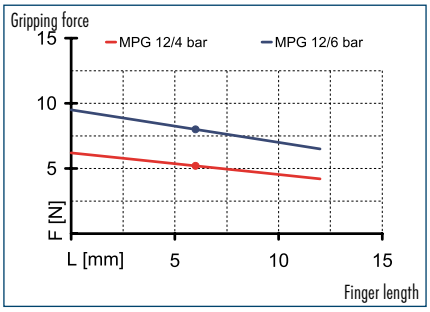


## Gripping force, O.D. gripping

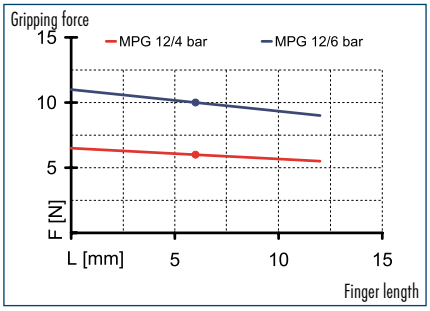


## Finger load

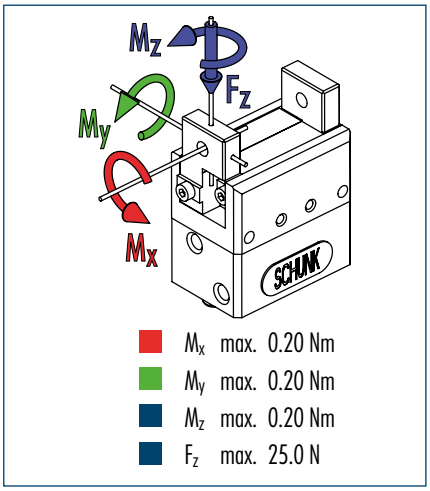


ⓘ The indicated moments and forces are static values, apply per base jaw and may occur simultaneously. $M_y$ may arise in addition to the moment generated by the gripping force itself. If the max. permitted finger weight is exceeded, it is imperative to throttle the air pressure so that the jaw movement occurs without any hitting or bouncing. Service life may be reduced.

## Technical data

| Description | | MPG 12 |
|---|---|---|
| ID | | 0340007 |
| Stroke per finger | [mm] | 1.2 |
| Closing force | [N] | 10 |
| Opening force | [N] | 8 |
| Weight | [kg] | 0.01 |
| Recommended workpiece weight | [kg] | 0.05 |
| Air consumption per double stroke | [cm³] | 0.2 |
| Min./max. operating pressure | [bar] | 3/6 |
| Nominal operating pressure | [bar] | 6 |
| Closing/opening time | [s] | 0.01/0.01 |
| Max. permitted finger length | [mm] | 12 |
| Max. permitted weight per finger | [kg] | 0.01 |
| IP class | | 30 |
| Min./max. ambient temperature | [°C] | -10/90 |
| Repeat accuracy | [mm] | 0.02 |
| Cleanroom class ISO-classification 14644-1 | | 5 |

## Main view

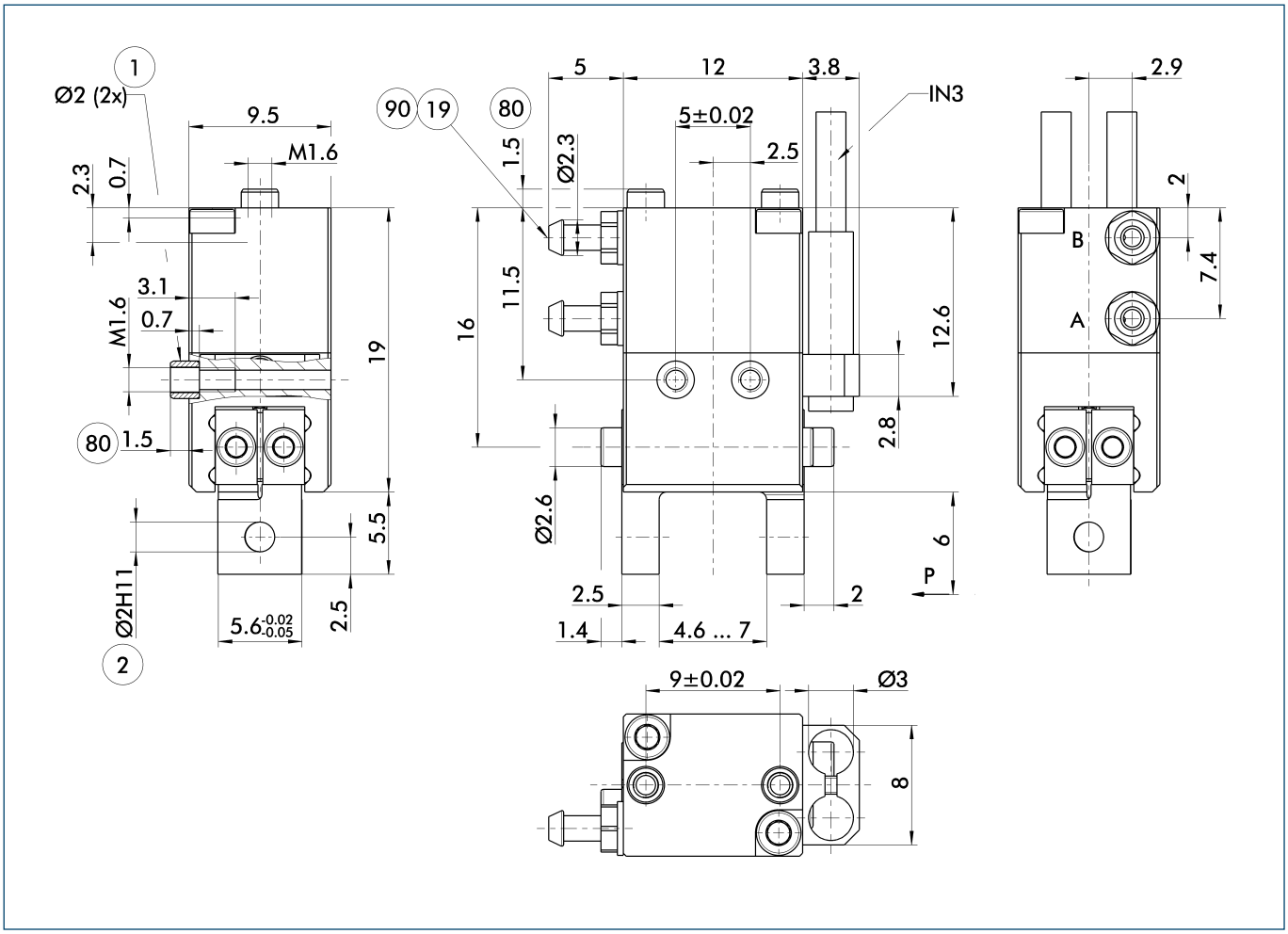


The drawing shows the gripper in the basic version with opened jaws without considering the dimensions of the described options below.

ⓘ The SDV-P pressure maintenance valve can be used as a gripping force maintenance device (see "Accessories" catalog section).

A, a Main/direct connection, gripper opening
B, b Main/direct connection, gripper closing
① Gripper connection
② Finger connection
⑲ Air connection
⑧⓪ Depth of the centering sleeve hole in the matching part
⑨⓪ Polyurethane hoses with an I.D. of 1.6 mm. Source: AC Aircontrols GmbH, Kempen, Germany

## Inductive proximity switches

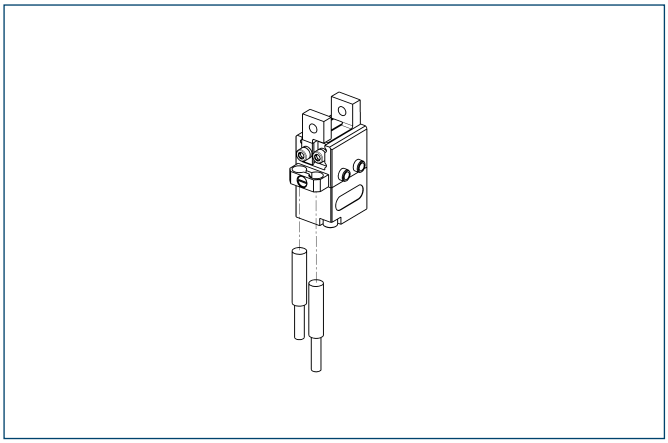

End position monitoring for direct mounting

| Description | ID | Recommended product |
|---|---|---|
| Inductive proximity switches | | |
| IN 3-S-M8-PNP | **0301466** | • |
| Connection cables | | |
| KA BG08-L 3P-0300-PNP | **0301622** | |
| KA BG08-L 3P-0500-PNP | **0301623** | |
| KA BW08-L 3P-0300-PNP | **0301594** | |
| KA BW08-L 3P-0500-PNP | **0301502** | |
| Cable extensions | | |
| KV BW08-SG08 3P-0030-PNP | **0301495** | |
| KV BW08-SG08 3P-0100-PNP | **0301496** | |
| KV BW08-SG08 3P-0200-PNP | **0301497** | |

ⓘ Two sensors (closer/NO) are required for each gripper, plus extension cables as an option.

ⓘ Please note the minimum permitted bending radii for the sensor cables, which are generally 35 mm.

You can find more detailed information and individual parts of the above-mentioned accessories in the “Accessories” catalog section.

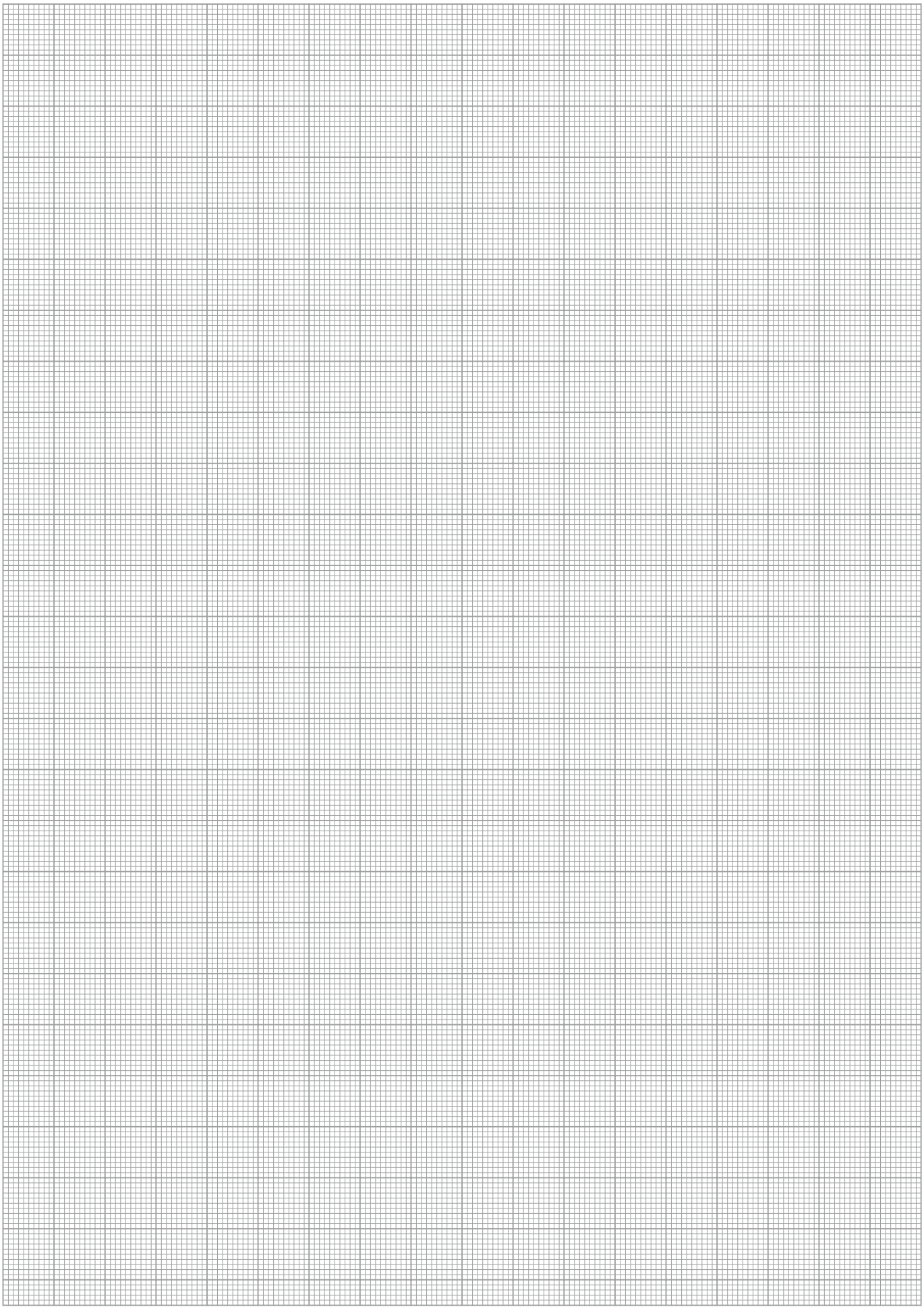

# MPG 16

**Pneumatic • 2-Finger Parallel Gripper • Gripper for small components**

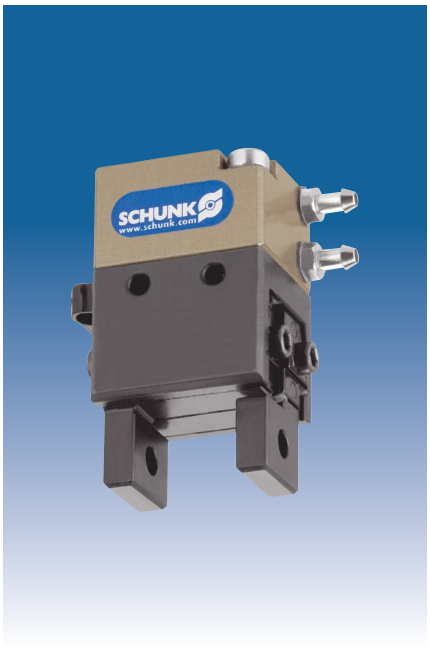


## Gripping force, I.D. gripping

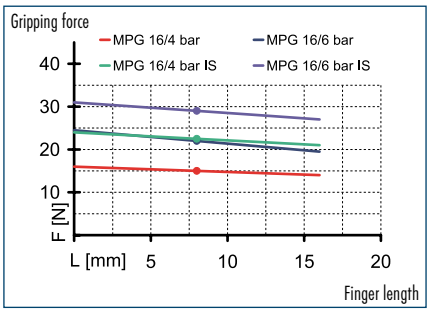


## Gripping force, O.D. gripping

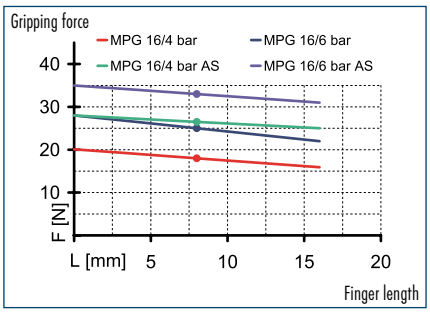


## Finger load

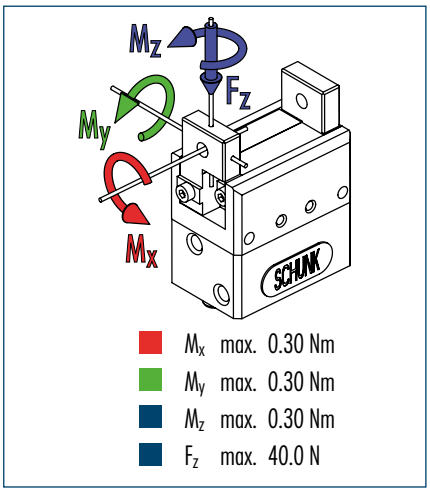


ⓘ The indicated moments and forces are static values, apply per base jaw and may occur simultaneously. $M_y$ may arise in addition to the moment generated by the gripping force itself. If the max. permitted finger weight is exceeded, it is imperative to throttle the air pressure so that the jaw movement occurs without any hitting or bouncing. Service life may be reduced.

## Technical data

| Description | | MPG 16 | MPG 16-AS | MPG 16-IS |
|---|---|---|---|---|
| **ID** | | **0340008** | **0340038** | **0340058** |
| Stroke per finger | [mm] | 1.5 | 1.5 | 1.5 |
| Closing force | [N] | 25 | 33 | |
| Opening force | [N] | 22 | | 29 |
| Min. spring force | [N] | | 8 | 7 |
| Weight | [kg] | 0.03 | 0.03 | 0.03 |
| Recommended workpiece weight | [kg] | 0.13 | 0.13 | 0.13 |
| Air consumption per double stroke | [cm³] | 0.35 | 0.82 | 0.71 |
| Min./max. operating pressure | [bar] | 2/8 | 4/6.5 | 4/6.5 |
| Nominal operating pressure | [bar] | 6 | 6 | 6 |
| Closing/opening time | [s] | 0.01/0.01 | 0.01/0.025 | 0.025/0.01 |
| Max. permitted finger length | [mm] | 16 | 16 | 16 |
| Max. permitted weight per finger | [kg] | 0.01 | 0.01 | 0.01 |
| IP class | | 30 | 30 | 30 |
| Min./max. ambient temperature | [°C] | -10/90 | -10/90 | -10/90 |
| Repeat accuracy | [mm] | 0.02 | 0.02 | 0.02 |
| Cleanroom class ISO-classification 14644-1 | | 5 | 5 | 5 |

## Main view

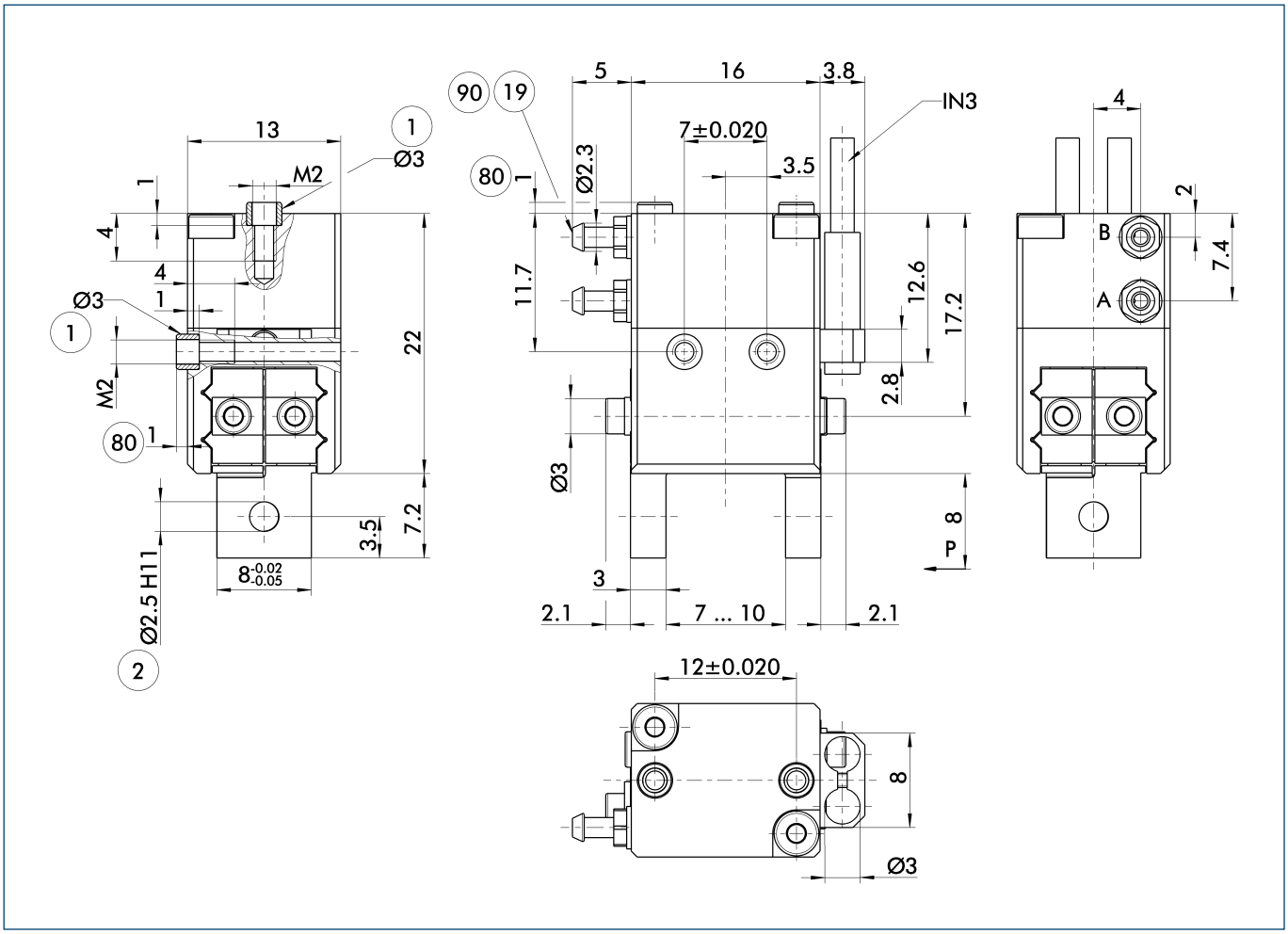


The drawing shows the gripper in the basic version with closed jaws, the dimensions do not include the options described below.

ⓘ The SDV-P pressure maintenance valve can also be used for I.D. or O.D. gripping alternatively or in addition to the spring-loaded, mechanical gripping force maintenance device (see "Accessories" catalog section).

A, a Main/direct connection, gripper opening
B, b Main/direct connection, gripper closing
(1) Gripper connection
(2) Finger connection
(19) Air connection
(80) Depth of the centering sleeve hole in the matching part
(90) Polyurethane hoses with an I.D. of 1.6 mm. Source: AC Aircontrols GmbH, Kempen, Germany

## AS/IS gripping force maintenance device

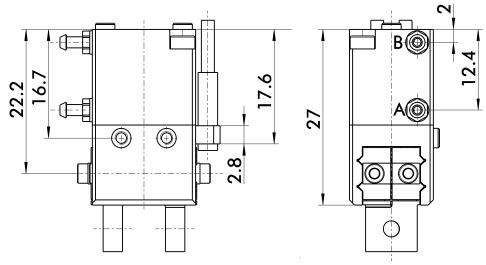


The mechanical gripping force maintenance device ensures a minimum gripping force even in case of pressure drop. This acts as closing force in the AS version, and as opening force in the IS version. In addition, the gripping force maintenance device can also be used for increasing the gripping force or for single-acting gripping.

## Modular Assembly Automation

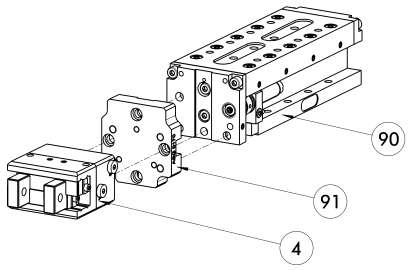


(4) Gripper
(90) CLM
(91) ASG

This gripper can be combined with the standard linear modules LM, KLM, CLM and ELM of the GEMOTEC modular system. For more information see our main catalog "Modular Assembly Automation".

## Inductive proximity switches

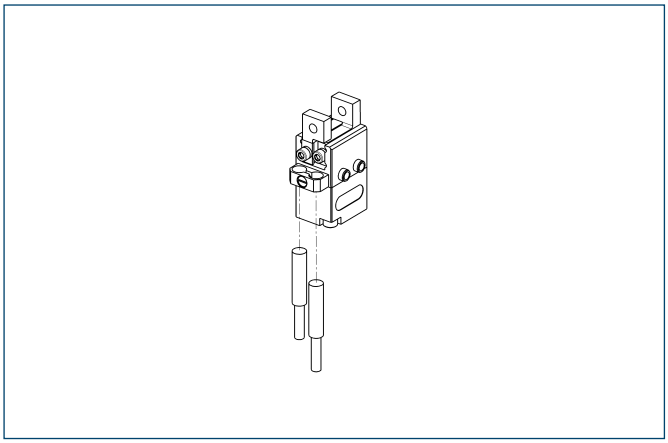

End position monitoring for direct mounting

| Description | ID | Recommended product |
|---|---|---|
| Inductive proximity switches | | |
| IN 3-S-M8-PNP | **0301466** | • |
| Connection cables | | |
| KA BG08-L 3P-0300-PNP | **0301622** | |
| KA BG08-L 3P-0500-PNP | **0301623** | |
| KA BW08-L 3P-0300-PNP | **0301594** | |
| KA BW08-L 3P-0500-PNP | **0301502** | |
| Cable extensions | | |
| KV BW08-SG08 3P-0030-PNP | **0301495** | |
| KV BW08-SG08 3P-0100-PNP | **0301496** | |
| KV BW08-SG08 3P-0200-PNP | **0301497** | |

ⓘ Two sensors (closer/NO) are required for each gripper, plus extension cables as an option.

ⓘ Please note the minimum permitted bending radii for the sensor cables, which are generally 35 mm.

You can find more detailed information and individual parts of the above-mentioned accessories in the “Accessories” catalog section.

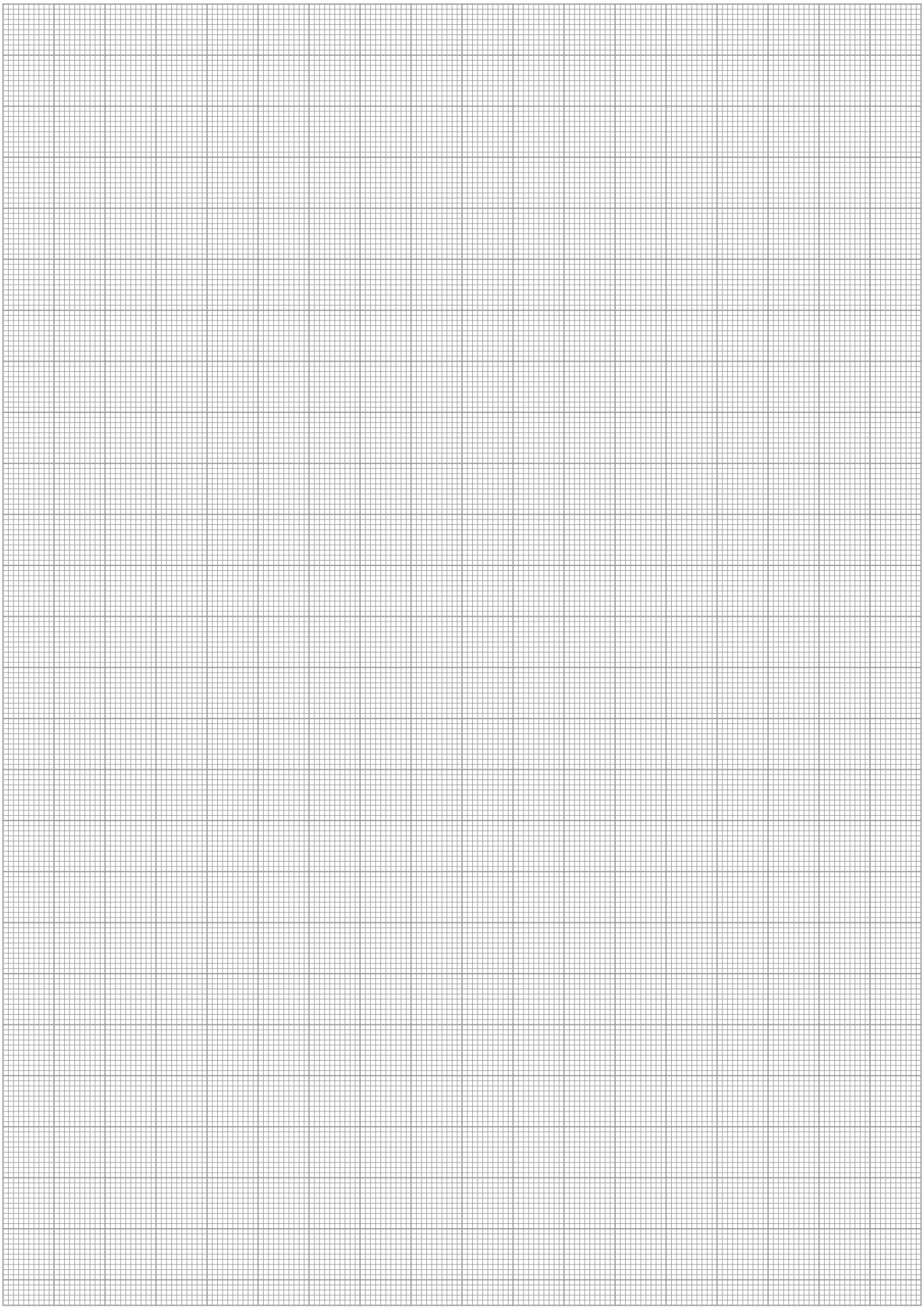

# MPG 20

**Pneumatic • 2-Finger Parallel Gripper • Gripper for small components**




## Gripping force, I.D. gripping

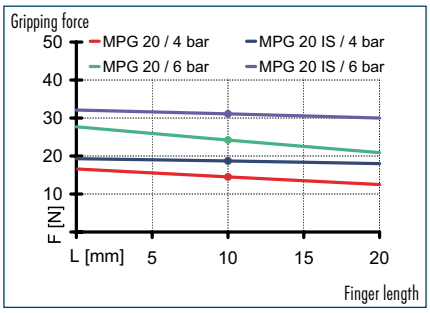


## Gripping force, O.D. gripping

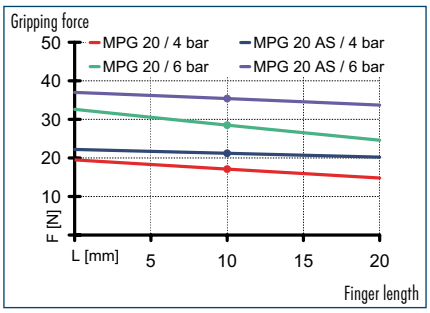


## Finger load

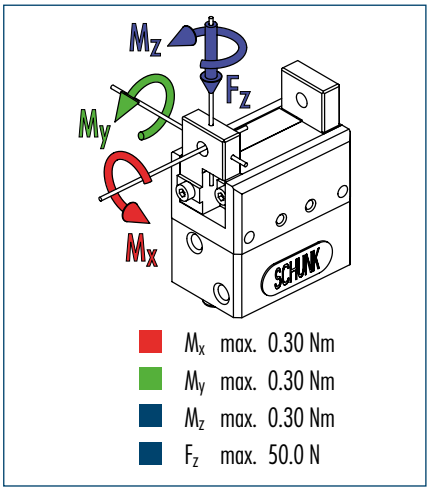


ⓘ The indicated moments and forces are static values, apply per base jaw and may occur simultaneously. $M_y$ may arise in addition to the moment generated by the gripping force itself. If the max. permitted finger weight is exceeded, it is imperative to throttle the air pressure so that the jaw movement occurs without any hitting or bouncing. Service life may be reduced.

## Technical data

| Description | | MPG 20 | MPG 20-FPS | MPG 20-AS | MPG 20-IS |
|---|---|---|---|---|---|
| ID | | 0340009 | 0340069 | 0340039 | 0340059 |
| Stroke per finger | [mm] | 2 | 2 | 2 | 2 |
| Closing force | [N] | 28 | 28 | 36 | |
| Opening force | [N] | 24 | 24 | | 31 |
| Min. spring force | [N] | | | 8 | 7 |
| Weight | [kg] | 0.04 | 0.05 | 0.05 | 0.05 |
| Recommended workpiece weight | [kg] | 0.14 | 0.14 | 0.14 | 0.14 |
| Air consumption per double stroke | [cm³] | 0.6 | 0.62 | 1.35 | 1.07 |
| Min./max. operating pressure | [bar] | 2/8 | 2/8 | 4/6.5 | 4/6.5 |
| Nominal operating pressure | [bar] | 6 | 6 | 6 | 6 |
| Closing/opening time | [s] | 0.015/0.015 | 0.015/0.015 | 0.02/0.03 | 0.03/0.02 |
| Max. permitted finger length | [mm] | 20 | 20 | 20 | 20 |
| Max. permitted weight per finger | [kg] | 0.01 | 0.01 | 0.01 | 0.01 |
| IP class | | 30 | 30 | 30 | 30 |
| Min./max. ambient temperature | [°C] | -10/90 | -10/90 | -10/90 | -10/90 |
| Repeat accuracy | [mm] | 0.02 | 0.02 | 0.02 | 0.02 |
| Cleanroom class ISO-classification 14644-1 | | 5 | 5 | 5 | 5 |

## Main view

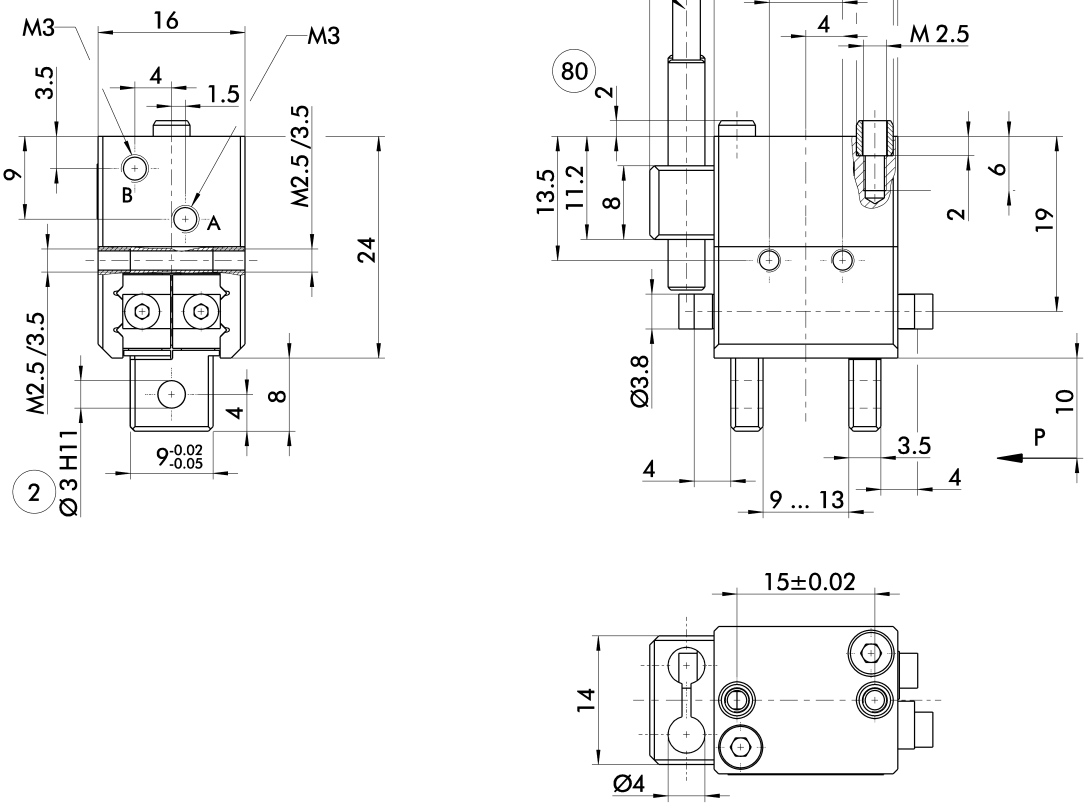


The drawing shows the gripper in the basic version with closed jaws, the dimensions do not include the options described below.

ⓘ The SDV-P pressure maintenance valve can also be used for I.D. or O.D. gripping alternatively or in addition to the spring-loaded, mechanical gripping force maintenance device (see "Accessories" catalog section).

A, a Main/direct connection, gripper opening
B, b Main/direct connection, gripper closing
① Gripper connection
② Finger connection
(80) Depth of the centering sleeve hole in the matching part

## AS/IS gripping force maintenance device

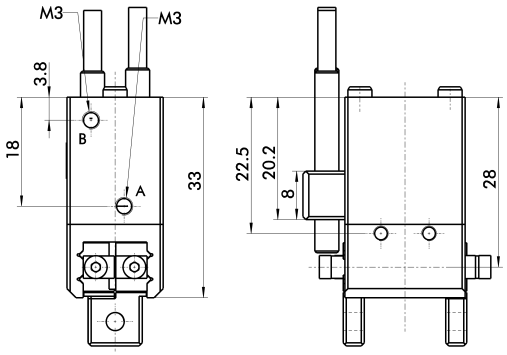


The mechanical gripping force maintenance device ensures a minimum gripping force even in case of pressure drop. This acts as closing force in the AS version, and as opening force in the IS version. In addition, the gripping force maintenance device can also be used for increasing the gripping force or for single-acting gripping.

## Flexible Position Sensor

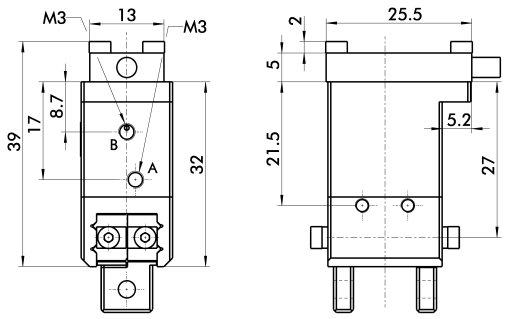


The FPS flexible position sensor can distinguish between five freely programmable ranges or switching points for the stroke of a gripper and can be used in conjunction with a PC as a measuring system.

## Modular Assembly Automation

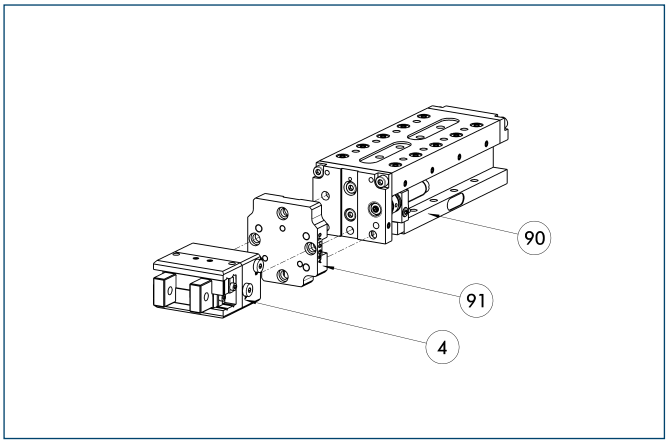


④ Gripper
⑨⓪ CLM
⑨① ASG

This gripper can be combined with the standard linear modules LM, KLM, CLM and ELM of the GEMOTEC modular system. For more information see our main catalog "Modular Assembly Automation".

## Finger blanks

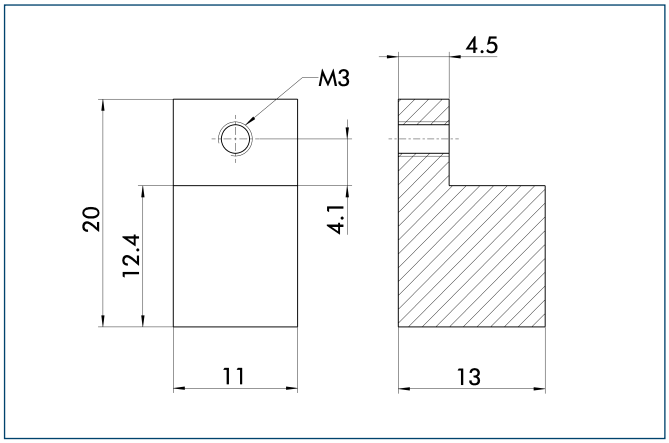


Finger blanks for customized subsequent machining

| Description | ID | Material | Scope of delivery |
|---|---|---|---|
| Finger blanks | | | |
| ABR 20 | **0340210** | Aluminum | 2 |

You can find more detailed information and individual parts of the above-mentioned accessories in the "Accessories" catalog section.

## Inductive proximity switches

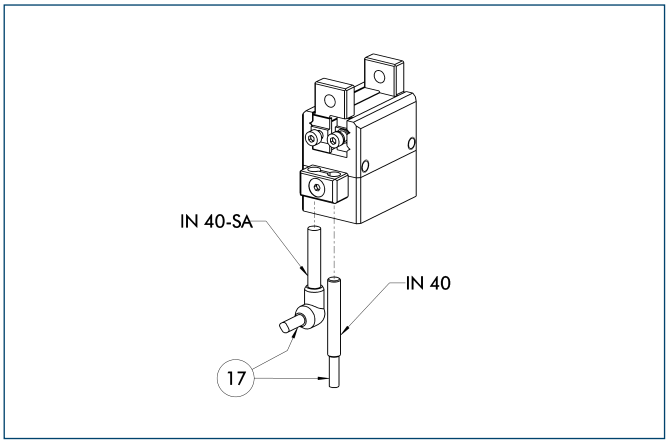


⑰ Cable outlet

End position monitoring for direct mounting

| Description | ID | Recommended product |
|---|---|---|
| Inductive proximity switches | | |
| IN 40-S-M8 | **0301474** | • |
| IN 40-S-M12 | **0301574** | |
| INK 40-S | **0301555** | |
| IN 40-S-M5-PNP | **0301491** | |
| IN 40-S-M5-NPN | **0301492** | |
| Inductive proximity switch with lateral outlet | | |
| IN 40-S-M12-SA | **0301577** | |
| IN 40-S-M8-SA | **0301473** | • |
| INK 40-S-SA | **0301565** | |
| Connection cables | | |
| KA BG05-L 3P-0300 | **0301652** | |
| KA BG08-L 3P-0300-PNP | **0301622** | |
| KA BG08-L 3P-0500-PNP | **0301623** | |
| KA BG12-L 3P-0500-PNP | **30016369** | |
| KA BW05-L 3P-0300 | **0301650** | |
| KA BW08-L 3P-0300-PNP | **0301594** | |
| KA BW08-L 3P-0500-PNP | **0301502** | |
| KA BW12-L 3P-0300-PNP | **0301503** | |
| KA BW12-L 3P-0500-PNP | **0301507** | |
| Cable extensions | | |
| KV BG12-SG12 3P-0030-PNP | **0301999** | |
| KV BG12-SG12 3P-0060-PNP | **0301998** | |
| KV BW08-SG08 3P-0030-PNP | **0301495** | |
| KV BW08-SG08 3P-0100-PNP | **0301496** | |
| KV BW08-SG08 3P-0200-PNP | **0301497** | |
| KV BW12-SG12 3P-0030-PNP | **0301595** | |
| KV BW12-SG12 3P-0100-PNP | **0301596** | |
| KV BW12-SG12 3P-0200-PNP | **0301597** | |

ⓘ Two sensors (closer/NO) are required for each gripper, plus extension cables as an option.

ⓘ Please note the minimum permitted bending radii for the sensor cables, which are generally 35 mm.

## Flexible Position Sensor

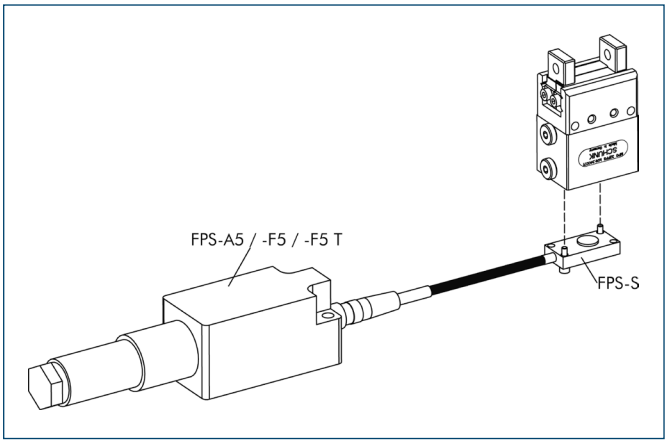


Flexible position monitoring of up to five positions

| Description | ID |
|---|---|
| Electronic Processor | |
| FPS-F5 | **0301805** |
| FPS-F5 T | **0301807** |
| Sensor | |
| FPS-S 13 | **0301705** |

ⓘ When using a FPS system, a FPS sensor (FPS-S) and a control unit (FPS-F5 / F5 T or A5) are required for each gripper as well as a mounting kit (AS), if listed. Cable extensions (KV) are available as options in the “Accessories” catalog section.

You can find more detailed information and individual parts of the above-mentioned accessories in the “Accessories” catalog section.

# MPG 25

**Pneumatic • 2-Finger Parallel Gripper • Gripper for small components**

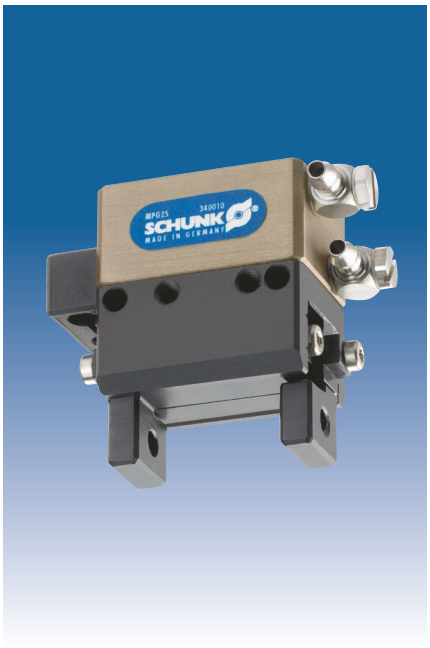

## Gripping force, I.D. gripping

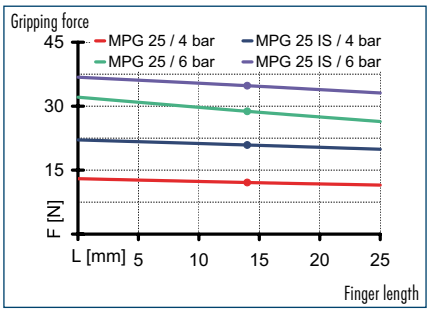


## Gripping force, O.D. gripping

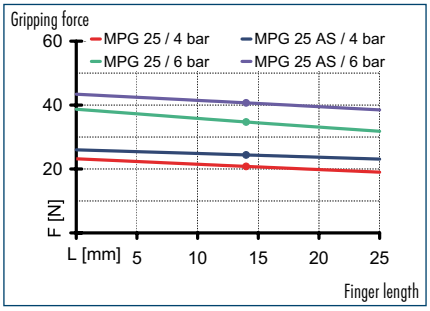


## Finger load

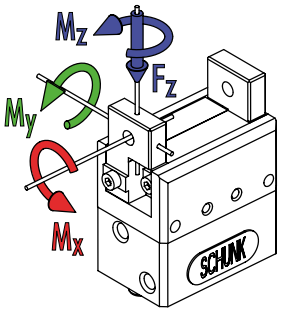


- $M_x$ max. 0.50 Nm
- $M_y$ max. 0.42 Nm
- $M_z$ max. 1.50 Nm
- $F_z$ max. 70.0 N

ⓘ The indicated moments and forces are static values, apply per base jaw and may occur simultaneously. $M_y$ may arise in addition to the moment generated by the gripping force itself. If the max. permitted finger weight is exceeded, it is imperative to throttle the air pressure so that the jaw movement occurs without any hitting or bouncing. Service life may be reduced.

## Technical data

| Description | | MPG 25 | MPG 25-FPS | MPG 25-AS | MPG 25-IS |
|---|---|---|---|---|---|
| **ID** | | **0340010** | **0340070** | **0340040** | **0340060** |
| Stroke per finger | [mm] | 3 | 3 | 3 | 3 |
| Closing force | [N] | 31 | 31 | 41 | |
| Opening force | [N] | 28 | 28 | | 38 |
| Min. spring force | [N] | | | 10 | 9 |
| Weight | [kg] | 0.06 | 0.07 | 0.08 | 0.08 |
| Recommended workpiece weight | [kg] | 0.16 | 0.16 | 0.16 | 0.16 |
| Air consumption per double stroke | [cm³] | 1.08 | 1.14 | 2.39 | 1.95 |
| Min./max. operating pressure | [bar] | 2/8 | 2/8 | 4/6.5 | 4/6.5 |
| Nominal operating pressure | [bar] | 6 | 6 | 6 | 6 |
| Closing/opening time | [s] | 0.02/0.02 | 0.02/0.02 | 0.02/0.035 | 0.035/0.02 |
| Max. permitted finger length | [mm] | 25 | 25 | 25 | 25 |
| Max. permitted weight per finger | [kg] | 0.02 | 0.02 | 0.02 | 0.02 |
| IP class | | 30 | 30 | 30 | 30 |
| Min./max. ambient temperature | [°C] | -10/90 | -10/90 | -10/90 | -10/90 |
| Repeat accuracy | [mm] | 0.02 | 0.02 | 0.02 | 0.02 |
| Cleanroom class ISO-classification 14644-1 | | 5 | 5 | 5 | 5 |

## Main view

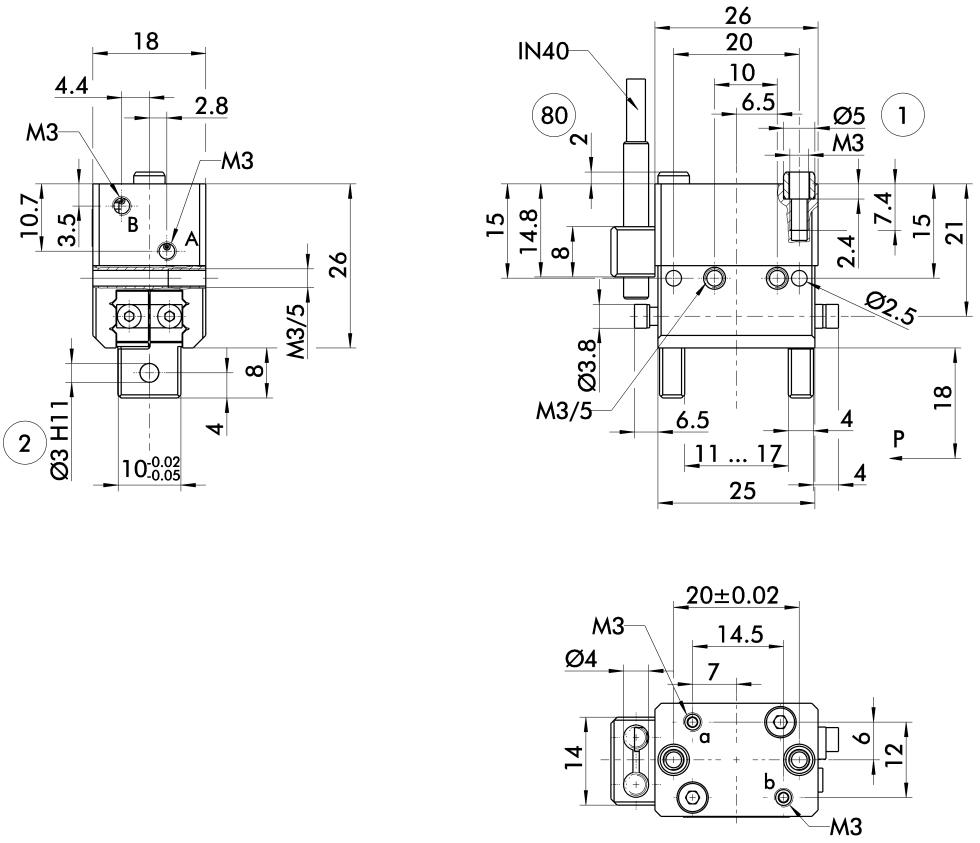


The drawing shows the gripper in the basic version with closed jaws, the dimensions do not include the options described below.

ⓘ The SDV-P pressure maintenance valve can also be used for I.D. or O.D. gripping alternatively or in addition to the spring-loaded, mechanical gripping force maintenance device (see "Accessories" catalog section).

A, a Main/direct connection, gripper opening
B, b Main/direct connection, gripper closing
① Gripper connection
② Finger connection
(80) Depth of the centering sleeve hole in the matching part

## Hose-free direct connection

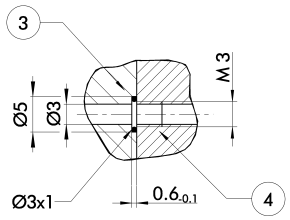


③ Adapter
④ Gripper

The direct connection is used for supplying compressed air without hoses. Instead, the pressure medium is fed through bore-holes in the mounting plate.

## AS/IS gripping force maintenance device

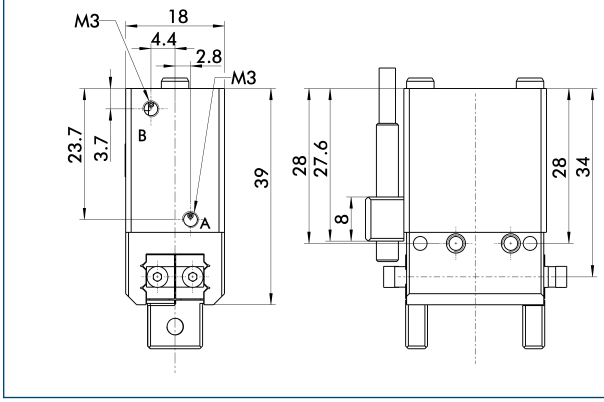


The mechanical gripping force maintenance device ensures a minimum gripping force even in case of pressure drop. This acts as closing force in the AS version, and as opening force in the IS version. In addition, the gripping force maintenance device can also be used for increasing the gripping force or for single-acting gripping.

## Flexible Position Sensor

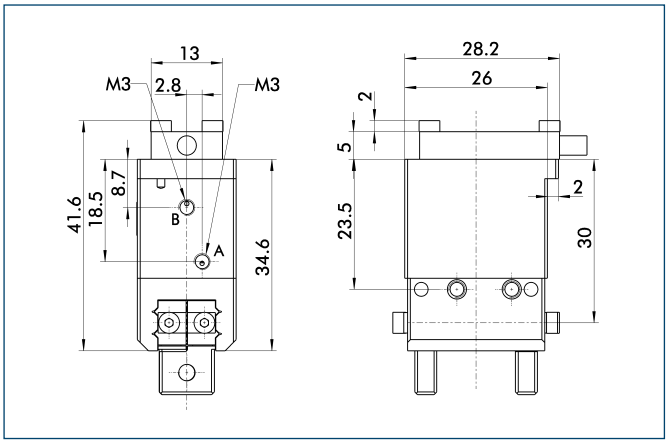


The FPS flexible position sensor can distinguish between five freely programmable ranges or switching points for the stroke of a gripper and can be used in conjunction with a PC as a measuring system.

## Modular Assembly Automation

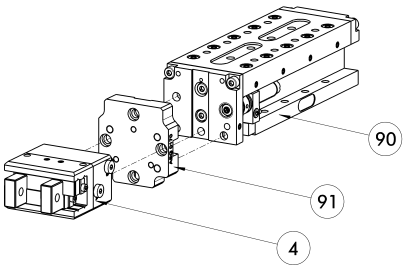


④ Gripper
⑨① ASG
⑨⓪ CLM

This gripper can be combined with the standard linear modules LM, KLM, CLM and ELM of the GEMOTEC modular system. For more information see our main catalog "Modular Assembly Automation".

## Finger blanks

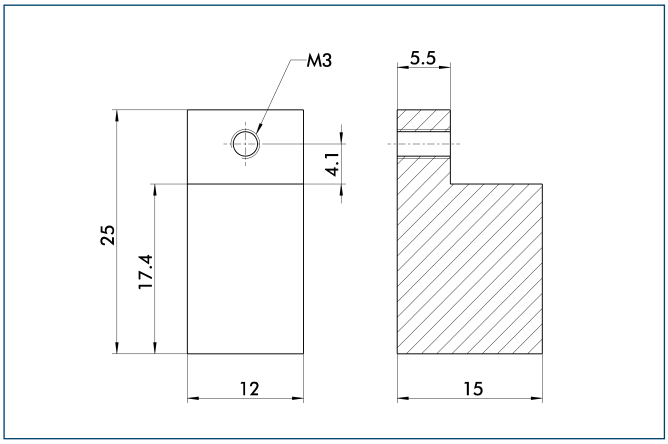


Finger blanks for customized subsequent machining

| Description | ID | Material | Scope of delivery |
|---|---|---|---|
| Finger blanks | | | |
| ABR 25 | **0340211** | Aluminum | 2 |

## Attachment valves

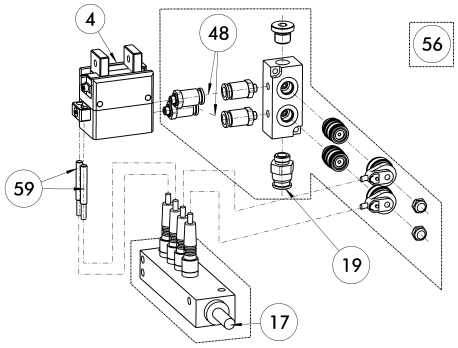


④ Gripper
⑤⑥ Included in delivery
①⑦ Cable outlet
⑤⑨ Monitoring "gripping"
①⑨ Air connection
④⑧ Hose

For each gripper one attachment valve ABV is required, optional with distributor for sensors and valves. Attachment valves increase the efficiency, reduce the installation work and air consumption and simplify air supply. For details please refer to the "Accessories" catalog section.

| Description | ID |
|---|---|
| Attachment valves | |
| ABV-MV15-S2-M5 | **0303375** |
| ABV-MV15-S2-M5-V2-M8 | **0303376** |
| ABV-MV15-S2-M5-V4-M8 | **0303377** |
| ABV-MV15-S2-M5-V8-M8 | **0303378** |

You can find more detailed information and individual parts of the above-mentioned accessories in the "Accessories" catalog section.

## Inductive proximity switches

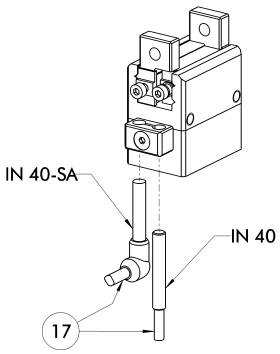


⑰ Cable outlet

End position monitoring for direct mounting

| Description | ID | Recommended product |
|---|---|---|
| Inductive proximity switches | | |
| IN 40-S-M8 | **0301474** | • |
| IN 40-S-M12 | **0301574** | |
| INK 40-S | **0301555** | |
| IN 40-S-M5-PNP | **0301491** | |
| IN 40-S-M5-NPN | **0301492** | |
| Inductive proximity switch with lateral outlet | | |
| IN 40-S-M12-SA | **0301577** | |
| IN 40-S-M8-SA | **0301473** | • |
| INK 40-S-SA | **0301565** | |
| Connection cables | | |
| KA BG05-L 3P-0300 | **0301652** | |
| KA BG08-L 3P-0300-PNP | **0301622** | |
| KA BG08-L 3P-0500-PNP | **0301623** | |
| KA BG12-L 3P-0500-PNP | **30016369** | |
| KA BW05-L 3P-0300 | **0301650** | |
| KA BW08-L 3P-0300-PNP | **0301594** | |
| KA BW08-L 3P-0500-PNP | **0301502** | |
| KA BW12-L 3P-0300-PNP | **0301503** | |
| KA BW12-L 3P-0500-PNP | **0301507** | |
| Cable extensions | | |
| KV BG12-SG12 3P-0030-PNP | **0301999** | |
| KV BG12-SG12 3P-0060-PNP | **0301998** | |
| KV BW08-SG08 3P-0030-PNP | **0301495** | |
| KV BW08-SG08 3P-0100-PNP | **0301496** | |
| KV BW08-SG08 3P-0200-PNP | **0301497** | |
| KV BW12-SG12 3P-0030-PNP | **0301595** | |
| KV BW12-SG12 3P-0100-PNP | **0301596** | |
| KV BW12-SG12 3P-0200-PNP | **0301597** | |

ⓘ Two sensors (closer/NO) are required for each gripper, plus extension cables as an option.

ⓘ Please note the minimum permitted bending radii for the sensor cables, which are generally 35 mm.

## Mounting kit for proximity switch

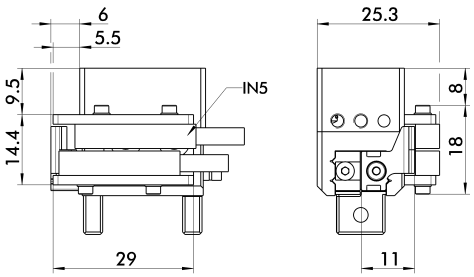


The mounting kit includes a bracket, switch cams and mounting screws. Proximity switches must be ordered separately.

| Description | ID |
|---|---|
| Mounting kit for proximity switch | |
| AS-MPG 25 | **0340150** |

ⓘ This mounting kit needs to be ordered optionally as an accessory.

You can find more detailed information and individual parts of the above-mentioned accessories in the “Accessories” catalog section.

## Inductive proximity switches

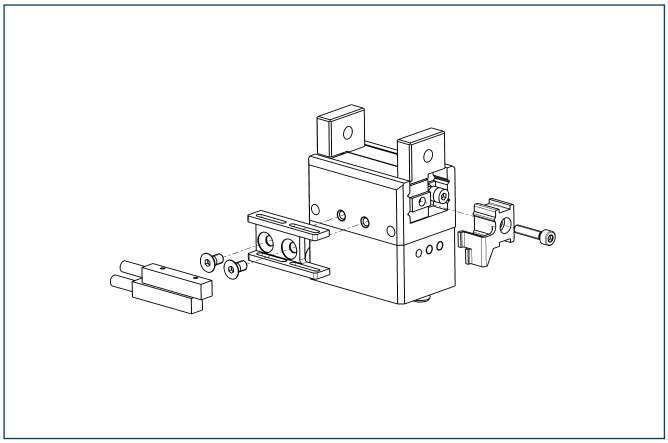

End position monitoring mounted with mounting kit

| Description | ID | Recommended product |
|---|---|---|
| Mounting kit for proximity switch | | |
| AS-MPG 25 | **0340150** | |
| Inductive proximity switches | | |
| IN 5-S-M8 | **0301469** | • |
| IN 5-S-M12 | **0301569** | |

ⓘ Two sensors (closer/NO) are required for each gripper, plus extension cables as an option.

ⓘ This mounting kit needs to be ordered optionally as an accessory.

ⓘ Please note the minimum permitted bending radii for the sensor cables, which are generally 35 mm.

## Flexible Position Sensor

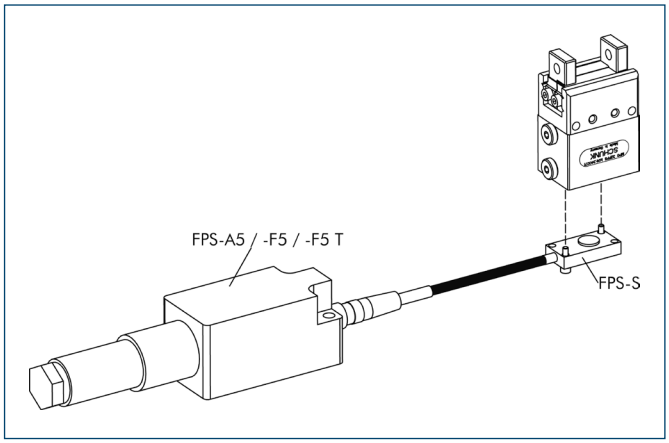


Flexible position monitoring of up to five positions

| Description | ID |
|---|---|
| Electronic Processor | |
| FPS-F5 | **0301805** |
| FPS-F5 T | **0301807** |
| Sensor | |
| FPS-S 13 | **0301705** |

ⓘ When using a FPS system, a FPS sensor (FPS-S) and a control unit (FPS-F5 / F5 T or A5) are required for each gripper as well as a mounting kit (AS), if listed. Cable extensions (KV) are available as options in the “Accessories” catalog section.

You can find more detailed information and individual parts of the above-mentioned accessories in the “Accessories” catalog section.

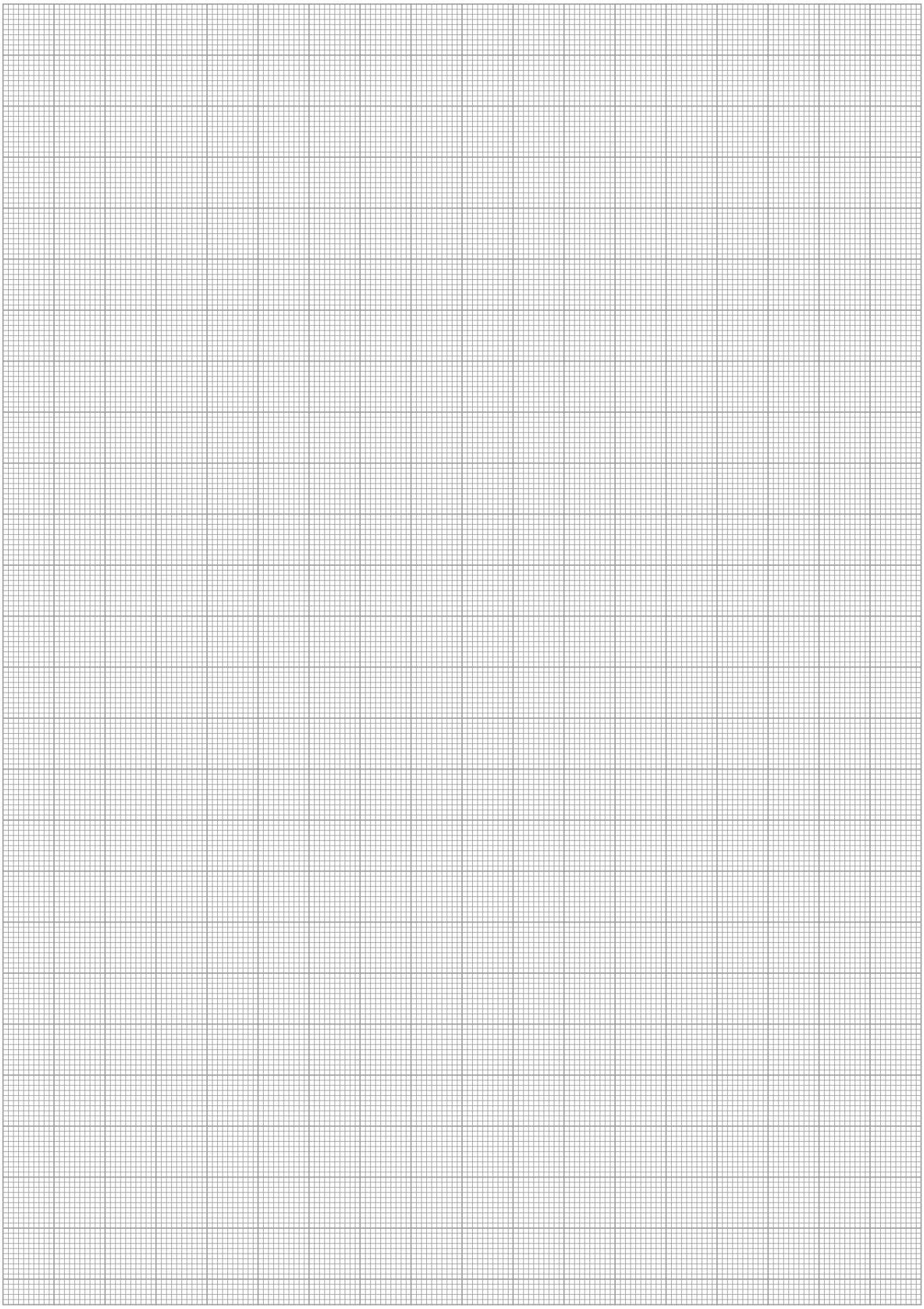

# MPG 32

**Pneumatic • 2-Finger Parallel Gripper • Gripper for small components**



## Gripping force, I.D. gripping

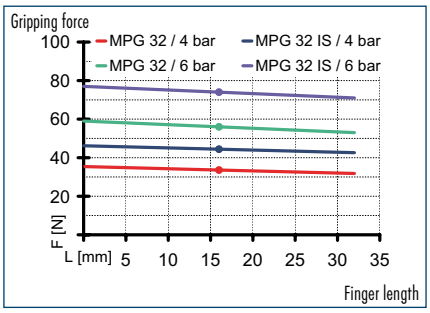


## Gripping force, O.D. gripping

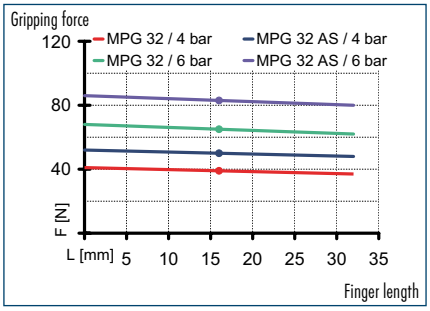


## Finger load

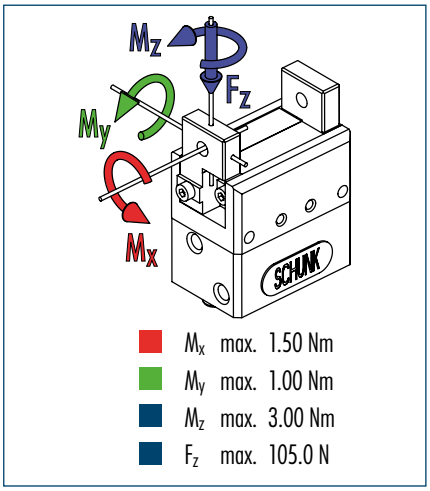


ⓘ The indicated moments and forces are static values, apply per base jaw and may occur simultaneously. $M_y$ may arise in addition to the moment generated by the gripping force itself. If the max. permitted finger weight is exceeded, it is imperative to throttle the air pressure so that the jaw movement occurs without any hitting or bouncing. Service life may be reduced.

## Technical data

| Description | | MPG 32 | MPG 32-FPS | MPG 32-AS | MPG 32-IS |
|---|---|---|---|---|---|
| ID | | 0340011 | 0340071 | 0340041 | 0340061 |
| Stroke per finger | [mm] | 4 | 4 | 4 | 4 |
| Closing force | [N] | 65 | 65 | 85 | |
| Opening force | [N] | 55 | 55 | | 80 |
| Min. spring force | [N] | | | 20 | 25 |
| Weight | [kg] | 0.12 | 0.14 | 0.14 | 0.14 |
| Recommended workpiece weight | [kg] | 0.33 | 0.33 | 0.33 | 0.33 |
| Air consumption per double stroke | [cm³] | 2.55 | 2.59 | 5.03 | 4.49 |
| Min./max. operating pressure | [bar] | 2/8 | 2/8 | 4/6.5 | 4/6.5 |
| Nominal operating pressure | [bar] | 6 | 6 | 6 | 6 |
| Closing/opening time | [s] | 0.025/0.025 | 0.025/0.025 | 0.035/0.05 | 0.05/0.035 |
| Max. permitted finger length | [mm] | 32 | 32 | 32 | 32 |
| Max. permitted weight per finger | [kg] | 0.04 | 0.04 | 0.04 | 0.04 |
| IP class | | 30 | 30 | 30 | 30 |
| Min./max. ambient temperature | [°C] | -10/90 | -10/90 | -10/90 | -10/90 |
| Repeat accuracy | [mm] | 0.02 | 0.02 | 0.02 | 0.02 |
| Cleanroom class ISO-classification 14644-1 | | 5 | 5 | 5 | 5 |

## Main view

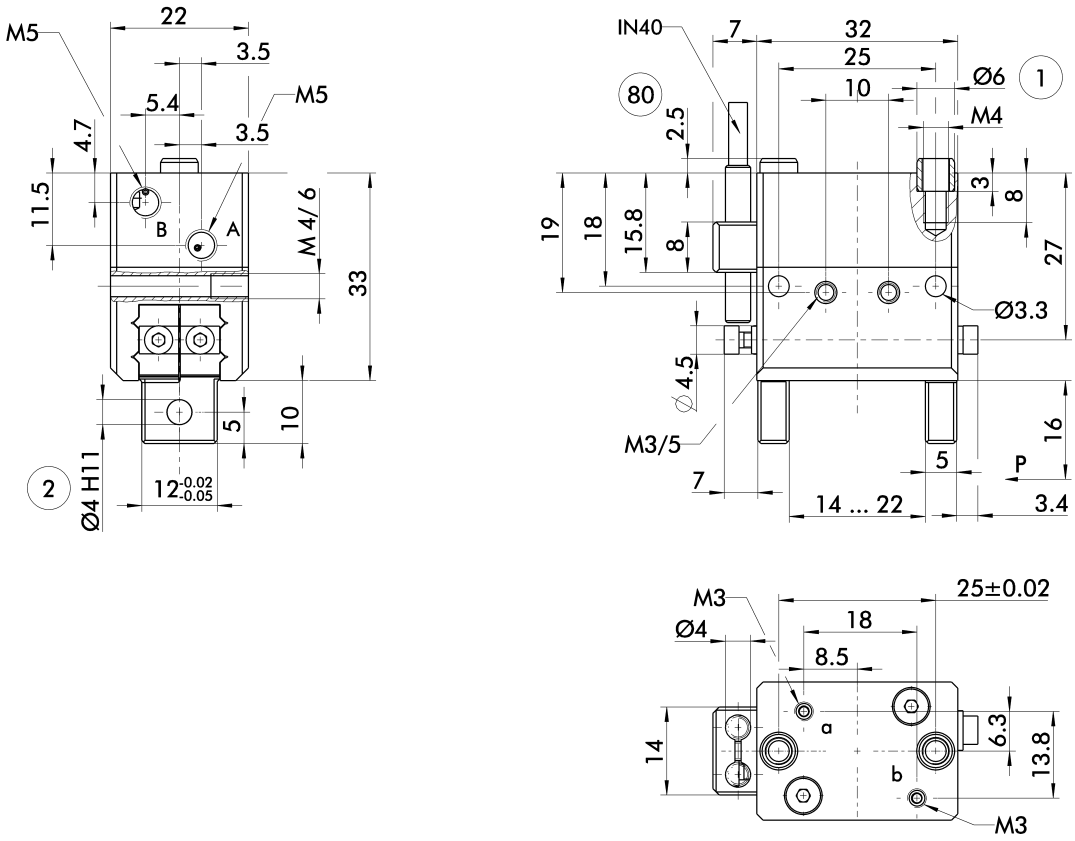


The drawing shows the gripper in the basic version with closed jaws, the dimensions do not include the options described below.

ⓘ The SDV-P pressure maintenance valve can also be used for I.D. or O.D. gripping alternatively or in addition to the spring-loaded, mechanical gripping force maintenance device (see "Accessories" catalog section).

A, a Main/direct connection, gripper opening
B, b Main/direct connection, gripper closing
① Gripper connection
② Finger connection
80 Depth of the centering sleeve hole in the matching part

## Hose-free direct connection

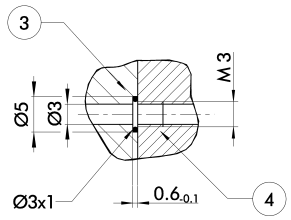


③ Adapter
④ Gripper

The direct connection is used for supplying compressed air without hoses. Instead, the pressure medium is fed through bore-holes in the mounting plate.

## AS/IS gripping force maintenance device

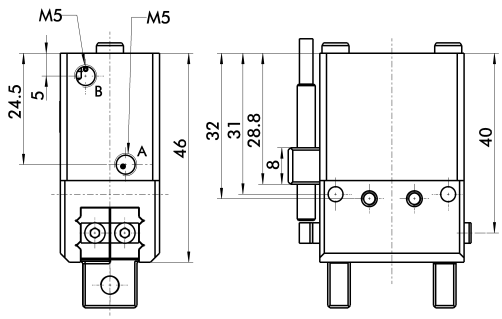


The mechanical gripping force maintenance device ensures a minimum gripping force even in case of pressure drop. This acts as closing force in the AS version, and as opening force in the IS version. In addition, the gripping force maintenance device can also be used for increasing the gripping force or for single-acting gripping.

## Flexible Position Sensor

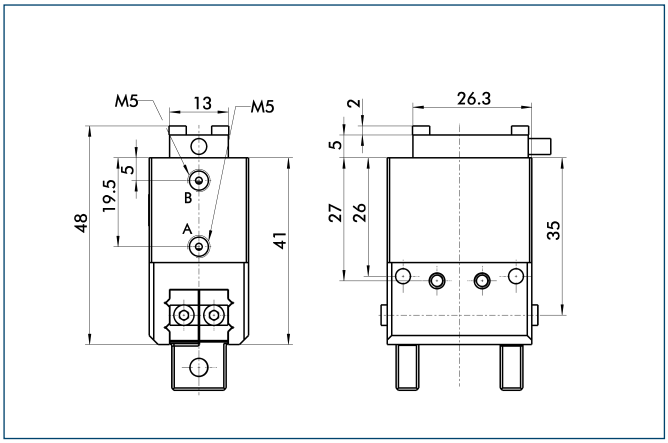


The FPS flexible position sensor can distinguish between five freely programmable ranges or switching points for the stroke of a gripper and can be used in conjunction with a PC as a measuring system.

## Modular Assembly Automation

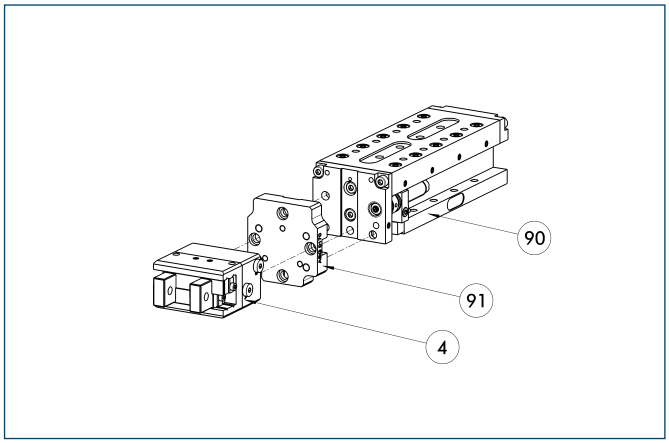


④ Gripper
⑨① ASG
⑨⓪ CLM

This gripper can be combined with the standard linear modules LM, KLM, CLM and ELM of the GEMOTEC modular system. For more information see our main catalog "Modular Assembly Automation".

## Finger blanks

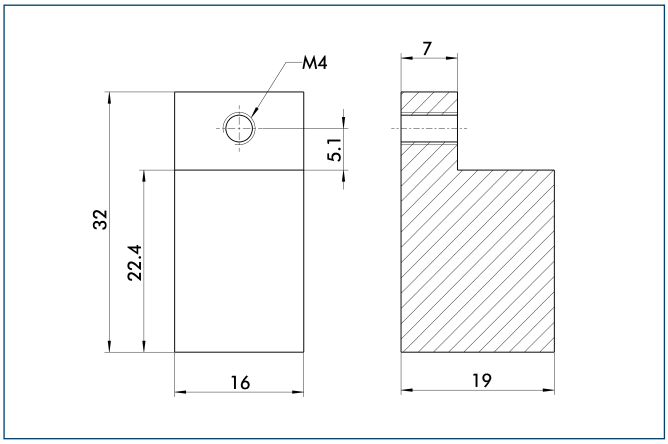


Finger blanks for customized subsequent machining

| Description | ID | Material | Scope of delivery |
|---|---|---|---|
| Finger blanks | | | |
| ABR 32 | **0340212** | Aluminum | 2 |

## Attachment valves

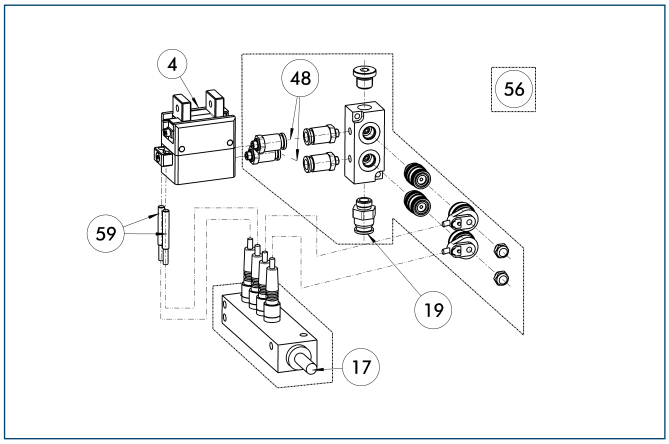


④ Gripper
⑤⑥ Included in delivery
⑰ Cable outlet
⑤⑨ Monitoring "gripping"
⑲ Air connection
④⑧ Hose

For each gripper one attachment valve ABV is required, optional with distributor for sensors and valves. Attachment valves increase the efficiency, reduce the installation work and air consumption and simplify air supply. For details please refer to the "Accessories" catalog section.

| Description | ID |
|---|---|
| Attachment valves | |
| ABV-MV15-S2-M5 | **0303375** |
| ABV-MV15-S2-M5-V2-M8 | **0303376** |
| ABV-MV15-S2-M5-V4-M8 | **0303377** |
| ABV-MV15-S2-M5-V8-M8 | **0303378** |

You can find more detailed information and individual parts of the above-mentioned accessories in the "Accessories" catalog section.

## Inductive proximity switches

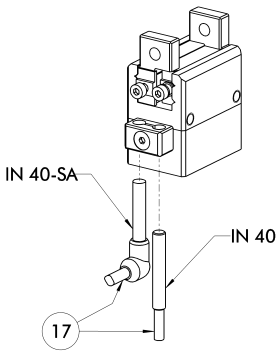


⑰ Cable outlet

End position monitoring for direct mounting

| Description | ID | Recommended product |
|---|---|---|
| Inductive proximity switches | | |
| IN 40-S-M8 | **0301474** | • |
| IN 40-S-M12 | **0301574** | |
| INK 40-S | **0301555** | |
| IN 40-S-M5-PNP | **0301491** | |
| IN 40-S-M5-NPN | **0301492** | |
| Inductive proximity switch with lateral outlet | | |
| IN 40-S-M12-SA | **0301577** | |
| IN 40-S-M8-SA | **0301473** | • |
| INK 40-S-SA | **0301565** | |
| Connection cables | | |
| KA BG05-L 3P-0300 | **0301652** | |
| KA BG08-L 3P-0300-PNP | **0301622** | |
| KA BG08-L 3P-0500-PNP | **0301623** | |
| KA BG12-L 3P-0500-PNP | **30016369** | |
| KA BW05-L 3P-0300 | **0301650** | |
| KA BW08-L 3P-0300-PNP | **0301594** | |
| KA BW08-L 3P-0500-PNP | **0301502** | |
| KA BW12-L 3P-0300-PNP | **0301503** | |
| KA BW12-L 3P-0500-PNP | **0301507** | |
| Cable extensions | | |
| KV BG12-SG12 3P-0030-PNP | **0301999** | |
| KV BG12-SG12 3P-0060-PNP | **0301998** | |
| KV BW08-SG08 3P-0030-PNP | **0301495** | |
| KV BW08-SG08 3P-0100-PNP | **0301496** | |
| KV BW08-SG08 3P-0200-PNP | **0301497** | |
| KV BW12-SG12 3P-0030-PNP | **0301595** | |
| KV BW12-SG12 3P-0100-PNP | **0301596** | |
| KV BW12-SG12 3P-0200-PNP | **0301597** | |

ⓘ Two sensors (closer/NO) are required for each gripper, plus extension cables as an option.

ⓘ Please note the minimum permitted bending radii for the sensor cables, which are generally 35 mm.

## Mounting kit for proximity switch

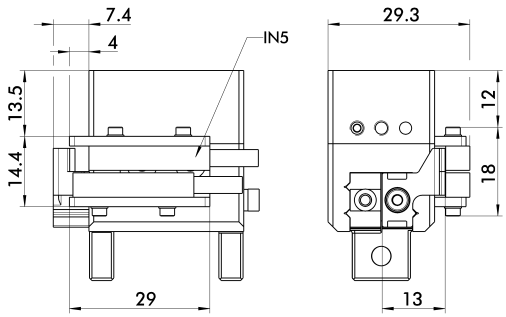


The mounting kit includes a bracket, switch cams and mounting screws. Proximity switches must be ordered separately.

| Description | ID |
|---|---|
| Mounting kit for proximity switch | |
| AS-MPG 32 | **0340151** |

ⓘ This mounting kit needs to be ordered optionally as an accessory.

You can find more detailed information and individual parts of the above-mentioned accessories in the “Accessories” catalog section.

## Inductive proximity switches

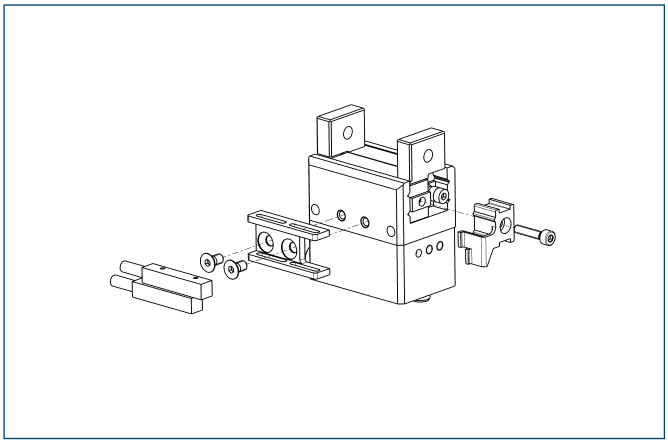

End position monitoring mounted with mounting kit

| Description | ID | Recommended product |
|---|---|---|
| Mounting kit for proximity switch | | |
| AS-MPG 32 | **0340151** | |
| Inductive proximity switches | | |
| IN 5-S-M8 | **0301469** | • |
| IN 5-S-M12 | **0301569** | |

ⓘ Two sensors (closer/NO) are required for each gripper, plus extension cables as an option.
ⓘ This mounting kit needs to be ordered optionally as an accessory.
ⓘ Please note the minimum permitted bending radii for the sensor cables, which are generally 35 mm.

## Flexible Position Sensor

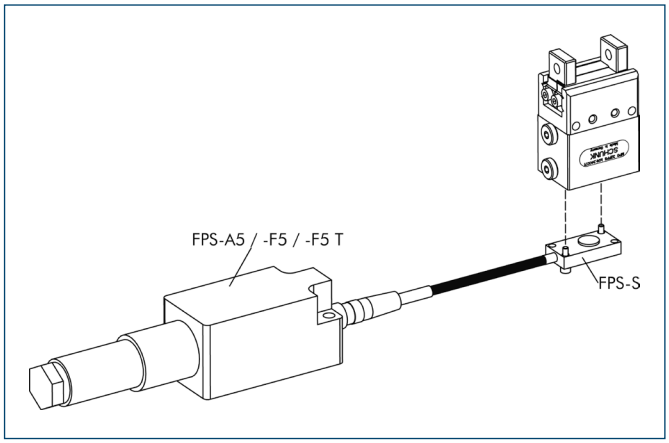


Flexible position monitoring of up to five positions

| Description | ID |
|---|---|
| Electronic Processor | |
| FPS-F5 | **0301805** |
| FPS-F5 T | **0301807** |
| Sensor | |
| FPS-S 13 | **0301705** |

ⓘ When using a FPS system, a FPS sensor (FPS-S) and a control unit (FPS-F5 / F5 T or A5) are required for each gripper as well as a mounting kit (AS), if listed. Cable extensions (KV) are available as options in the “Accessories” catalog section.

You can find more detailed information and individual parts of the above-mentioned accessories in the “Accessories” catalog section.

# MPG 40

**Pneumatic • 2-Finger Parallel Gripper • Gripper for small components**



## Gripping force, I.D. gripping

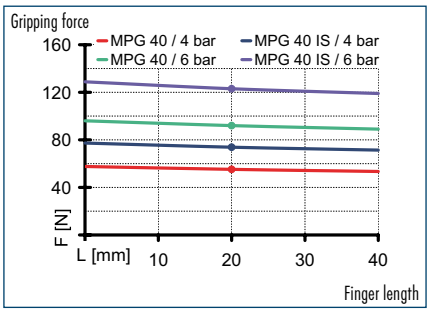


## Gripping force, O.D. gripping

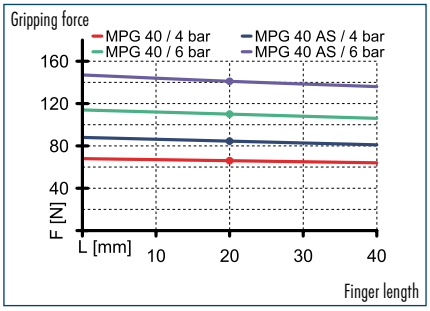


## Finger load

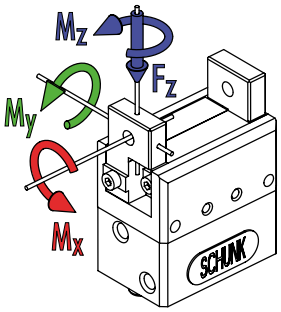


- $M_x$ max. 1.50 Nm
- $M_y$ max. 2.00 Nm
- $M_z$ max. 4.00 Nm
- $F_z$ max. 170.0 N

ⓘ The indicated moments and forces are static values, apply per base jaw and may occur simultaneously. $M_y$ may arise in addition to the moment generated by the gripping force itself. If the max. permitted finger weight is exceeded, it is imperative to throttle the air pressure so that the jaw movement occurs without any hitting or bouncing. Service life may be reduced.

## Technical data

| Description | | MPG 40 | MPG 40-AS | MPG 40-IS |
|---|---|---|---|---|
| ID | | 0340012 | 0340042 | 0340062 |
| Stroke per finger | [mm] | 6 | 6 | 6 |
| Closing force | [N] | 110 | 145 | |
| Opening force | [N] | 90 | | 115 |
| Min. spring force | [N] | | 35 | 25 |
| Weight | [kg] | 0.2 | 0.26 | 0.26 |
| Recommended workpiece weight | [kg] | 0.55 | 0.55 | 0.55 |
| Air consumption per double stroke | [cm³] | 5.76 | 12.5 | 10.98 |
| Min./max. operating pressure | [bar] | 2/8 | 4/6.5 | 4/6.5 |
| Nominal operating pressure | [bar] | 6 | 6 | 6 |
| Closing/opening time | [s] | 0.05/0.05 | 0.055/0.08 | 0.08/0.055 |
| Max. permitted finger length | [mm] | 40 | 40 | 40 |
| Max. permitted weight per finger | [kg] | 0.08 | 0.08 | 0.08 |
| IP class | | 30 | 30 | 30 |
| Min./max. ambient temperature | [°C] | -10/90 | -10/90 | -10/90 |
| Repeat accuracy | [mm] | 0.02 | 0.02 | 0.02 |
| Cleanroom class ISO-classification 14644-1 | | 5 | 5 | 5 |

## Main view

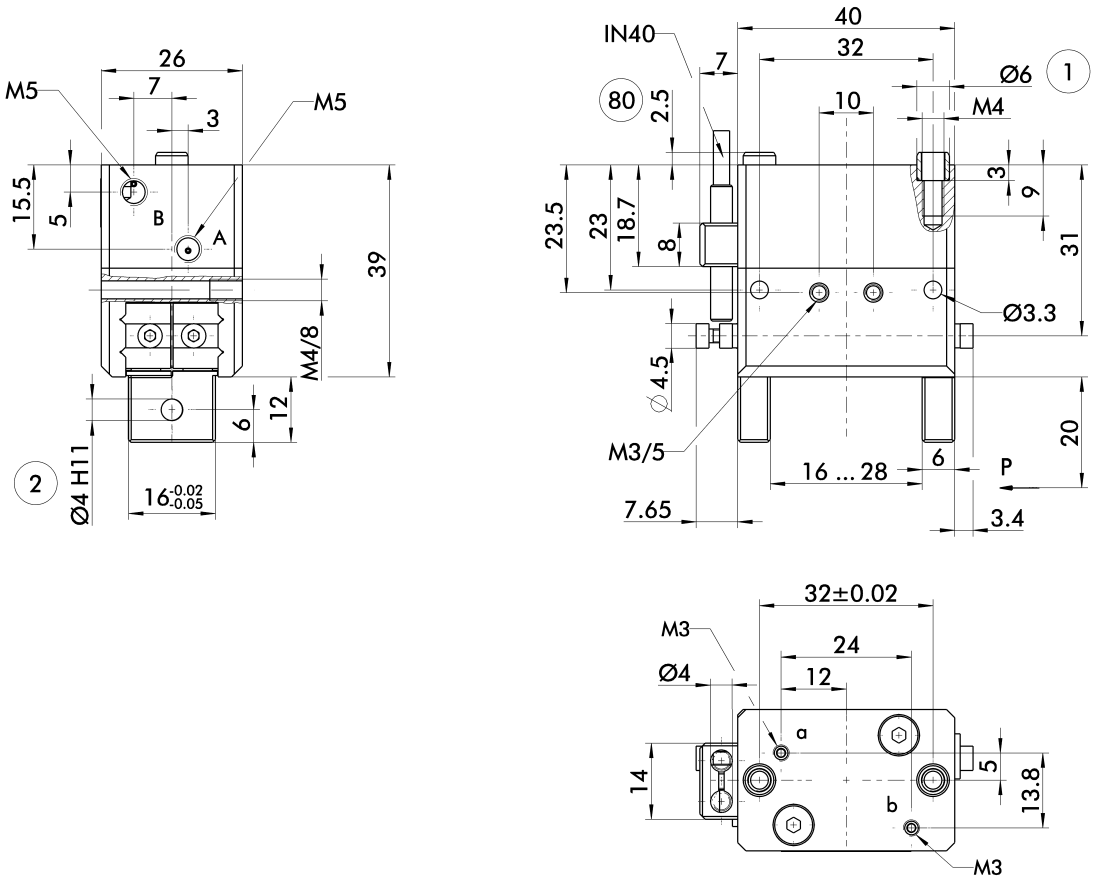


The drawing shows the gripper in the basic version with closed jaws, the dimensions do not include the options described below.

ⓘ The SDV-P pressure maintenance valve can also be used for I.D. or O.D. gripping alternatively or in addition to the spring-loaded, mechanical gripping force maintenance device (see "Accessories" catalog section).

A, a Main/direct connection, gripper opening
B, b Main/direct connection, gripper closing
① Gripper connection
② Finger connection
⑧⓪ Depth of the centering sleeve hole in the matching part

## Hose-free direct connection

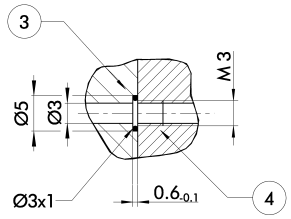


③ Adapter
④ Gripper

The direct connection is used for supplying compressed air without hoses. Instead, the pressure medium is fed through bore-holes in the mounting plate.

## AS/IS gripping force maintenance device

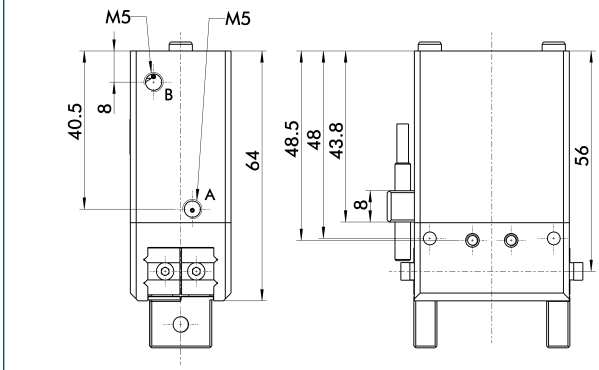


The mechanical gripping force maintenance device ensures a minimum gripping force even in case of pressure drop. This acts as closing force in the AS version, and as opening force in the IS version. In addition, the gripping force maintenance device can also be used for increasing the gripping force or for single-acting gripping.

## Modular Assembly Automation

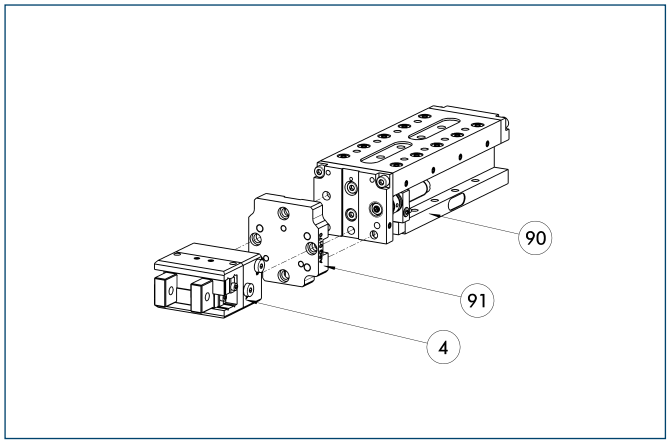


④ Gripper
⑨⓪ CLM
⑨① ASG

This gripper can be combined with the standard linear modules LM, KLM, CLM and ELM of the GEMOTEC modular system. For more information see our main catalog "Modular Assembly Automation".

## Finger blanks

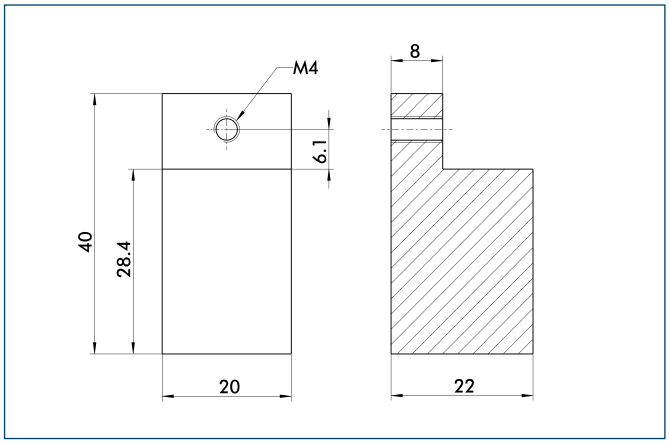


Finger blanks for customized subsequent machining

| Description | ID | Material | Scope of delivery |
|---|---|---|---|
| Finger blanks | | | |
| ABR 40 | **0340213** | Aluminum | 2 |

## Attachment valves

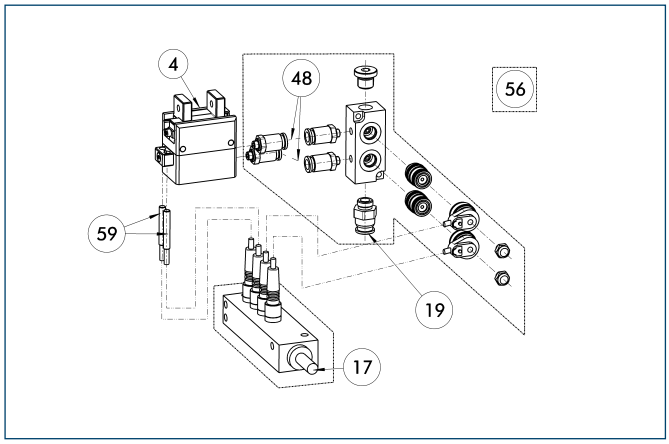


④ Gripper
⑰ Cable outlet
⑲ Air connection
④⑧ Hose
⑤⑥ Included in delivery
⑤⑨ Monitoring "gripping"

For each gripper one attachment valve ABV is required, optional with distributor for sensors and valves. Attachment valves increase the efficiency, reduce the installation work and air consumption and simplify air supply. For details please refer to the "Accessories" catalog section.

| Description | ID |
|---|---|
| Attachment valves | |
| ABV-MV15-S2-M5 | **0303375** |
| ABV-MV15-S2-M5-V2-M8 | **0303376** |
| ABV-MV15-S2-M5-V4-M8 | **0303377** |
| ABV-MV15-S2-M5-V8-M8 | **0303378** |

## Mounting kit for FPS

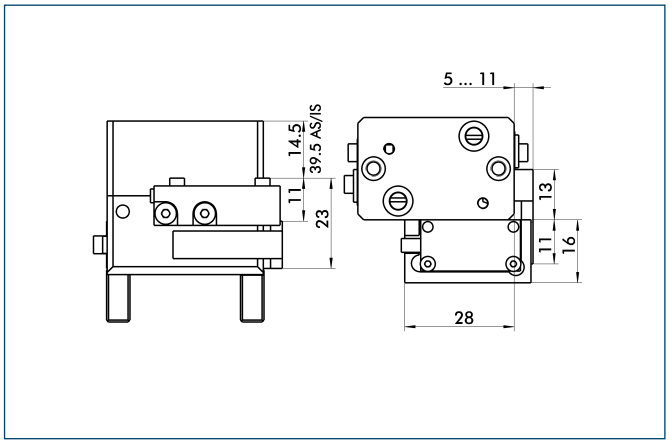


The FPS flexible position sensor can distinguish between five freely programmable ranges or switching points for the stroke of a gripper and can be used in conjunction with a PC as a measuring system.

| Description | ID |
|---|---|
| Mounting kit for FPS | |
| AS-MPG 40 | **0301762** |

You can find more detailed information and individual parts of the above-mentioned accessories in the "Accessories" catalog section.

## Inductive proximity switches

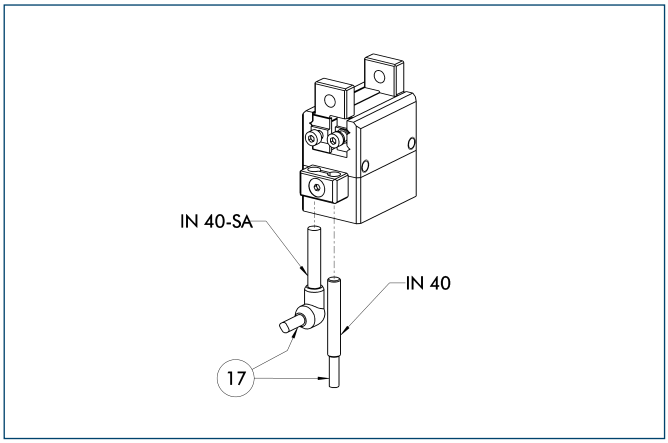


⑰ Cable outlet

End position monitoring for direct mounting

| Description | ID | Recommended product |
|---|---|---|
| Inductive proximity switches | | |
| IN 40-S-M8 | **0301474** | • |
| IN 40-S-M12 | **0301574** | |
| INK 40-S | **0301555** | |
| IN 40-S-M5-PNP | **0301491** | |
| IN 40-S-M5-NPN | **0301492** | |
| Inductive proximity switch with lateral outlet | | |
| IN 40-S-M12-SA | **0301577** | |
| IN 40-S-M8-SA | **0301473** | • |
| INK 40-S-SA | **0301565** | |
| Connection cables | | |
| KA BG05-L 3P-0300 | **0301652** | |
| KA BG08-L 3P-0300-PNP | **0301622** | |
| KA BG08-L 3P-0500-PNP | **0301623** | |
| KA BG12-L 3P-0500-PNP | **30016369** | |
| KA BW05-L 3P-0300 | **0301650** | |
| KA BW08-L 3P-0300-PNP | **0301594** | |
| KA BW08-L 3P-0500-PNP | **0301502** | |
| KA BW12-L 3P-0300-PNP | **0301503** | |
| KA BW12-L 3P-0500-PNP | **0301507** | |
| Cable extensions | | |
| KV BG12-SG12 3P-0030-PNP | **0301999** | |
| KV BG12-SG12 3P-0060-PNP | **0301998** | |
| KV BW08-SG08 3P-0030-PNP | **0301495** | |
| KV BW08-SG08 3P-0100-PNP | **0301496** | |
| KV BW08-SG08 3P-0200-PNP | **0301497** | |
| KV BW12-SG12 3P-0030-PNP | **0301595** | |
| KV BW12-SG12 3P-0100-PNP | **0301596** | |
| KV BW12-SG12 3P-0200-PNP | **0301597** | |

ⓘ Two sensors (closer/NO) are required for each gripper, plus extension cables as an option.

ⓘ Please note the minimum permitted bending radii for the sensor cables, which are generally 35 mm.

## Mounting kit for proximity switch

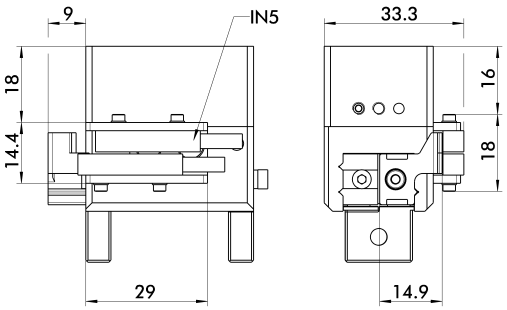


The mounting kit includes a bracket, switch cams and mounting screws. Proximity switches must be ordered separately.

| Description | ID |
|---|---|
| Mounting kit for proximity switch | |
| AS-MPG 40 | **0340152** |

ⓘ This mounting kit needs to be ordered optionally as an accessory.

You can find more detailed information and individual parts of the above-mentioned accessories in the “Accessories” catalog section.

## Inductive proximity switches

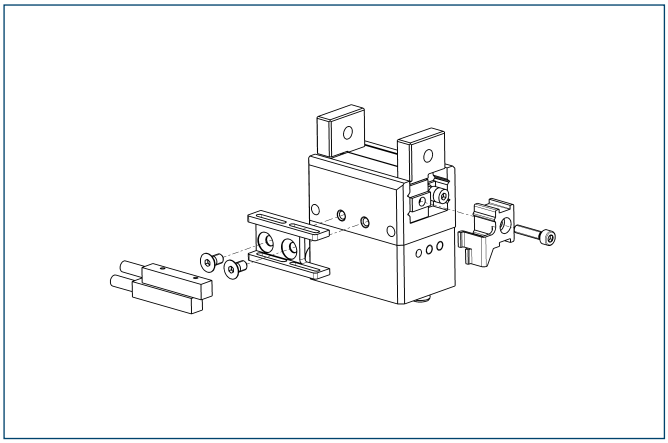

End position monitoring mounted with mounting kit

| Description | ID | Recommended product |
|---|---|---|
| Mounting kit for proximity switch | | |
| AS-MPG 40 | **0340152** | |
| Inductive proximity switches | | |
| IN 5-S-M8 | **0301469** | • |
| IN 5-S-M12 | **0301569** | |

ⓘ Two sensors (closer/NO) are required for each gripper, plus extension cables as an option.

ⓘ This mounting kit needs to be ordered optionally as an accessory.

ⓘ Please note the minimum permitted bending radii for the sensor cables, which are generally 35 mm.

## Flexible Position Sensor

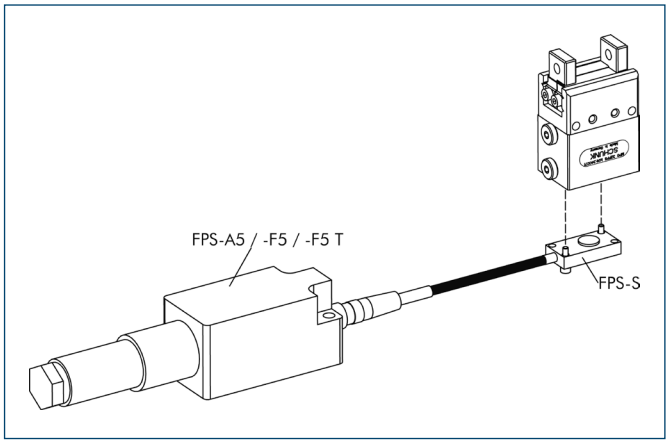


Flexible position monitoring of up to five positions

| Description | ID |
|---|---|
| Mounting kit for FPS | |
| AS-MPG 40 | **0301762** |
| Electronic Processor | |
| FPS-F5 | **0301805** |
| FPS-F5 T | **0301807** |
| Sensor | |
| FPS-S 13 | **0301705** |

ⓘ When using a FPS system, a FPS sensor (FPS-S) and a control unit (FPS-F5 / F5 T or A5) are required for each gripper as well as a mounting kit (AS), if listed. Cable extensions (KV) are available as options in the “Accessories” catalog section.

You can find more detailed information and individual parts of the above-mentioned accessories in the “Accessories” catalog section.

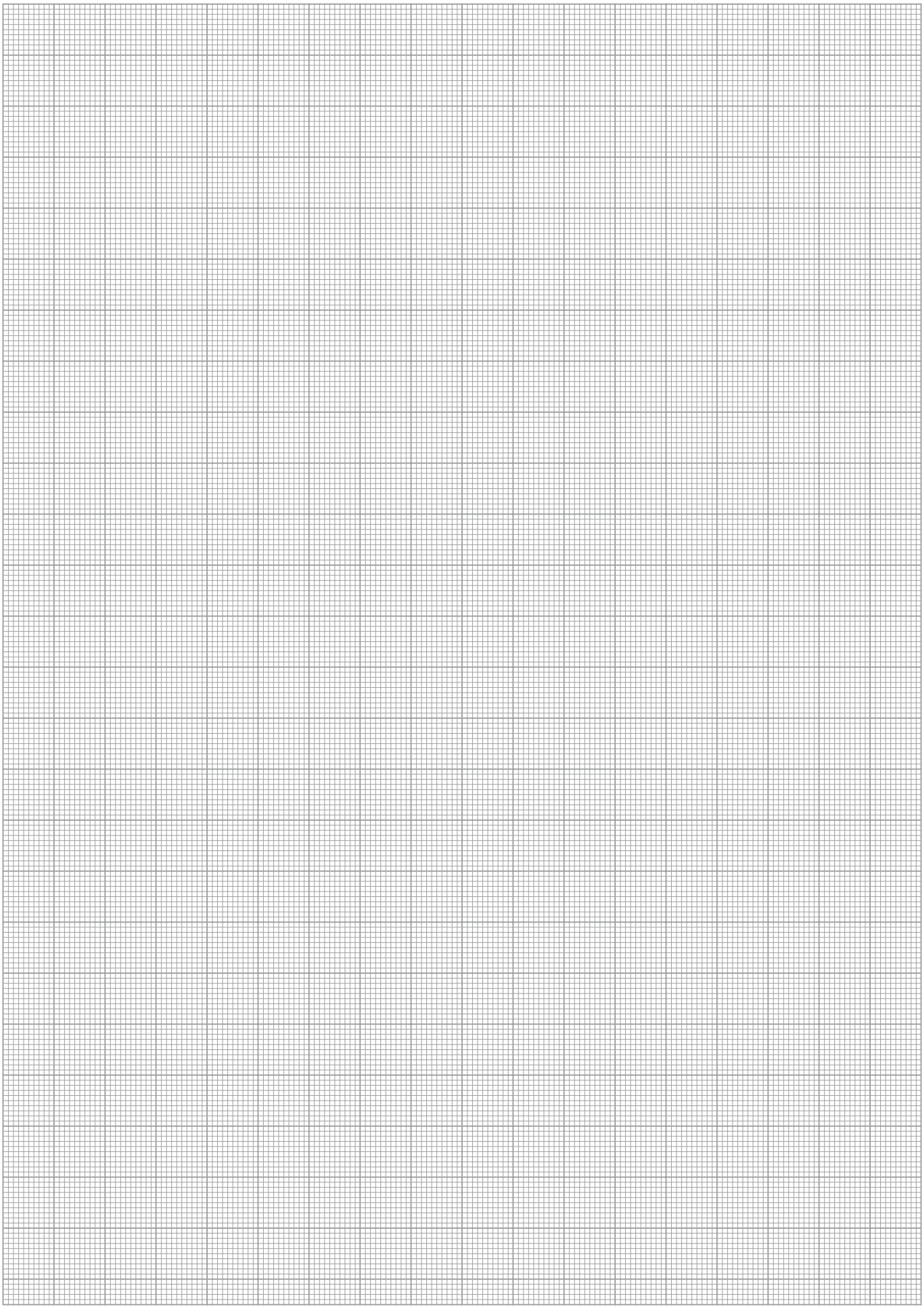

# MPG 50

**Pneumatic • 2-Finger Parallel Gripper • Gripper for small components**




## Gripping force, I.D. gripping

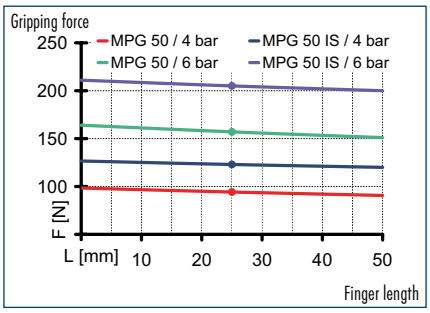


## Gripping force, O.D. gripping

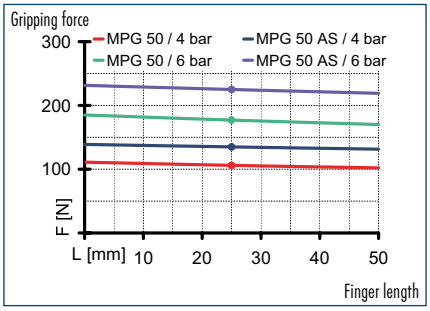


## Finger load

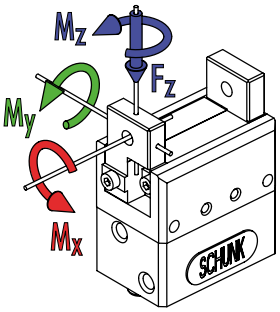


- $M_x$ max. 3.00 Nm
- $M_y$ max. 4.00 Nm
- $M_z$ max. 5.00 Nm
- $F_z$ max. 200.0 N

ⓘ The indicated moments and forces are static values, apply per base jaw and may occur simultaneously. $M_y$ may arise in addition to the moment generated by the gripping force itself. If the max. permitted finger weight is exceeded, it is imperative to throttle the air pressure so that the jaw movement occurs without any hitting or bouncing. Service life may be reduced.

## Technical data

| Description | | MPG 50 | MPG 50-AS | MPG 50-IS |
|---|---|---|---|---|
| ID | | 0340013 | 0340043 | 0340063 |
| Stroke per finger | [mm] | 8 | 8 | 8 |
| Closing force | [N] | 175 | 225 | |
| Opening force | [N] | 155 | | 190 |
| Min. spring force | [N] | | 50 | 35 |
| Weight | [kg] | 0.35 | 0.4 | 0.4 |
| Recommended workpiece weight | [kg] | 0.9 | 0.9 | 0.9 |
| Air consumption per double stroke | [cm³] | 11.33 | 19.98 | 16.6 |
| Min./max. operating pressure | [bar] | 2/8 | 4/6.5 | 4/6.5 |
| Nominal operating pressure | [bar] | 6 | 6 | 6 |
| Closing/opening time | [s] | 0.035/0.035 | 0.035/0.05 | 0.05/0.035 |
| Max. permitted finger length | [mm] | 50 | 50 | 50 |
| Max. permitted weight per finger | [kg] | 0.14 | 0.14 | 0.14 |
| IP class | | 30 | 30 | 30 |
| Min./max. ambient temperature | [°C] | -10/90 | -10/90 | -10/90 |
| Repeat accuracy | [mm] | 0.02 | 0.02 | 0.02 |
| Cleanroom class ISO-classification 14644-1 | | 5 | 5 | 5 |

## Main view

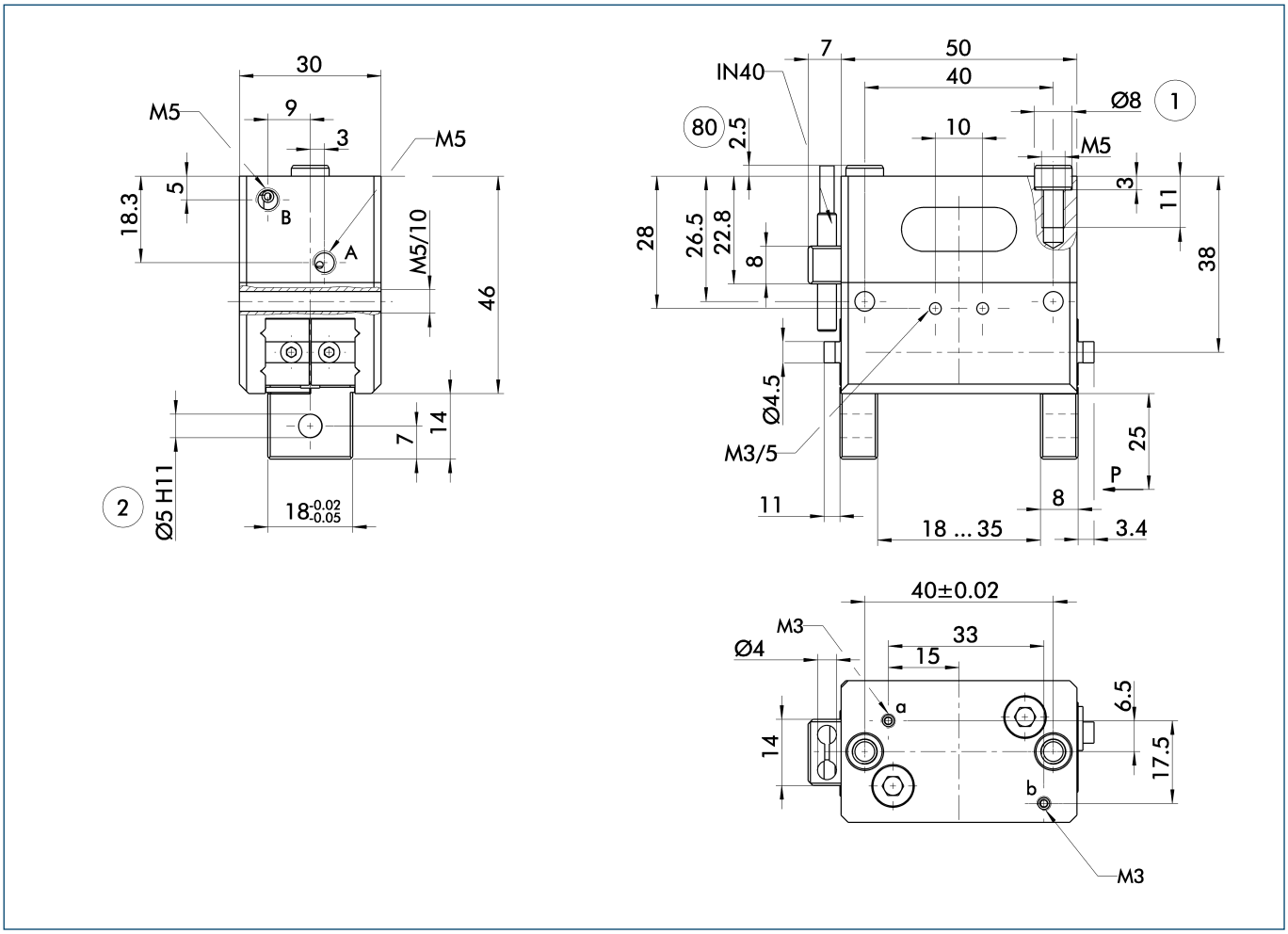


The drawing shows the gripper in the basic version with closed jaws, the dimensions do not include the options described below.

ⓘ The SDV-P pressure maintenance valve can also be used for I.D. or O.D. gripping alternatively or in addition to the spring-loaded, mechanical gripping force maintenance device (see "Accessories" catalog section).

A, a Main/direct connection, gripper opening
B, b Main/direct connection, gripper closing
① Gripper connection
② Finger connection
(80) Depth of the centering sleeve hole in the matching part

## Hose-free direct connection

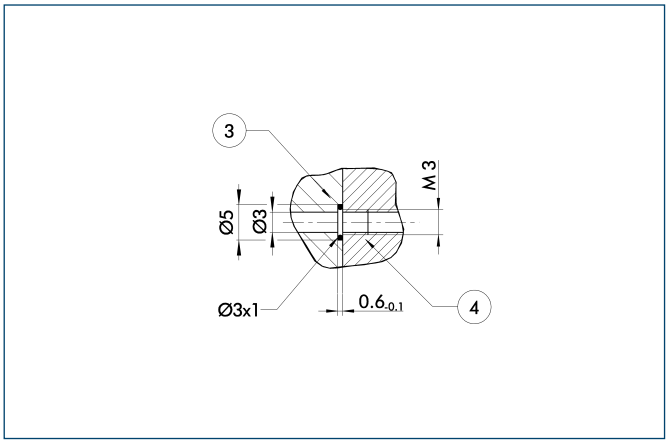


③ Adapter
④ Gripper

The direct connection is used for supplying compressed air without hoses. Instead, the pressure medium is fed through bore-holes in the mounting plate.

## AS/IS gripping force maintenance device

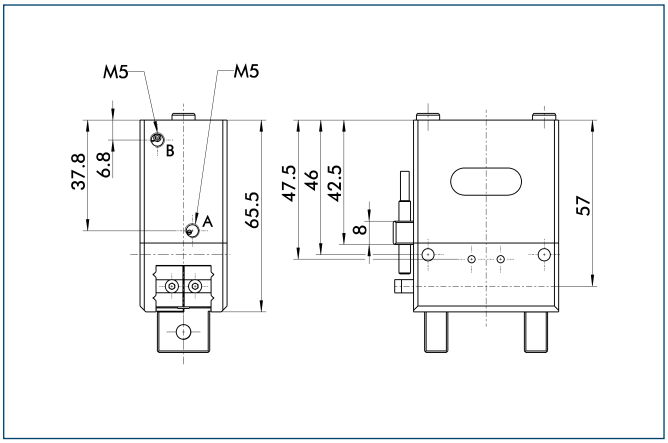


The mechanical gripping force maintenance device ensures a minimum gripping force even in case of pressure drop. This acts as closing force in the AS version, and as opening force in the IS version. In addition, the gripping force maintenance device can also be used for increasing the gripping force or for single-acting gripping.

## Modular Assembly Automation

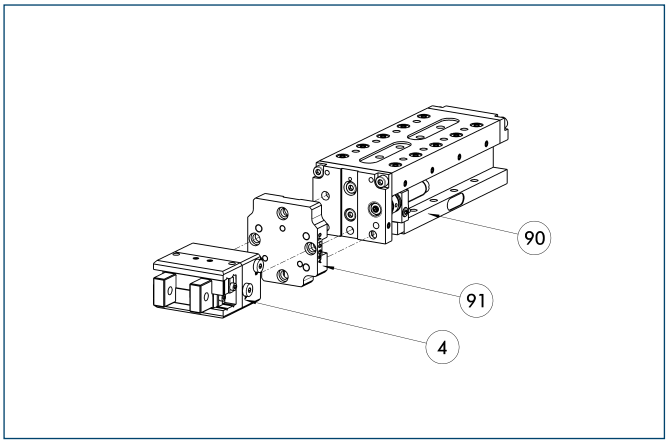


④ Gripper
⑨⓪ CLM
⑨① ASG

This gripper can be combined with the standard linear modules LM, KLM, CLM and ELM of the GEMOTEC modular system. For more information see our main catalog "Modular Assembly Automation".

## Finger blanks

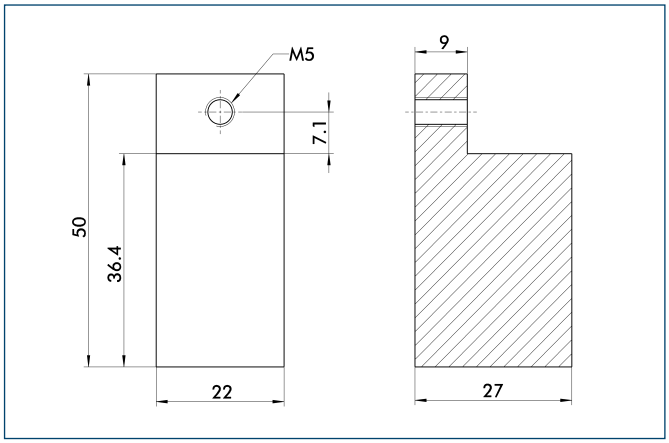


Finger blanks for customized subsequent machining

| Description | ID | Material | Scope of delivery |
|---|---|---|---|
| Finger blanks | | | |
| ABR 50 | **0340214** | Aluminum | 2 |

## Attachment valves

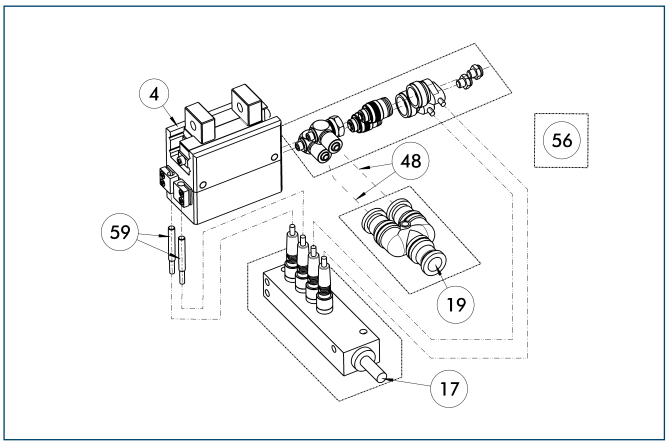


④ Gripper
⑰ Cable outlet
⑲ Air connection
④⑧ Hose
⑤⑥ Included in delivery
⑤⑨ Monitoring "gripping"

For each gripper one attachment valve ABV is required, optional with distributor for sensors and valves. Attachment valves increase the efficiency, reduce the installation work and air consumption and simplify air supply. For details please refer to the "Accessories" catalog section.

| Description | ID |
|---|---|
| Attachment valves | |
| ABV-MV15-M5 | **0303323** |
| ABV-MV15-M5-V2-M8 | **0303386** |
| ABV-MV15-M5-V4-M8 | **0303356** |
| ABV-MV15-M5-V8-M8 | **0303357** |

## Mounting kit for FPS

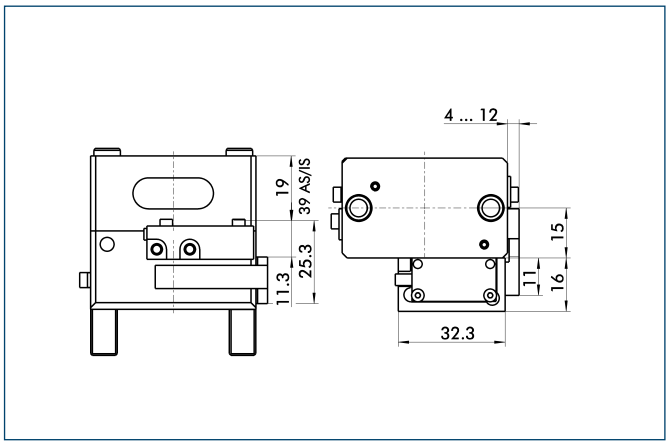


The FPS flexible position sensor can distinguish between five freely programmable ranges or switching points for the stroke of a gripper and can be used in conjunction with a PC as a measuring system.

| Description | ID |
|---|---|
| Mounting kit for FPS | |
| AS-MPG 50 | **0301763** |

You can find more detailed information and individual parts of the above-mentioned accessories in the "Accessories" catalog section.

## Inductive proximity switches

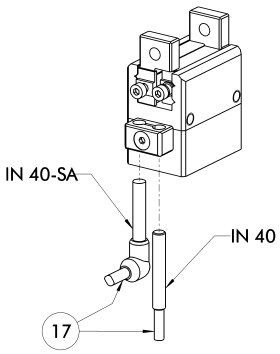


⑰ Cable outlet

End position monitoring for direct mounting

| Description | ID | Recommended product |
|---|---|---|
| Inductive proximity switches | | |
| IN 40-S-M8 | **0301474** | • |
| IN 40-S-M12 | **0301574** | |
| INK 40-S | **0301555** | |
| IN 40-S-M5-PNP | **0301491** | |
| IN 40-S-M5-NPN | **0301492** | |
| Inductive proximity switch with lateral outlet | | |
| IN 40-S-M12-SA | **0301577** | |
| IN 40-S-M8-SA | **0301473** | • |
| INK 40-S-SA | **0301565** | |
| Connection cables | | |
| KA BG05-L 3P-0300 | **0301652** | |
| KA BG08-L 3P-0300-PNP | **0301622** | |
| KA BG08-L 3P-0500-PNP | **0301623** | |
| KA BG12-L 3P-0500-PNP | **30016369** | |
| KA BW05-L 3P-0300 | **0301650** | |
| KA BW08-L 3P-0300-PNP | **0301594** | |
| KA BW08-L 3P-0500-PNP | **0301502** | |
| KA BW12-L 3P-0300-PNP | **0301503** | |
| KA BW12-L 3P-0500-PNP | **0301507** | |
| Cable extensions | | |
| KV BG12-SG12 3P-0030-PNP | **0301999** | |
| KV BG12-SG12 3P-0060-PNP | **0301998** | |
| KV BW08-SG08 3P-0030-PNP | **0301495** | |
| KV BW08-SG08 3P-0100-PNP | **0301496** | |
| KV BW08-SG08 3P-0200-PNP | **0301497** | |
| KV BW12-SG12 3P-0030-PNP | **0301595** | |
| KV BW12-SG12 3P-0100-PNP | **0301596** | |
| KV BW12-SG12 3P-0200-PNP | **0301597** | |

ⓘ Two sensors (closer/NO) are required for each gripper, plus extension cables as an option.

ⓘ Please note the minimum permitted bending radii for the sensor cables, which are generally 35 mm.

## Mounting kit for proximity switch

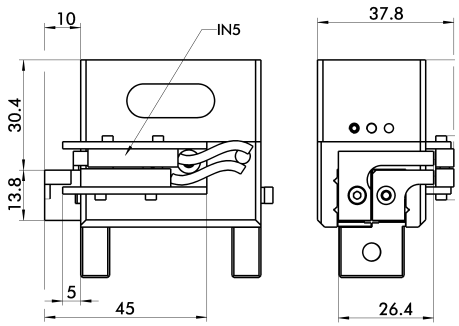


The mounting kit includes a bracket, switch cams and mounting screws. Proximity switches must be ordered separately.

| Description | ID |
|---|---|
| Mounting kit for proximity switch | |
| AS-MPG 50 | **0340153** |

ⓘ This mounting kit needs to be ordered optionally as an accessory.

You can find more detailed information and individual parts of the above-mentioned accessories in the “Accessories” catalog section.

## Inductive proximity switches

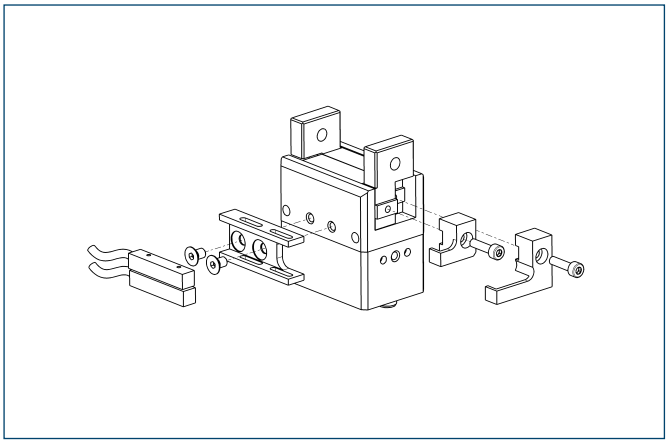

End position monitoring mounted with mounting kit

| Description | ID | Recommended product |
|---|---|---|
| Mounting kit for proximity switch | | |
| AS-MPG 50 | **0340153** | |
| Inductive proximity switches | | |
| IN 5-S-M8 | **0301469** | • |
| IN 5-S-M12 | **0301569** | |

ⓘ Two sensors (closer/NO) are required for each gripper, plus extension cables as an option.

ⓘ This mounting kit needs to be ordered optionally as an accessory.

ⓘ Please note the minimum permitted bending radii for the sensor cables, which are generally 35 mm.

## Flexible Position Sensor

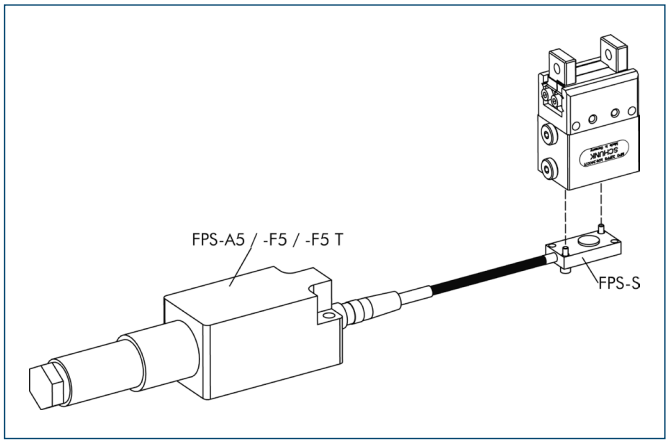


Flexible position monitoring of up to five positions

| Description | ID |
|---|---|
| Mounting kit for FPS | |
| AS-MPG 50 | **0301763** |
| Electronic Processor | |
| FPS-F5 | **0301805** |
| FPS-F5 T | **0301807** |
| Sensor | |
| FPS-S 13 | **0301705** |

ⓘ When using a FPS system, a FPS sensor (FPS-S) and a control unit (FPS-F5 / F5 T or A5) are required for each gripper as well as a mounting kit (AS), if listed. Cable extensions (KV) are available as options in the “Accessories” catalog section.

You can find more detailed information and individual parts of the above-mentioned accessories in the “Accessories” catalog section.

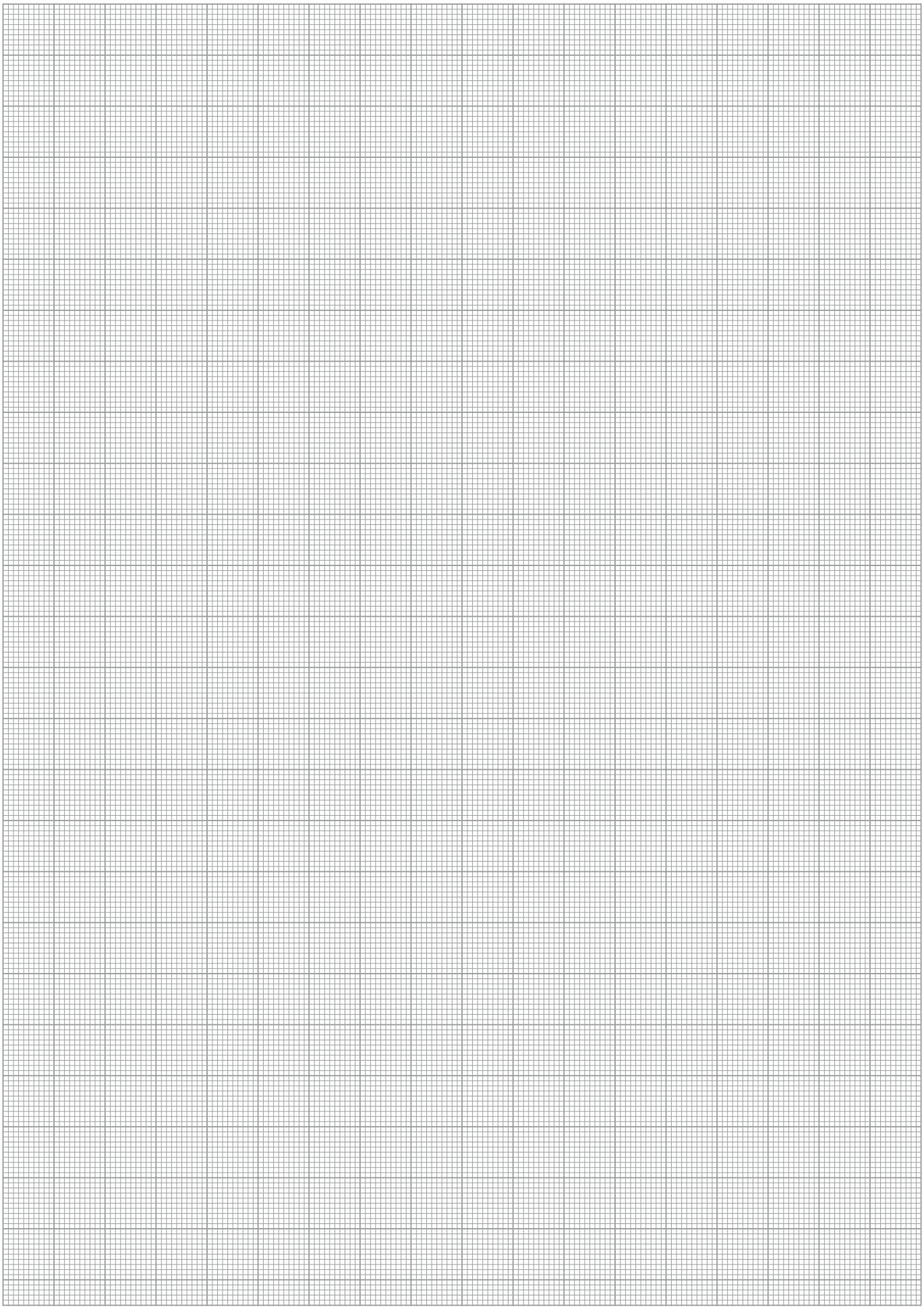

# MPG 64

**Pneumatic • 2-Finger Parallel Gripper • Gripper for small components**



## Gripping force, I.D. gripping

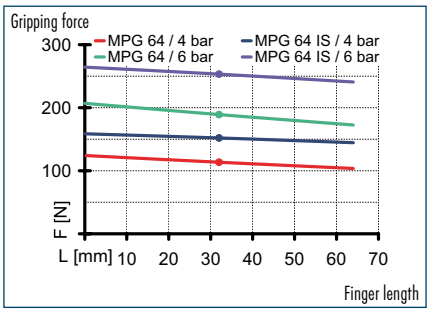


## Gripping force, O.D. gripping

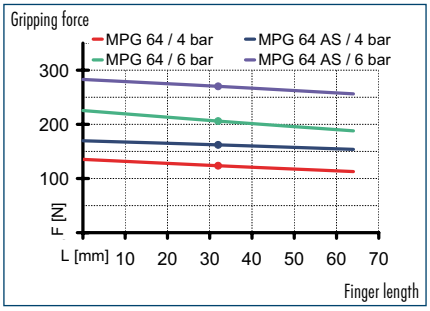


## Finger load

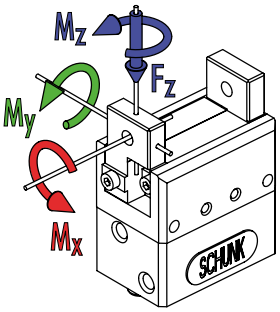


- $M_x$ max. 3.50 Nm
- $M_y$ max. 6.00 Nm
- $M_z$ max. 9.00 Nm
- $F_z$ max. 250.0 N

ⓘ The indicated moments and forces are static values, apply per base jaw and may occur simultaneously. $M_y$ may arise in addition to the moment generated by the gripping force itself. If the max. permitted finger weight is exceeded, it is imperative to throttle the air pressure so that the jaw movement occurs without any hitting or bouncing. Service life may be reduced.

## Technical data

| Description | | MPG 64 | MPG 64-AS | MPG 64-IS |
|---|---|---|---|---|
| **ID** | | **0340014** | **0340044** | **0340064** |
| Stroke per finger | [mm] | 10 | 10 | 10 |
| Closing force | [N] | 200 | 270 | |
| Opening force | [N] | 190 | | 245 |
| Min. spring force | [N] | | 70 | 55 |
| Weight | [kg] | 0.6 | 0.7 | 0.7 |
| Recommended workpiece weight | [kg] | 1 | 1 | 1 |
| Air consumption per double stroke | [cm³] | 18.85 | 28.58 | 26.6 |
| Min./max. operating pressure | [bar] | 2/8 | 4/6.5 | 4/6.5 |
| Nominal operating pressure | [bar] | 6 | 6 | 6 |
| Closing/opening time | [s] | 0.045/0.045 | 0.045/0.06 | 0.06/0.045 |
| Max. permitted finger length | [mm] | 64 | 64 | 64 |
| Max. permitted weight per finger | [kg] | 0.24 | 0.24 | 0.24 |
| IP class | | 30 | 30 | 30 |
| Min./max. ambient temperature | [°C] | -10/90 | -10/90 | -10/90 |
| Repeat accuracy | [mm] | 0.02 | 0.02 | 0.02 |
| Cleanroom class ISO-classification 14644-1 | | 5 | 5 | 5 |

## Main view

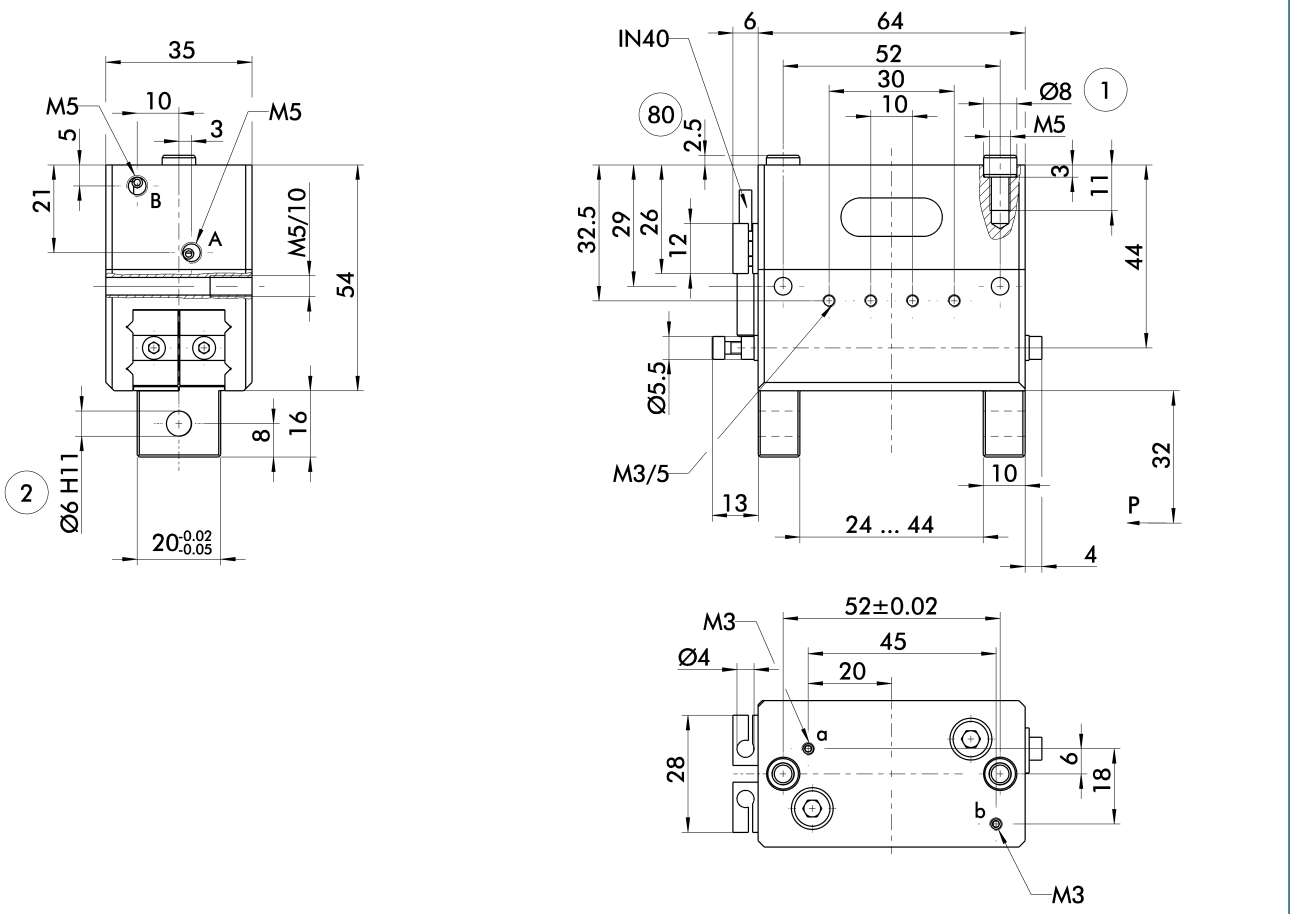


The drawing shows the gripper in the basic version with closed jaws, the dimensions do not include the options described below.

ⓘ The SDV-P pressure maintenance valve can also be used for I.D. or O.D. gripping alternatively or in addition to the spring-loaded, mechanical gripping force maintenance device (see "Accessories" catalog section).

A, a Main/direct connection, gripper opening
B, b Main/direct connection, gripper closing
① Gripper connection
② Finger connection
(80) Depth of the centering sleeve hole in the matching part

## Hose-free direct connection

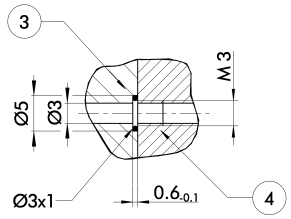


③ Adapter
④ Gripper

The direct connection is used for supplying compressed air without hoses. Instead, the pressure medium is fed through bore-holes in the mounting plate.

## AS/IS gripping force maintenance device

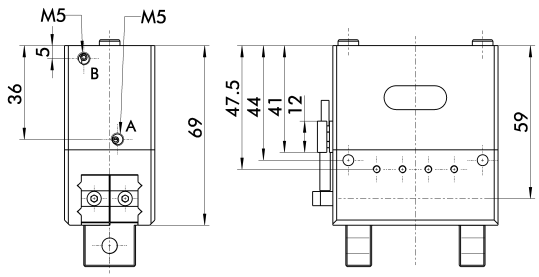


The mechanical gripping force maintenance device ensures a minimum gripping force even in case of pressure drop. This acts as closing force in the AS version, and as opening force in the IS version. In addition, the gripping force maintenance device can also be used for increasing the gripping force or for single-acting gripping.

## Modular Assembly Automation

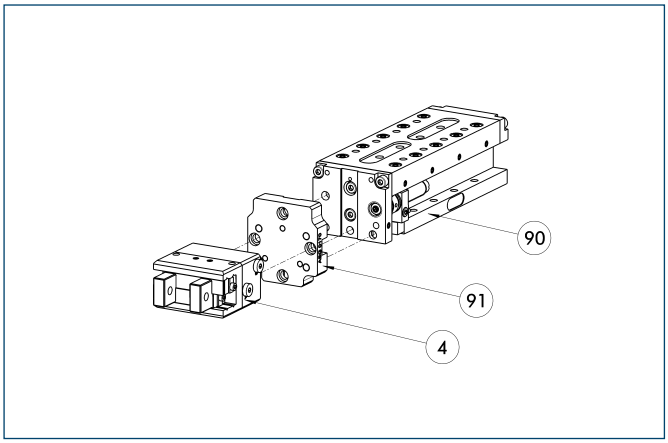


④ Gripper
⑨① ASG
⑨⓪ CLM

This gripper can be combined with the standard linear modules LM, KLM, CLM and ELM of the GEMOTEC modular system. For more information see our main catalog "Modular Assembly Automation".

## Finger blanks

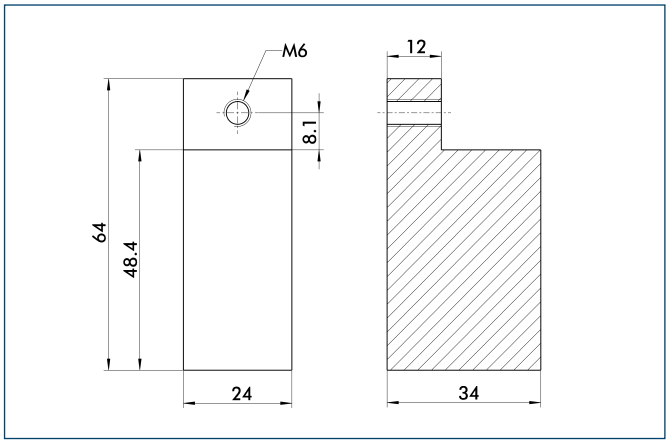


Finger blanks for customized subsequent machining

| Description | ID | Material | Scope of delivery |
|---|---|---|---|
| Finger blanks | | | |
| ABR 64 | **0340215** | Aluminum | 2 |

## Attachment valves

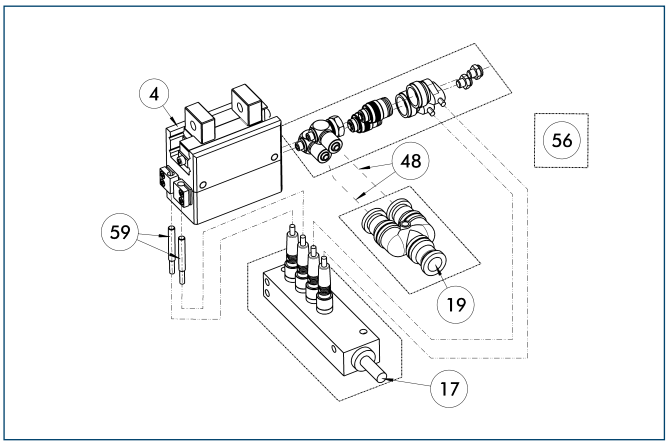


④ Gripper
⑰ Cable outlet
⑲ Air connection
④⑧ Hose
⑤⑥ Included in delivery
⑤⑨ Monitoring "gripping"

For each gripper one attachment valve ABV is required, optional with distributor for sensors and valves. Attachment valves increase the efficiency, reduce the installation work and air consumption and simplify air supply. For details please refer to the "Accessories" catalog section.

| Description | ID |
|---|---|
| Attachment valves | |
| ABV-MV25-M5 | **0303326** |
| ABV-MV25-M5-V2-M8 | **0303392** |
| ABV-MV25-M5-V4-M8 | **0303362** |
| ABV-MV25-M5-V8-M8 | **0303363** |

## Mounting kit for FPS

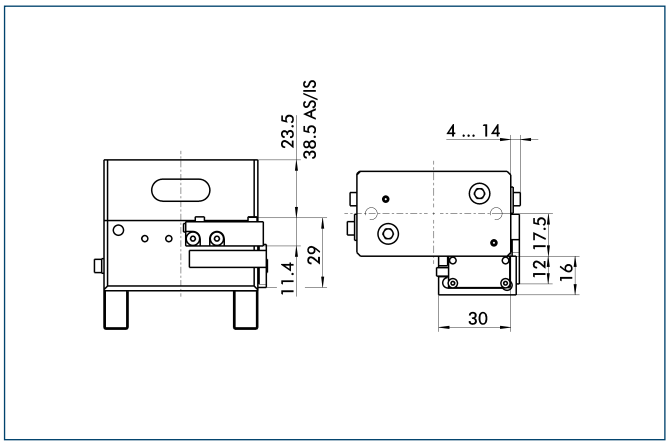


The FPS flexible position sensor can distinguish between five freely programmable ranges or switching points for the stroke of a gripper and can be used in conjunction with a PC as a measuring system.

| Description | ID |
|---|---|
| Mounting kit for FPS | |
| AS-MPG 64 | **0301764** |

You can find more detailed information and individual parts of the above-mentioned accessories in the "Accessories" catalog section.

## Inductive proximity switches

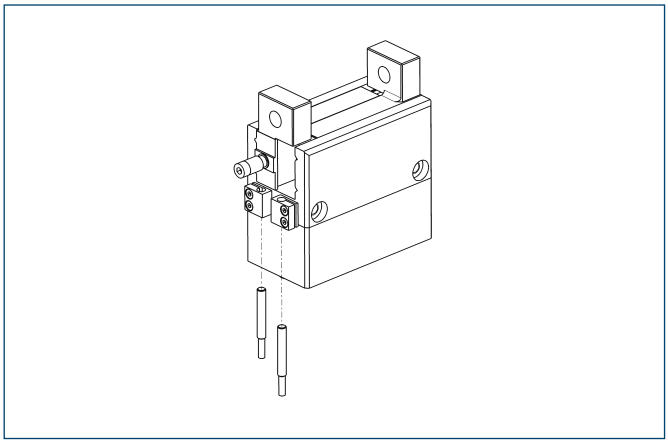

End position monitoring for direct mounting

| Description | ID | Recommended product |
|---|---|---|
| Inductive proximity switches | | |
| IN 40-S-M8 | **0301474** | • |
| IN 40-S-M12 | **0301574** | |
| INK 40-S | **0301555** | |
| IN 40-S-M5-PNP | **0301491** | |
| IN 40-S-M5-NPN | **0301492** | |
| Connection cables | | |
| KA BG05-L 3P-0300 | **0301652** | |
| KA BG08-L 3P-0300-PNP | **0301622** | |
| KA BG08-L 3P-0500-PNP | **0301623** | |
| KA BG12-L 3P-0500-PNP | **30016369** | |
| KA BW05-L 3P-0300 | **0301650** | |
| KA BW08-L 3P-0300-PNP | **0301594** | |
| KA BW08-L 3P-0500-PNP | **0301502** | |
| KA BW12-L 3P-0300-PNP | **0301503** | |
| KA BW12-L 3P-0500-PNP | **0301507** | |
| Cable extensions | | |
| KV BG12-SG12 3P-0030-PNP | **0301999** | |
| KV BG12-SG12 3P-0060-PNP | **0301998** | |
| KV BW08-SG08 3P-0030-PNP | **0301495** | |
| KV BW08-SG08 3P-0100-PNP | **0301496** | |
| KV BW08-SG08 3P-0200-PNP | **0301497** | |
| KV BW12-SG12 3P-0030-PNP | **0301595** | |
| KV BW12-SG12 3P-0100-PNP | **0301596** | |
| KV BW12-SG12 3P-0200-PNP | **0301597** | |

ⓘ Two sensors (closer/NO) are required for each gripper, plus extension cables as an option.

ⓘ Please note the minimum permitted bending radii for the sensor cables, which are generally 35 mm.

## Mounting kit for proximity switch

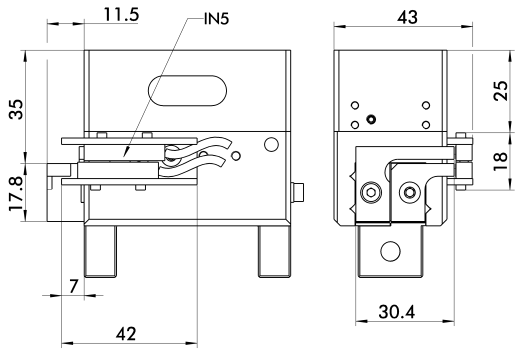


The mounting kit includes a bracket, switch cams and mounting screws. Proximity switches must be ordered separately.

| Description | ID |
|---|---|
| Mounting kit for proximity switch | |
| AS-MPG 64 | **0340154** |

ⓘ This mounting kit needs to be ordered optionally as an accessory.

You can find more detailed information and individual parts of the above-mentioned accessories in the “Accessories” catalog section.

## Inductive proximity switches

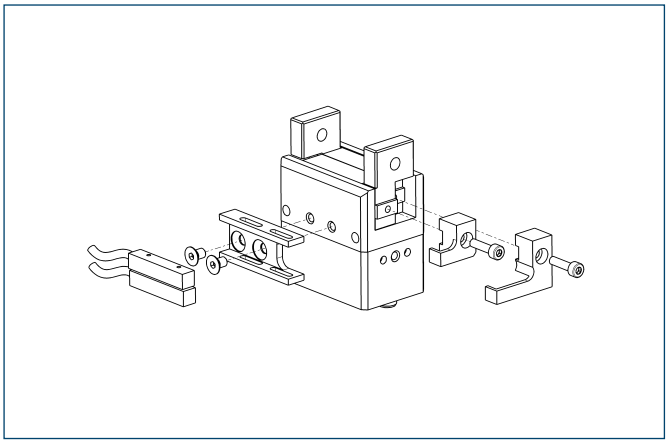

End position monitoring mounted with mounting kit

| Description | ID | Recommended product |
|---|---|---|
| Mounting kit for proximity switch | | |
| AS-MPG 64 | **0340154** | |
| Inductive proximity switches | | |
| IN 5-S-M8 | **0301469** | • |
| IN 5-S-M12 | **0301569** | |

ⓘ Two sensors (closer/NO) are required for each gripper, plus extension cables as an option.
ⓘ This mounting kit needs to be ordered optionally as an accessory.
ⓘ Please note the minimum permitted bending radii for the sensor cables, which are generally 35 mm.

## Flexible Position Sensor

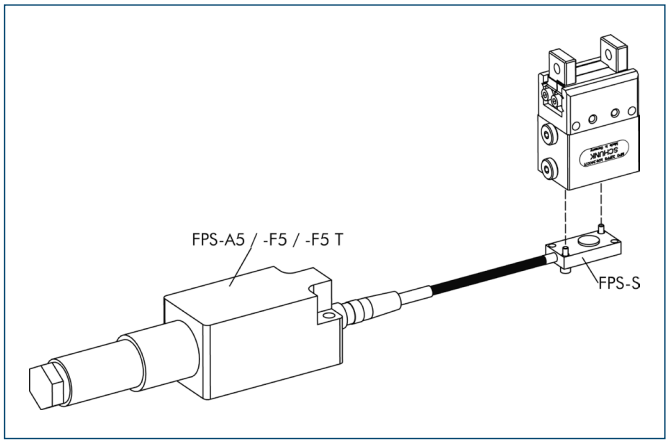


Flexible position monitoring of up to five positions

| Description | ID |
|---|---|
| Mounting kit for RSS | |
| AS-MPG 64 | **0301764** |
| Electronic Processor | |
| FPS-F5 | **0301805** |
| FPS-F5 T | **0301807** |
| Sensor | |
| FPS-S 13 | **0301705** |

ⓘ When using a FPS system, a FPS sensor (FPS-S) and a control unit (FPS-F5 / F5 T or A5) are required for each gripper as well as a mounting kit (AS), if listed. Cable extensions (KV) are available as options in the “Accessories” catalog section.

You can find more detailed information and individual parts of the above-mentioned accessories in the “Accessories” catalog section.

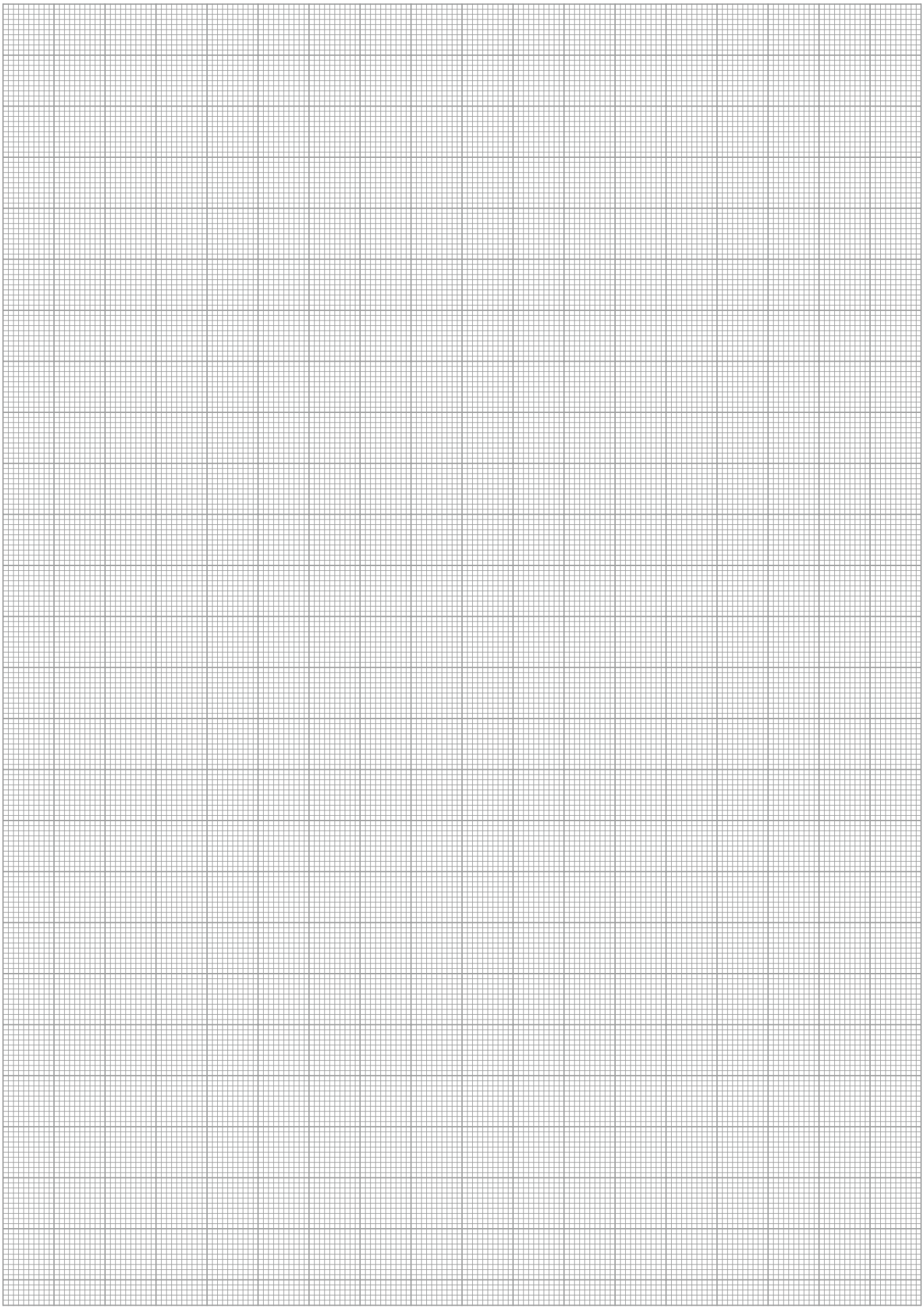

# MPG 80

**Pneumatic • 2-Finger Parallel Gripper • Gripper for small components**




## Gripping force, I.D. gripping

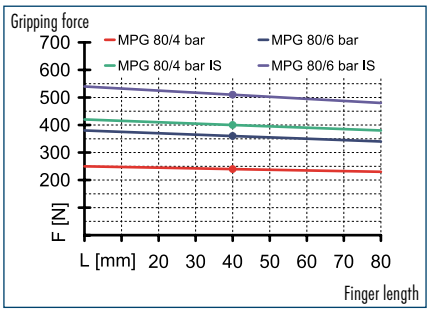


## Gripping force, O.D. gripping

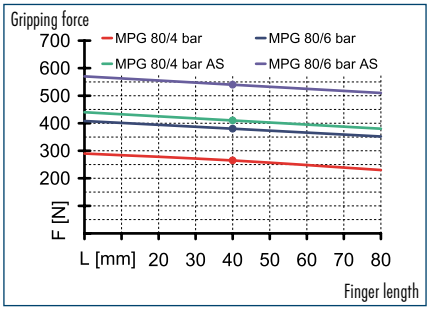


## Finger load

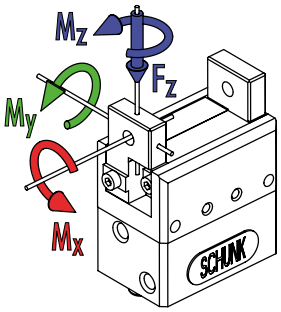


- $M_x$ max. 5.00 Nm
- $M_y$ max. 9.00 Nm
- $M_z$ max. 15.00 Nm
- $F_z$ max. 500.0 N

ⓘ The indicated moments and forces are static values, apply per base jaw and may occur simultaneously. $M_y$ may arise in addition to the moment generated by the gripping force itself. If the max. permitted finger weight is exceeded, it is imperative to throttle the air pressure so that the jaw movement occurs without any hitting or bouncing. Service life may be reduced.

## Technical data

| Description | | MPG 80 | MPG 80-AS | MPG 80-IS |
|---|---|---|---|---|
| **ID** | | **0340015** | **0340045** | **0340065** |
| Stroke per finger | [mm] | 14 | 14 | 14 |
| Closing force | [N] | 380 | 540 | |
| Opening force | [N] | 360 | | 510 |
| Min. spring force | [N] | | 160 | 150 |
| Weight | [kg] | 1.2 | 1.35 | 1.35 |
| Recommended workpiece weight | [kg] | 1.9 | 1.9 | 1.9 |
| Air consumption per double stroke | [cm³] | 29.3 | 61.4 | 57.1 |
| Min./max. operating pressure | [bar] | 2/8 | 4/6.5 | 4/6.5 |
| Nominal operating pressure | [bar] | 6 | 6 | 6 |
| Closing/opening time | [s] | 0.06/0.06 | 0.055/0.085 | 0.085/0.055 |
| Max. permitted finger length | [mm] | 80 | 80 | 80 |
| Max. permitted weight per finger | [kg] | 0.4 | 0.4 | 0.4 |
| IP class | | 30 | 30 | 30 |
| Min./max. ambient temperature | [°C] | -10/90 | -10/90 | -10/90 |
| Repeat accuracy | [mm] | 0.02 | 0.02 | 0.02 |
| Cleanroom class ISO-classification 14644-1 | | 5 | 5 | 5 |

## Main view

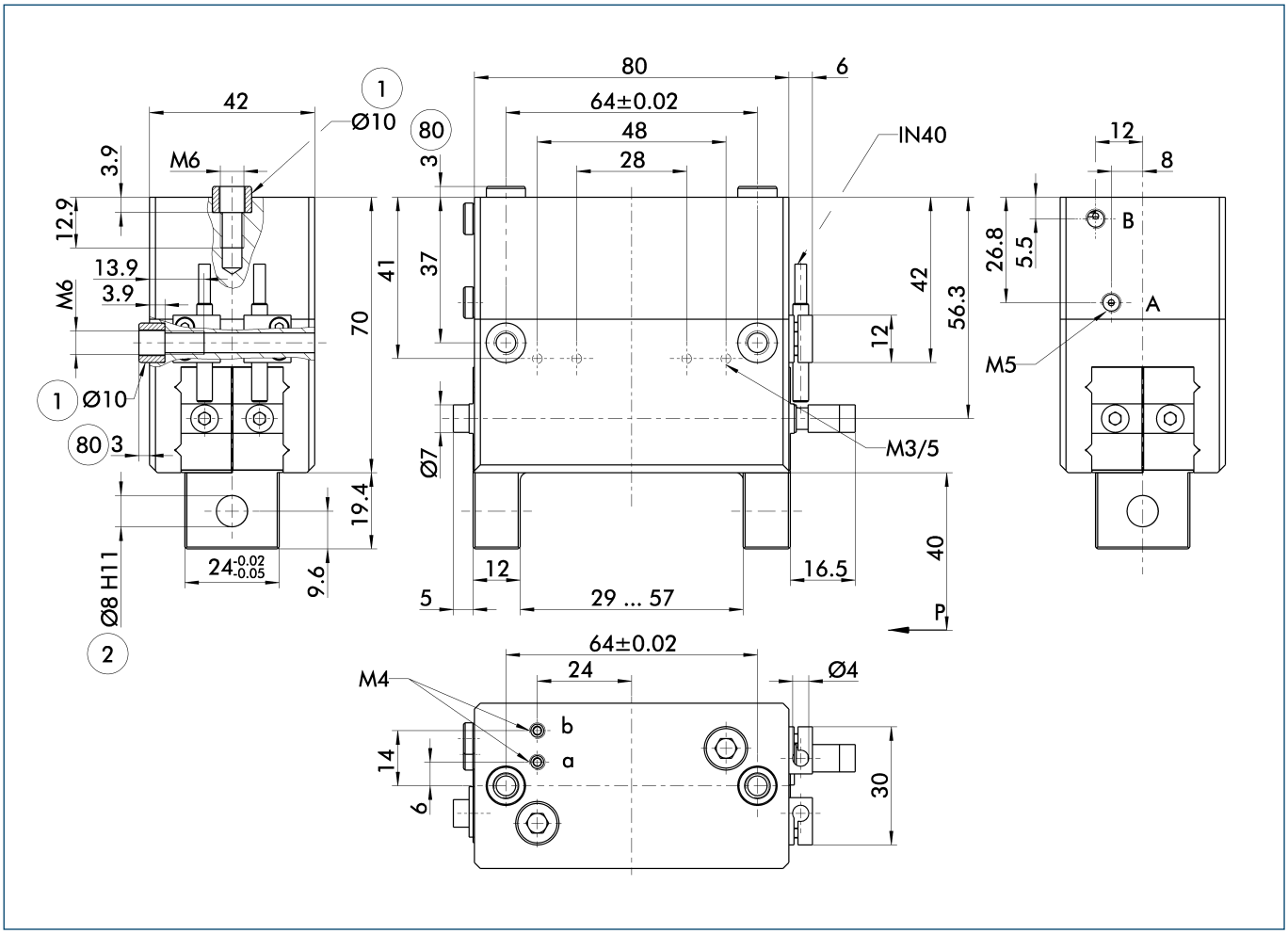


The drawing shows the gripper in the basic version with closed jaws, the dimensions do not include the options described below.

ⓘ The SDV-P pressure maintenance valve can also be used for I.D. or O.D. gripping alternatively or in addition to the spring-loaded, mechanical gripping force maintenance device (see "Accessories" catalog section).

A, a Main/direct connection, gripper opening
B, b Main/direct connection, gripper closing
① Gripper connection
② Finger connection
(80) Depth of the centering sleeve hole in the matching part

## Hose-free direct connection

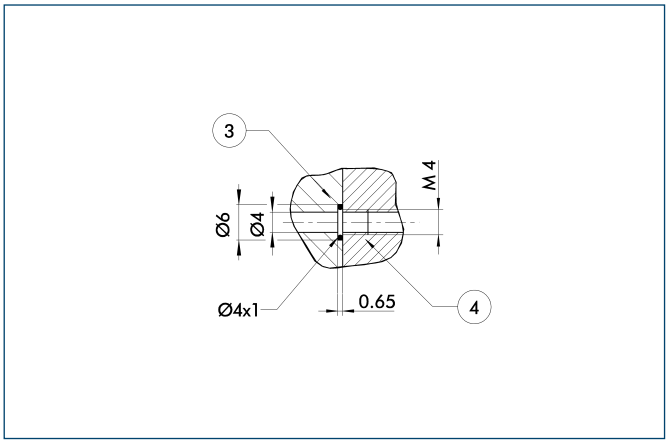


③ Adapter
④ Gripper

The direct connection is used for supplying compressed air without hoses. Instead, the pressure medium is fed through bore-holes in the mounting plate.

## AS/IS gripping force maintenance device

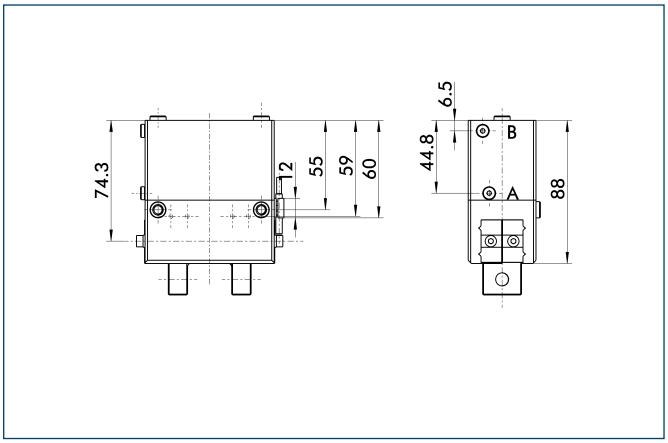


The mechanical gripping force maintenance device ensures a minimum gripping force even in case of pressure drop. This acts as closing force in the AS version, and as opening force in the IS version. In addition, the gripping force maintenance device can also be used for increasing the gripping force or for single-acting gripping.

## Modular Assembly Automation

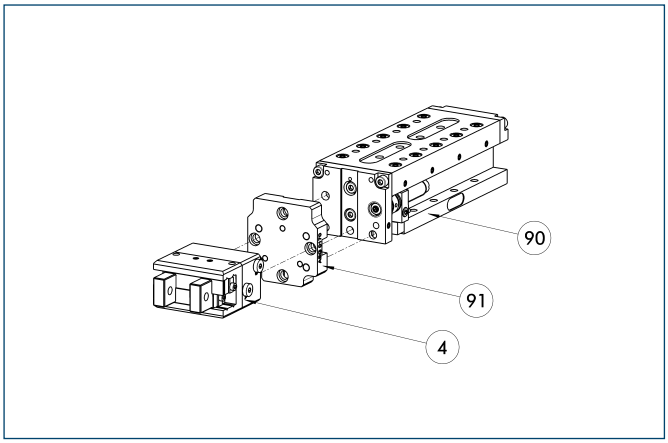


④ Gripper
⑨⓪ CLM
⑨① ASG

This gripper can be combined with the standard linear modules LM, KLM, CLM and ELM of the GEMOTEC modular system. For more information see our main catalog "Modular Assembly Automation".

## Finger blanks

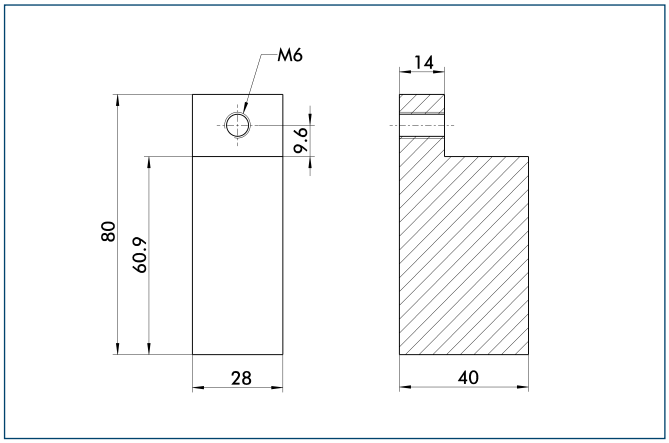


Finger blanks for customized subsequent machining

| Description | ID | Material | Scope of delivery |
|---|---|---|---|
| Finger blanks | | | |
| ABR 80 | **0340216** | Aluminum | 2 |

## Attachment valves

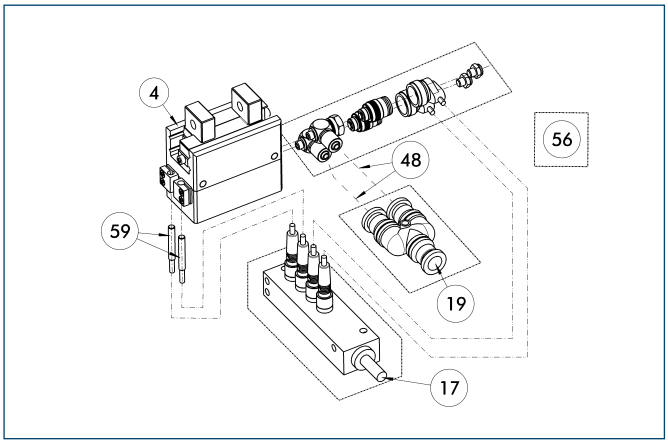


④ Gripper
⑰ Cable outlet
⑲ Air connection
④⑧ Hose
⑤⑥ Included in delivery
⑤⑨ Monitoring "gripping"

For each gripper one attachment valve ABV is required, optional with distributor for sensors and valves. Attachment valves increase the efficiency, reduce the installation work and air consumption and simplify air supply. For details please refer to the "Accessories" catalog section.

| Description | ID |
|---|---|
| Attachment valves | |
| ABV-MV25-M5 | **0303326** |
| ABV-MV25-M5-V2-M8 | **0303392** |
| ABV-MV25-M5-V4-M8 | **0303362** |
| ABV-MV25-M5-V8-M8 | **0303363** |

## Mounting kit for FPS

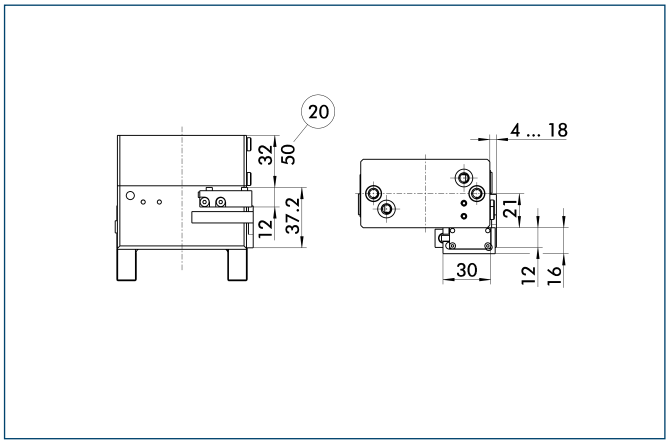


⑳ For AS / IS version

The FPS flexible position sensor can distinguish between five freely programmable ranges or switching points for the stroke of a gripper and can be used in conjunction with a PC as a measuring system.

| Description | ID |
|---|---|
| Mounting kit for FPS | |
| AS-MPG 80 | **0301765** |

You can find more detailed information and individual parts of the above-mentioned accessories in the "Accessories" catalog section.

## Inductive proximity switches

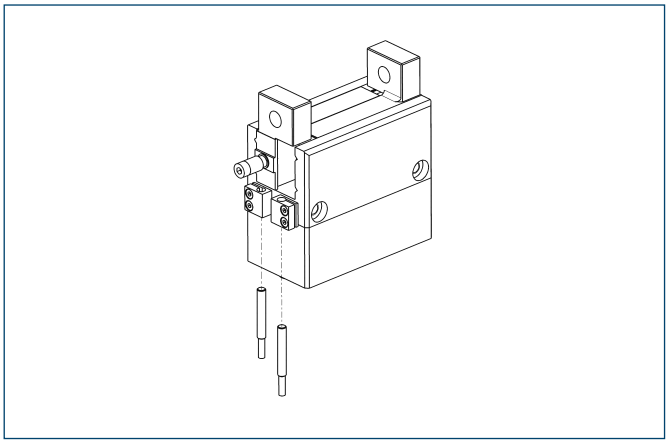

End position monitoring for direct mounting

| Description | ID | Recommended product |
|---|---|---|
| Inductive proximity switches | | |
| IN 40-S-M8 | **0301474** | • |
| IN 40-S-M12 | **0301574** | |
| INK 40-S | **0301555** | |
| IN 40-S-M5-PNP | **0301491** | |
| IN 40-S-M5-NPN | **0301492** | |
| Connection cables | | |
| KA BG05-L 3P-0300 | **0301652** | |
| KA BG08-L 3P-0300-PNP | **0301622** | |
| KA BG08-L 3P-0500-PNP | **0301623** | |
| KA BG12-L 3P-0500-PNP | **30016369** | |
| KA BW05-L 3P-0300 | **0301650** | |
| KA BW08-L 3P-0300-PNP | **0301594** | |
| KA BW08-L 3P-0500-PNP | **0301502** | |
| KA BW12-L 3P-0300-PNP | **0301503** | |
| KA BW12-L 3P-0500-PNP | **0301507** | |
| Cable extensions | | |
| KV BG12-SG12 3P-0030-PNP | **0301999** | |
| KV BG12-SG12 3P-0060-PNP | **0301998** | |
| KV BW08-SG08 3P-0030-PNP | **0301495** | |
| KV BW08-SG08 3P-0100-PNP | **0301496** | |
| KV BW08-SG08 3P-0200-PNP | **0301497** | |
| KV BW12-SG12 3P-0030-PNP | **0301595** | |
| KV BW12-SG12 3P-0100-PNP | **0301596** | |
| KV BW12-SG12 3P-0200-PNP | **0301597** | |

ⓘ Two sensors (closer/NO) are required for each gripper, plus extension cables as an option.

ⓘ Please note the minimum permitted bending radii for the sensor cables, which are generally 35 mm.

## Mounting kit for proximity switch

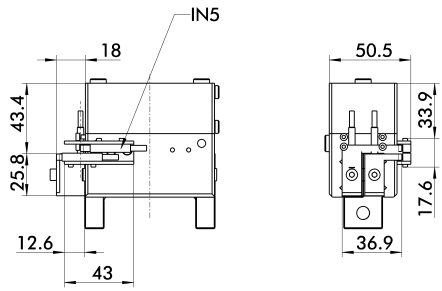


The mounting kit includes a bracket, switch cams and mounting screws. Proximity switches must be ordered separately.

| Description | ID |
|---|---|
| Mounting kit for proximity switch | |
| AS-MPG 80 | **0340155** |

ⓘ This mounting kit needs to be ordered optionally as an accessory.

You can find more detailed information and individual parts of the above-mentioned accessories in the “Accessories” catalog section.

## Inductive proximity switches

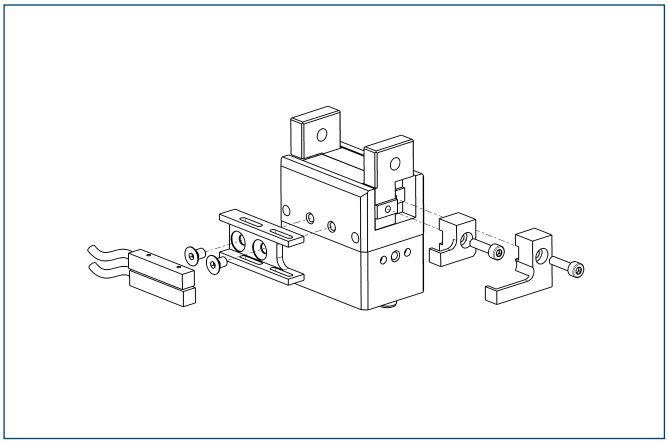

End position monitoring mounted with mounting kit

| Description | ID | Recommended product |
|---|---|---|
| Mounting kit for proximity switch | | |
| AS-MPG 80 | **0340155** | |
| Inductive proximity switches | | |
| IN 5-S-M8 | **0301469** | • |
| IN 5-S-M12 | **0301569** | |

ⓘ Two sensors (closer/NO) are required for each gripper, plus extension cables as an option.
ⓘ This mounting kit needs to be ordered optionally as an accessory.
ⓘ Please note the minimum permitted bending radii for the sensor cables, which are generally 35 mm.

## Flexible Position Sensor

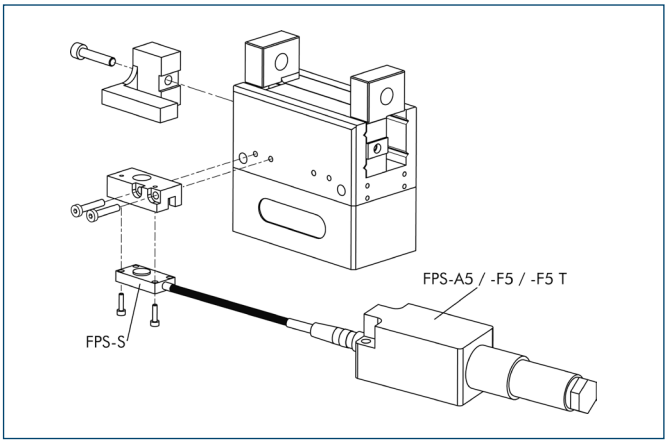


Flexible position monitoring of up to five positions

| Description | ID |
|---|---|
| Mounting kit for FPS | |
| AS-MPG 80 | **0301765** |
| Electronic Processor | |
| FPS-F5 | **0301805** |
| FPS-F5 T | **0301807** |
| Sensor | |
| FPS-S 13 | **0301705** |

ⓘ When using a FPS system, a FPS sensor (FPS-S) and a control unit (FPS-F5 / F5 T or A5) are required for each gripper as well as a mounting kit (AS), if listed. Cable extensions (KV) are available as options in the “Accessories” catalog section.

You can find more detailed information and individual parts of the above-mentioned accessories in the “Accessories” catalog section.

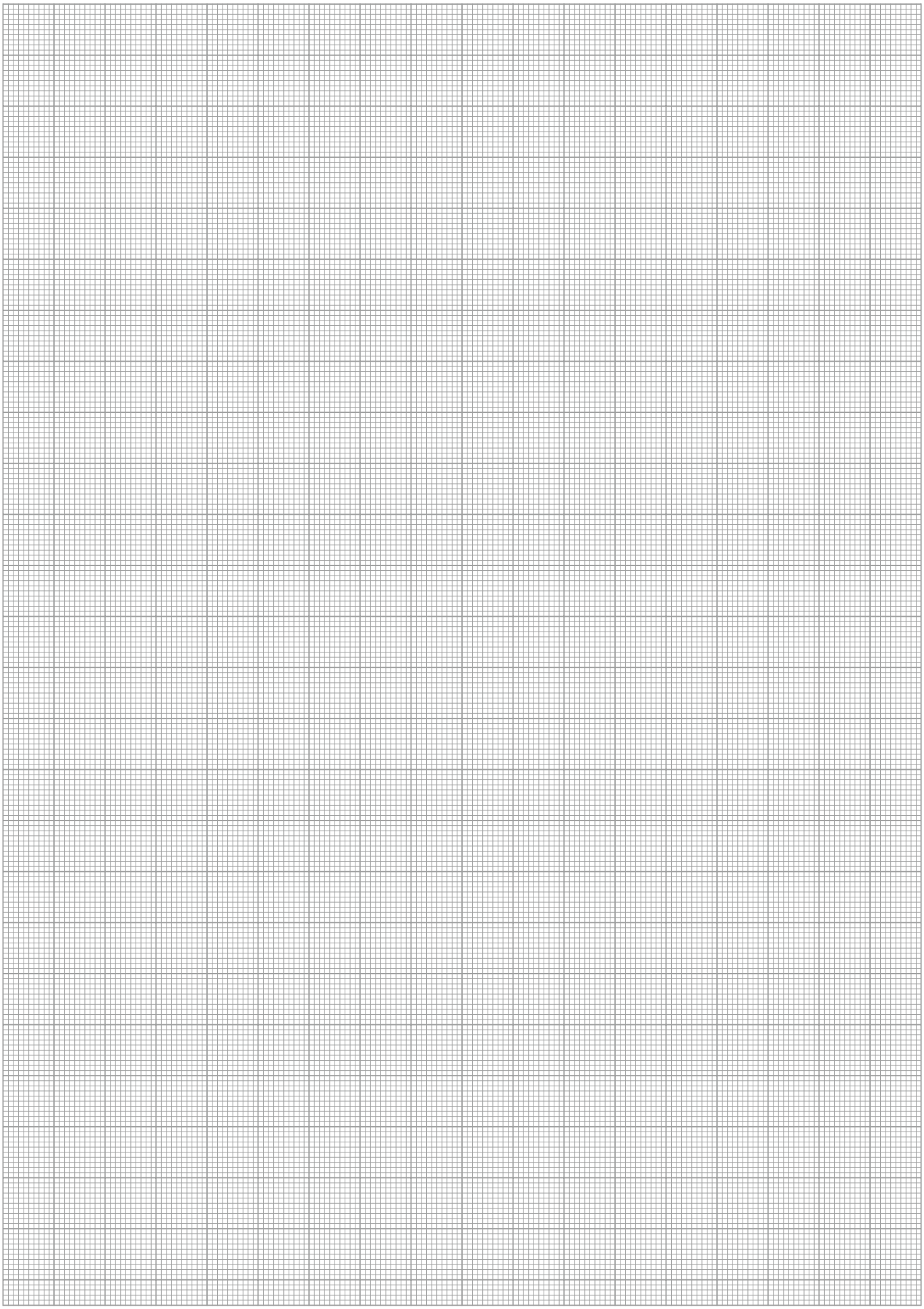

# KTG

**Pneumatic • 2-Finger Parallel Gripper • Gripper for small components**

**Size**
50

**Weight**
0.08 kg

**Gripping force**
13 N

**Stroke per finger**
4.5 mm

**Workpiece weight**
0.07 kg

## Application example

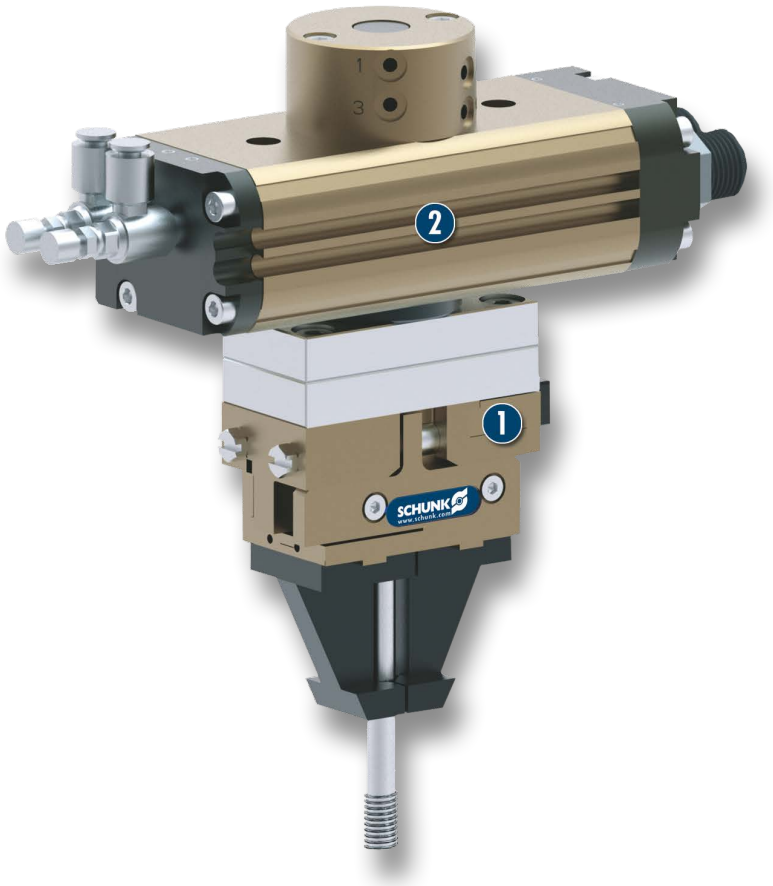


Rotary gripper module for small components

1 KTG 2-Finger Parallel Gripper with workpiece-specific fingers

2 SRU-mini Miniature Rotary Unit

## Gripper for small components

2-Finger Parallel Gripper with center bore

## Field of application

Gripping and moving of small to medium-sized workpieces in low contaminated environments, equipped with end-to-end center bore for workpiece feeding, sensor systems or actuators




## Your advantages and benefits

**Low weight**
for weight-reduced handling solutions

**Large stroke**
in proportion to size

**Base jaws guided on roller bearings**
for precise gripping

**Center through-hole**
for workpiece feeding, sensor systems or actuators

**Air supply via hose-free direct connection or screw connections**
for the flexible supply of compressed air in all automation systems

## General note to the series

**Principle of function**
synchronized double piston

**Housing material**
Aluminum alloy, hard-anodized

**Base jaw material**
Aluminum alloy, hard-anodized

**Actuation**
pneumatic, with filtered compressed air (10 microns): dry, lubricated or non-lubricated
Pressure medium: Required quality class of compressed air according to DIN ISO 8573-1: 6 4 4

**Warranty**
24 months (details, general terms and conditions and operation manuals can be downloaded under www.schunk.com)

**Scope of delivery**
Brackets for proximity switches, centering sleeves, O-rings for direct connection, assembly and operating manual with manufacturer's declaration

**Gripping force maintenance device**
possible with SDV-P pressure maintenance valve

## Sectional diagram

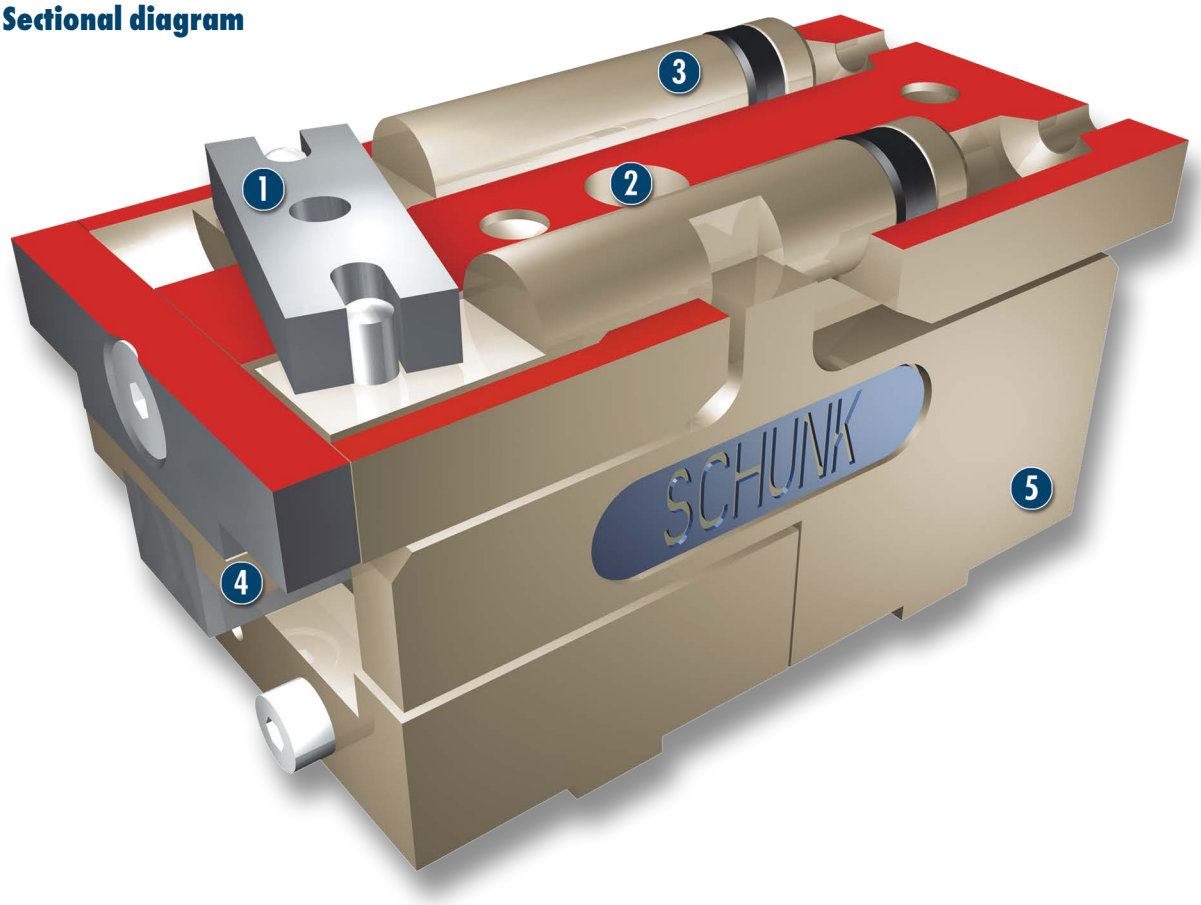


**1 Kinematics**
synchronization using lever principle for centric clamping

**2 Center bore**
for workpiece feeding, for sensor systems, actuators (ejectors) or optical workpiece recognition

**3 Drive**
through pneumatic double piston system

**4 Roller guide**
precise gripping through base jaw guide with minimum play

**5 Housing**
weight-optimized through application of hard-anodized, high-strength aluminum alloy

## Functional description

By pressurizing the first or second piston, the base jaws which are individually guided by a carrier on the piston, are moved.
The movement is synchronized by means of lever kinematics.

## Options and special information

Available with reinforced jaw guidances on request. Gripping force can be maintained by the SDV-P pressure maintenance valve.

## Accessories

Accessories from SCHUNK – the suitable supplement for maximum functionality, reliability and performance of all automation modules.

### Centering sleeves



### Fittings



### Sensor system



### Sensor cables



### Carbide clamping inserts



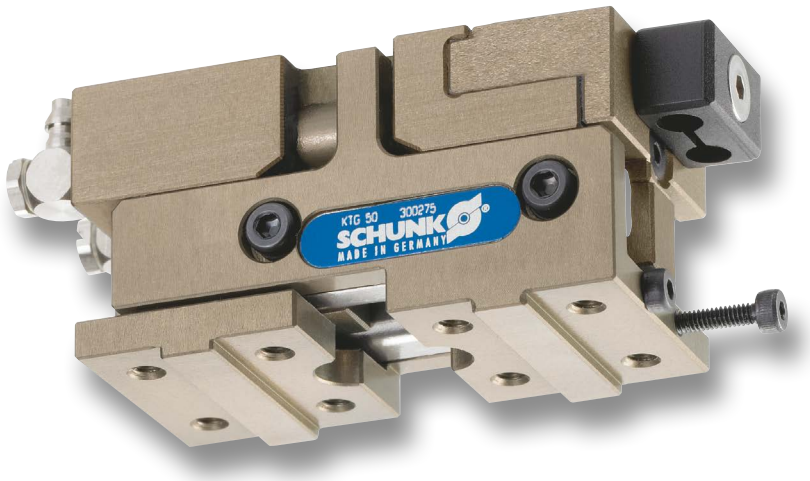


### Sensor Distributor

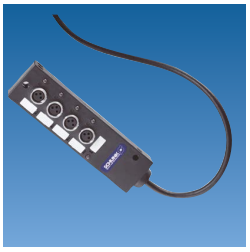

### Plastic inserts



### Finger blanks



### Gripper pads

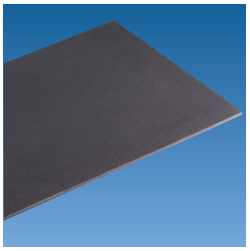

### Pressure maintenance valve



ⓘ For the exact size of the required accessories, availability of this size and the designation and ID, please refer to the additional views at the end of the size in question. You will find more detailed information on our accessory range in the “Accessories” catalog section.

## General note to the series

**Gripping force**
is the arithmetic total of the gripping force applied to each finger at distance P (see illustration) measured from the upper edge of the gripper.

**Finger length**
The finger length is measured from the upper edge of the gripper housing in the direction of the main axis.

**Repeat accuracy**
is defined as the spread of the limit position after 100 consecutive strokes.

**Workpiece weight**
The recommended workpiece weight is calculated for a force-type connection with a coefficient of friction of 0.1 and a safety factor of 2 against slippage of the workpiece on acceleration due to gravity g. Considerably heavier workpiece weights are permitted with form-fit gripping.

**Closing and opening times**
Closing and opening times are purely the times that the base jaws or fingers are in motion. Valve switching times, hose filling times or PLC reaction times are not included in the above times and must be taken into consideration when determining cycle times.

# KTG 50

**Pneumatic • 2-Finger Parallel Gripper • Gripper for small components**

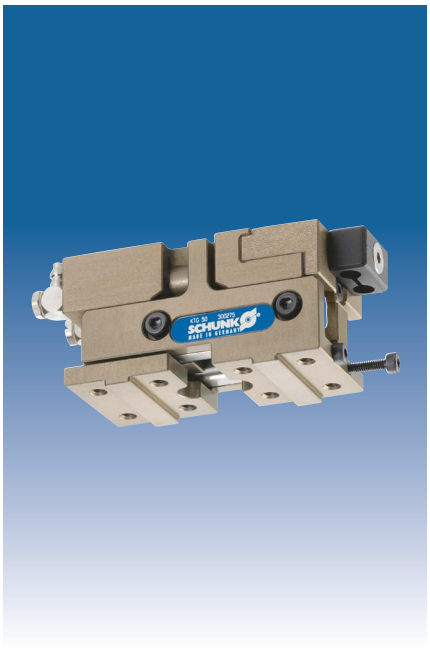

## Gripping force

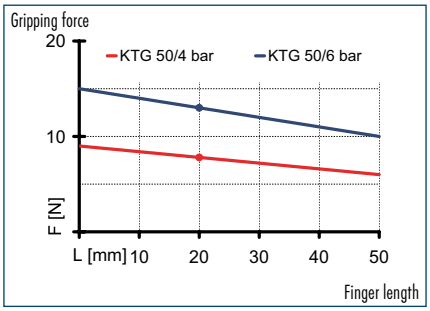


ⓘ The gripping force diagram applies for I.D. and O.D. gripping.

## Finger load

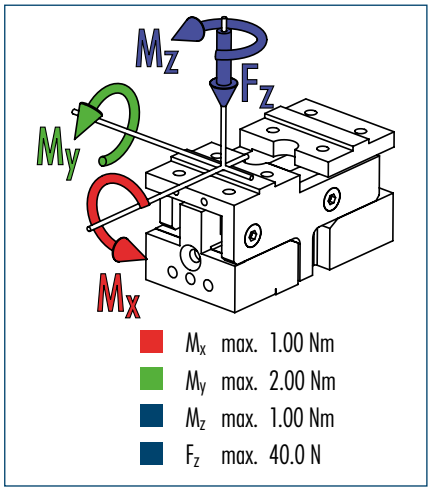


ⓘ The indicated moments and forces are static values, apply per base jaw and may occur simultaneously. $M_y$ may arise in addition to the moment generated by the gripping force itself. If the max. permitted finger weight is exceeded, it is imperative to throttle the air pressure so that the jaw movement occurs without any hitting or bouncing. Service life may be reduced.

## Technical data

| Description | | KTG 50 |
|---|---|---|
| **ID** | | **0300275** |
| Stroke per finger | [mm] | 4.5 |
| Closing force | [N] | 13 |
| Opening force | [N] | 13 |
| Weight | [kg] | 0.08 |
| Recommended workpiece weight | [kg] | 0.07 |
| Air consumption per double stroke | [cm³] | 0.23 |
| Min./max. operating pressure | [bar] | 1/7 |
| Nominal operating pressure | [bar] | 6 |
| Closing/opening time | [s] | 0.05/0.05 |
| Max. permitted finger length | [mm] | 50 |
| Max. permitted weight per finger | [kg] | 0.04 |
| IP class | | 20 |
| Min./max. ambient temperature | [°C] | -10/90 |
| Repeat accuracy | [mm] | 0.02 |
| Diameter of center bore | [mm] | 5 |

## Main view

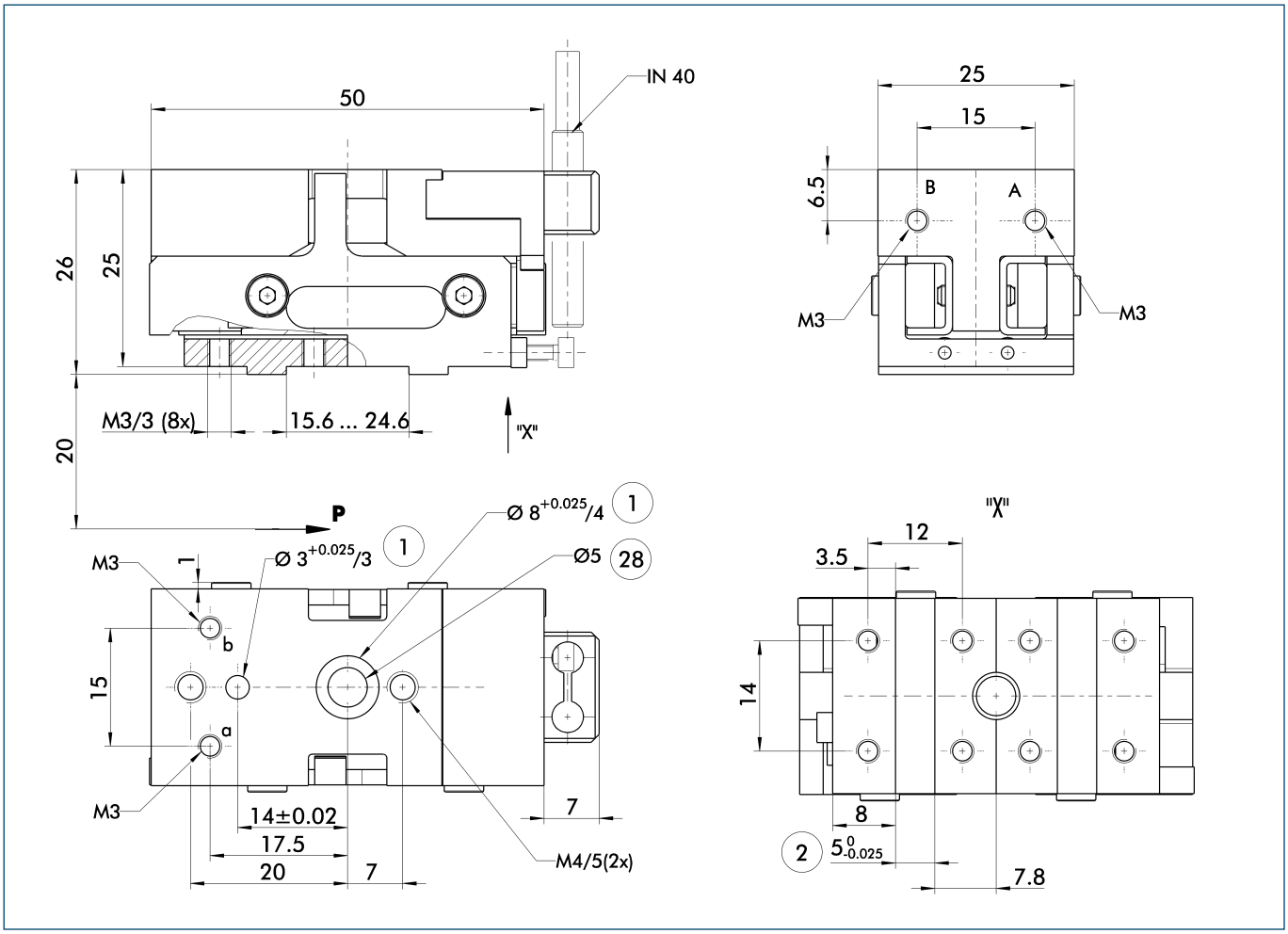


The drawing shows the gripper in the basic version with closed jaws, the dimensions do not include the options described below.

ⓘ The SDV-P pressure maintenance valve can be used as a gripping force maintenance device (see "Accessories" catalog section).

A, a Main/direct connection, gripper opening
B, b Main/direct connection, gripper closing
① Gripper connection
② Finger connection
㉘ Through-bore

## Hose-free direct connection

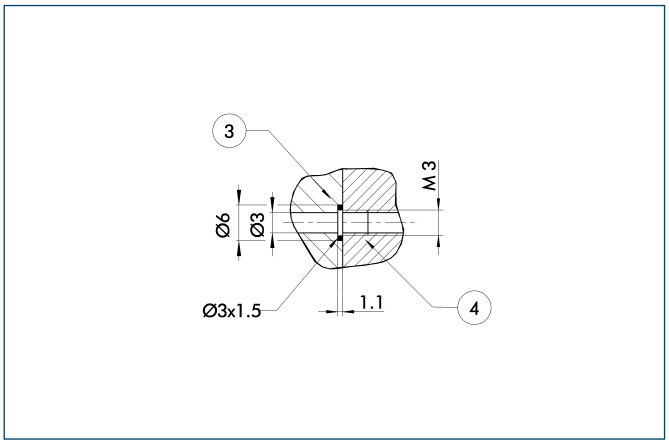


③ Adapter
④ Gripper

The direct connection is used for supplying compressed air without hoses. Instead, the pressure medium is fed through bore-holes in the mounting plate.

## Finger blanks

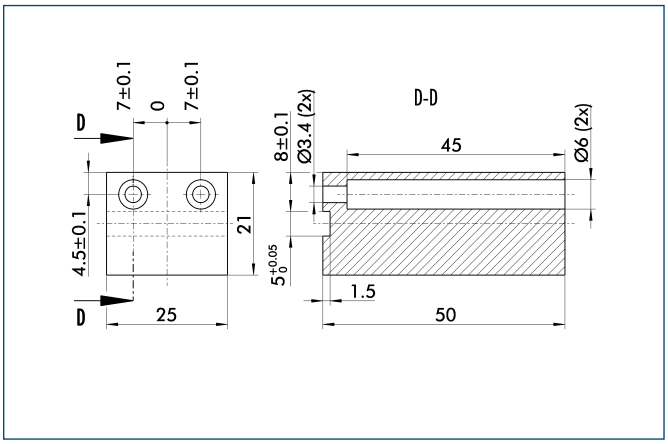


Finger blanks for customized subsequent machining

| Description | ID | Material | Scope of delivery |
|---|---|---|---|
| Finger blanks | | | |
| RB 50 | 0300280 | Aluminum | 2 |

You can find more detailed information and individual parts of the above-mentioned accessories in the "Accessories" catalog section.

## Inductive proximity switches

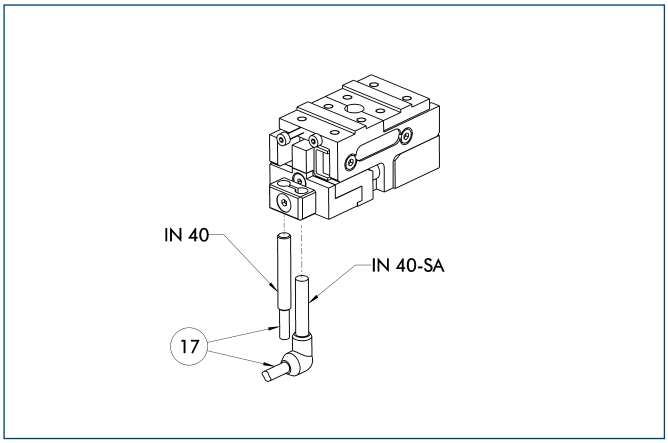


⑰ Cable outlet

End position monitoring for direct mounting

| Description | ID | Recommended product |
|---|---|---|
| Inductive proximity switches | | |
| IN 40-S-M8 | **0301474** | • |
| IN 40-S-M12 | **0301574** | |
| INK 40-S | **0301555** | |
| IN 40-S-M5-PNP | **0301491** | |
| IN 40-S-M5-NPN | **0301492** | |
| Inductive proximity switch with lateral outlet | | |
| IN 40-S-M12-SA | **0301577** | |
| IN 40-S-M8-SA | **0301473** | • |
| INK 40-S-SA | **0301565** | |
| Connection cables | | |
| KA BG05-L 3P-0300 | **0301652** | |
| KA BG08-L 3P-0300-PNP | **0301622** | |
| KA BG08-L 3P-0500-PNP | **0301623** | |
| KA BG12-L 3P-0500-PNP | **30016369** | |
| KA BW05-L 3P-0300 | **0301650** | |
| KA BW08-L 3P-0300-PNP | **0301594** | |
| KA BW08-L 3P-0500-PNP | **0301502** | |
| KA BW12-L 3P-0300-PNP | **0301503** | |
| KA BW12-L 3P-0500-PNP | **0301507** | |
| Cable extensions | | |
| KV BG12-SG12 3P-0030-PNP | **0301999** | |
| KV BG12-SG12 3P-0060-PNP | **0301998** | |
| KV BW08-SG08 3P-0030-PNP | **0301495** | |
| KV BW08-SG08 3P-0100-PNP | **0301496** | |
| KV BW08-SG08 3P-0200-PNP | **0301497** | |
| KV BW12-SG12 3P-0030-PNP | **0301595** | |
| KV BW12-SG12 3P-0100-PNP | **0301596** | |
| KV BW12-SG12 3P-0200-PNP | **0301597** | |

ⓘ Two sensors (closer/NO) are required for each gripper, plus extension cables as an option.

ⓘ Please note the minimum permitted bending radii for the sensor cables, which are generally 35 mm.

You can find more detailed information and individual parts of the above-mentioned accessories in the “Accessories” catalog section.

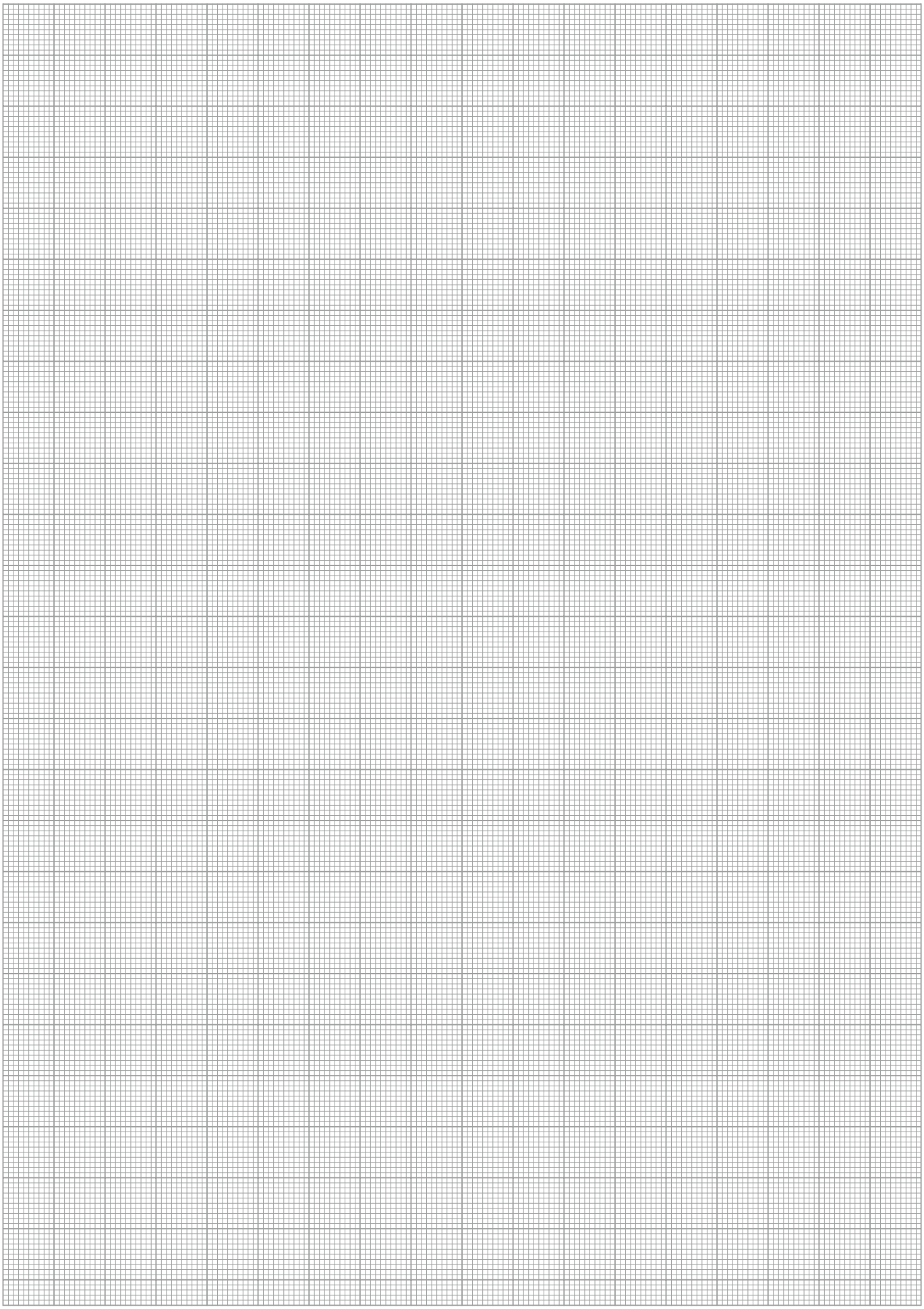

# KGG



**Sizes**
60 ... 280

**Weight**
0.09 kg ... 4.2 kg

**Gripping force**
45 N ... 540 N

**Stroke per finger**
10 mm ... 60 mm

**Workpiece weight**
0.23 kg ... 2.7 kg

## Application example

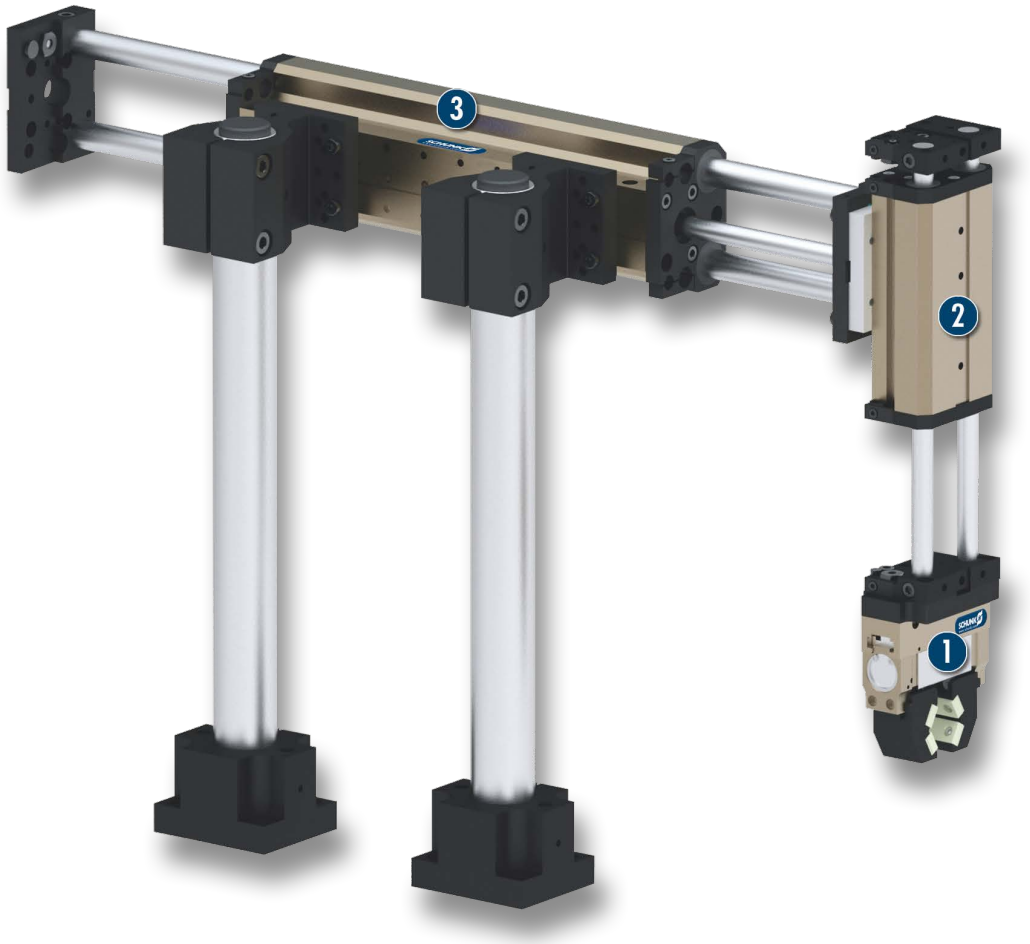


Ejection unit for small components, which require an especially long gripper stroke due to their great variation in size

1. KGG 2-Finger Parallel Gripper with workpiece-specific fingers
2. FST-S Mini-slide for horizontal movement
3. FST-S Mini-slide for vertical movement

## Gripper for small components

narrow 2-finger parallel gripper with long stroke

## Field of application

for universal use in clean environments with light to medium workpiece weights and a large stroke range

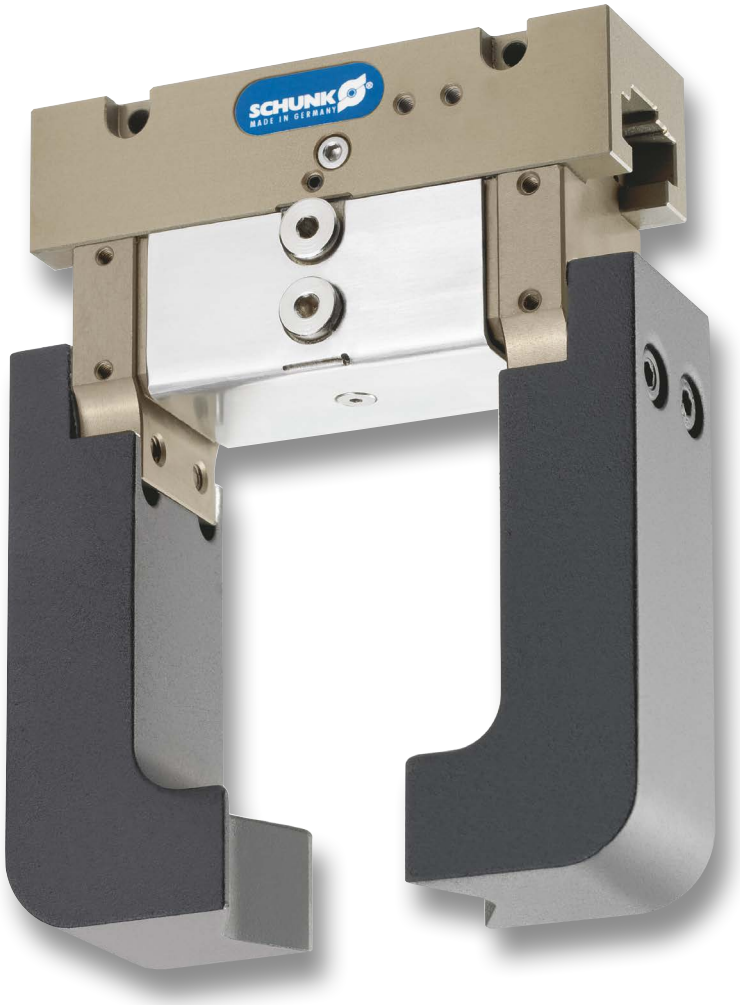


## Your advantages and benefits

**Robust T-slot guidance**
for high maximum moments

**Pneumatic 2-piston drive design**
for direct power transmission and high efficiency

**Rack and pinion principle**
for centric clamping

**Mounting from two sides in three screw directions possible**
for universal and flexible gripper assembly

**Air supply via hose-free direct connection or screw connections**
for the flexible supply of compressed air in all automation systems

## General note to the series

**Principle of function**
Directly driven base jaws, synchronized by rack and pinion

**Housing material**
Aluminum alloy, hard-anodized

**Base jaw material**
Aluminum alloy, hard-anodized

**Actuation**
pneumatic, with filtered compressed air (10 microns): dry, lubricated or non-lubricated
Pressure medium: Required quality class of compressed air according to DIN ISO 8573-1: 6 4 4

**Warranty**
24 months (details, general terms and conditions and operation manuals can be downloaded under www.schunk.com)

**Scope of delivery**
Brackets for proximity switches, centering sleeves, O-rings for direct connection, assembly and operating manual with manufacturer's declaration

**Gripping force maintenance device**
possible with SDV-P pressure maintenance valve

## Sectional diagram

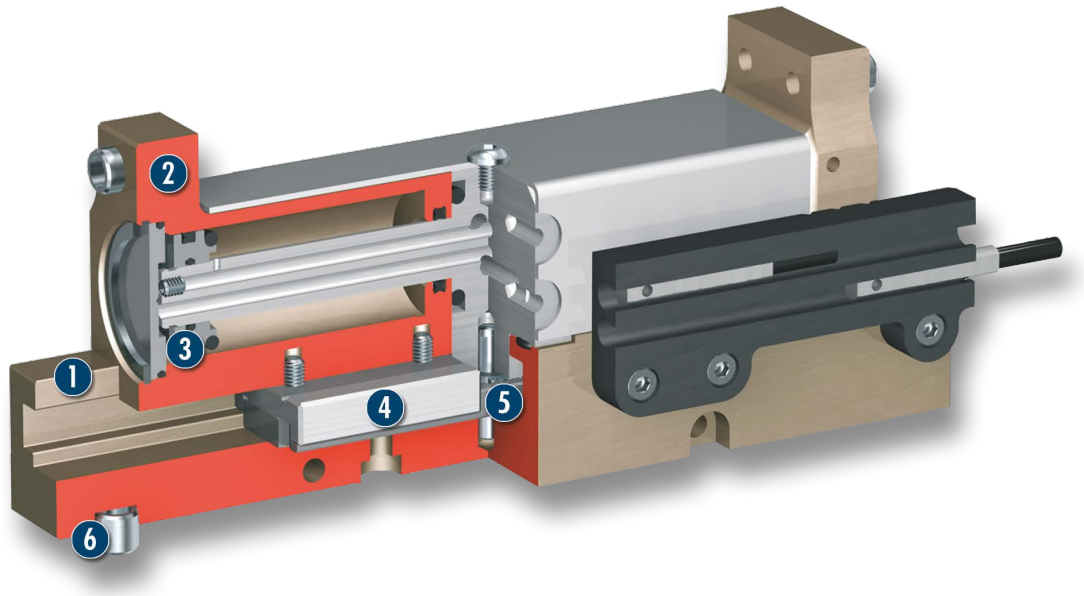


1 **Housing**
weight-optimized through application of hard-anodized, high-strength aluminum alloy

2 **Base jaw**
for the connection of workpiece-specific gripper fingers

3 **Drive**
pneumatic 2-piston system

4 **Guidance**
high maximum moments due to the robust T-slot guidance

5 **Kinematics**
pinion and rack principle for centric clamping, even at large strokes

6 **Centering and mounting possibilities**
for assembly of the gripper to a base area and at the long side

## Functional description

The aligned base jaws are actuated with compressed air directly by the fixed piston, which opens and closes them.
The base jaws are synchronized by the internal rack and pinion arrangement.

## Options and special information

Please note that the mass moment of inertia of the gripper fingers must be kept to a minimum in the case of long-stroke grippers.

## Accessories

Accessories from SCHUNK – the suitable supplement for maximum functionality, reliability and performance of all automation modules.

### Centering sleeves



### Fittings



### Inductive proximity switches



### Magnetic Switches



### Carbide clamping inserts



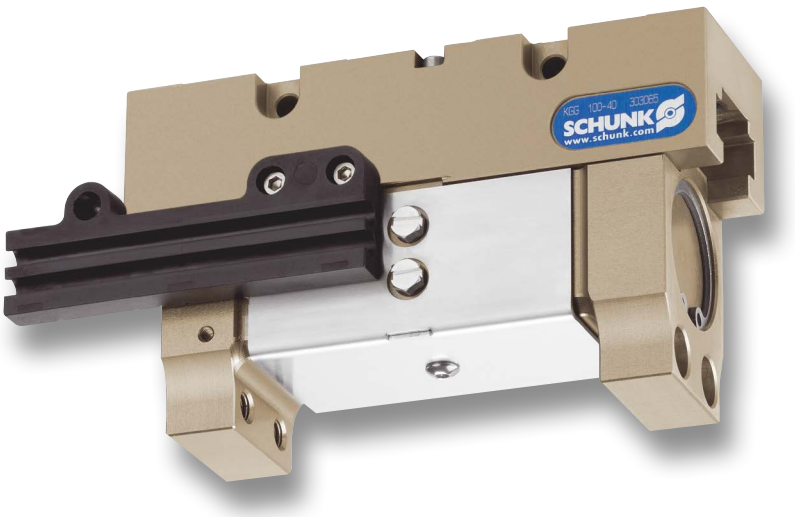


### Sensor cables



### Plastic inserts



### Sensor Distributor

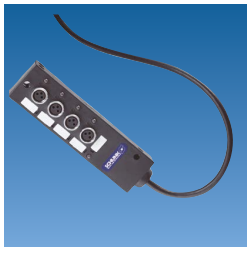

### Gripper pads

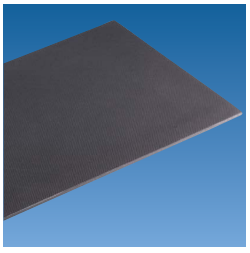

### Pressure maintenance valve



### Finger blanks



### Flexible Position Sensor

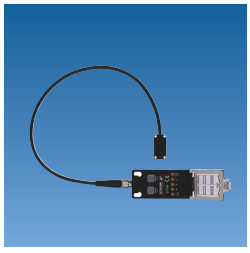

ⓘ For the exact size of the required accessories, availability of this size and the designation and ID, please refer to the additional views at the end of the size in question. You will find more detailed information on our accessory range in the “Accessories” catalog section.

## General note to the series

**Gripping force**
is the arithmetic total of the gripping force applied to each finger at distance P (see illustration) measured from the upper edge of the gripper.

**Finger length**
The finger length is measured from the upper edge of the gripper housing in the direction of the main axis.

**Repeat accuracy**
is defined as the spread of the limit position after 100 consecutive strokes.

**Workpiece weight**
The recommended workpiece weight is calculated for a force-type connection with a coefficient of friction of 0.1 and a safety factor of 2 against slippage of the workpiece on acceleration due to gravity g. Considerably heavier workpiece weights are permitted with form-fit gripping.

**Closing and opening times**
Closing and opening times are purely the times that the base jaws or fingers are in motion. Valve switching times, hose filling times or PLC reaction times are not included in the above times and must be taken into consideration when determining cycle times.

# KGG 60

**Pneumatic • 2-Finger Parallel Gripper • Gripper for small components**



## Gripping force, I.D. gripping

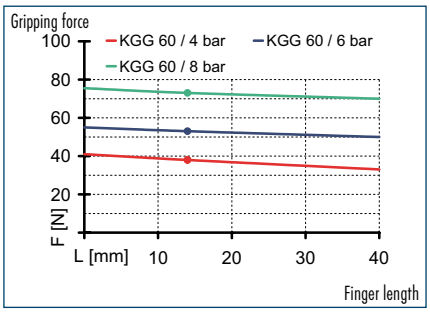


## Gripping force, O.D. gripping

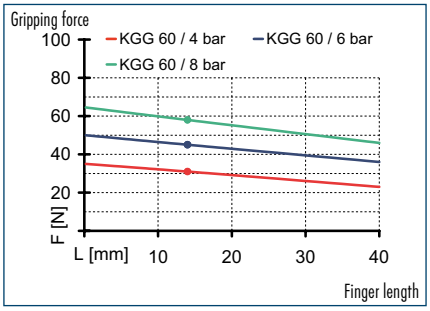


## Finger load

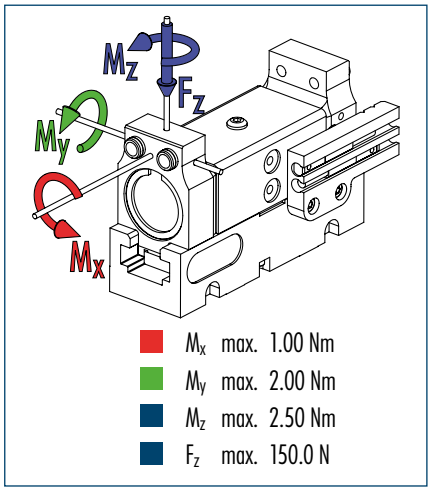


ⓘ The indicated moments and forces are static values, apply per base jaw and may occur simultaneously. $M_y$ may arise in addition to the moment generated by the gripping force itself. If the max. permitted finger weight is exceeded, it is imperative to throttle the air pressure so that the jaw movement occurs without any hitting or bouncing. Service life may be reduced.

## Technical data

| Description | | KGG 60-20 | KGG 60-40 |
|---|---|---|---|
| **ID** | | **0303050** | **0303051** |
| Stroke per finger | [mm] | 10 | 20 |
| Closing force | [N] | 45 | 45 |
| Opening force | [N] | 53 | 53 |
| Weight | [kg] | 0.09 | 0.11 |
| Recommended workpiece weight | [kg] | 0.23 | 0.23 |
| Air consumption per double stroke | [cm³] | 3 | 6 |
| Min./max. operating pressure | [bar] | 2/8 | 2/8 |
| Nominal operating pressure | [bar] | 6 | 6 |
| Closing/opening time | [s] | 0.03/0.03 | 0.04/0.04 |
| Max. permitted finger length | [mm] | 42 | 42 |
| Max. permitted weight per finger | [kg] | 0.04 | 0.04 |
| IP class | | 40 | 40 |
| Min./max. ambient temperature | [°C] | -10/90 | -10/90 |
| Repeat accuracy | [mm] | 0.02 | 0.02 |

ⓘ Requirements to the evenness of the mounting face (relating to the total gripper connection surface) less than 0.02 mm at an edge length of up to 100 mm / more than 0.05 mm at an edge length of more than 100 mm.

## Main view

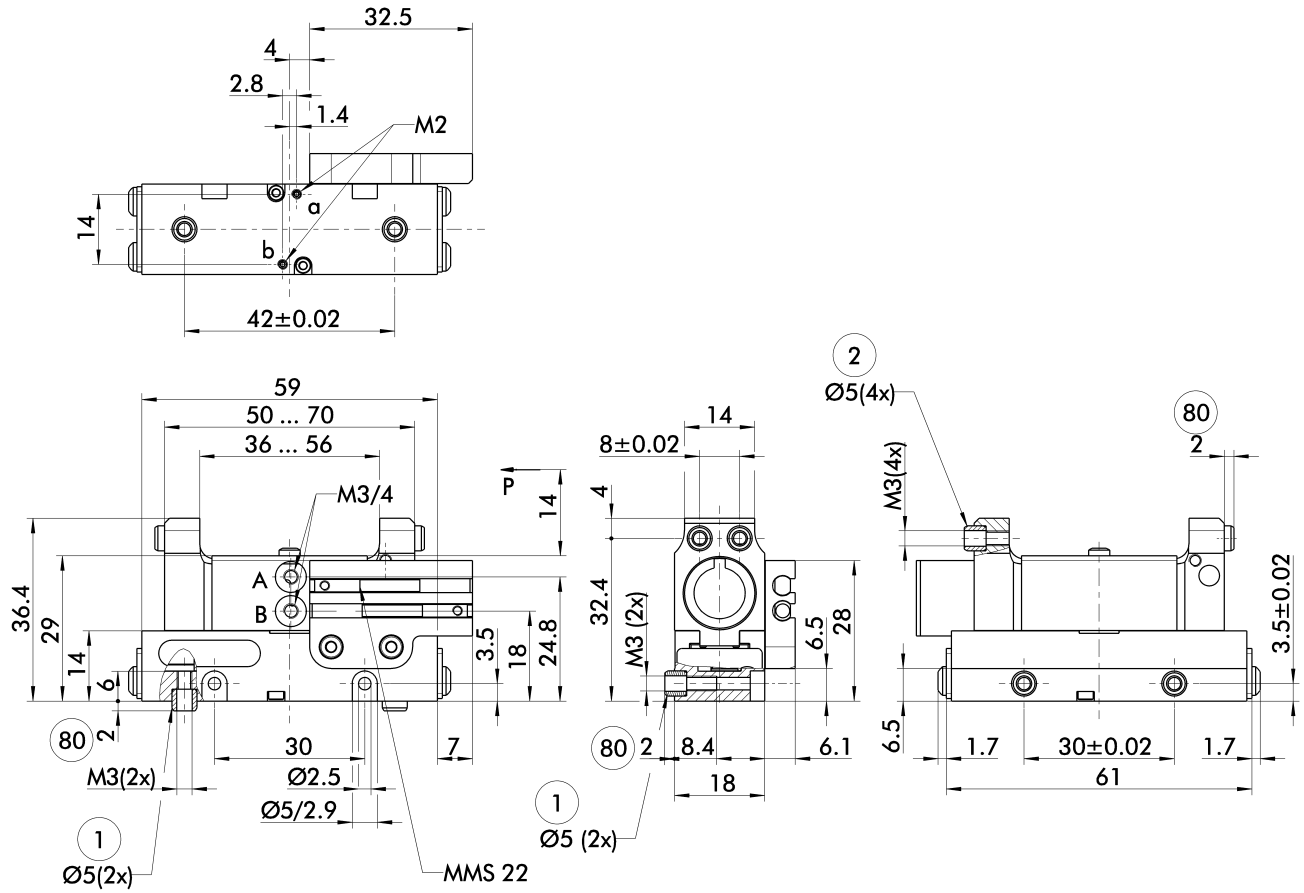


The drawing shows the gripper in the basic version with closed jaws, the dimensions do not include the options described below.

ⓘ The SDV-P pressure maintenance valve can be used as a gripping force maintenance device (see "Accessories" catalog section).

A, a Main/direct connection, gripper opening
B, b Main/direct connection, gripper closing
① Gripper connection
② Finger connection
(80) Depth of the centering sleeve hole in the matching part

## Stroke versions

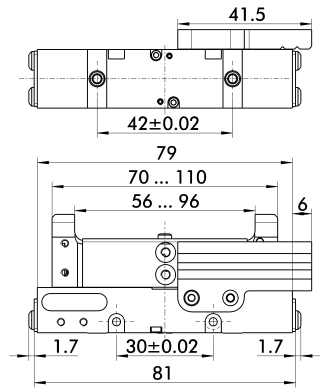


The drawing shows changes in dimensions of the versions with a differing stroke compared to the main view of the shown version.

## Hose-free direct connection

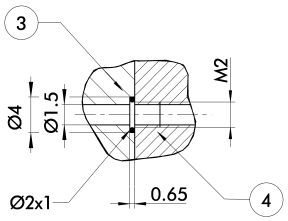


③ Adapter
④ Gripper

The direct connection is used for supplying compressed air without hoses. Instead, the pressure medium is fed through bore-holes in the mounting plate.

## Jaw design O.D. gripping

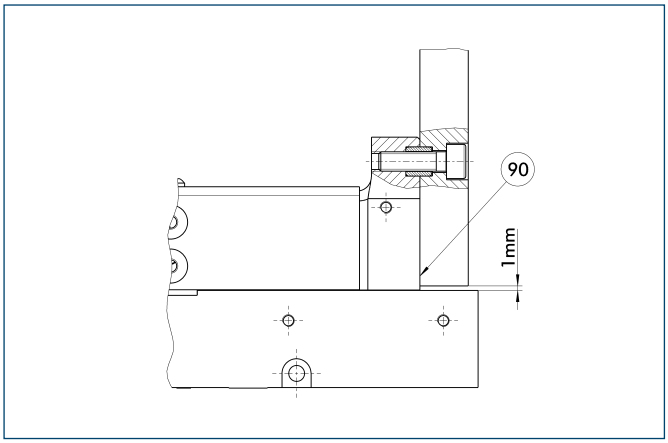


(90) Support top jaws at the base jaw

## Jaw design I.D. gripping

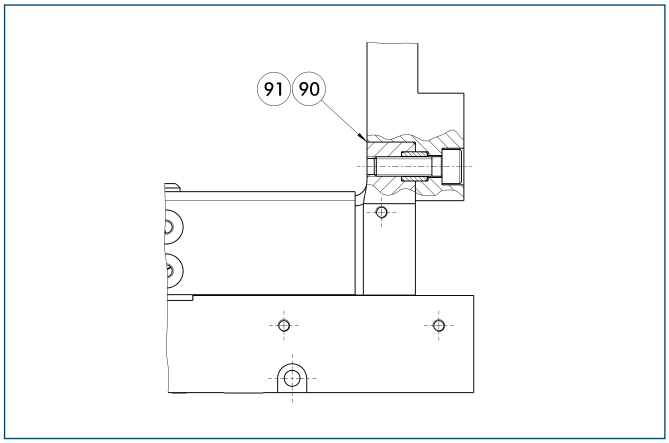


(90) Support top jaws at the base jaw
(91) For dimensions of steps at the top jaw see drawings of finger blanks

## Modular Assembly Automation

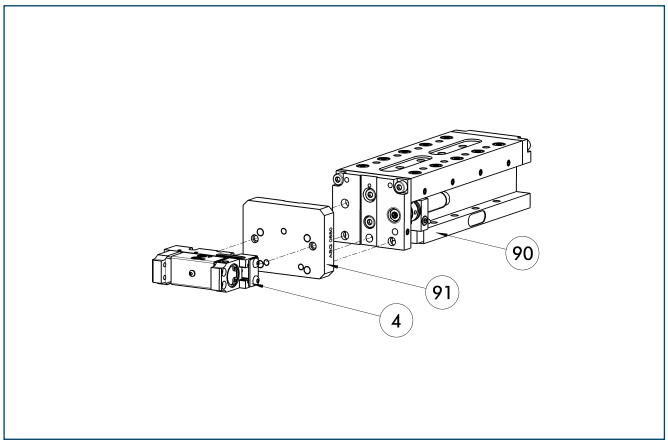


(4) Gripper
(90) CLM
(91) ASG

This gripper can be combined with the standard linear modules LM, KLM, CLM and ELM of the GEMOTEC modular system. For more information see our main catalog “Modular Assembly Automation”.

## Finger blanks

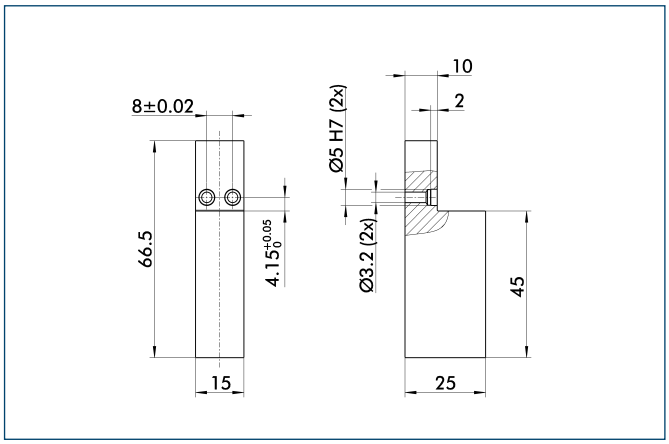


| Description | ID | Material | Scope of delivery |
|---|---|---|---|
| Finger blanks | | | |
| RB 60 | **0303087** | Aluminum | 2 |

You can find more detailed information and individual parts of the above-mentioned accessories in the “Accessories” catalog section.

## Programmable magnetic switch

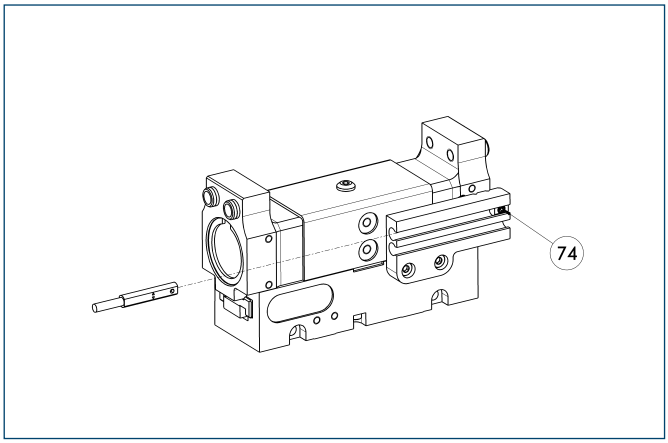


(74) Stop for MMS-P

Position monitoring with two programmable positions per sensor. The end position monitoring is mounted in the C-slot.

| Description | ID | Recommended product |
|---|---|---|
| Programmable magnetic switch | | |
| MMS-P 22-S-M8-PNP | **0301370** | • |
| MMSK-P 22-S-PNP | **0301371** | |
| Connection cables | | |
| KA BG08-L 4P-0500 | **0307767** | |
| KA BG08-L 4P-1000 | **0307768** | |
| KA BW08-L 4P-0500 | **0307765** | |
| KA BW08-L 4P-1000 | **0307766** | |

ⓘ Please note the minimum permitted bending radii for the sensor cables, which are generally 35 mm.

ⓘ Per gripper one sensor (closer/NO) is required, optionally a cable extension.

ⓘ Within the KGG series, the MMS-P could just cover the whole piston area of KGG 60-20/70-24/80-30

## Electronic magnetic switches

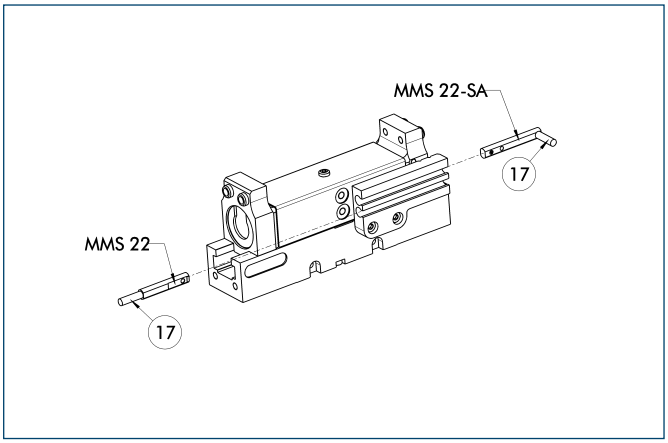


(17) Cable outlet

End position monitoring for mounting in the C-slot

| Description | ID | Recommended product |
|---|---|---|
| Electronic magnetic switches | | |
| MMS 22-S-M5-PNP | **0301438** | |
| MMS 22-S-M5-NPN | **0301439** | |
| MMS 22-S-M8-PNP | **0301432** | • |
| MMS 22-S-M8-NPN | **0301433** | |
| MMSK 22-S-PNP | **0301434** | |
| MMSK 22-S-NPN | **0301435** | |
| Electronic magnetic switches with lateral cable outlet | | |
| MMS 22-S-M5-PNP-SA | **0301448** | |
| MMS 22-S-M5-NPN-SA | **0301449** | |
| MMS 22-S-M8-PNP-SA | **0301442** | • |
| MMS 22-S-M8-NPN-SA | **0301443** | |
| MMSK 22-S-PNP-SA | **0301444** | |
| MMSK 22-S-NPN-SA | **0301445** | |
| Reed Switches | | |
| RMS 22-S-M8 | **0377720** | • |
| Connection cables | | |
| KA BG05-L 3P-0300 | **0301652** | |
| KA BG08-L 3P-0300-PNP | **0301622** | |
| KA BG08-L 3P-0500-PNP | **0301623** | |
| KA BW05-L 3P-0300 | **0301650** | |
| KA BW08-L 3P-0300-NPN | **0301602** | |
| KA BW08-L 3P-0300-PNP | **0301594** | |
| KA BW08-L 3P-0500-NPN | **9641116** | |
| KA BW08-L 3P-0500-PNP | **0301502** | |
| Cable extensions | | |
| KV BW08-SG08 3P-0030-PNP | **0301495** | |
| KV BW08-SG08 3P-0100-PNP | **0301496** | |
| KV BW08-SG08 3P-0200-PNP | **0301497** | |

ⓘ Two sensors (closer/NO) are required for each gripper, plus extension cables as an option.

ⓘ Please note the minimum permitted bending radii for the sensor cables, which are generally 35 mm.

You can find more detailed information and individual parts of the above-mentioned accessories in the “Accessories” catalog section.

## Mounting kit for proximity switch

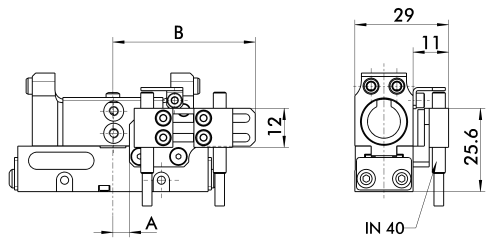


| Typ | A | B |
|---|---|---|
| KGG 60-20 | 5 | 44 |
| KGG 60-40 | 5 | 59 |

The mounting kit includes a bracket, switch cams and mounting screws. Proximity switches must be ordered separately.

| Description | ID |
|---|---|
| Mounting kit for proximity switch | |
| AS-KGG 60-40 / 70-48 | **0303080** |
| AS-KGG 60-20 / 70-24 | **0303081** |

ⓘ This mounting kit needs to be ordered optionally as an accessory.

## Inductive proximity switches

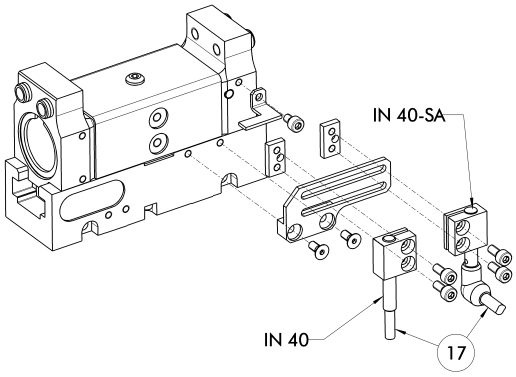


⑰ Cable outlet

End position monitoring mounted with mounting kit

| Description | ID | Recommended product |
|---|---|---|
| Mounting kit for proximity switch | | |
| AS-KGG 60-40 / 70-48 | **0303080** | |
| AS-KGG 60-20 / 70-24 | **0303081** | |
| Inductive proximity switches | | |
| IN 40-S-M8 | **0301474** | • |
| IN 40-S-M12 | **0301574** | |
| INK 40-S | **0301555** | |
| Inductive proximity switch with lateral outlet | | |
| IN 40-S-M12-SA | **0301577** | |
| IN 40-S-M8-SA | **0301473** | • |
| INK 40-S-SA | **0301565** | |

ⓘ Two sensors (closer/NO) are required for each gripper, plus extension cables as an option.
ⓘ This mounting kit needs to be ordered optionally as an accessory.
ⓘ Please note the minimum permitted bending radii for the sensor cables, which are generally 35 mm.

You can find more detailed information and individual parts of the above-mentioned accessories in the “Accessories” catalog section.

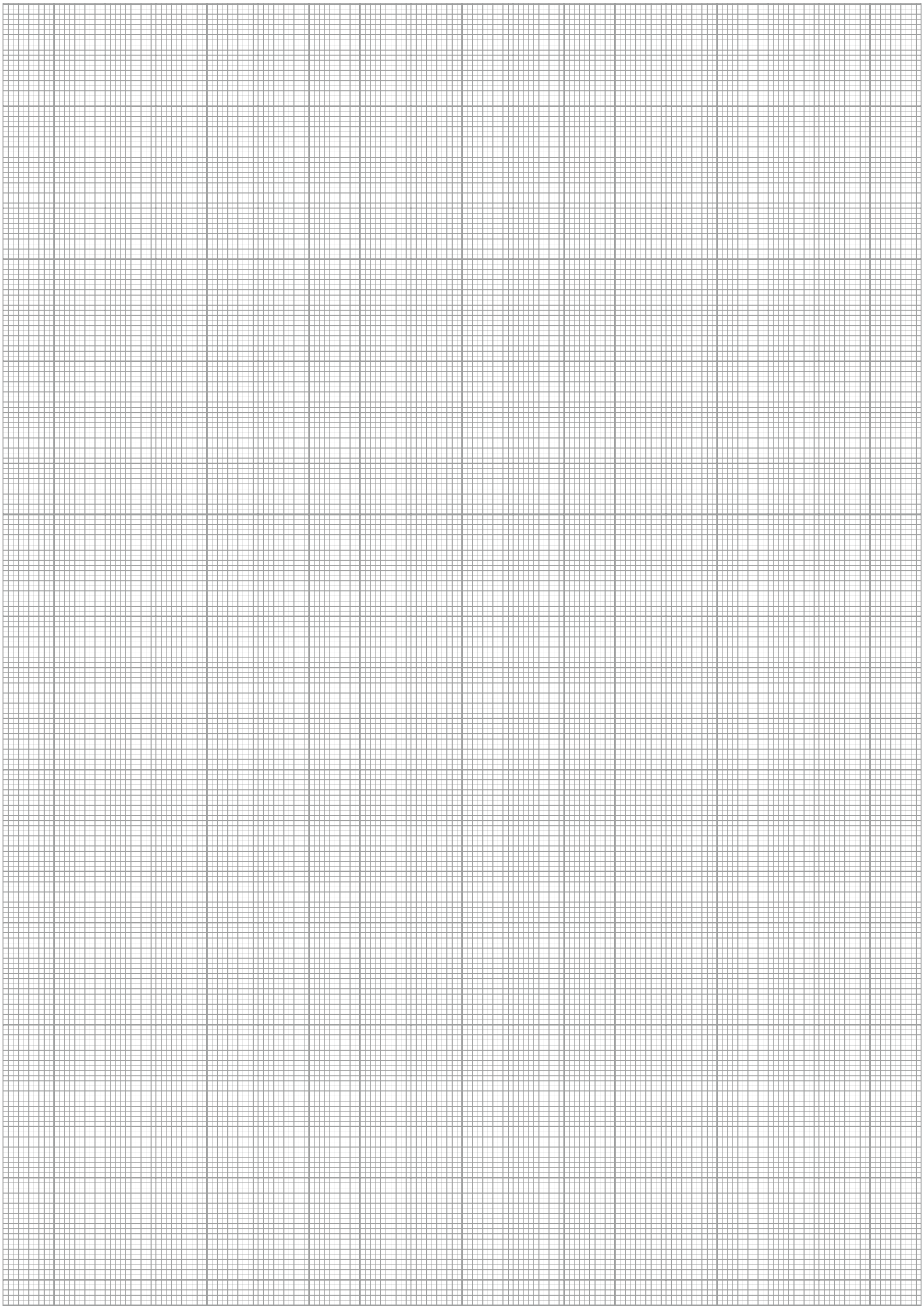

# KGG 70

**Pneumatic • 2-Finger Parallel Gripper • Gripper for small components**



## Gripping force, I.D. gripping

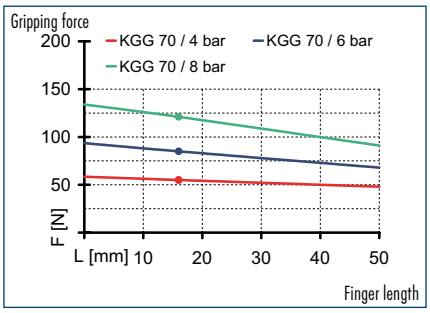


## Gripping force, O.D. gripping

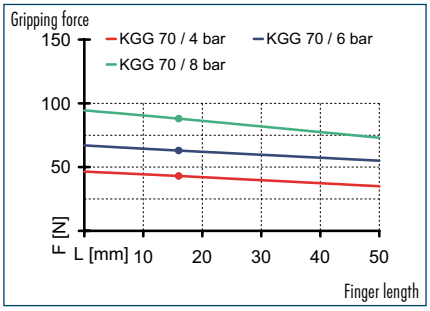


## Finger load

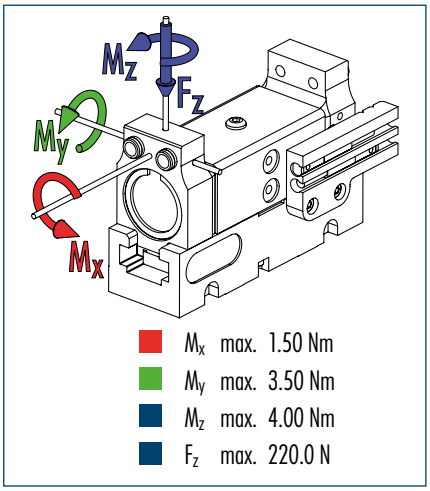


ⓘ The indicated moments and forces are static values, apply per base jaw and may occur simultaneously. $M_y$ may arise in addition to the moment generated by the gripping force itself. If the max. permitted finger weight is exceeded, it is imperative to throttle the air pressure so that the jaw movement occurs without any hitting or bouncing. Service life may be reduced.

## Technical data

| Description | | KGG 70-24 | KGG 70-48 |
|---|---|---|---|
| **ID** | | **0303055** | **0303056** |
| Stroke per finger | [mm] | 12 | 24 |
| Closing force | [N] | 62 | 62 |
| Opening force | [N] | 85 | 85 |
| Weight | [kg] | 0.15 | 0.19 |
| Recommended workpiece weight | [kg] | 0.32 | 0.32 |
| Air consumption per double stroke | [cm³] | 5 | 10 |
| Min./max. operating pressure | [bar] | 2/8 | 2/8 |
| Nominal operating pressure | [bar] | 6 | 6 |
| Closing/opening time | [s] | 0.04/0.04 | 0.05/0.05 |
| Max. permitted finger length | [mm] | 50 | 50 |
| Max. permitted weight per finger | [kg] | 0.06 | 0.06 |
| IP class | | 40 | 40 |
| Min./max. ambient temperature | [°C] | -10/90 | -10/90 |
| Repeat accuracy | [mm] | 0.02 | 0.02 |

ⓘ Requirements to the evenness of the mounting face (relating to the total gripper connection surface) less than 0.02 mm at an edge length of up to 100 mm / more than 0.05 mm at an edge length of more than 100 mm.

## Main view

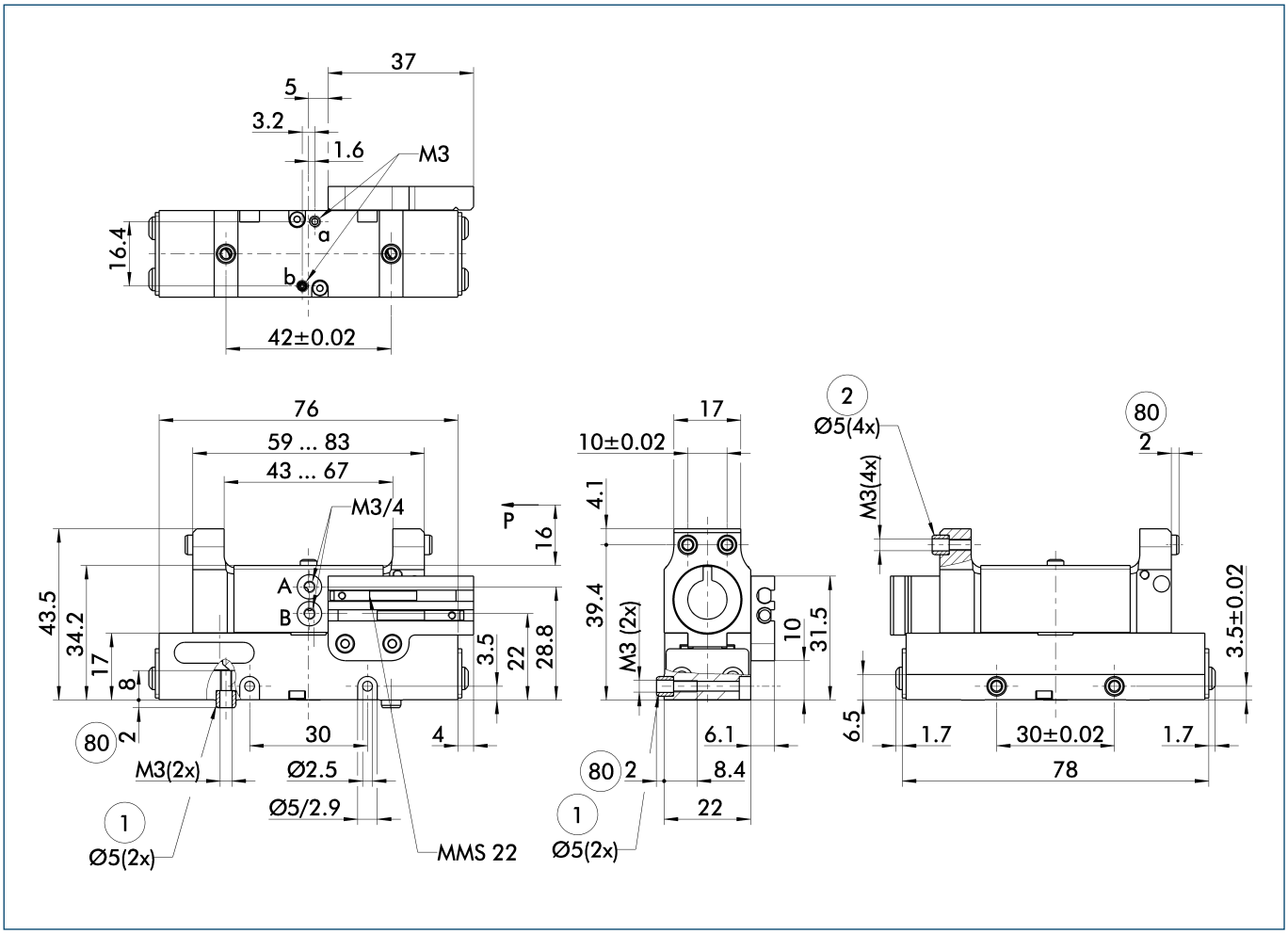


The drawing shows the gripper in the basic version with closed jaws, the dimensions do not include the options described below.

ⓘ The SDV-P pressure maintenance valve can be used as a gripping force maintenance device (see "Accessories" catalog section).

A, a Main/direct connection, gripper opening
B, b Main/direct connection, gripper closing
① Gripper connection
② Finger connection
(80) Depth of the centering sleeve hole in the matching part

## Stroke versions

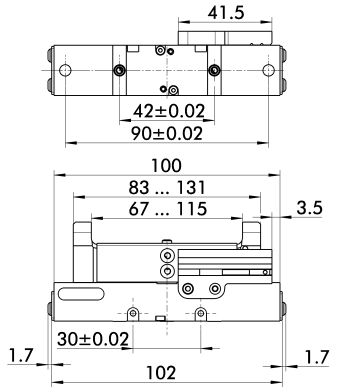


The drawing shows changes in dimensions of the versions with a differing stroke compared to the main view of the shown version.

## Hose-free direct connection

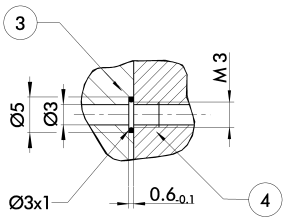


③ Adapter
④ Gripper

The direct connection is used for supplying compressed air without hoses. Instead, the pressure medium is fed through bore-holes in the mounting plate.

## Jaw design O.D. gripping

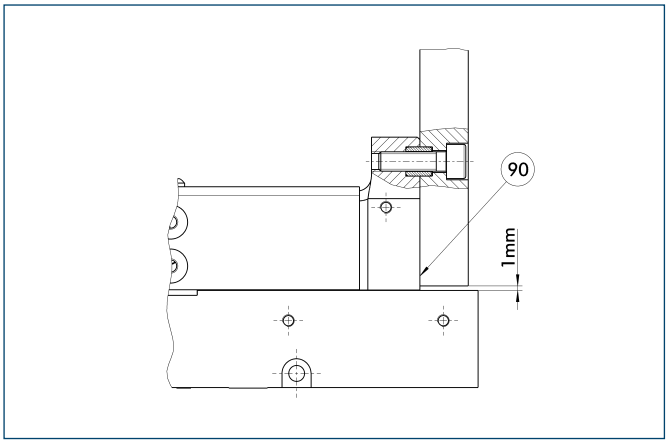


(90) Support top jaws at the base jaw

## Jaw design I.D. gripping

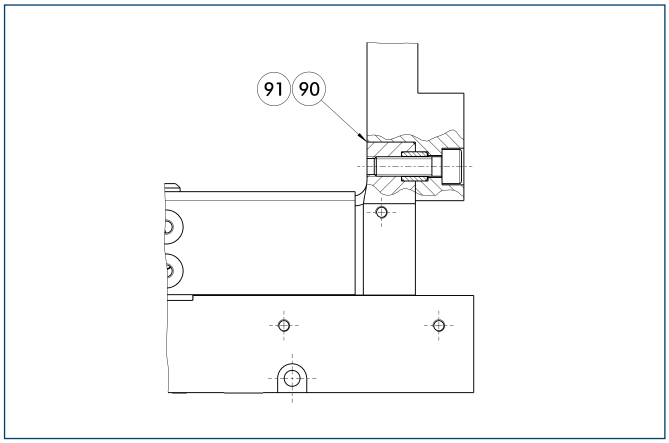


(90) Support top jaws at the base jaw
(91) For dimensions of steps at the top jaw see drawings of finger blanks

## Modular Assembly Automation

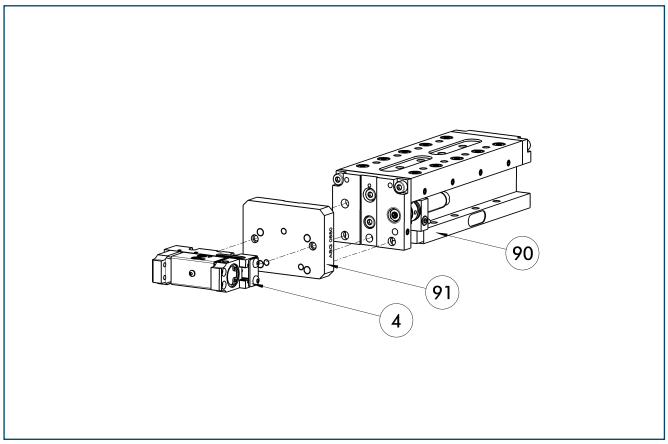


(4) Gripper
(90) CLM
(91) ASG

This gripper can be combined with the standard linear modules LM, KLM, CLM and ELM of the GEMOTEC modular system. For more information see our main catalog “Modular Assembly Automation”.

## Finger blanks

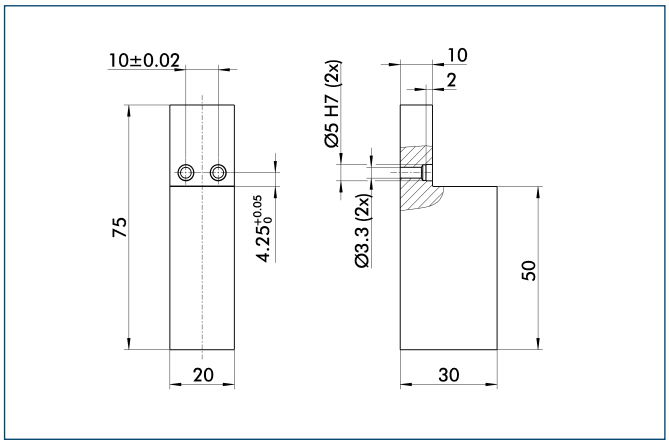


| Description | ID | Material | Scope of delivery |
|---|---|---|---|
| Finger blanks | | | |
| RB 70 | **0303088** | Aluminum | 2 |

You can find more detailed information and individual parts of the above-mentioned accessories in the “Accessories” catalog section.

## Programmable magnetic switch

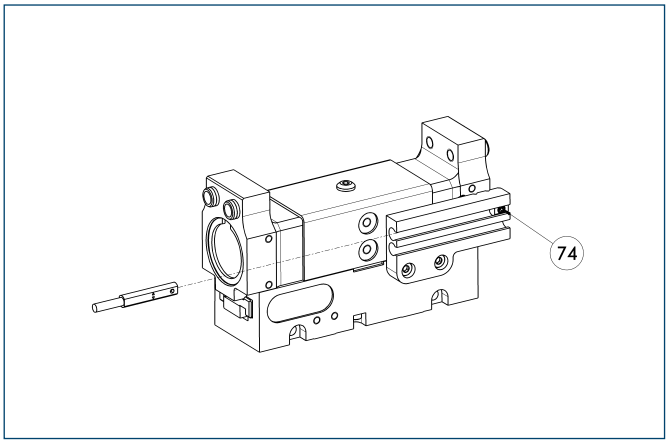


(74) Stop for MMS-P

Position monitoring with two programmable positions per sensor. The end position monitoring is mounted in the C-slot.

| Description | ID | Recommended product |
|---|---|---|
| Programmable magnetic switch | | |
| MMS-P 22-S-M8-PNP | **0301370** | • |
| MMSK-P 22-S-PNP | **0301371** | |
| Connection cables | | |
| KA BG08-L 4P-0500 | **0307767** | |
| KA BG08-L 4P-1000 | **0307768** | |
| KA BW08-L 4P-0500 | **0307765** | |
| KA BW08-L 4P-1000 | **0307766** | |

ⓘ Please note the minimum permitted bending radii for the sensor cables, which are generally 35 mm.

ⓘ Per gripper one sensor (closer/NO) is required, optionally a cable extension.

ⓘ Within the KGG series, the MMS-P could just cover the whole piston area of KGG 60-20/70-24/80-30

## Electronic magnetic switches

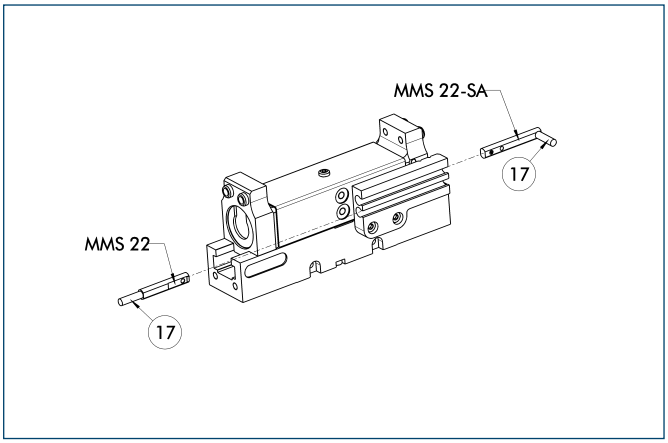


(17) Cable outlet

End position monitoring for mounting in the C-slot

| Description | ID | Recommended product |
|---|---|---|
| Electronic magnetic switches | | |
| MMS 22-S-M5-PNP | **0301438** | |
| MMS 22-S-M5-NPN | **0301439** | |
| MMS 22-S-M8-PNP | **0301432** | • |
| MMS 22-S-M8-NPN | **0301433** | |
| MMSK 22-S-PNP | **0301434** | |
| MMSK 22-S-NPN | **0301435** | |
| Electronic magnetic switches with lateral cable outlet | | |
| MMS 22-S-M5-PNP-SA | **0301448** | |
| MMS 22-S-M5-NPN-SA | **0301449** | |
| MMS 22-S-M8-PNP-SA | **0301442** | • |
| MMS 22-S-M8-NPN-SA | **0301443** | |
| MMSK 22-S-PNP-SA | **0301444** | |
| MMSK 22-S-NPN-SA | **0301445** | |
| Reed Switches | | |
| RMS 22-S-M8 | **0377720** | • |
| Connection cables | | |
| KA BG05-L 3P-0300 | **0301652** | |
| KA BG08-L 3P-0300-PNP | **0301622** | |
| KA BG08-L 3P-0500-PNP | **0301623** | |
| KA BW05-L 3P-0300 | **0301650** | |
| KA BW08-L 3P-0300-NPN | **0301602** | |
| KA BW08-L 3P-0300-PNP | **0301594** | |
| KA BW08-L 3P-0500-NPN | **9641116** | |
| KA BW08-L 3P-0500-PNP | **0301502** | |
| Cable extensions | | |
| KV BW08-SG08 3P-0030-PNP | **0301495** | |
| KV BW08-SG08 3P-0100-PNP | **0301496** | |
| KV BW08-SG08 3P-0200-PNP | **0301497** | |

ⓘ Two sensors (closer/NO) are required for each gripper, plus extension cables as an option.

ⓘ Please note the minimum permitted bending radii for the sensor cables, which are generally 35 mm.

You can find more detailed information and individual parts of the above-mentioned accessories in the “Accessories” catalog section.

## Mounting kit for proximity switch

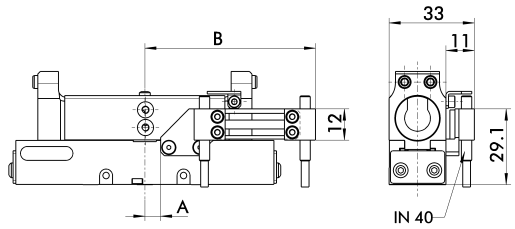


| Typ | A | B |
|---|---|---|
| KGG 70-24 | 6 | 45 |
| KGG 70-48 | 6 | 66 |

| Description | ID |
|---|---|
| Mounting kit for proximity switch | |
| AS-KGG 60-40 / 70-48 | **0303080** |
| AS-KGG 60-20 / 70-24 | **0303081** |

ⓘ This mounting kit needs to be ordered optionally as an accessory.

## Inductive proximity switches

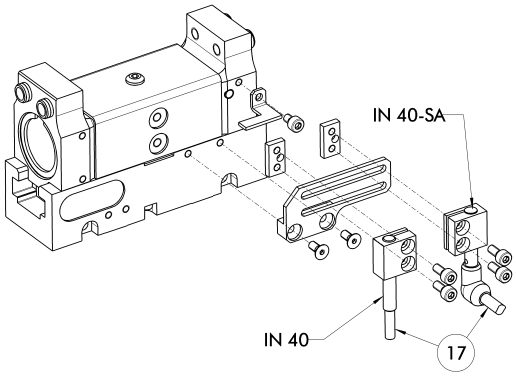


⑰ Cable outlet

End position monitoring mounted with mounting kit

| Description | ID | Recommended product |
|---|---|---|
| Mounting kit for proximity switch | | |
| AS-KGG 60-40 / 70-48 | **0303080** | |
| AS-KGG 60-20 / 70-24 | **0303081** | |
| Inductive proximity switches | | |
| IN 40-S-M8 | **0301474** | • |
| IN 40-S-M12 | **0301574** | |
| INK 40-S | **0301555** | |
| Inductive proximity switch with lateral outlet | | |
| IN 40-S-M12-SA | **0301577** | |
| IN 40-S-M8-SA | **0301473** | • |
| INK 40-S-SA | **0301565** | |

ⓘ Two sensors (closer/NO) are required for each gripper, plus extension cables as an option.

ⓘ This mounting kit needs to be ordered optionally as an accessory.

ⓘ Please note the minimum permitted bending radii for the sensor cables, which are generally 35 mm.

You can find more detailed information and individual parts of the above-mentioned accessories in the “Accessories” catalog section.

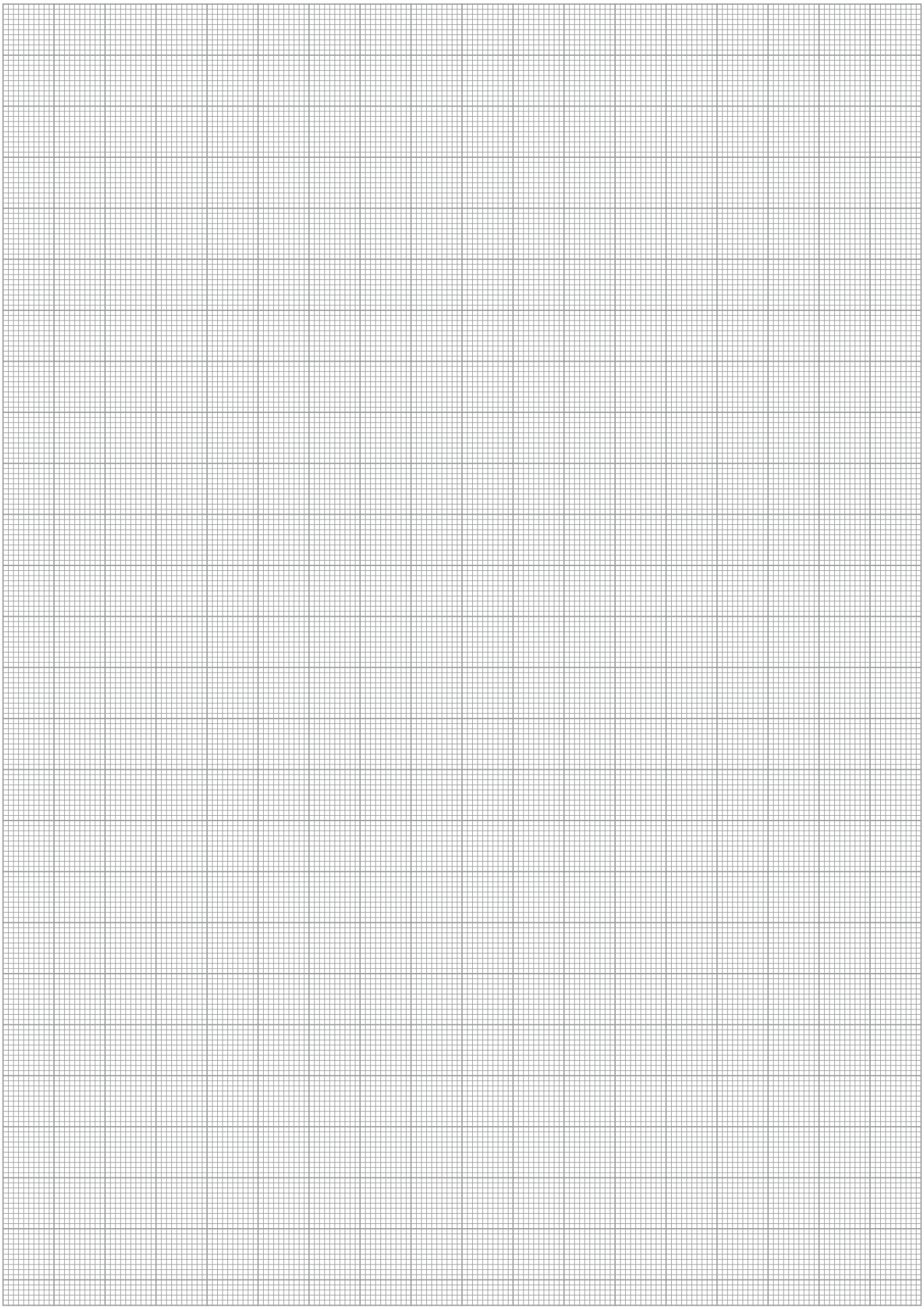

# KGG 80

**Pneumatic • 2-Finger Parallel Gripper • Gripper for small components**



## Gripping force, I.D. gripping

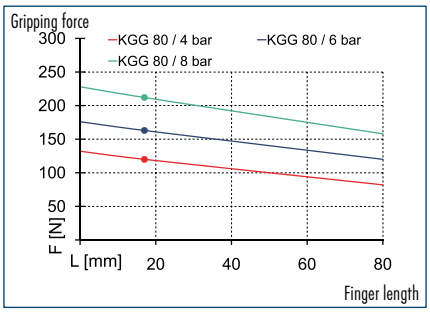


## Gripping force, O.D. gripping

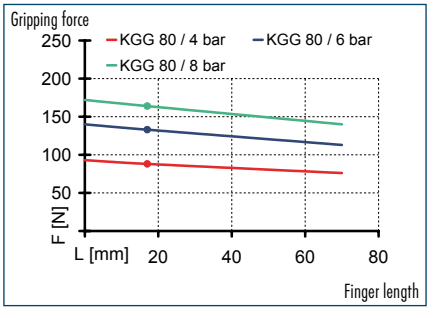


## Finger load

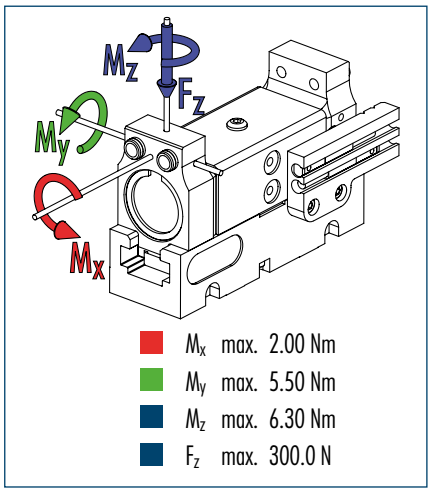


ⓘ The indicated moments and forces are static values, apply per base jaw and may occur simultaneously. $M_y$ may arise in addition to the moment generated by the gripping force itself. If the max. permitted finger weight is exceeded, it is imperative to throttle the air pressure so that the jaw movement occurs without any hitting or bouncing. Service life may be reduced.

## Technical data

| Description | | KGG 80-30 | KGG 80-60 |
|---|---|---|---|
| ID | | 0303060 | 0303061 |
| Stroke per finger | [mm] | 15 | 30 |
| Closing force | [N] | 130 | 130 |
| Opening force | [N] | 165 | 165 |
| Weight | [kg] | 0.25 | 0.33 |
| Recommended workpiece weight | [kg] | 0.66 | 0.66 |
| Air consumption per double stroke | [cm³] | 12 | 24 |
| Min./max. operating pressure | [bar] | 2/8 | 2/8 |
| Nominal operating pressure | [bar] | 6 | 6 |
| Closing/opening time | [s] | 0.05/0.05 | 0.08/0.07 |
| Max. permitted finger length | [mm] | 80 | 80 |
| Max. permitted weight per finger | [kg] | 0.15 | 0.15 |
| IP class | | 40 | 40 |
| Min./max. ambient temperature | [°C] | -10/90 | -10/90 |
| Repeat accuracy | [mm] | 0.02 | 0.02 |

ⓘ Requirements to the evenness of the mounting face (relating to the total gripper connection surface) less than 0.02 mm at an edge length of up to 100 mm / more than 0.05 mm at an edge length of more than 100 mm.

## Main view

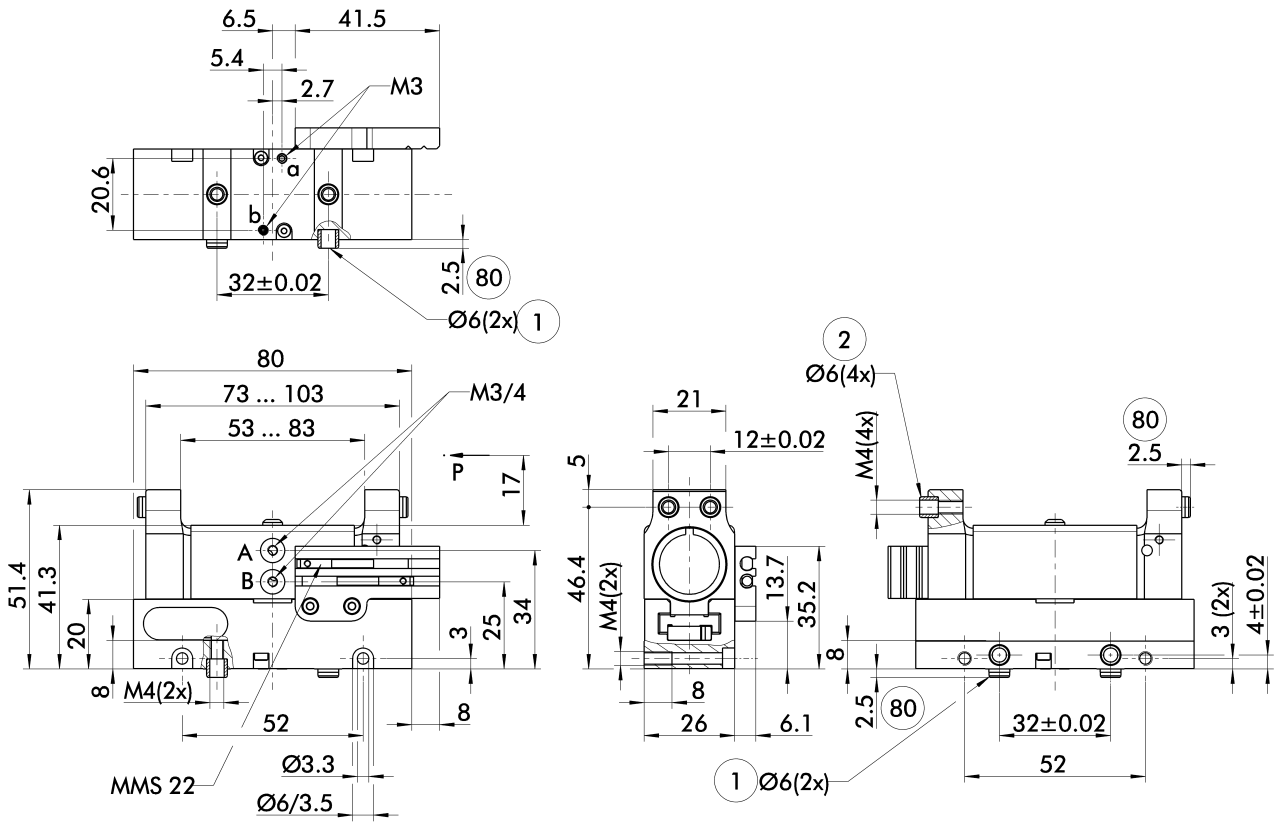


The drawing shows the gripper in the basic version with closed jaws, the dimensions do not include the options described below.

ⓘ The SDV-P pressure maintenance valve can be used as a gripping force maintenance device (see "Accessories" catalog section).

A, a Main/direct connection, gripper opening
B, b Main/direct connection, gripper closing
① Gripper connection
② Finger connection
(80) Depth of the centering sleeve hole in the matching part

## Stroke versions

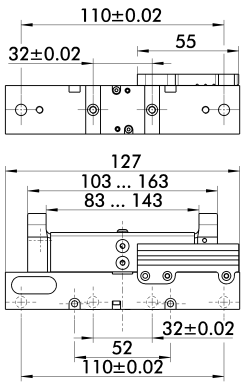


The drawing shows changes in dimensions of the versions with a differing stroke compared to the main view of the shown version.

## Hose-free direct connection

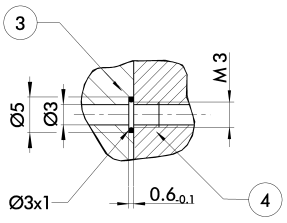


③ Adapter
④ Gripper

The direct connection is used for supplying compressed air without hoses. Instead, the pressure medium is fed through bore-holes in the mounting plate.

## Jaw design O.D. gripping

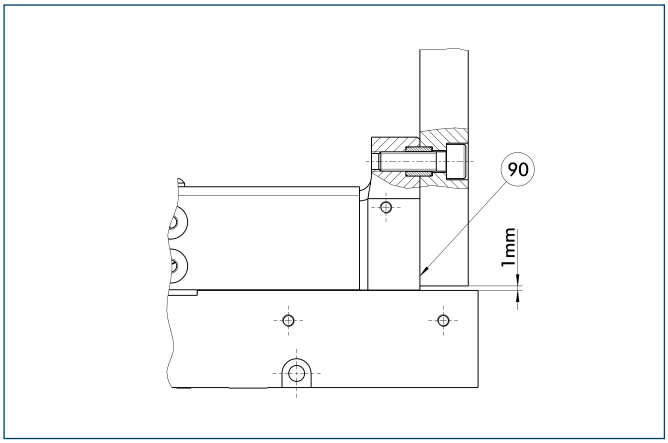


(90) Support top jaws at the base jaw

## Jaw design I.D. gripping

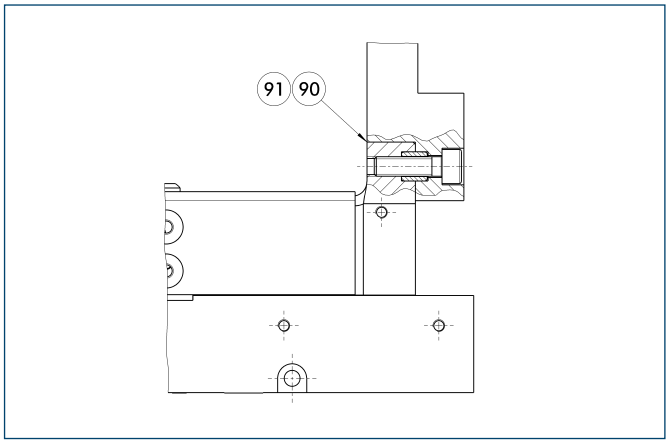


(90) Support top jaws at the base jaw
(91) For dimensions of steps at the top jaw see drawings of finger blanks

## Modular Assembly Automation

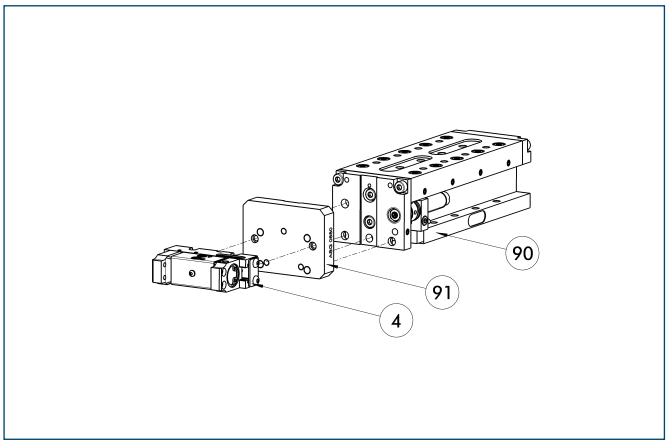


(4) Gripper
(90) CLM
(91) ASG

This gripper can be combined with the standard linear modules LM, KLM, CLM and ELM of the GEMOTEC modular system. For more information see our main catalog “Modular Assembly Automation”.

## Finger blanks

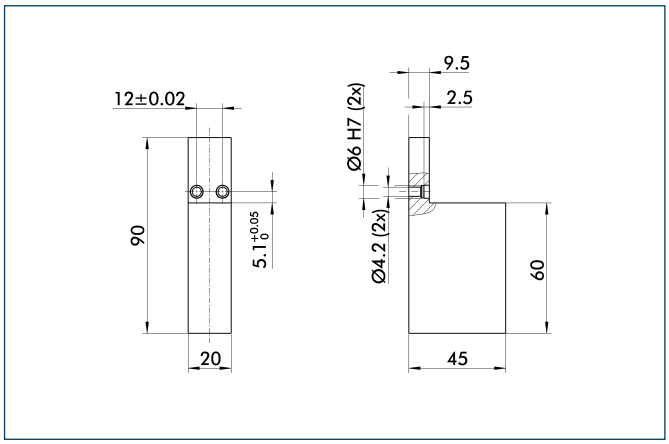


| Description | ID | Material | Scope of delivery |
|---|---|---|---|
| Finger blanks | | | |
| RB 80 | **0303089** | Aluminum | 2 |

You can find more detailed information and individual parts of the above-mentioned accessories in the “Accessories” catalog section.

## Programmable magnetic switch

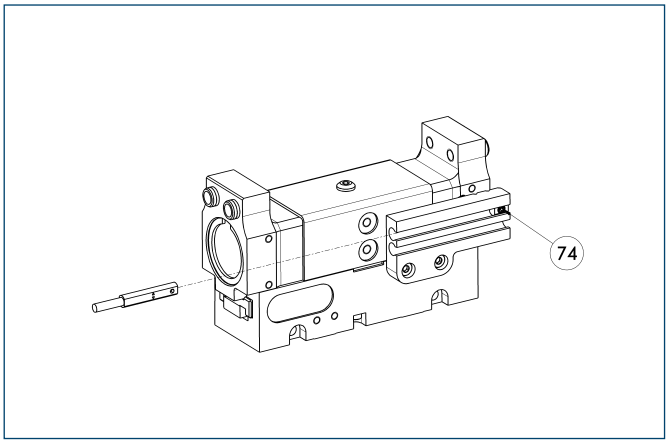


(74) Stop for MMS-P

Position monitoring with two programmable positions per sensor. The end position monitoring is mounted in the C-slot.

| Description | ID | Recommended product |
|---|---|---|
| Programmable magnetic switch | | |
| MMS-P 22-S-M8-PNP | **0301370** | • |
| MMSK-P 22-S-PNP | **0301371** | |
| Connection cables | | |
| KA BG08-L 4P-0500 | **0307767** | |
| KA BG08-L 4P-1000 | **0307768** | |
| KA BW08-L 4P-0500 | **0307765** | |
| KA BW08-L 4P-1000 | **0307766** | |

ⓘ Please note the minimum permitted bending radii for the sensor cables, which are generally 35 mm.

ⓘ Per gripper one sensor (closer/NO) is required, optionally a cable extension.

ⓘ Within the KGG series, the MMS-P could just cover the whole piston area of KGG 60-20/70-24/80-30

## Electronic magnetic switches

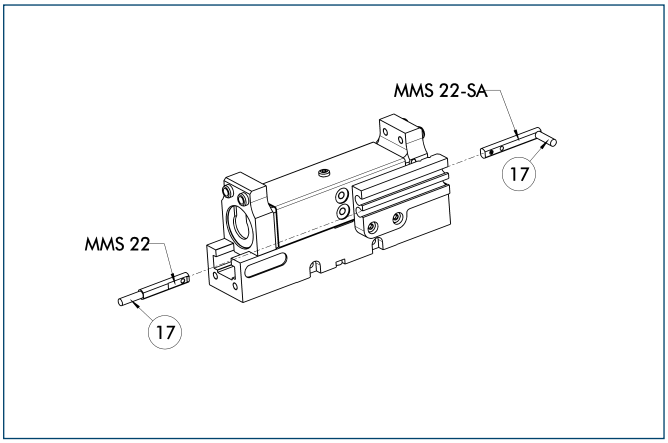


(17) Cable outlet

End position monitoring for mounting in the C-slot

| Description | ID | Recommended product |
|---|---|---|
| Electronic magnetic switches | | |
| MMS 22-S-M5-PNP | **0301438** | |
| MMS 22-S-M5-NPN | **0301439** | |
| MMS 22-S-M8-PNP | **0301432** | • |
| MMS 22-S-M8-NPN | **0301433** | |
| MMSK 22-S-PNP | **0301434** | |
| MMSK 22-S-NPN | **0301435** | |
| Electronic magnetic switches with lateral cable outlet | | |
| MMS 22-S-M5-PNP-SA | **0301448** | |
| MMS 22-S-M5-NPN-SA | **0301449** | |
| MMS 22-S-M8-PNP-SA | **0301442** | • |
| MMS 22-S-M8-NPN-SA | **0301443** | |
| MMSK 22-S-PNP-SA | **0301444** | |
| MMSK 22-S-NPN-SA | **0301445** | |
| Reed Switches | | |
| RMS 22-S-M8 | **0377720** | • |
| Connection cables | | |
| KA BG05-L 3P-0300 | **0301652** | |
| KA BG08-L 3P-0300-PNP | **0301622** | |
| KA BG08-L 3P-0500-PNP | **0301623** | |
| KA BW05-L 3P-0300 | **0301650** | |
| KA BW08-L 3P-0300-NPN | **0301602** | |
| KA BW08-L 3P-0300-PNP | **0301594** | |
| KA BW08-L 3P-0500-NPN | **9641116** | |
| KA BW08-L 3P-0500-PNP | **0301502** | |
| Cable extensions | | |
| KV BW08-SG08 3P-0030-PNP | **0301495** | |
| KV BW08-SG08 3P-0100-PNP | **0301496** | |
| KV BW08-SG08 3P-0200-PNP | **0301497** | |

ⓘ Two sensors (closer/NO) are required for each gripper, plus extension cables as an option.

ⓘ Please note the minimum permitted bending radii for the sensor cables, which are generally 35 mm.

You can find more detailed information and individual parts of the above-mentioned accessories in the “Accessories” catalog section.

## Mounting kit for proximity switch

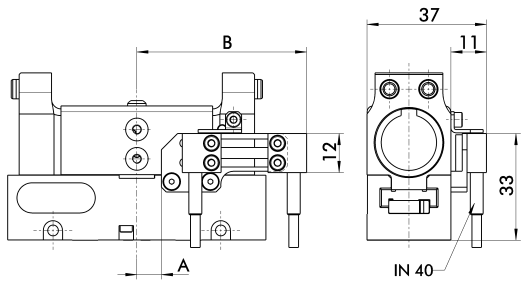


| Typ | A | B |
|---|---|---|
| KGG 80-30 | 5 | 51 |
| KGG 80-60 | 21 | 90 |

| Description | ID |
|---|---|
| Mounting kit for proximity switch | |
| AS-KGG 80-30 | **0303083** |
| AS-KGG 80-60 / 100-80 / 140-60 | **0303084** |

ⓘ This mounting kit needs to be ordered optionally as an accessory.

## Inductive proximity switches

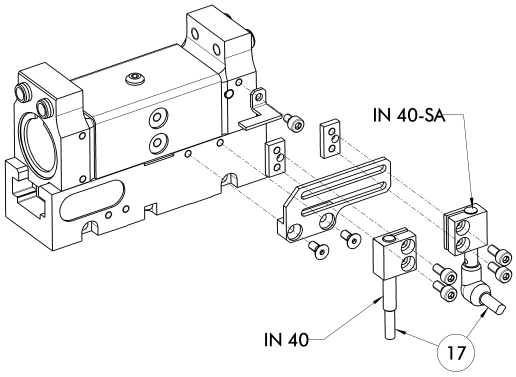


⑰ Cable outlet

End position monitoring mounted with mounting kit

| Description | ID | Recommended product |
|---|---|---|
| Mounting kit for proximity switch | | |
| AS-KGG 80-30 | **0303083** | |
| AS-KGG 80-60 / 100-80 / 140-60 | **0303084** | |
| Inductive proximity switches | | |
| IN 40-S-M8 | **0301474** | • |
| IN 40-S-M12 | **0301574** | |
| INK 40-S | **0301555** | |
| Inductive proximity switch with lateral outlet | | |
| IN 40-S-M12-SA | **0301577** | |
| IN 40-S-M8-SA | **0301473** | • |
| INK 40-S-SA | **0301565** | |

ⓘ Two sensors (closer/NO) are required for each gripper, plus extension cables as an option.
ⓘ This mounting kit needs to be ordered optionally as an accessory.
ⓘ Please note the minimum permitted bending radii for the sensor cables, which are generally 35 mm.

You can find more detailed information and individual parts of the above-mentioned accessories in the “Accessories” catalog section.

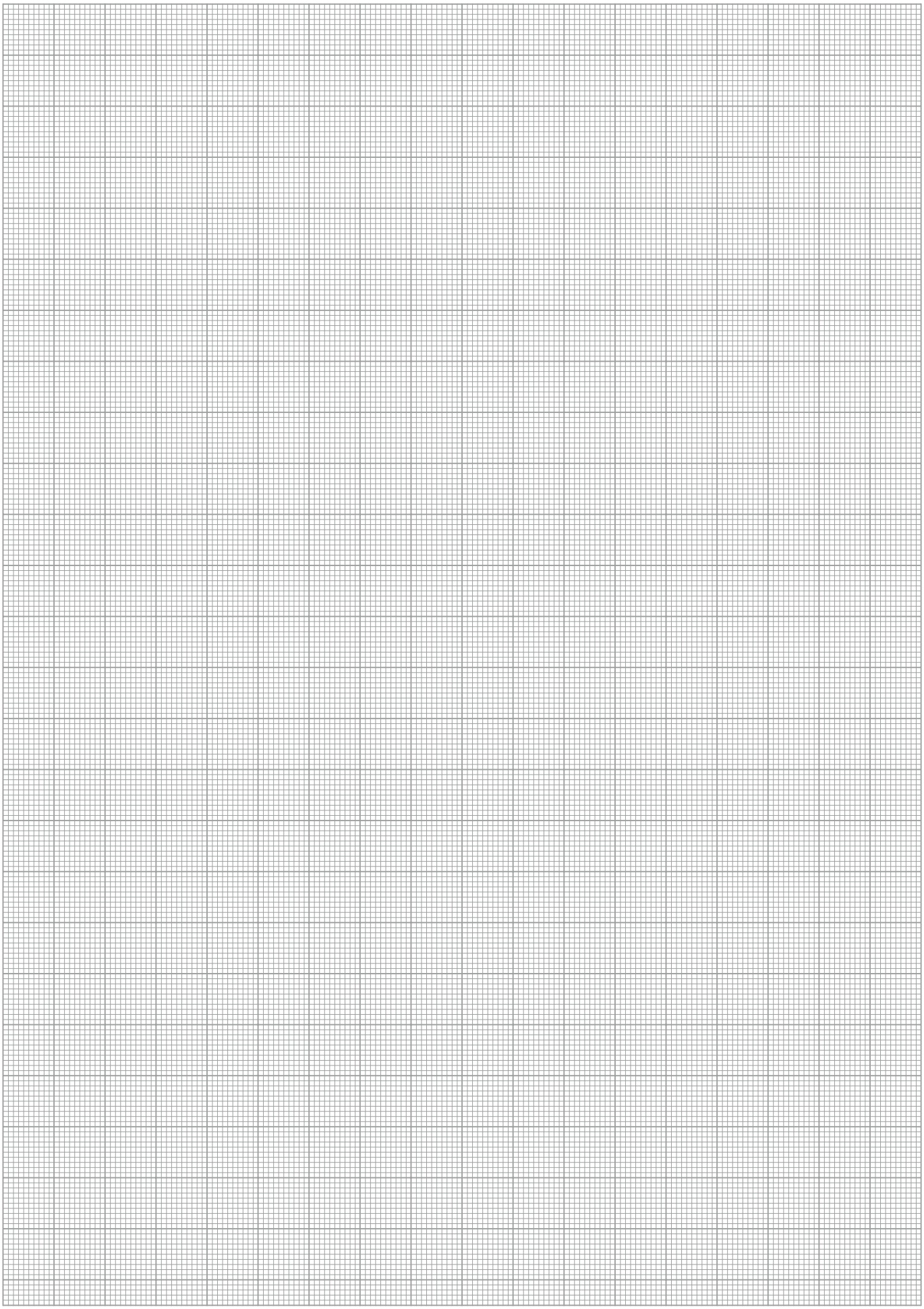

# KGG 100

**Pneumatic • 2-Finger Parallel Gripper • Gripper for small components**



## Gripping force, I.D. gripping

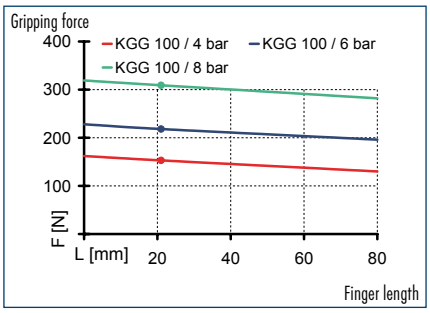


## Gripping force, O.D. gripping

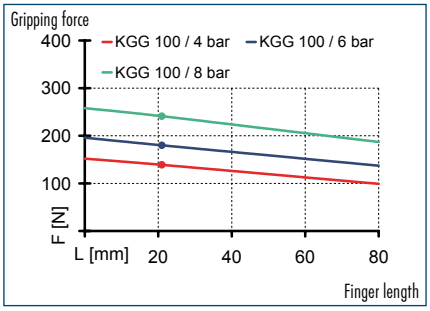


## Finger load

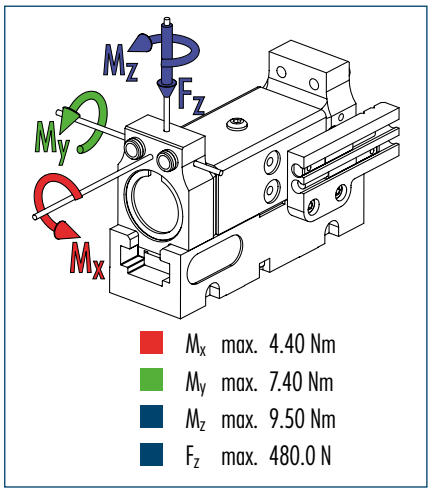


ⓘ The indicated moments and forces are static values, apply per base jaw and may occur simultaneously. $M_y$ may arise in addition to the moment generated by the gripping force itself. If the max. permitted finger weight is exceeded, it is imperative to throttle the air pressure so that the jaw movement occurs without any hitting or bouncing. Service life may be reduced.

## Technical data

| Description | | KGG 100-40 | KGG 100-80 |
|---|---|---|---|
| **ID** | | **0303065** | **0303066** |
| Stroke per finger | [mm] | 20 | 40 |
| Closing force | [N] | 175 | 175 |
| Opening force | [N] | 220 | 220 |
| Weight | [kg] | 0.37 | 0.5 |
| Recommended workpiece weight | [kg] | 0.9 | 0.9 |
| Air consumption per double stroke | [cm³] | 22.5 | 45 |
| Min./max. operating pressure | [bar] | 2/8 | 2/8 |
| Nominal operating pressure | [bar] | 6 | 6 |
| Closing/opening time | [s] | 0.09/0.07 | 0.19/0.15 |
| Max. permitted finger length | [mm] | 80 | 80 |
| Max. permitted weight per finger | [kg] | 0.3 | 0.3 |
| IP class | | 40 | 40 |
| Min./max. ambient temperature | [°C] | -10/90 | -10/90 |
| Repeat accuracy | [mm] | 0.02 | 0.02 |

ⓘ Requirements to the evenness of the mounting face (relating to the total gripper connection surface) less than 0.02 mm at an edge length of up to 100 mm / more than 0.05 mm at an edge length of more than 100 mm.

## Main view

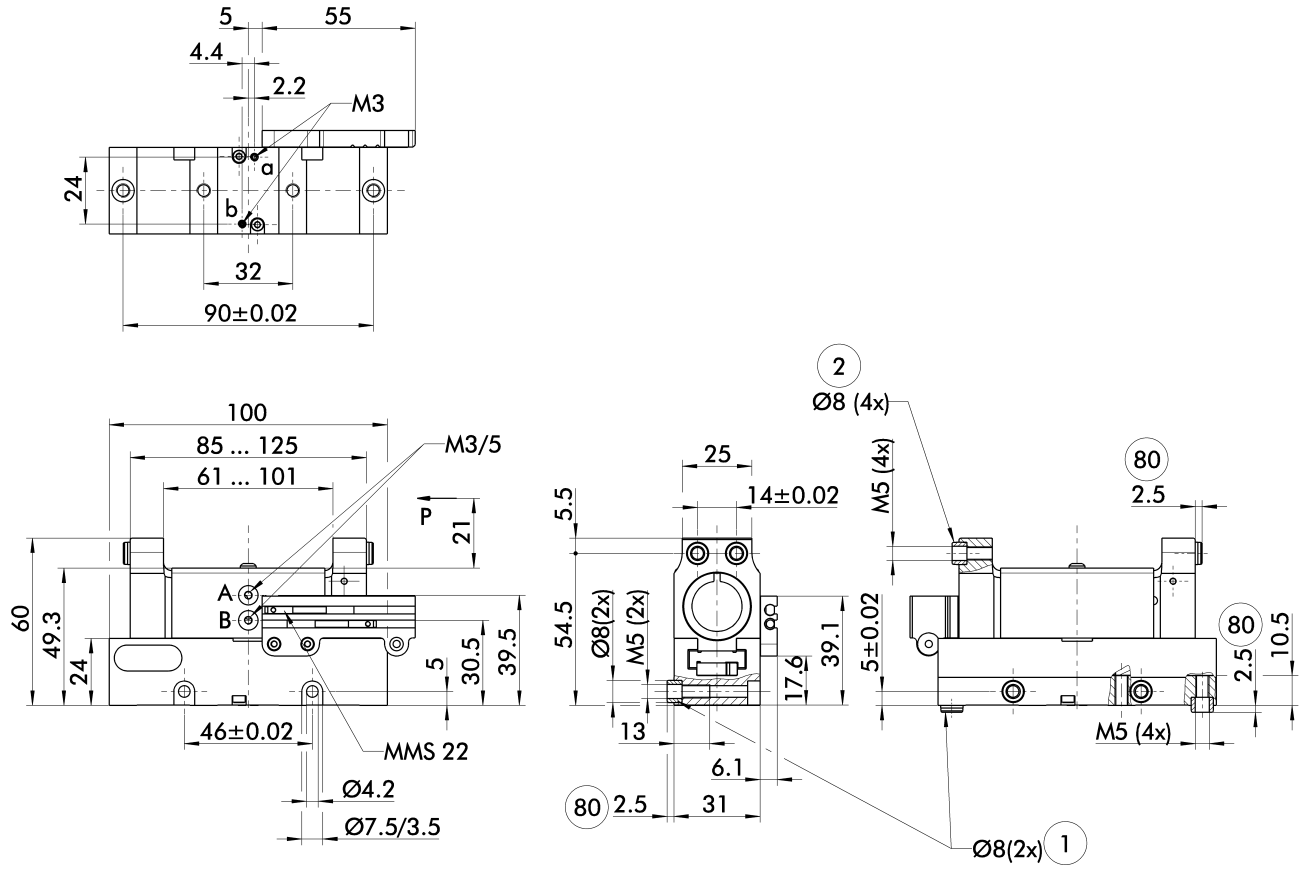


The drawing shows the gripper in the basic version with closed jaws, the dimensions do not include the options described below.

ⓘ The SDV-P pressure maintenance valve can be used as a gripping force maintenance device (see "Accessories" catalog section).

A, a Main/direct connection, gripper opening
B, b Main/direct connection, gripper closing
① Gripper connection
② Finger connection
(80) Depth of the centering sleeve hole in the matching part

## Stroke versions

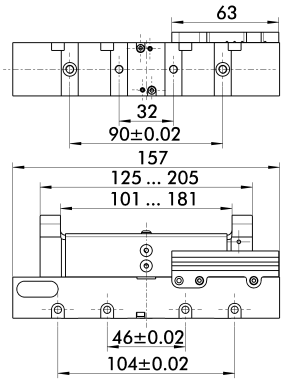


The drawing shows changes in dimensions of the versions with a differing stroke compared to the main view of the shown version.

## Hose-free direct connection

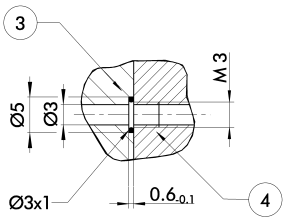


③ Adapter
④ Gripper

The direct connection is used for supplying compressed air without hoses. Instead, the pressure medium is fed through bore-holes in the mounting plate.

## Jaw design O.D. gripping

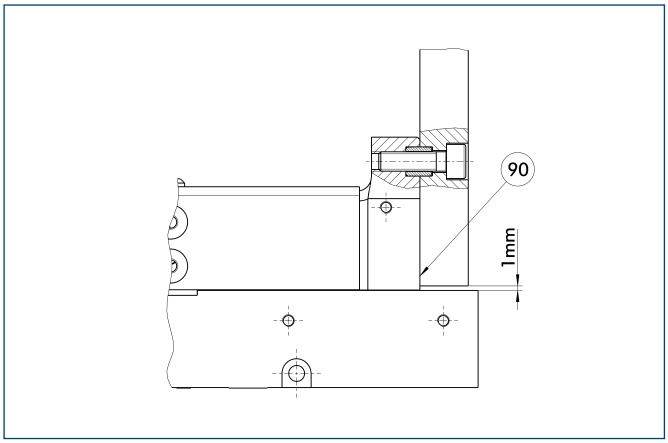


(90) Support top jaws at the base jaw

## Jaw design I.D. gripping

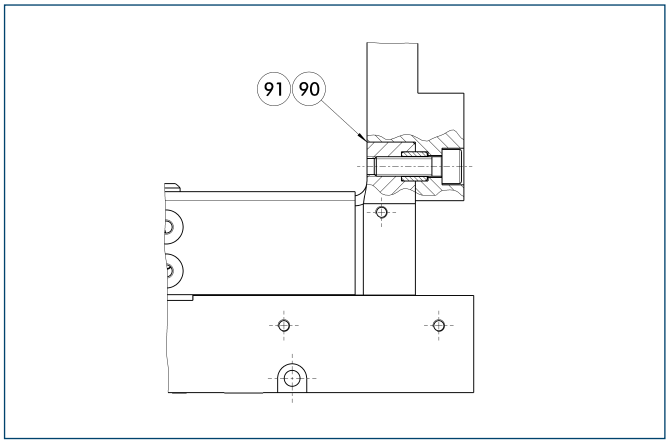


(90) Support top jaws at the base jaw
(91) For dimensions of steps at the top jaw see drawings of finger blanks

## Modular Assembly Automation

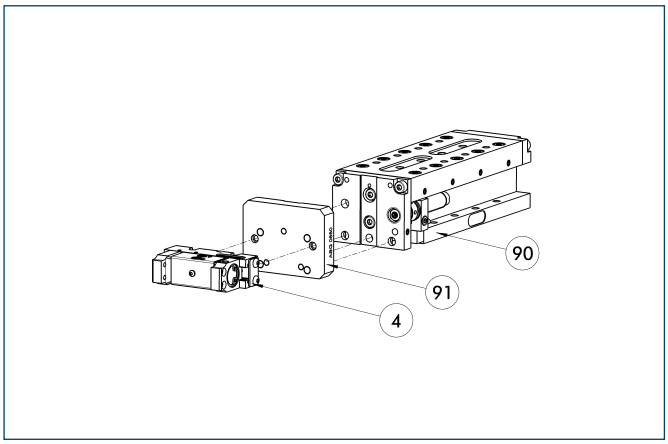


(4) Gripper
(90) CLM
(91) ASG

This gripper can be combined with the standard linear modules LM, KLM, CLM and ELM of the GEMOTEC modular system. For more information see our main catalog “Modular Assembly Automation”.

## Finger blanks

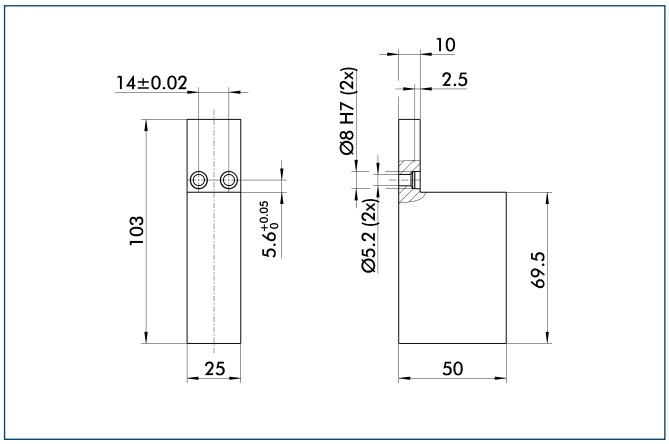


| Description | ID | Material | Scope of delivery |
|---|---|---|---|
| Finger blanks | | | |
| RB 100 | **0303090** | Aluminum | 2 |

You can find more detailed information and individual parts of the above-mentioned accessories in the “Accessories” catalog section.

## Electronic magnetic switches

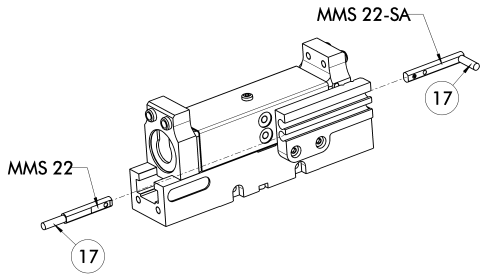


⑰ Cable outlet

End position monitoring for mounting in the C-slot

| Description | ID | Recommended product |
|---|---|---|
| Electronic magnetic switches | | |
| MMS 22-S-M5-PNP | **0301438** | |
| MMS 22-S-M5-NPN | **0301439** | |
| MMS 22-S-M8-PNP | **0301432** | • |
| MMS 22-S-M8-NPN | **0301433** | |
| MMSK 22-S-PNP | **0301434** | |
| MMSK 22-S-NPN | **0301435** | |
| Electronic magnetic switches with lateral cable outlet | | |
| MMS 22-S-M5-PNP-SA | **0301448** | |
| MMS 22-S-M5-NPN-SA | **0301449** | |
| MMS 22-S-M8-PNP-SA | **0301442** | • |
| MMS 22-S-M8-NPN-SA | **0301443** | |
| MMSK 22-S-PNP-SA | **0301444** | |
| MMSK 22-S-NPN-SA | **0301445** | |
| Reed Switches | | |
| RMS 22-S-M8 | **0377720** | • |
| Connection cables | | |
| KA BG05-L 3P-0300 | **0301652** | |
| KA BG08-L 3P-0300-PNP | **0301622** | |
| KA BG08-L 3P-0500-PNP | **0301623** | |
| KA BW05-L 3P-0300 | **0301650** | |
| KA BW08-L 3P-0300-NPN | **0301602** | |
| KA BW08-L 3P-0300-PNP | **0301594** | |
| KA BW08-L 3P-0500-NPN | **9641116** | |
| KA BW08-L 3P-0500-PNP | **0301502** | |
| Cable extensions | | |
| KV BW08-SG08 3P-0030-PNP | **0301495** | |
| KV BW08-SG08 3P-0100-PNP | **0301496** | |
| KV BW08-SG08 3P-0200-PNP | **0301497** | |

ⓘ Two sensors (closer/NO) are required for each gripper, plus extension cables as an option.

ⓘ Please note the minimum permitted bending radii for the sensor cables, which are generally 35 mm.

## Mounting kit for proximity switch

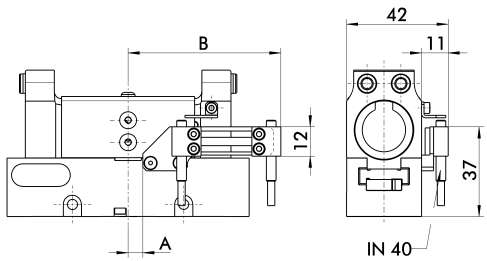


| Typ | A | B |
|---|---|---|
| KGG 100-40 | 6 | 63 |
| KGG 100-80 | 28 | 102 |

| Description | ID |
|---|---|
| Mounting kit for proximity switch | |
| AS-KGG 100-40 | **0303082** |
| AS-KGG 80-60 / 100-80 / 140-60 | **0303084** |

ⓘ This mounting kit needs to be ordered optionally as an accessory.

You can find more detailed information and individual parts of the above-mentioned accessories in the “Accessories” catalog section.

## Inductive proximity switches

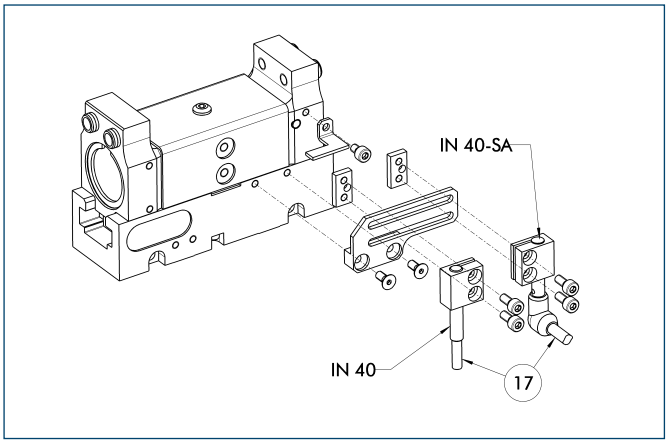


⑰ Cable outlet

End position monitoring mounted with mounting kit

| Description | ID | Recommended product |
|---|---|---|
| Mounting kit for proximity switch | | |
| AS-KGG 100-40 | **0303082** | |
| AS-KGG 80-60 / 100-80 / 140-60 | **0303084** | |
| Inductive proximity switches | | |
| IN 40-S-M8 | **0301474** | • |
| IN 40-S-M12 | **0301574** | |
| INK 40-S | **0301555** | |
| Inductive proximity switch with lateral outlet | | |
| IN 40-S-M12-SA | **0301577** | |
| IN 40-S-M8-SA | **0301473** | • |
| INK 40-S-SA | **0301565** | |

ⓘ Two sensors (closer/NO) are required for each gripper, plus extension cables as an option.
ⓘ This mounting kit needs to be ordered optionally as an accessory.
ⓘ Please note the minimum permitted bending radii for the sensor cables, which are generally 35 mm.

You can find more detailed information and individual parts of the above-mentioned accessories in the “Accessories” catalog section.

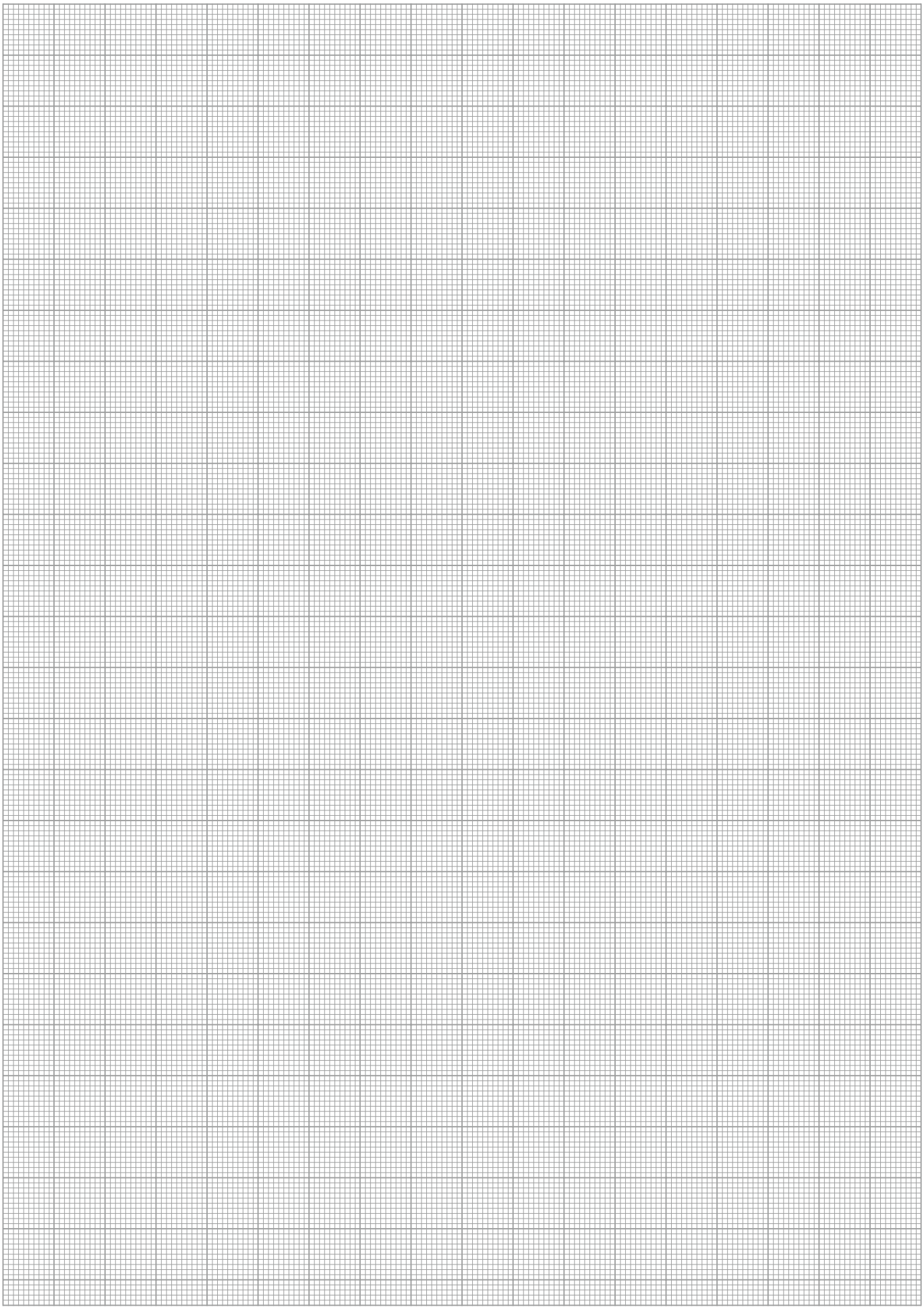

# KGG 140

**Pneumatic • 2-Finger Parallel Gripper • Gripper for small components**

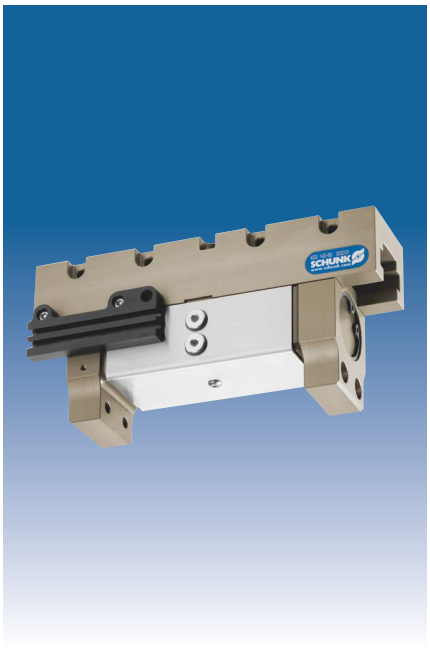

## Gripping force, I.D. gripping

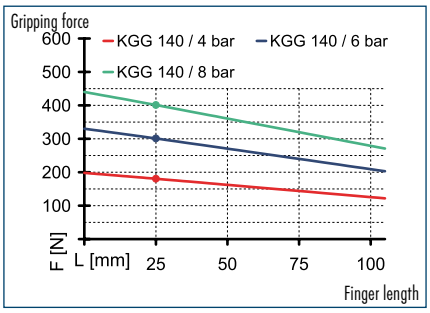


## Gripping force, O.D. gripping

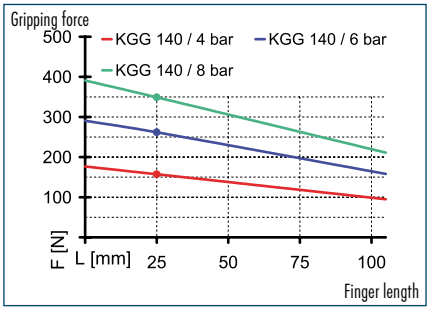


## Finger load

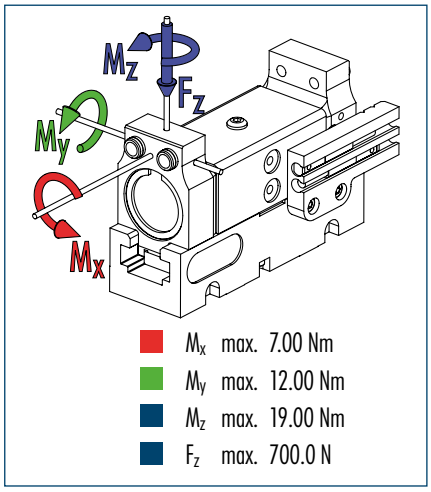


ⓘ The indicated moments and forces are static values, apply per base jaw and may occur simultaneously. $M_y$ may arise in addition to the moment generated by the gripping force itself. If the max. permitted finger weight is exceeded, it is imperative to throttle the air pressure so that the jaw movement occurs without any hitting or bouncing. Service life may be reduced.

## Technical data

| Description | | KGG 140-60 |
|---|---|---|
| **ID** | | **0303070** |
| Stroke per finger | [mm] | 30 |
| Closing force | [N] | 260 |
| Opening force | [N] | 300 |
| Weight | [kg] | 0.77 |
| Recommended workpiece weight | [kg] | 1.3 |
| Air consumption per double stroke | [cm³] | 42 |
| Min./max. operating pressure | [bar] | 2/8 |
| Nominal operating pressure | [bar] | 6 |
| Closing/opening time | [s] | 0.17/0.17 |
| Max. permitted finger length | [mm] | 100 |
| Max. permitted weight per finger | [kg] | 0.5 |
| IP class | | 40 |
| Min./max. ambient temperature | [°C] | -10/90 |
| Repeat accuracy | [mm] | 0.02 |

ⓘ Requirements to the evenness of the mounting face (relating to the total gripper connection surface) less than 0.02 mm at an edge length of up to 100 mm / more than 0.05 mm at an edge length of more than 100 mm.

## Main view

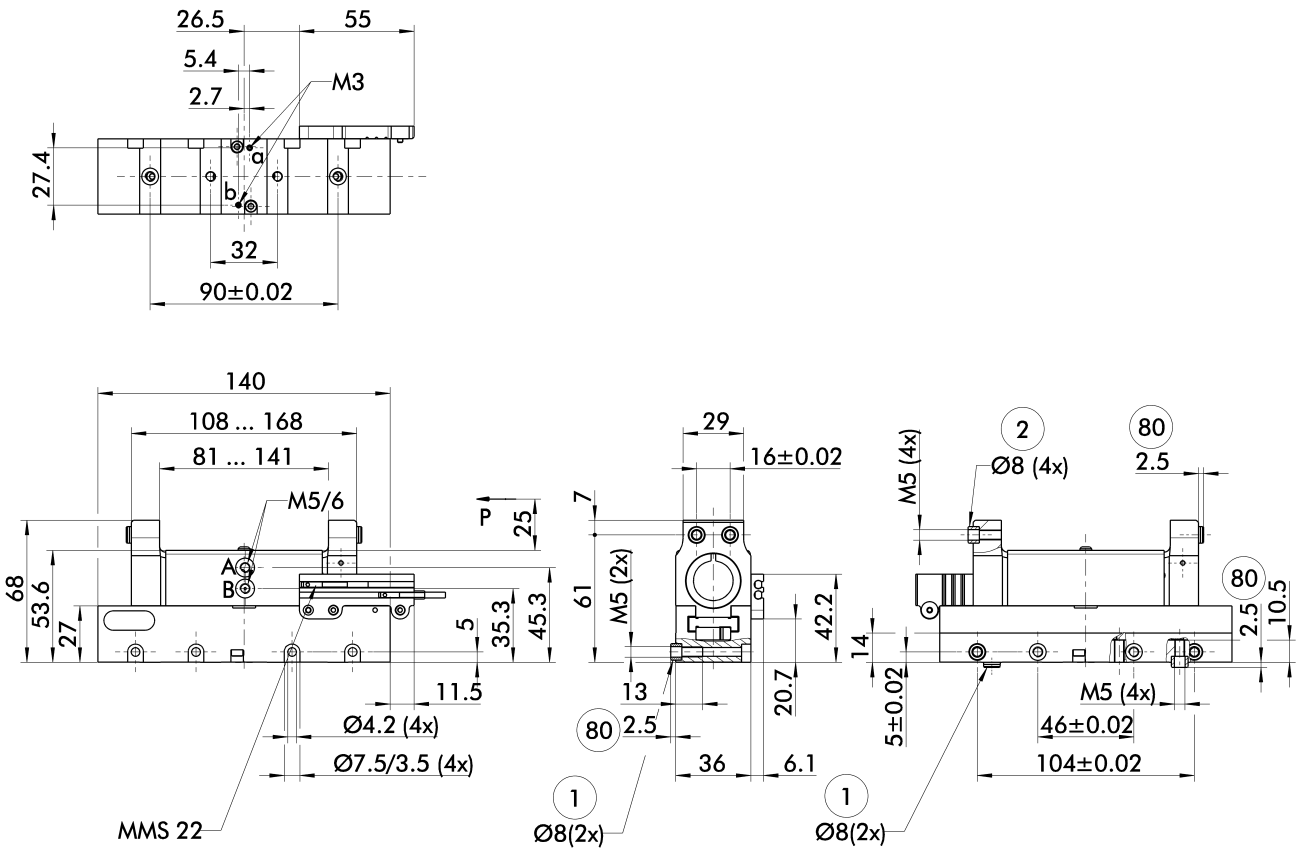


The drawing shows the gripper in the basic version with closed jaws, the dimensions do not include the options described below.

ⓘ The SDV-P pressure maintenance valve can be used as a gripping force maintenance device (see "Accessories" catalog section).

A, a Main/direct connection, gripper opening
B, b Main/direct connection, gripper closing
① Gripper connection
② Finger connection
(80) Depth of the centering sleeve hole in the matching part

## Hose-free direct connection

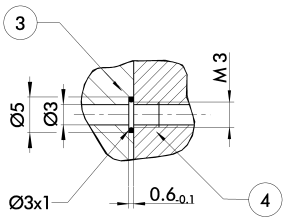


③ Adapter
④ Gripper

The direct connection is used for supplying compressed air without hoses. Instead, the pressure medium is fed through bore-holes in the mounting plate.

## Jaw design O.D. gripping

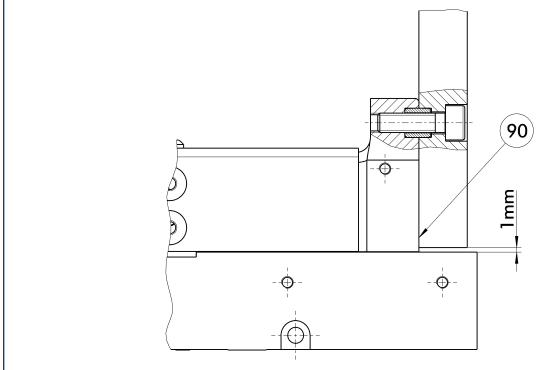


(90) Support top jaws at the base jaw

## Jaw design I.D. gripping

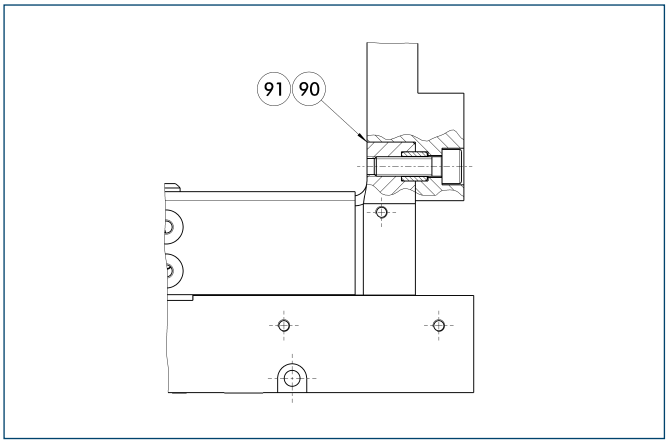


(90) Support top jaws at the base jaw
(91) For dimensions of steps at the top jaw see drawings of finger blanks

## Modular Assembly Automation

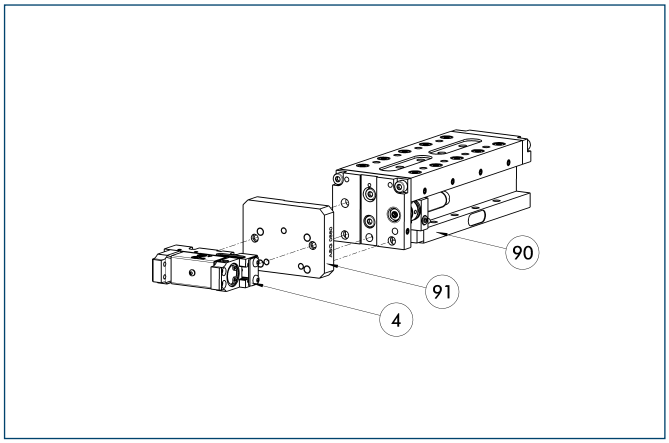


(4) Gripper
(90) CLM
(91) ASG

This gripper can be combined with the standard linear modules LM, KLM, CLM and ELM of the GEMOTEC modular system. For more information see our main catalog “Modular Assembly Automation”.

## Finger blanks

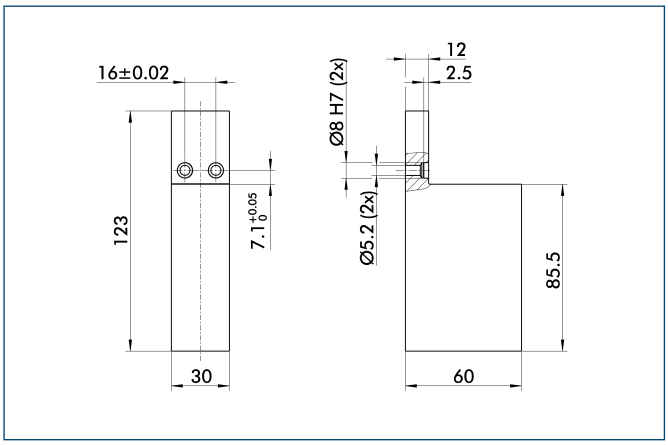


| Description | ID | Material | Scope of delivery |
|---|---|---|---|
| Finger blanks | | | |
| RB 140 | **0303091** | Aluminum | 2 |

You can find more detailed information and individual parts of the above-mentioned accessories in the “Accessories” catalog section.

## Electronic magnetic switches

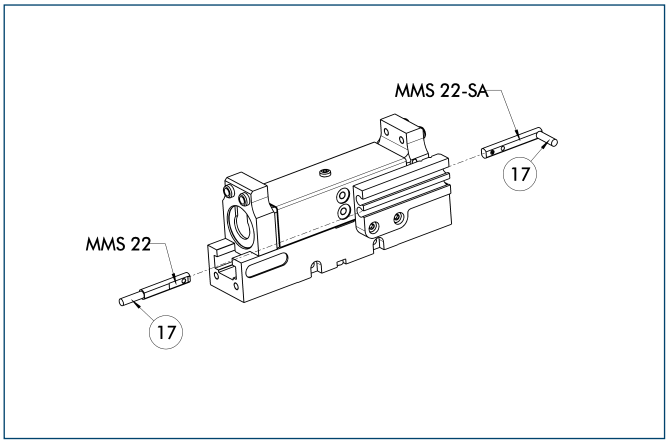


⑰ Cable outlet

End position monitoring for mounting in the C-slot

| Description | ID | Recommended product |
|---|---|---|
| Electronic magnetic switches | | |
| MMS 22-S-M5-PNP | **0301438** | |
| MMS 22-S-M5-NPN | **0301439** | |
| MMS 22-S-M8-PNP | **0301432** | • |
| MMS 22-S-M8-NPN | **0301433** | |
| MMSK 22-S-PNP | **0301434** | |
| MMSK 22-S-NPN | **0301435** | |
| Electronic magnetic switches with lateral cable outlet | | |
| MMS 22-S-M5-PNP-SA | **0301448** | |
| MMS 22-S-M5-NPN-SA | **0301449** | |
| MMS 22-S-M8-PNP-SA | **0301442** | • |
| MMS 22-S-M8-NPN-SA | **0301443** | |
| MMSK 22-S-PNP-SA | **0301444** | |
| MMSK 22-S-NPN-SA | **0301445** | |
| Reed Switches | | |
| RMS 22-S-M8 | **0377720** | • |
| Connection cables | | |
| KA BG05-L 3P-0300 | **0301652** | |
| KA BG08-L 3P-0300-PNP | **0301622** | |
| KA BG08-L 3P-0500-PNP | **0301623** | |
| KA BW05-L 3P-0300 | **0301650** | |
| KA BW08-L 3P-0300-NPN | **0301602** | |
| KA BW08-L 3P-0300-PNP | **0301594** | |
| KA BW08-L 3P-0500-NPN | **9641116** | |
| KA BW08-L 3P-0500-PNP | **0301502** | |
| Cable extensions | | |
| KV BW08-SG08 3P-0030-PNP | **0301495** | |
| KV BW08-SG08 3P-0100-PNP | **0301496** | |
| KV BW08-SG08 3P-0200-PNP | **0301497** | |

ⓘ Two sensors (closer/NO) are required for each gripper, plus extension cables as an option.

ⓘ Please note the minimum permitted bending radii for the sensor cables, which are generally 35 mm.

## Mounting kit for proximity switch

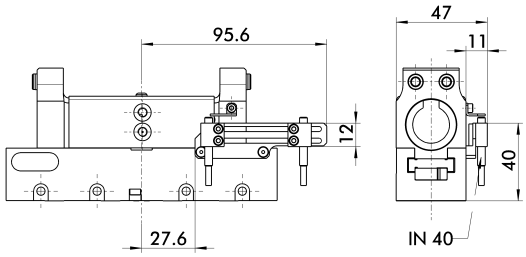


| Description | ID |
|---|---|
| Mounting kit for proximity switch | |
| AS-KGG 80-60 / 100-80 / 140-60 | **0303084** |

ⓘ This mounting kit needs to be ordered optionally as an accessory.

You can find more detailed information and individual parts of the above-mentioned accessories in the “Accessories” catalog section.

## Inductive proximity switches

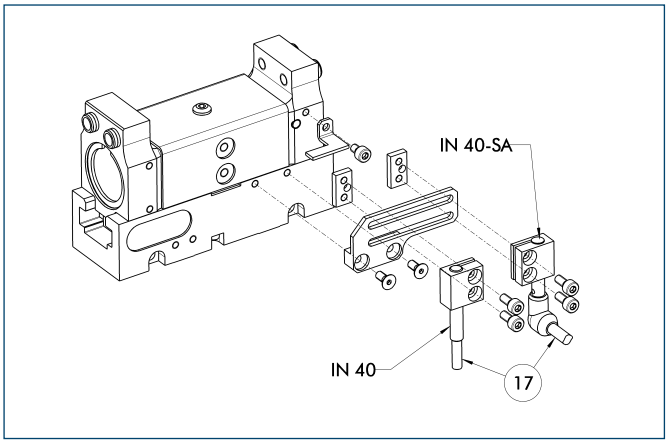


⑰ Cable outlet

End position monitoring mounted with mounting kit

| Description | ID | Recommended product |
|---|---|---|
| Mounting kit for proximity switch | | |
| AS-KGG 80-60 / 100-80 / 140-60 | **0303084** | |
| Inductive proximity switches | | |
| IN 40-S-M8 | **0301474** | • |
| IN 40-S-M12 | **0301574** | |
| INK 40-S | **0301555** | |
| Inductive proximity switch with lateral outlet | | |
| IN 40-S-M12-SA | **0301577** | |
| IN 40-S-M8-SA | **0301473** | • |
| INK 40-S-SA | **0301565** | |

ⓘ Two sensors (closer/NO) are required for each gripper, plus extension cables as an option.
ⓘ This mounting kit needs to be ordered optionally as an accessory.
ⓘ Please note the minimum permitted bending radii for the sensor cables, which are generally 35 mm.

You can find more detailed information and individual parts of the above-mentioned accessories in the “Accessories” catalog section.

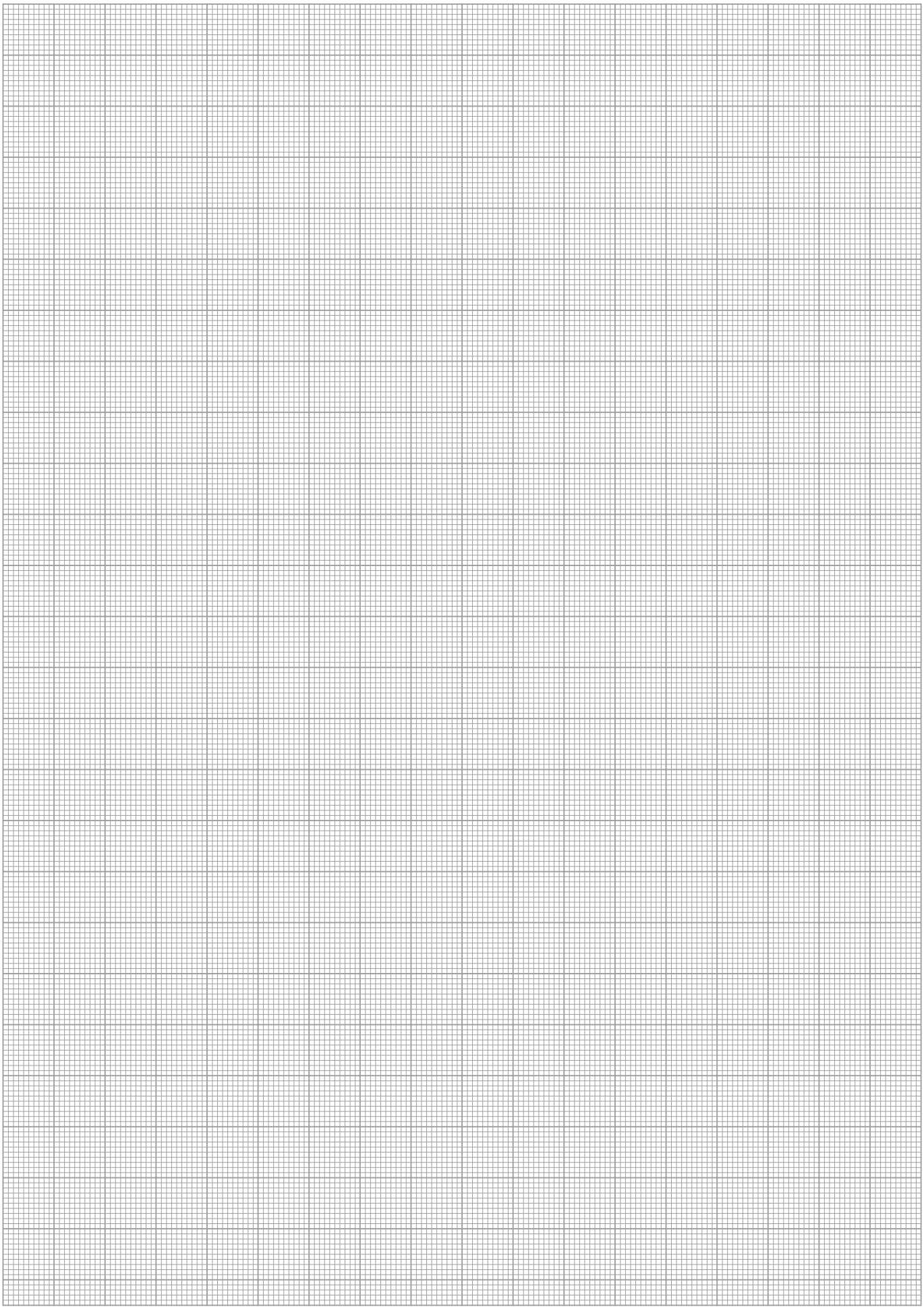

# KGG 220

**Pneumatic • 2-Finger Parallel Gripper • Gripper for small components**



## Gripping force, I.D. gripping

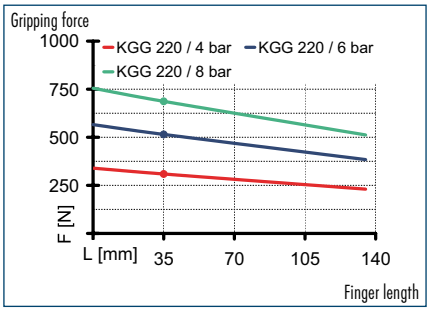


## Gripping force, O.D. gripping

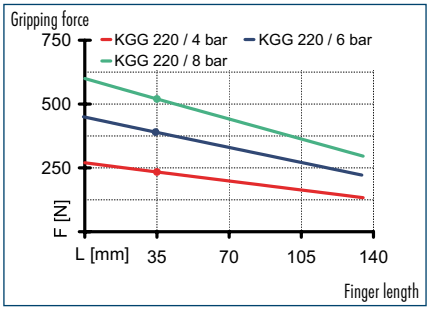


## Finger load

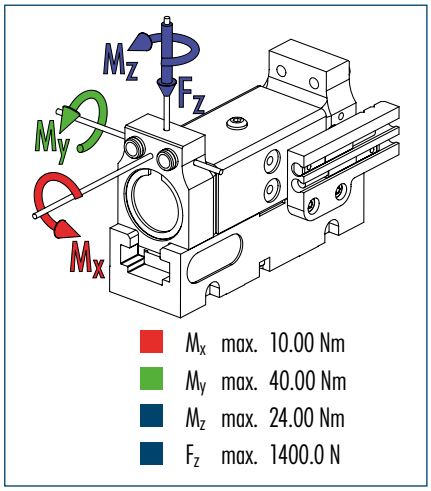


ⓘ The indicated moments and forces are static values, apply per base jaw and may occur simultaneously. $M_y$ may arise in addition to the moment generated by the gripping force itself. If the max. permitted finger weight is exceeded, it is imperative to throttle the air pressure so that the jaw movement occurs without any hitting or bouncing. Service life may be reduced.

## Technical data

| Description | | KGG 220 |
|---|---|---|
| **ID** | | **0340312** |
| Stroke per finger | [mm] | 45 |
| Closing force | [N] | 390 |
| Opening force | [N] | 515 |
| Weight | [kg] | 2 |
| Recommended workpiece weight | [kg] | 1.95 |
| Air consumption per double stroke | [cm³] | 98 |
| Min./max. operating pressure | [bar] | 2.5/8 |
| Nominal operating pressure | [bar] | 6 |
| Closing/opening time | [s] | 0.25/0.25 |
| Max. permitted finger length | [mm] | 130 |
| Max. permitted weight per finger | [kg] | 1 |
| IP class | | 30 |
| Min./max. ambient temperature | [°C] | -10/90 |
| Repeat accuracy | [mm] | 0.05 |

ⓘ Requirements to the evenness of the mounting face (relating to the total gripper connection surface) less than 0.02 mm at an edge length of up to 100 mm / more than 0.05 mm at an edge length of more than 100 mm.

## Main view

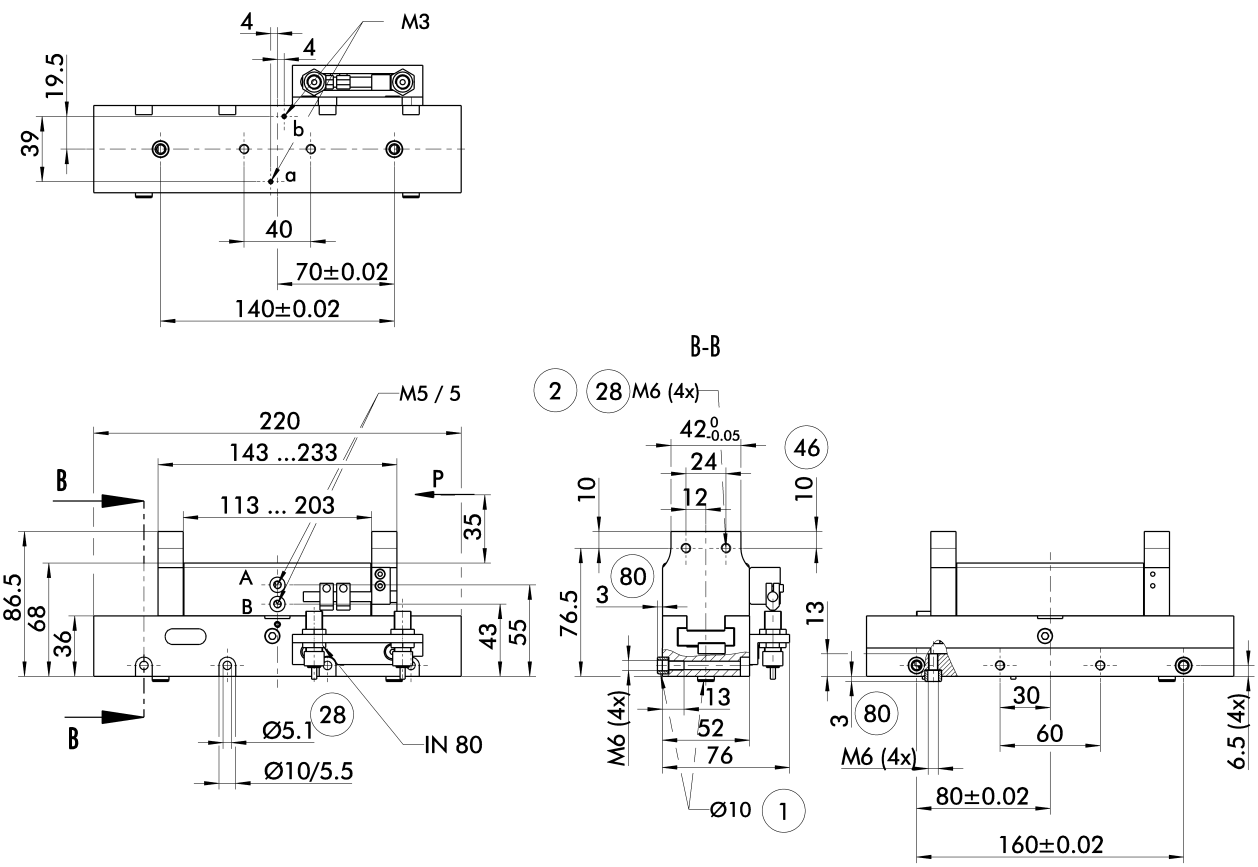


The drawing shows the gripper in the basic version with closed jaws, the dimensions do not include the options described below.

ⓘ The SDV-P pressure maintenance valve can be used as a gripping force maintenance device (see "Accessories" catalog section).

A, a Main/direct connection, gripper opening
B, b Main/direct connection, gripper closing
① Gripper connection
② Finger connection
㉘ Through-bore
㊻ Fitting length
㊽ Depth of the centering sleeve hole in the matching part

## Hose-free direct connection

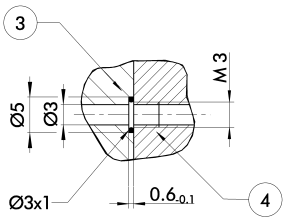


③ Adapter
④ Gripper

The direct connection is used for supplying compressed air without hoses. Instead, the pressure medium is fed through bore-holes in the mounting plate.

## Finger design

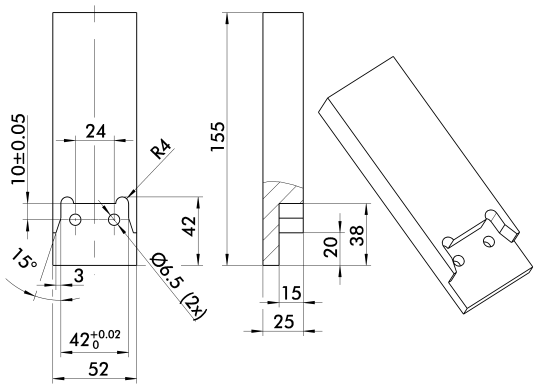


Suggestion for connection dimensions of the gripper fingers

## Finger blanks

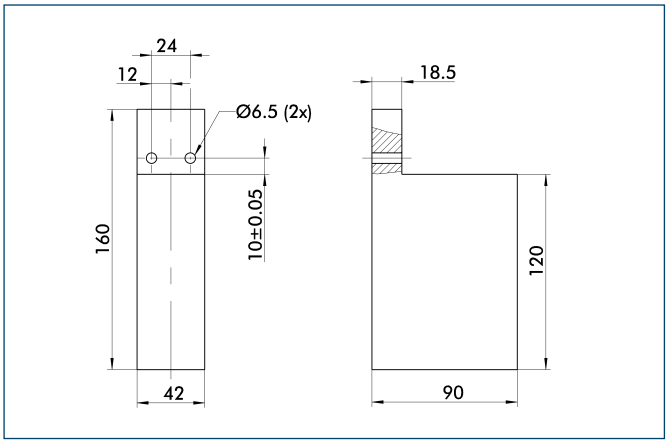


| Description | ID | Material | Scope of delivery |
|---|---|---|---|
| Finger blanks | | | |
| RB 220 | **0300286** | Aluminum | 2 |

## Inductive proximity switches

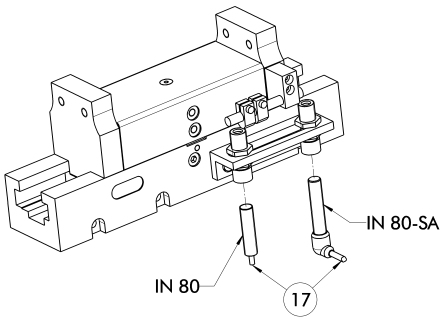


⑰ Cable outlet

End position monitoring for direct mounting

| Description | ID | Recommended product |
|---|---|---|
| Inductive proximity switches | | |
| IN 80-S-M8 | **0301478** | • |
| IN 80-S-M12 | **0301578** | |
| INK 80-S | **0301550** | |
| Inductive proximity switch with lateral outlet | | |
| IN 80-S-M12-SA | **0301587** | |
| IN 80-S-M8-SA | **0301483** | • |
| INK 80-S-SA | **0301566** | |
| Connection cables | | |
| KA BG08-L 3P-0300-PNP | **0301622** | |
| KA BG08-L 3P-0500-PNP | **0301623** | |
| KA BG12-L 3P-0500-PNP | **30016369** | |
| KA BW08-L 3P-0300-PNP | **0301594** | |
| KA BW08-L 3P-0500-PNP | **0301502** | |
| KA BW12-L 3P-0300-PNP | **0301503** | |
| KA BW12-L 3P-0500-PNP | **0301507** | |
| Cable extensions | | |
| KV BG12-SG12 3P-0030-PNP | **0301999** | |
| KV BG12-SG12 3P-0060-PNP | **0301998** | |
| KV BW08-SG08 3P-0030-PNP | **0301495** | |
| KV BW08-SG08 3P-0100-PNP | **0301496** | |
| KV BW08-SG08 3P-0200-PNP | **0301497** | |
| KV BW12-SG12 3P-0030-PNP | **0301595** | |
| KV BW12-SG12 3P-0100-PNP | **0301596** | |
| KV BW12-SG12 3P-0200-PNP | **0301597** | |

ⓘ Two sensors (closer/NO) are required for each gripper, plus extension cables as an option.

ⓘ Please note the minimum permitted bending radii for the sensor cables, which are generally 35 mm.


You can find more detailed information and individual parts of the above-mentioned accessories in the “Accessories” catalog section.

# KGG 280

**Pneumatic • 2-Finger Parallel Gripper • Gripper for small components**



## Gripping force, I.D. gripping

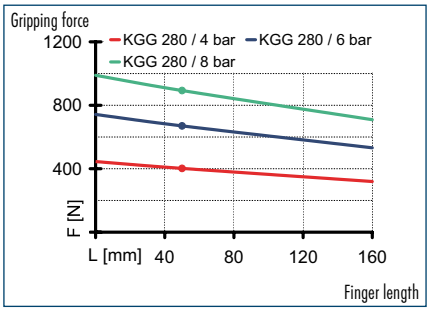


## Gripping force, O.D. gripping

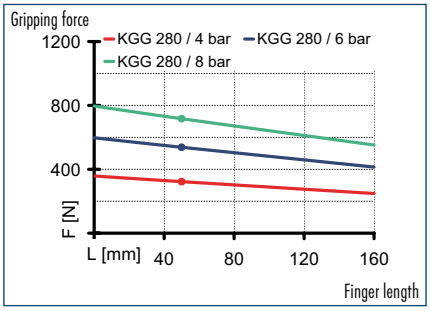


## Finger load

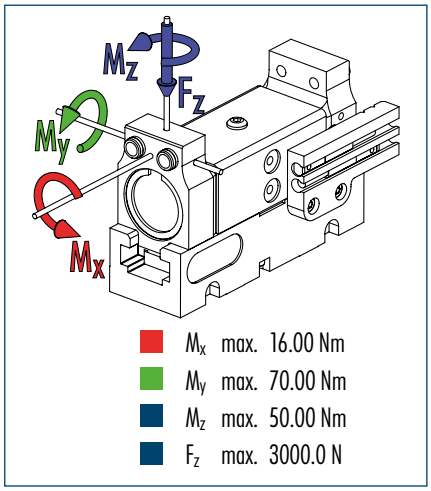


ⓘ The indicated moments and forces are static values, apply per base jaw and may occur simultaneously. $M_y$ may arise in addition to the moment generated by the gripping force itself. If the max. permitted finger weight is exceeded, it is imperative to throttle the air pressure so that the jaw movement occurs without any hitting or bouncing. Service life may be reduced.

## Technical data

| Description | | KGG 280 |
|---|---|---|
| **ID** | | **0340313** |
| Stroke per finger | [mm] | 60 |
| Closing force | [N] | 540 |
| Opening force | [N] | 670 |
| Weight | [kg] | 4.2 |
| Recommended workpiece weight | [kg] | 2.7 |
| Air consumption per double stroke | [cm³] | 170 |
| Min./max. operating pressure | [bar] | 2.5/8 |
| Nominal operating pressure | [bar] | 6 |
| Closing/opening time | [s] | 0.29/0.25 |
| Max. permitted finger length | [mm] | 160 |
| Max. permitted weight per finger | [kg] | 2 |
| IP class | | 30 |
| Min./max. ambient temperature | [°C] | -10/90 |
| Repeat accuracy | [mm] | 0.1 |

ⓘ Requirements to the evenness of the mounting face (relating to the total gripper connection surface) less than 0.02 mm at an edge length of up to 100 mm / more than 0.05 mm at an edge length of more than 100 mm.

## Main view

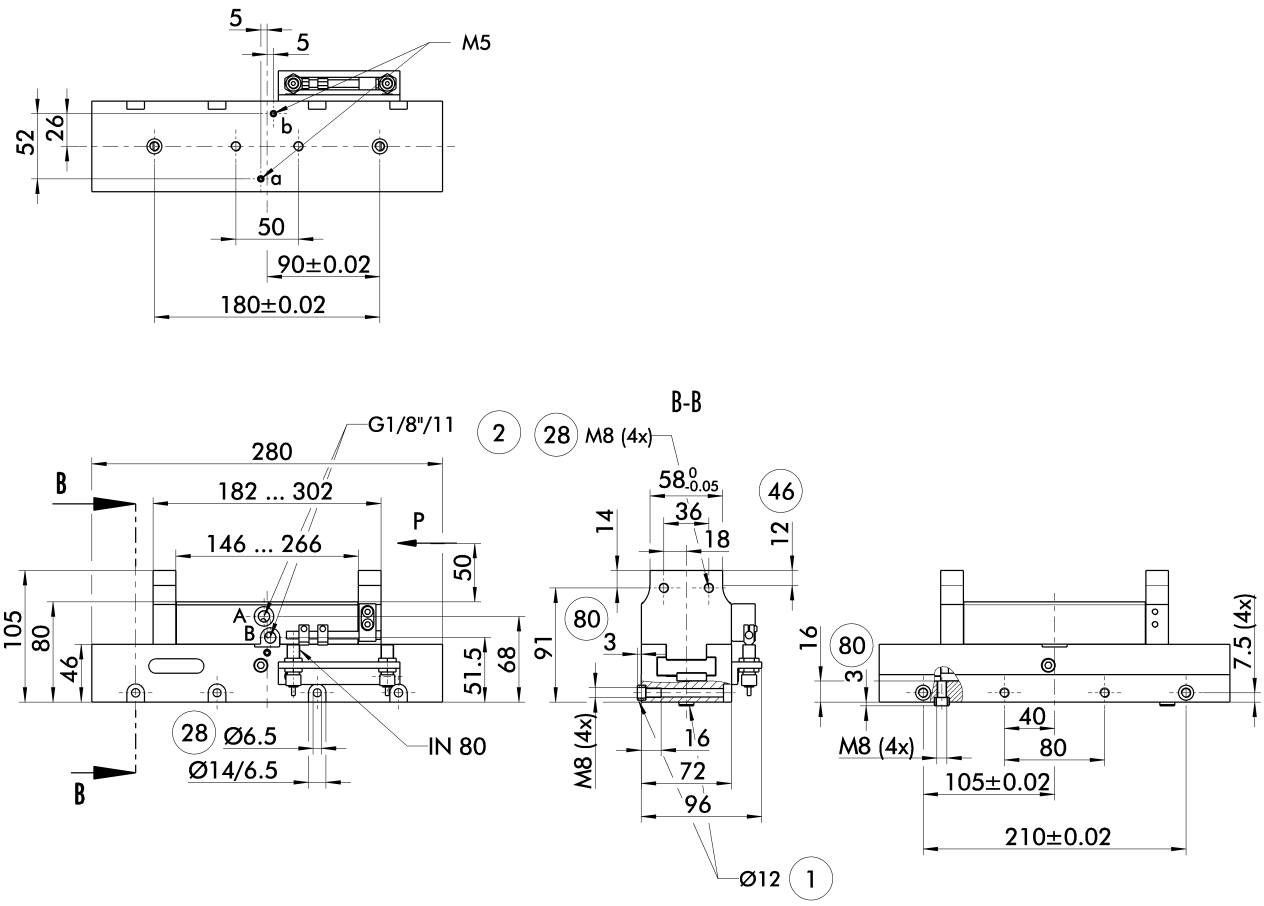


The drawing shows the gripper in the basic version with closed jaws, the dimensions do not include the options described below.

ⓘ The SDV-P pressure maintenance valve can be used as a gripping force maintenance device (see "Accessories" catalog section).

A, a Main/direct connection, gripper opening
B, b Main/direct connection, gripper closing
① Gripper connection
② Finger connection
㉘ Through-bore
㊻ Fitting length
㊽ Depth of the centering sleeve hole in the matching part

## Hose-free direct connection

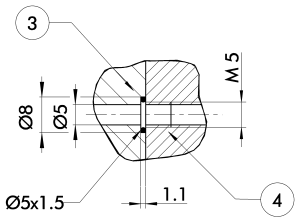


③ Adapter
④ Gripper

The direct connection is used for supplying compressed air without hoses. Instead, the pressure medium is fed through bore-holes in the mounting plate.

## Finger design

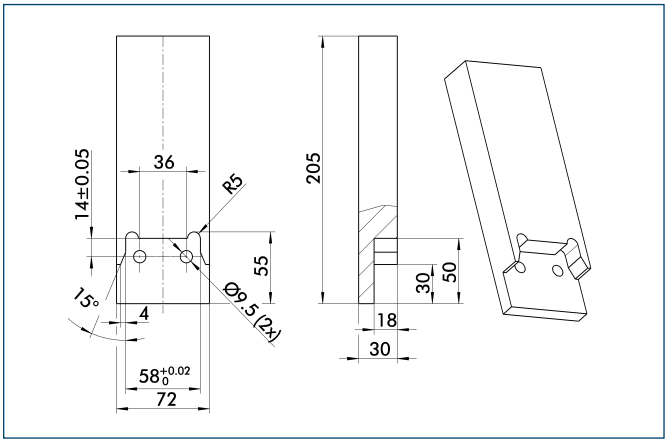


Suggestion for connection dimensions of the gripper fingers

## Finger blanks

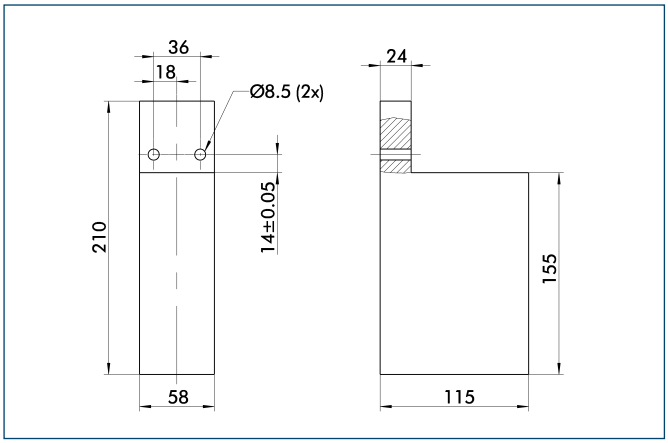


| Description | ID | Material | Scope of delivery |
|---|---|---|---|
| Finger blanks | | | |
| RB 280 | **0300287** | Aluminum | 2 |

## Inductive proximity switches

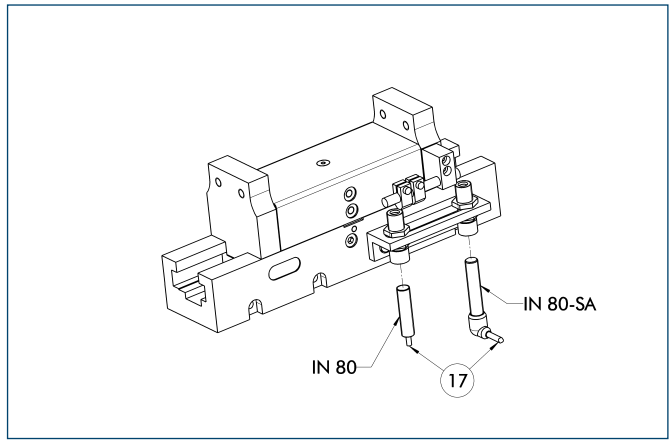


⑰ Cable outlet

End position monitoring for direct mounting

| Description | ID | Recommended product |
|---|---|---|
| Inductive proximity switches | | |
| IN 80-S-M8 | **0301478** | • |
| IN 80-S-M12 | **0301578** | |
| INK 80-S | **0301550** | |
| Inductive proximity switch with lateral outlet | | |
| IN 80-S-M12-SA | **0301587** | |
| IN 80-S-M8-SA | **0301483** | • |
| INK 80-S-SA | **0301566** | |
| Connection cables | | |
| KA BG08-L 3P-0300-PNP | **0301622** | |
| KA BG08-L 3P-0500-PNP | **0301623** | |
| KA BG12-L 3P-0500-PNP | **30016369** | |
| KA BW08-L 3P-0300-PNP | **0301594** | |
| KA BW08-L 3P-0500-PNP | **0301502** | |
| KA BW12-L 3P-0300-PNP | **0301503** | |
| KA BW12-L 3P-0500-PNP | **0301507** | |
| Cable extensions | | |
| KV BG12-SG12 3P-0030-PNP | **0301999** | |
| KV BG12-SG12 3P-0060-PNP | **0301998** | |
| KV BW08-SG08 3P-0030-PNP | **0301495** | |
| KV BW08-SG08 3P-0100-PNP | **0301496** | |
| KV BW08-SG08 3P-0200-PNP | **0301497** | |
| KV BW12-SG12 3P-0030-PNP | **0301595** | |
| KV BW12-SG12 3P-0100-PNP | **0301596** | |
| KV BW12-SG12 3P-0200-PNP | **0301597** | |

ⓘ Two sensors (closer/NO) are required for each gripper, plus extension cables as an option.

ⓘ Please note the minimum permitted bending radii for the sensor cables, which are generally 35 mm.

You can find more detailed information and individual parts of the above-mentioned accessories in the “Accessories” catalog section.

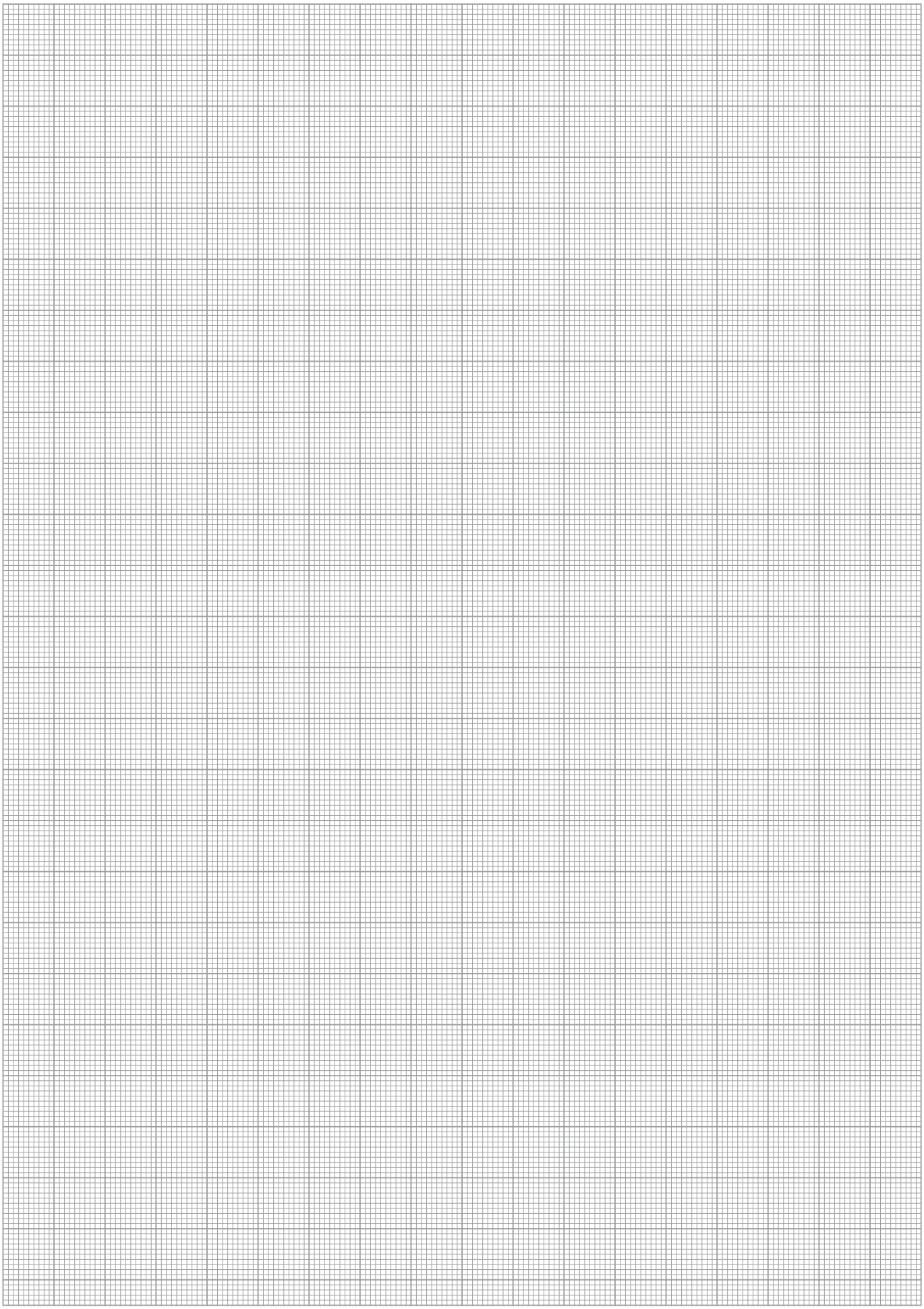

**Sizes**
801 ... 9010

**Weight**
0.04 kg ... 1.1 kg

**Gripping force**
13 N ... 460 N

**Stroke per finger**
2.5 mm ... 40 mm

**Workpiece weight**
0.065 kg ... 2.3 kg

## Application example

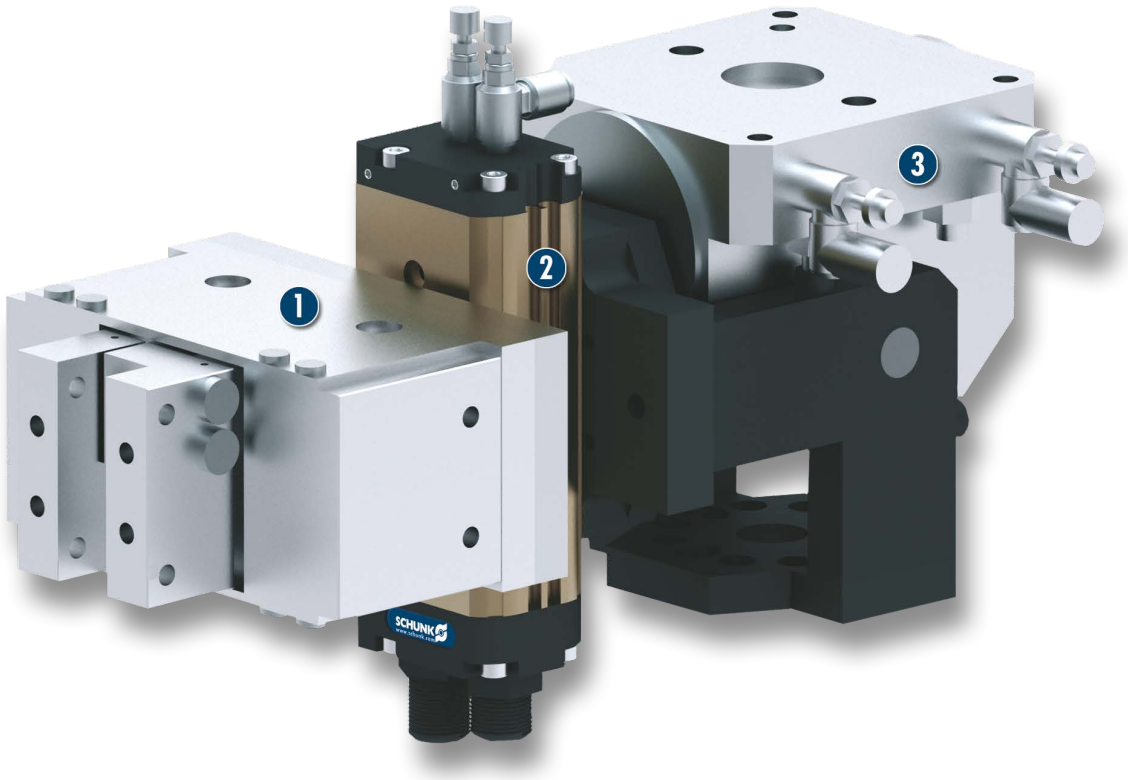


Transfer station with simultaneous 90° reorientation of the workpiece in two axes

1. RH Gripper for small components
2. SRU-mini Miniature Rotary Unit
3. SKE Rotary Actuator

## Gripper for small components

The RH series is a low-price gripping system, which is particularly suitable for light applications

## Field of application

for use in clean environmental conditions (e.g. assembly or packaging zones) with low process forces

## Your advantages and benefits

**Economical gripper series**
for simple applications with low loads in clean environments

**Maintenance-free**
with low weight

**Excellent price-performance ratio**
making it an attractive option for low-budget applications




## General note to the series

**Principle of function**
Wedge-hook kinematics

**Actuation**
pneumatic, with filtered compressed air (10 microns): dry, lubricated or non-lubricated
Pressure medium: Required quality class of compressed air according to DIN ISO 8573-1: 6 4 4

**Warranty**
24 months (details, general terms and conditions and operation manuals can be downloaded under www.schunk.com)

**Scope of delivery**
Centering elements, assembly and operating instruction with manufacturer's declaration




## Functional description

RH grippers work with pneumatic pistons, which produce a synchronized motion due to kinematics that vary depending on the type.

## Options and special information

In order to keep the manufacturing costs and thus the sales prices low, the RH series is designed for low-cost production. Therefore repair works are generally not economically feasible.

## Accessories

Accessories from SCHUNK – the suitable supplement for maximum functionality, reliability and performance of all automation modules.

### Fittings



### Sensor system



### Sensor cables



### Pressure maintenance valve



### Plastic inserts






### Gripper pads

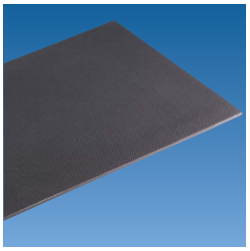

ⓘ For the exact size of the required accessories, availability of this size and the designation and ID, please refer to the additional views at the end of the size in question. You will find more detailed information on our accessory range in the “Accessories” catalog section.

## General note to the series

### Gripping force

is the arithmetic total of the gripping force applied to each finger at distance P (see illustration) measured from the upper edge of the gripper.

### Finger length

The finger length is measured from the upper edge of the gripper housing in the direction of the main axis.

### Repeat accuracy

is defined as the spread of the limit position after 100 consecutive strokes.

### Workpiece weight

The recommended workpiece weight is calculated for a force-type connection with a coefficient of friction of 0.1 and a safety factor of 2 against slippage of the workpiece on acceleration due to gravity g. Considerably heavier workpiece weights are permitted with form-fit gripping.

### Closing and opening times

Closing and opening times are purely the times that the base jaws or fingers are in motion. Valve switching times, hose filling times or PLC reaction times are not included in the above times and must be taken into consideration when determining cycle times.

# RH 901K

**Pneumatic • 2-Finger Parallel Gripper • Gripper for small components**




## Sensor switching characteristics

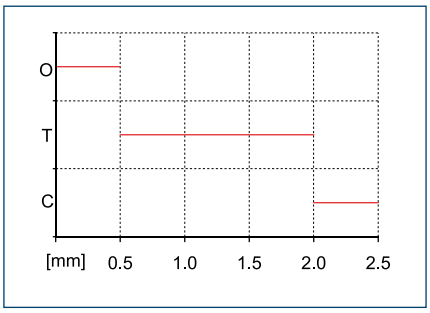


## Finger load

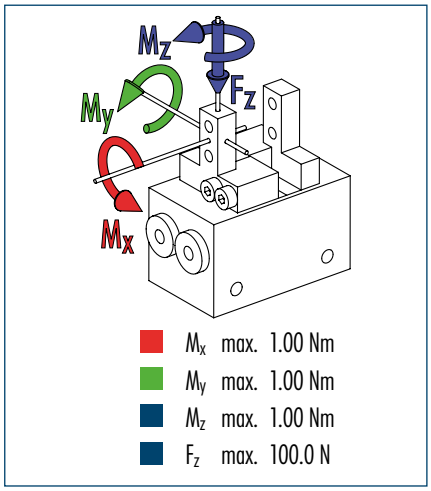


ⓘ The indicated moments and forces are static values, apply per base jaw and may occur simultaneously. $M_y$ may arise in addition to the moment generated by the gripping force itself. If the max. permitted finger weight is exceeded, it is imperative to throttle the air pressure so that the jaw movement occurs without any hitting or bouncing. Service life may be reduced.

## Technical data

| Description | | RH 901K | RH 901K-FS OC 5 | RH 901K-FS OT 5 | RH 901K-FS TC 5 |
|---|---|---|---|---|---|
| **ID** | | **0360131** | **0360132** | **0360133** | **0360134** |
| Stroke per finger | [mm] | 2.5 | 2.5 | 2.5 | 2.5 |
| Closing force | [N] | 13 | 13 | 13 | 13 |
| Opening force | [N] | 13 | 13 | 13 | 13 |
| Weight | [kg] | 0.04 | 0.04 | 0.04 | 0.04 |
| Recommended workpiece weight | [kg] | 0.065 | 0.065 | 0.065 | 0.065 |
| Air consumption per double stroke | [cm³] | 1 | 1 | 1 | 1 |
| Min./max. operating pressure | [bar] | 2/7 | 2/7 | 2/7 | 2/7 |
| Nominal operating pressure | [bar] | 6 | 6 | 6 | 6 |
| Closing/opening time | [s] | 0.06/0.06 | 0.06/0.06 | 0.06/0.06 | 0.06/0.06 |
| Max. permitted finger length | [mm] | 35 | 35 | 35 | 35 |
| Max. permitted weight per finger | [kg] | 0.02 | 0.02 | 0.02 | 0.02 |
| IP class | | 30 | 30 | 30 | 30 |
| Min./max. ambient temperature | [°C] | 5/60 | 5/60 | 5/60 | 5/60 |
| Repeat accuracy | [mm] | 0.01 | 0.01 | 0.01 | 0.01 |

## Main view

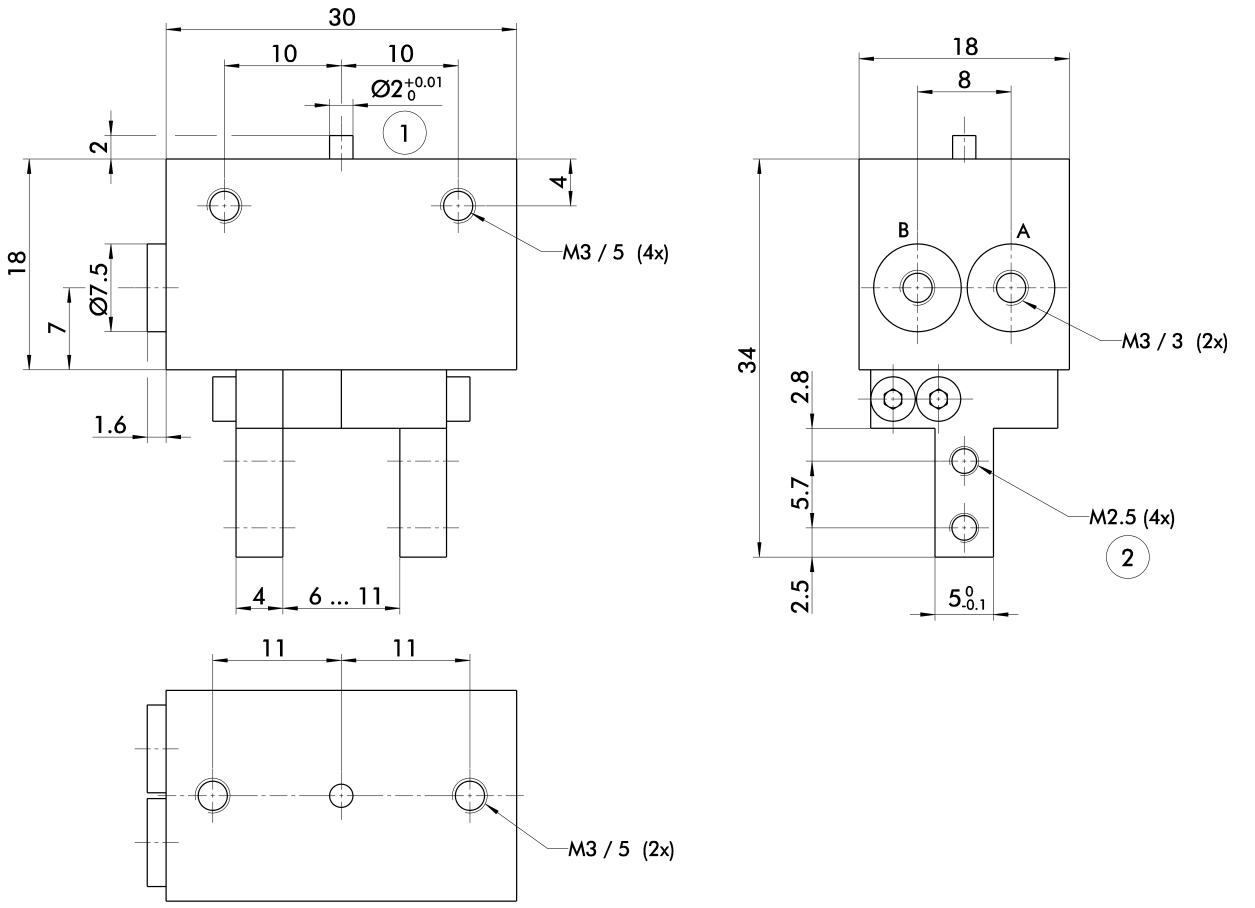


The drawing shows the gripper in the basic version with closed jaws, the dimensions do not include the options described below.

ⓘ The SDV-P pressure maintenance valve can be used as a gripping force maintenance device (see "Accessories" catalog section).

A, a Main/direct connection, gripper opening
B, b Main/direct connection, gripper closing

① Gripper connection
② Finger connection

## Micro-Photo Sensor

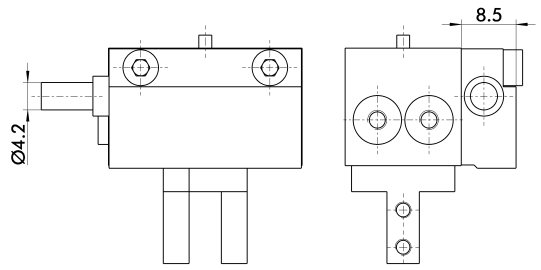


Grippers with an integrated photo sensor indicate two of three positions.
(O = open, T = gripped, C = closed)

## Amplifier

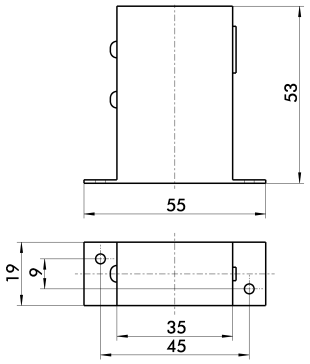


Dimensions of the amplifier for the photo sensor (FS). The amplifier is included in the scope of delivery of grippers in FS-version.

# RH 901K-ST10

**Pneumatic • 2-Finger Parallel Gripper • Gripper for small components**



## Sensor switching characteristics

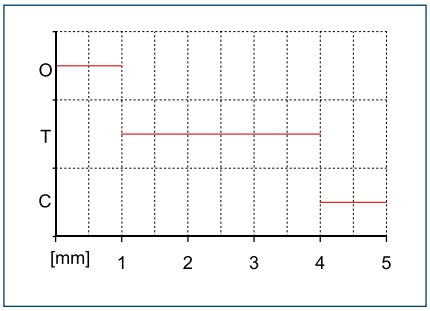


## Finger load

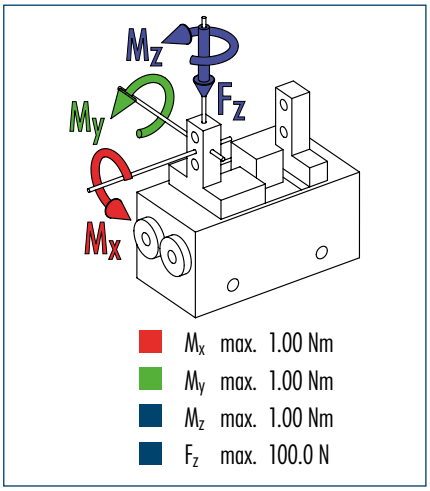


ⓘ The indicated moments and forces are static values, apply per base jaw and may occur simultaneously. $M_y$ may arise in addition to the moment generated by the gripping force itself. If the max. permitted finger weight is exceeded, it is imperative to throttle the air pressure so that the jaw movement occurs without any hitting or bouncing. Service life may be reduced.

## Technical data

| Description | | RH 901K-ST10 | RH 901K-ST10-FS OC 5 | RH 901K-ST10-FS OT 5 | RH 901K-ST10-FS TC 5 |
|---|---|---|---|---|---|
| **ID** | | **0360164** | **0360166** | **0360167** | **0360168** |
| Stroke per finger | [mm] | 5 | 5 | 5 | 5 |
| Closing force | [N] | 13 | 13 | 13 | 13 |
| Opening force | [N] | 13 | 13 | 13 | 13 |
| Weight | [kg] | 0.04 | 0.04 | 0.04 | 0.04 |
| Recommended workpiece weight | [kg] | 0.065 | 0.065 | 0.065 | 0.065 |
| Air consumption per double stroke | [cm³] | 1 | 1 | 1 | 1 |
| Min./max. operating pressure | [bar] | 2/7 | 2/7 | 2/7 | 2/7 |
| Nominal operating pressure | [bar] | 6 | 6 | 6 | 6 |
| Closing/opening time | [s] | 0.13/0.13 | 0.13/0.13 | 0.13/0.13 | 0.13/0.13 |
| Max. permitted finger length | [mm] | 35 | 35 | 35 | 35 |
| Max. permitted weight per finger | [kg] | 0.02 | 0.02 | 0.02 | 0.02 |
| IP class | | 30 | 30 | 30 | 30 |
| Min./max. ambient temperature | [°C] | 5/60 | 5/60 | 5/60 | 5/60 |
| Repeat accuracy | [mm] | 0.01 | 0.01 | 0.01 | 0.01 |

## Main view

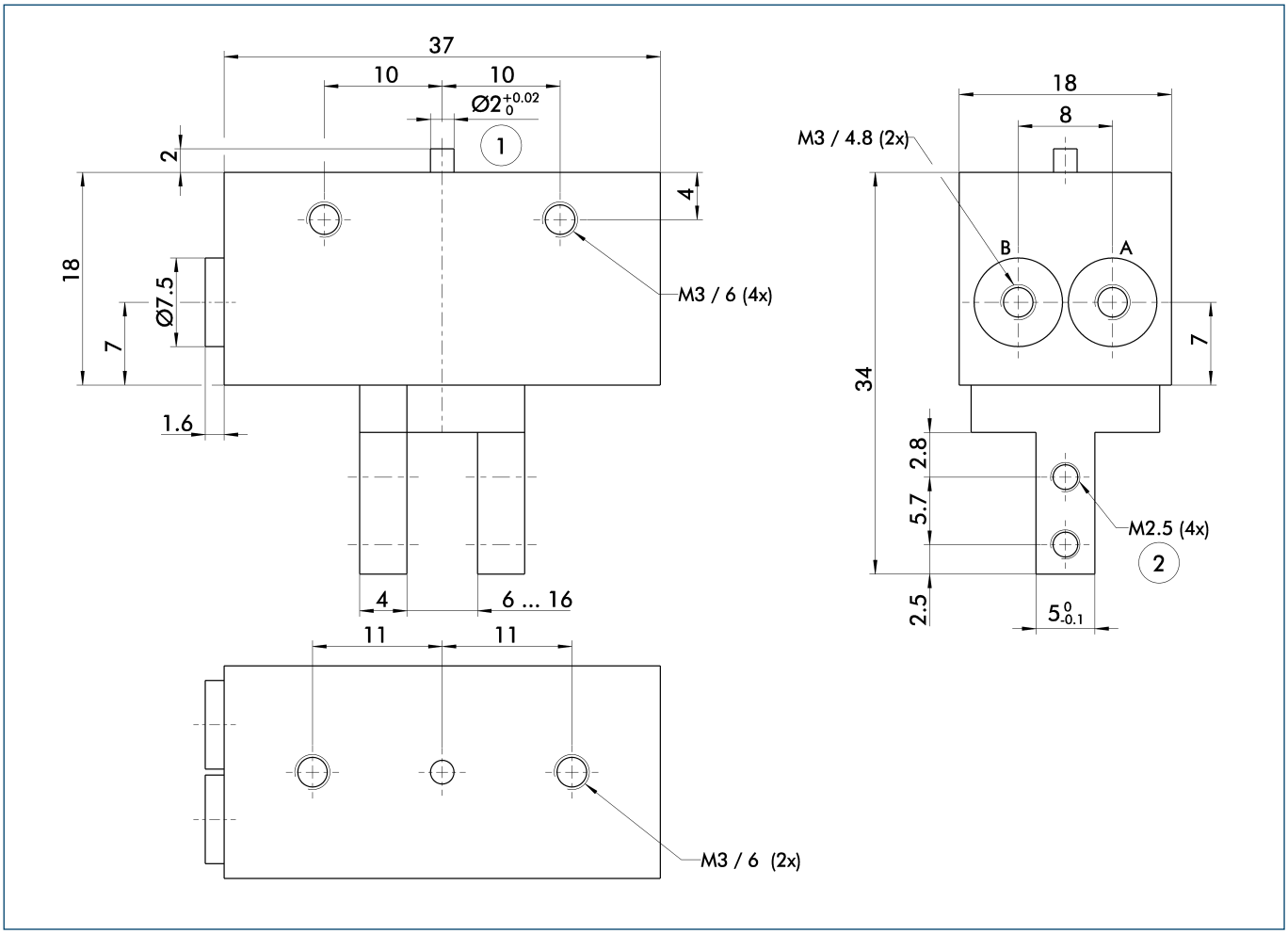


The drawing shows the gripper in the basic version with closed jaws, the dimensions do not include the options described below.

ⓘ The SDV-P pressure maintenance valve can be used as a gripping force maintenance device (see "Accessories" catalog section).

A, a Main/direct connection, gripper opening
B, b Main/direct connection, gripper closing

① Gripper connection
② Finger connection

## Micro-Photo Sensor

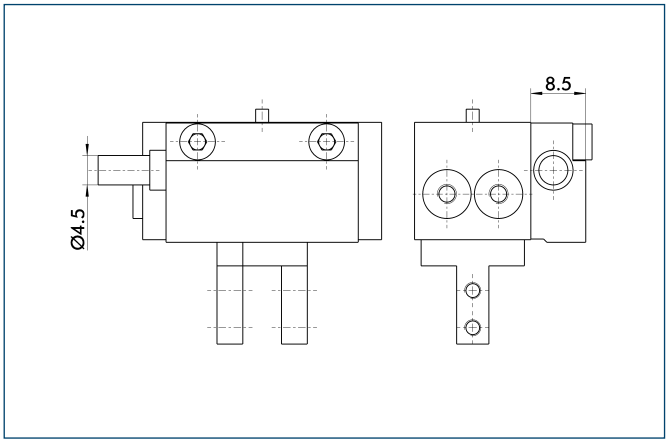


Grippers with an integrated photo sensor indicate two of three positions.
(O = open, T = gripped, C = closed)

## Amplifier

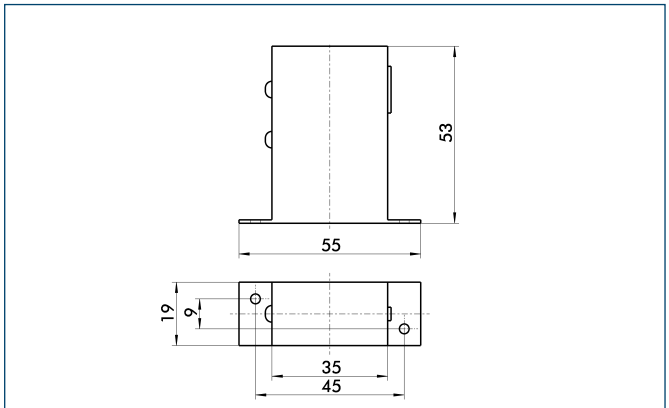


Dimensions of the amplifier for the photo sensor (FS). The amplifier is included in the scope of delivery of grippers in FS-version.

# RH 905

**Pneumatic • 2-Finger Parallel Gripper • Gripper for small components**




## Sensor switching characteristics

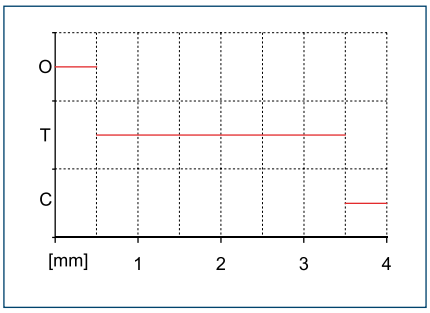


## Finger load

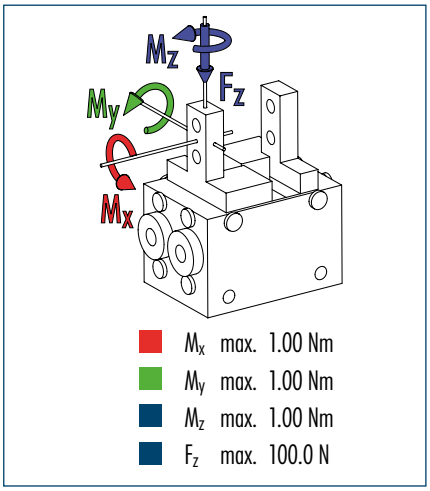


ⓘ The indicated moments and forces are static values, apply per base jaw and may occur simultaneously. $M_y$ may arise in addition to the moment generated by the gripping force itself. If the max. permitted finger weight is exceeded, it is imperative to throttle the air pressure so that the jaw movement occurs without any hitting or bouncing. Service life may be reduced.

## Technical data

| Description | | RH 905 | RH 905-FS TC 5 | RH 905-FS OC 5 | RH 905-FS OT 5 |
|---|---|---|---|---|---|
| **ID** | | **0360110** | **0360259** | **0360257** | **0360258** |
| Stroke per finger | [mm] | 4 | 4 | 4 | 4 |
| Closing force | [N] | 44 | 44 | 44 | 44 |
| Opening force | [N] | 44 | 44 | 44 | 44 |
| Weight | [kg] | 0.09 | 0.09 | 0.09 | 0.09 |
| Recommended workpiece weight | [kg] | 0.22 | 0.22 | 0.22 | 0.22 |
| Air consumption per double stroke | [cm³] | 1 | 1 | 1 | 1 |
| Min./max. operating pressure | [bar] | 2/7 | 2/7 | 2/7 | 2/7 |
| Nominal operating pressure | [bar] | 6 | 6 | 6 | 6 |
| Closing/opening time | [s] | 0.13/0.13 | 0.13/0.13 | 0.13/0.13 | 0.13/0.13 |
| Max. permitted finger length | [mm] | 35 | 35 | 35 | 35 |
| Max. permitted weight per finger | [kg] | 0.04 | 0.04 | 0.04 | 0.04 |
| IP class | | 30 | 30 | 30 | 30 |
| Min./max. ambient temperature | [°C] | 5/60 | 5/60 | 5/60 | 5/60 |
| Repeat accuracy | [mm] | 0.01 | 0.01 | 0.01 | 0.01 |

## Main view

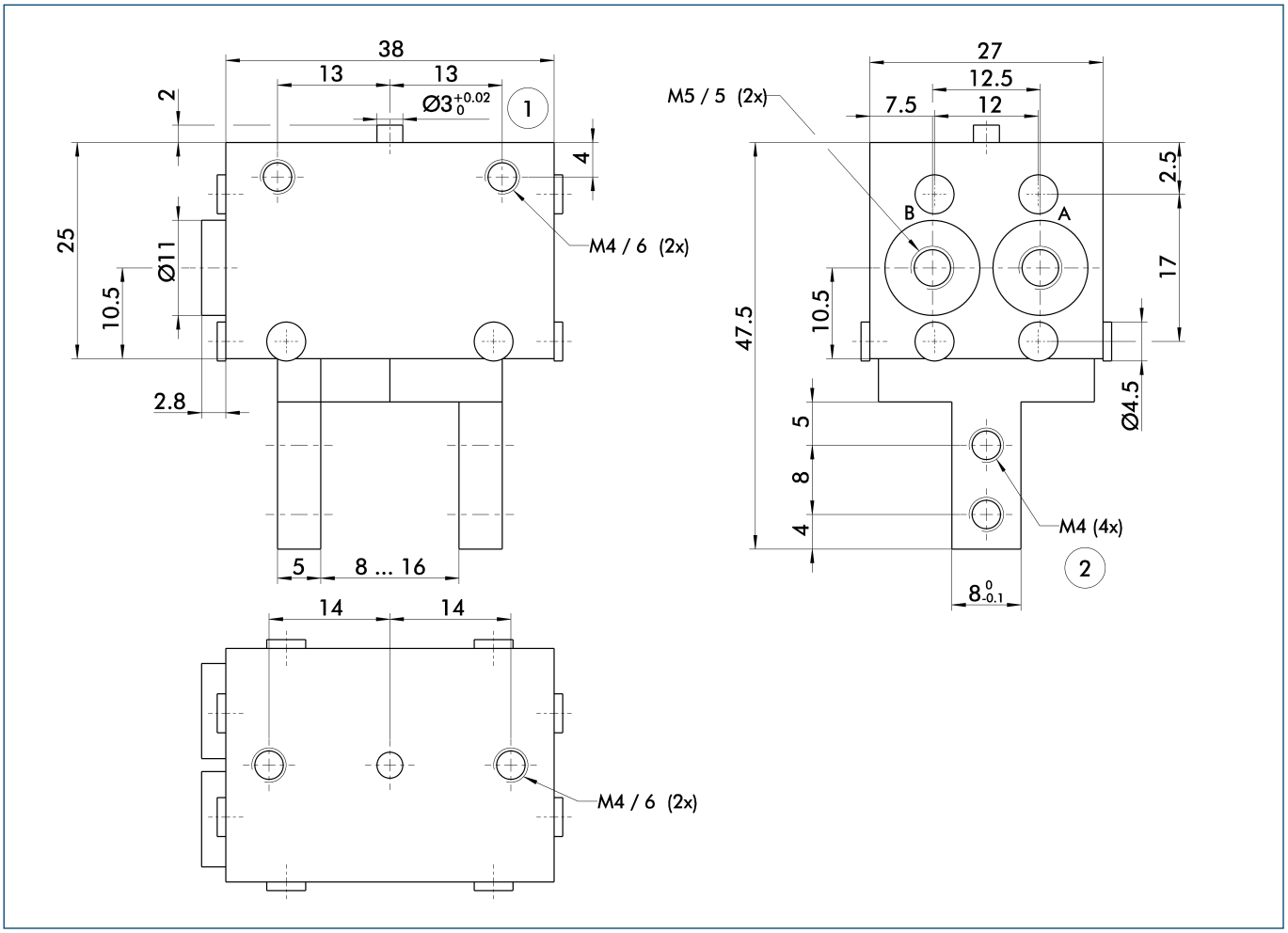


The drawing shows the gripper in the basic version with closed jaws, the dimensions do not include the options described below.

A, a Main/direct connection, gripper opening
B, b Main/direct connection, gripper closing

① Gripper connection
② Finger connection

ⓘ The SDV-P pressure maintenance valve can be used as a gripping force maintenance device (see "Accessories" catalog section).

## Micro-Photo Sensor

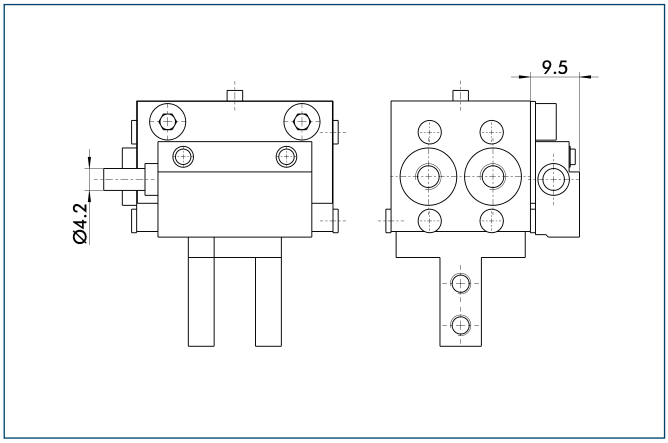


Grippers with an integrated photo sensor indicate two of three positions.
(O = open, T = gripped, C = closed)

## Amplifier

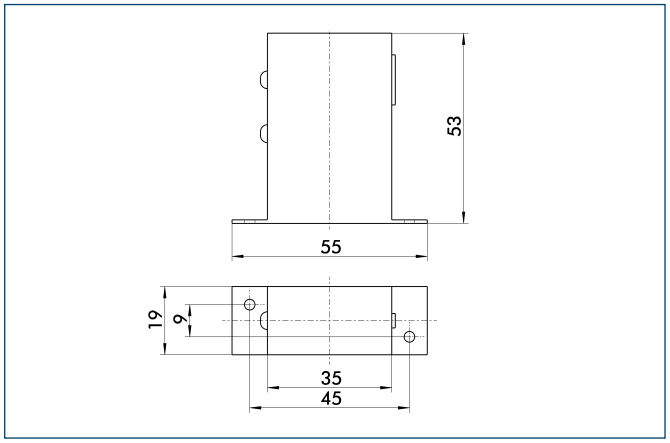


Dimensions of the amplifier for the photo sensor (FS). The amplifier is included in the scope of delivery of grippers in FS-version.

# RH 907






## Finger load

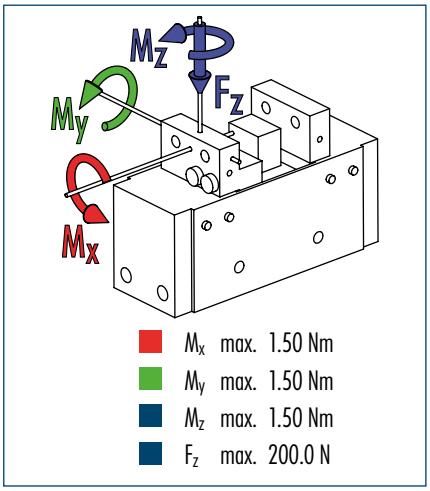


ⓘ The indicated moments and forces are static values, apply per base jaw and may occur simultaneously. $M_y$ may arise in addition to the moment generated by the gripping force itself. If the max. permitted finger weight is exceeded, it is imperative to throttle the air pressure so that the jaw movement occurs without any hitting or bouncing. Service life may be reduced.

## Technical data

| Description | | RH 907 |
|---|---|---|
| **ID** | | **0360200** |
| Stroke per finger | [mm] | 8 |
| Closing force | [N] | 80 |
| Opening force | [N] | 80 |
| Weight | [kg] | 0.17 |
| Recommended workpiece weight | [kg] | 0.4 |
| Air consumption per double stroke | [cm³] | 2 |
| Min./max. operating pressure | [bar] | 2/7 |
| Nominal operating pressure | [bar] | 6 |
| Closing/opening time | [s] | 0.17/0.17 |
| Max. permitted finger length | [mm] | 20 |
| Max. permitted weight per finger | [kg] | 0.05 |
| IP class | | 30 |
| Min./max. ambient temperature | [°C] | 5/60 |
| Repeat accuracy | [mm] | 0.01 |

## Main view

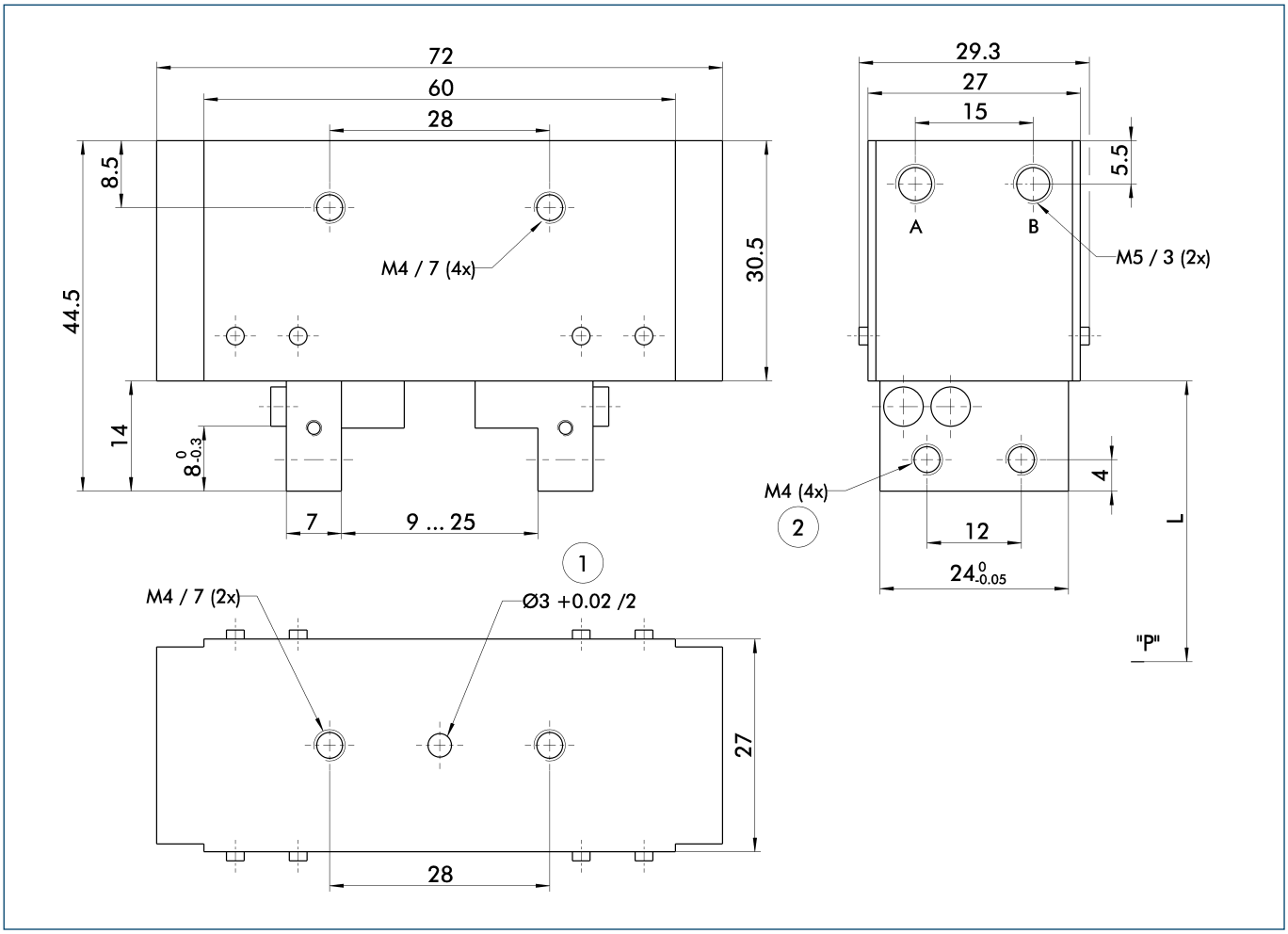


The drawing shows the gripper in the basic version with closed jaws, the dimensions do not include the options described below.

A, a Main/direct connection, gripper opening
B, b Main/direct connection, gripper closing

① Gripper connection
② Finger connection

ⓘ The SDV-P pressure maintenance valve can be used as a gripping force maintenance device (see “Accessories” catalog section).

## Mounting kit for proximity switch

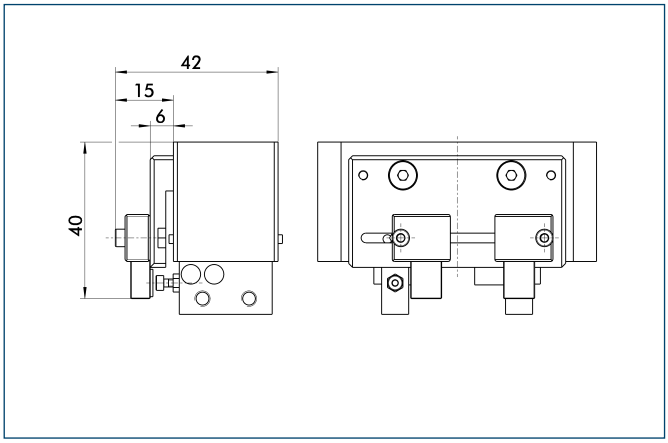


The mounting kit includes a bracket, switch cams and mounting screws. Proximity switches must be ordered separately.

| Description | ID |
|---|---|
| Mounting kit for proximity switch | |
| AS-RH 907 | **0360206** |

ⓘ This mounting kit needs to be ordered optionally as an accessory.

## Inductive proximity switches

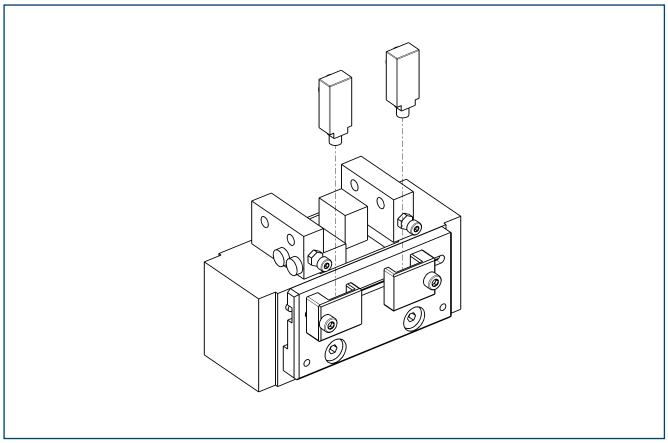

End position monitoring for direct mounting

| Description | ID | Recommended product |
|---|---|---|
| Mounting kit for proximity switch | | |
| AS-RH 907 | **0360206** | |
| Inductive proximity switches | | |
| IN 8-S-M8 | **0301481** | • |
| IN 8-S-M12 | **0301581** | |
| INK 8-S | **9700052** | |

ⓘ Two sensors (closer/NO) are required for each gripper, plus extension cables as an option.
ⓘ This mounting kit needs to be ordered optionally as an accessory.
ⓘ Please note the minimum permitted bending radii for the sensor cables, which are generally 35 mm.

You can find more detailed information and individual parts of the above-mentioned accessories in the “Accessories” catalog section.

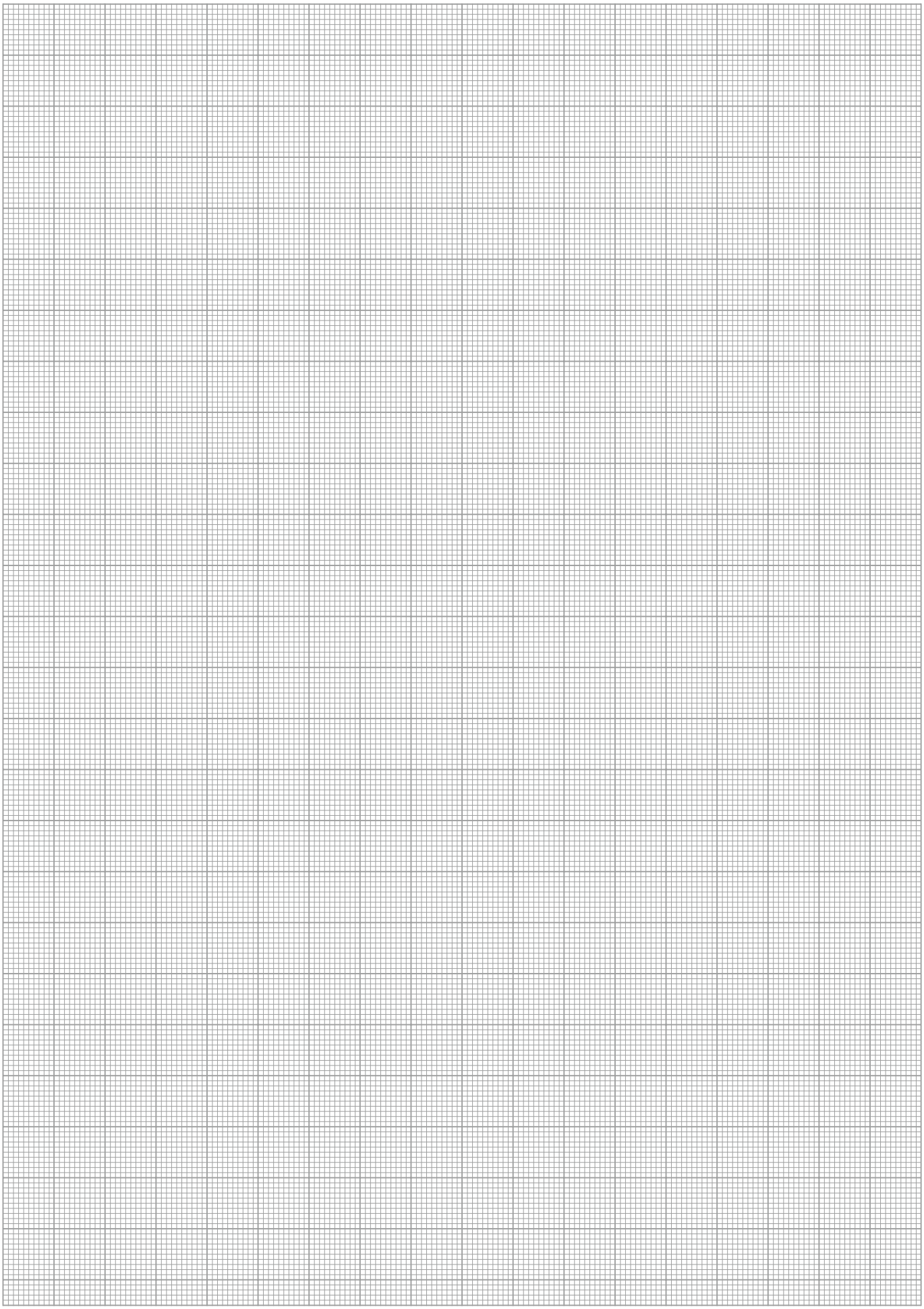

# RH 925

**Pneumatic • 2-Finger Parallel Gripper • Gripper for small components**




## Finger load

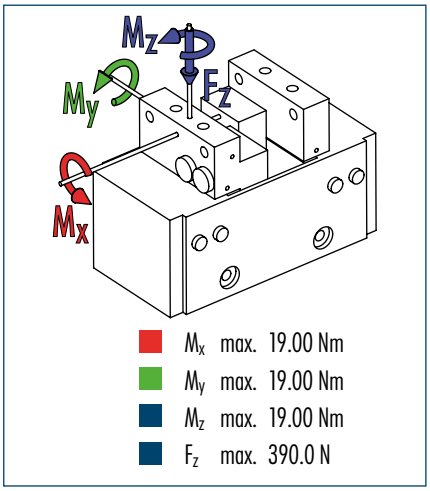


ⓘ The indicated moments and forces are static values, apply per base jaw and may occur simultaneously. $M_y$ may arise in addition to the moment generated by the gripping force itself. If the max. permitted finger weight is exceeded, it is imperative to throttle the air pressure so that the jaw movement occurs without any hitting or bouncing. Service life may be reduced.

## Technical data

| Description | | RH 925 | RH 925 PX |
|---|---|---|---|
| ID | | 0360300 | 0360301 |
| Stroke per finger | [mm] | 12 | 12 |
| Closing force | [N] | 270 | 270 |
| Opening force | [N] | 270 | 270 |
| Weight | [kg] | 0.55 | 0.55 |
| Recommended workpiece weight | [kg] | 1.3 | 1.3 |
| Air consumption per double stroke | [cm³] | 8 | 8 |
| Min./max. operating pressure | [bar] | 2/7 | 2/7 |
| Nominal operating pressure | [bar] | 6 | 6 |
| Closing/opening time | [s] | 0.5/0.5 | 0.5/0.5 |
| Max. permitted finger length | [mm] | 30 | 30 |
| Max. permitted weight per finger | [kg] | 0.08 | 0.08 |
| IP class | | 30 | 30 |
| Min./max. ambient temperature | [°C] | 5/60 | 5/60 |
| Repeat accuracy | [mm] | 0.02 | 0.02 |

## Main view

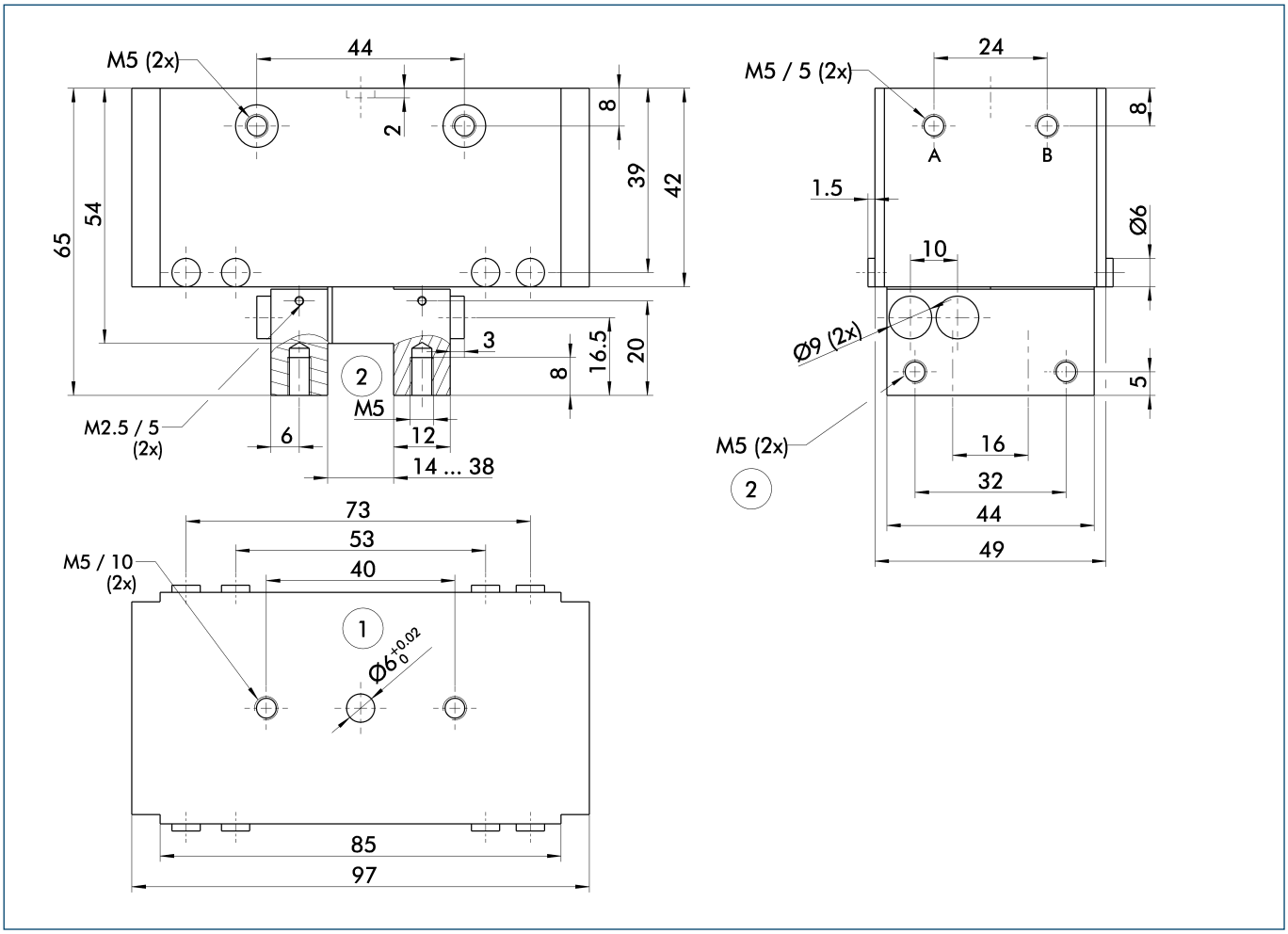


The drawing shows the gripper in the basic version with closed jaws, the dimensions do not include the options described below.

A, a Main/direct connection, gripper opening
B, b Main/direct connection, gripper closing

① Gripper connection
② Finger connection

ⓘ The SDV-P pressure maintenance valve can be used as a gripping force maintenance device (see "Accessories" catalog section).

## Attachment to the proximity switch

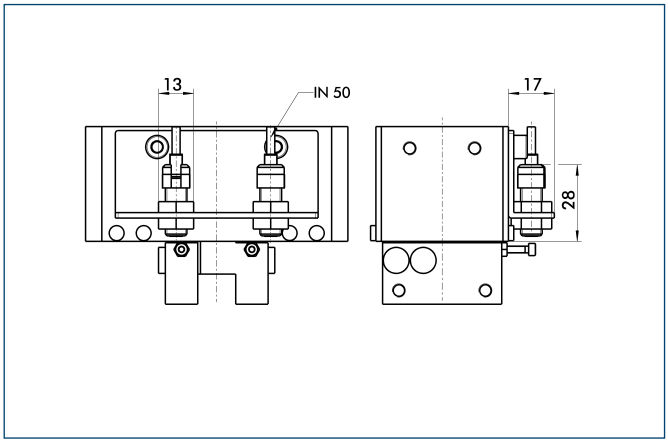


For PX-versions, the mounting kit for attachment is delivered with the proximity switch.

## Inductive proximity switches

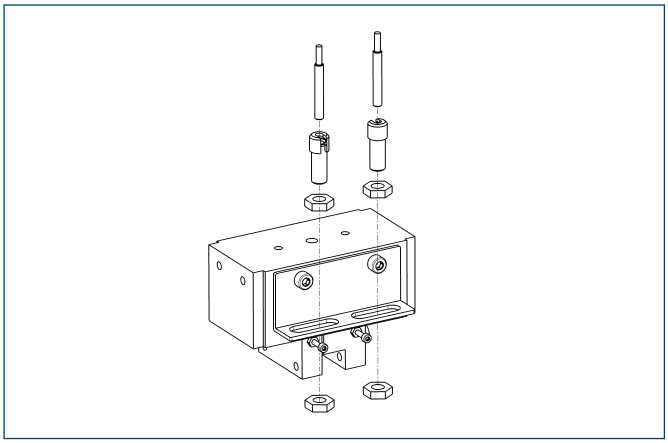

End position monitoring for direct mounting

| Description | ID | Recommended product |
|---|---|---|
| Inductive proximity switches | | |
| IN 50-S-M12 | **0301575** | • |
| INK 50-S | **0301560** | |
| Connection cables | | |
| KA BG12-L 3P-0500-PNP | **30016369** | |
| KA BW12-L 3P-0300-PNP | **0301503** | |
| KA BW12-L 3P-0500-PNP | **0301507** | |
| Cable extensions | | |
| KV BG12-SG12 3P-0030-PNP | **0301999** | |
| KV BG12-SG12 3P-0060-PNP | **0301998** | |
| KV BW12-SG12 3P-0030-PNP | **0301595** | |
| KV BW12-SG12 3P-0100-PNP | **0301596** | |
| KV BW12-SG12 3P-0200-PNP | **0301597** | |

ⓘ Two sensors (closer/NO) are required for each gripper, plus extension cables as an option.

ⓘ Please note the minimum permitted bending radii for the sensor cables, which are generally 35 mm.

You can find more detailed information and individual parts of the above-mentioned accessories in the “Accessories” catalog section.

# RH 940

**Pneumatic • 2-Finger Parallel Gripper • Gripper for small components**




## Finger load

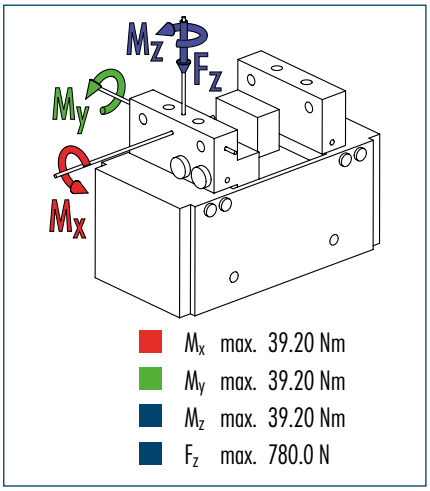


ⓘ The indicated moments and forces are static values, apply per base jaw and may occur simultaneously. $M_y$ may arise in addition to the moment generated by the gripping force itself. If the max. permitted finger weight is exceeded, it is imperative to throttle the air pressure so that the jaw movement occurs without any hitting or bouncing. Service life may be reduced.

## Technical data

| Description | | RH 940 | RH 940 PX |
|---|---|---|---|
| ID | | 0360310 | 0360311 |
| Stroke per finger | [mm] | 15 | 15 |
| Closing force | [N] | 460 | 460 |
| Opening force | [N] | 460 | 460 |
| Weight | [kg] | 1.1 | 1.1 |
| Recommended workpiece weight | [kg] | 2.3 | 2.3 |
| Air consumption per double stroke | [cm³] | 14 | 14 |
| Min./max. operating pressure | [bar] | 2/7 | 2/7 |
| Nominal operating pressure | [bar] | 6 | 6 |
| Closing/opening time | [s] | 0.5/0.5 | 0.5/0.5 |
| Max. permitted finger length | [mm] | 50 | 50 |
| Max. permitted weight per finger | [kg] | 0.13 | 0.13 |
| IP class | | 30 | 30 |
| Min./max. ambient temperature | [°C] | 5/60 | 5/60 |
| Repeat accuracy | [mm] | 0.02 | 0.02 |

## Main view

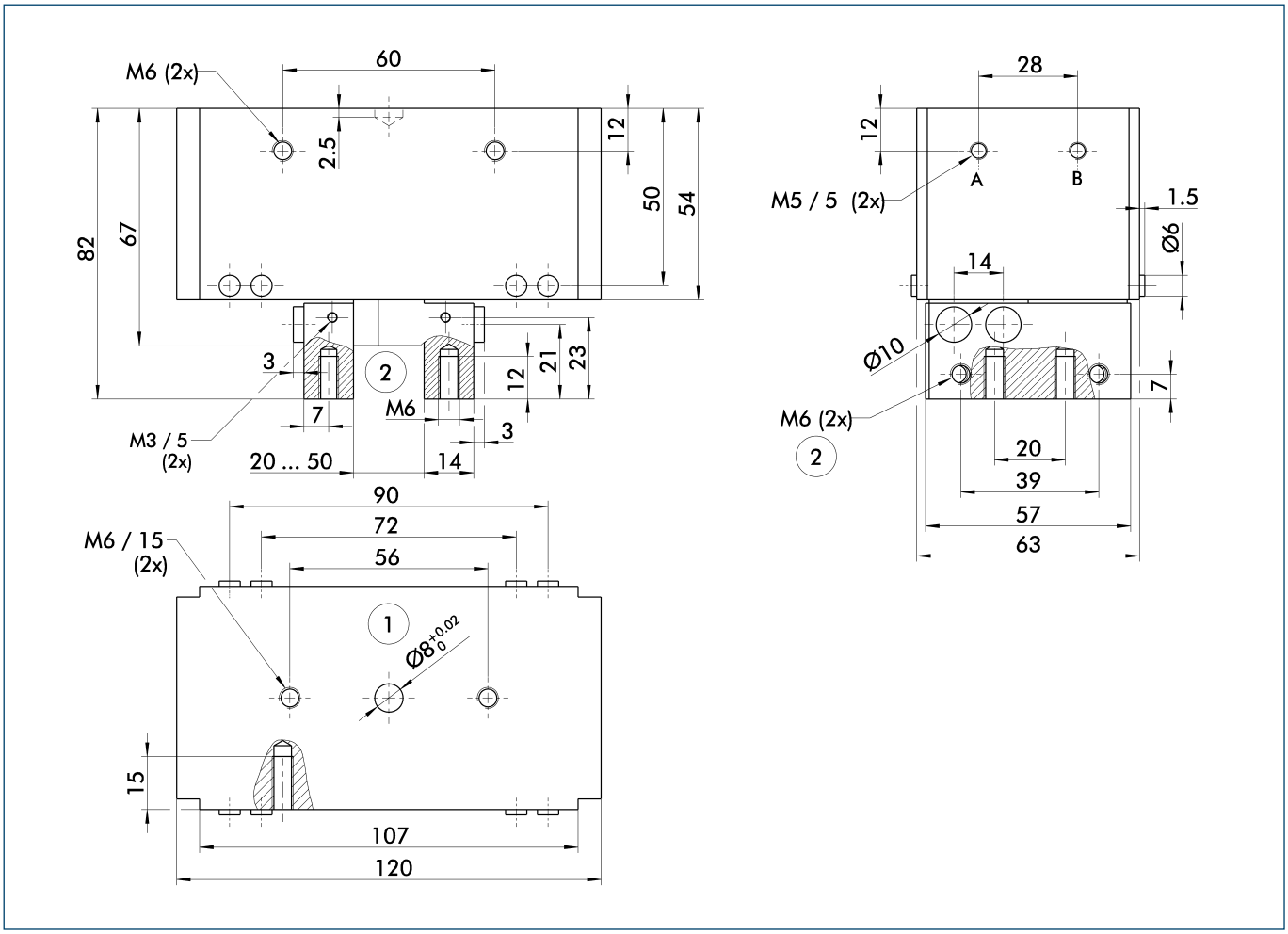


The drawing shows the gripper in the basic version with closed jaws, the dimensions do not include the options described below.

ⓘ The SDV-P pressure maintenance valve can be used as a gripping force maintenance device (see "Accessories" catalog section).

A, a Main/direct connection, gripper opening
B, b Main/direct connection, gripper closing

① Gripper connection
② Finger connection

## Attachment to the proximity switch

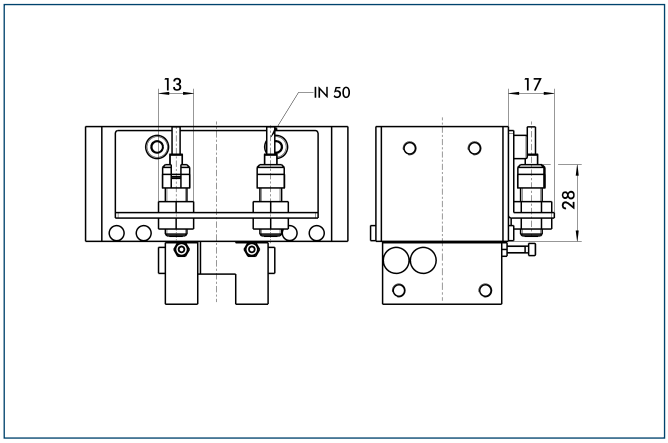


For PX-versions, the mounting kit for attachment is delivered with the proximity switch.

## Inductive proximity switches

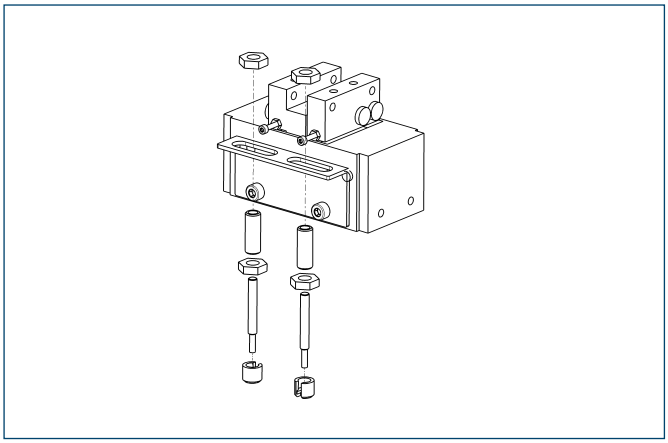

End position monitoring for direct mounting

| Description | ID | Recommended product |
|---|---|---|
| Inductive proximity switches | | |
| IN 50-S-M12 | **0301575** | • |
| INK 50-S | **0301560** | |
| Connection cables | | |
| KA BG12-L 3P-0500-PNP | **30016369** | |
| KA BW12-L 3P-0300-PNP | **0301503** | |
| KA BW12-L 3P-0500-PNP | **0301507** | |
| Cable extensions | | |
| KV BG12-SG12 3P-0030-PNP | **0301999** | |
| KV BG12-SG12 3P-0060-PNP | **0301998** | |
| KV BW12-SG12 3P-0030-PNP | **0301595** | |
| KV BW12-SG12 3P-0100-PNP | **0301596** | |
| KV BW12-SG12 3P-0200-PNP | **0301597** | |

ⓘ Two sensors (closer/NO) are required for each gripper, plus extension cables as an option.

ⓘ Please note the minimum permitted bending radii for the sensor cables, which are generally 35 mm.

You can find more detailed information and individual parts of the above-mentioned accessories in the “Accessories” catalog section.

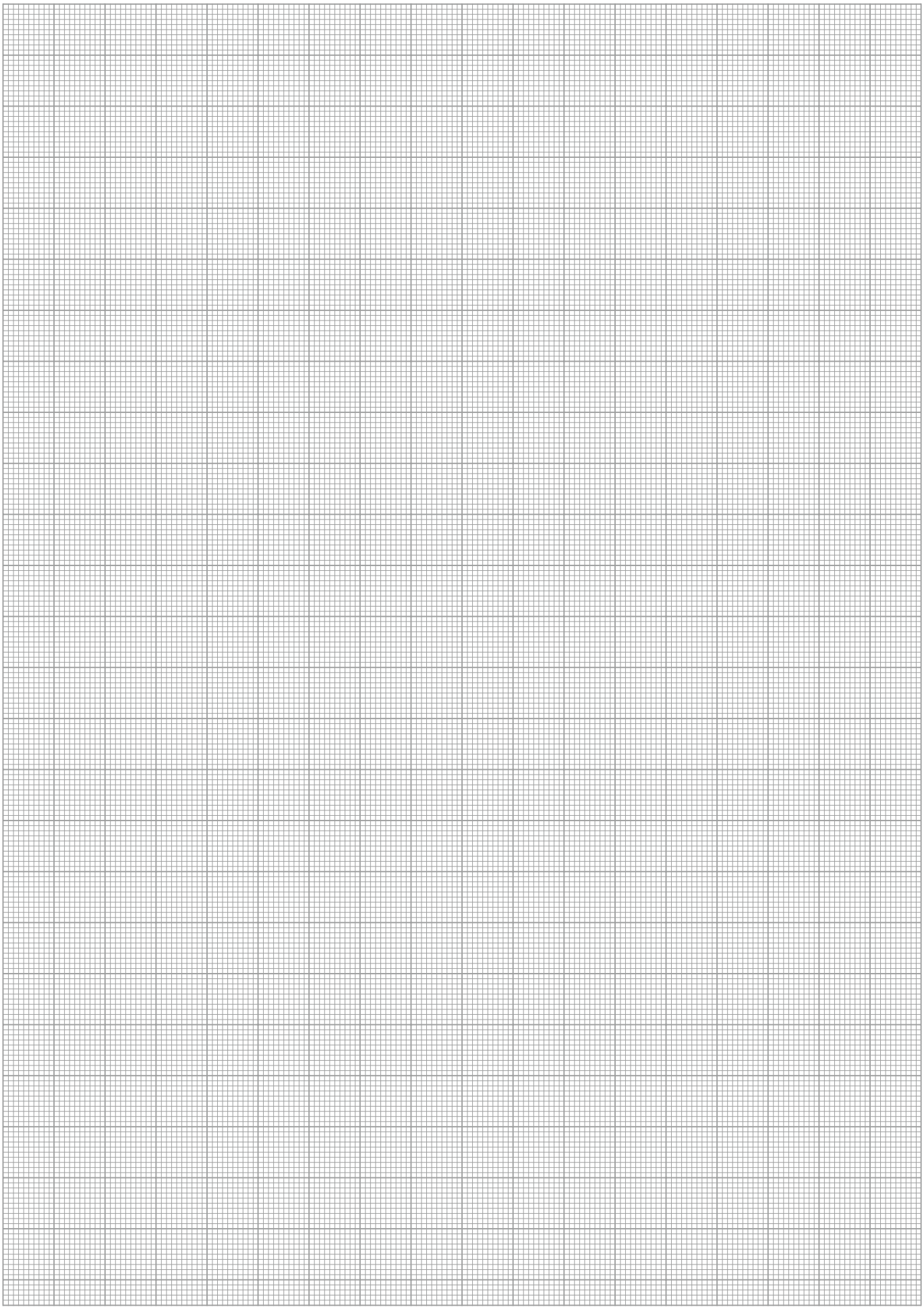

# RH 9010

**Pneumatic • 2-Finger Parallel Gripper • Gripper for small components**




## Finger load

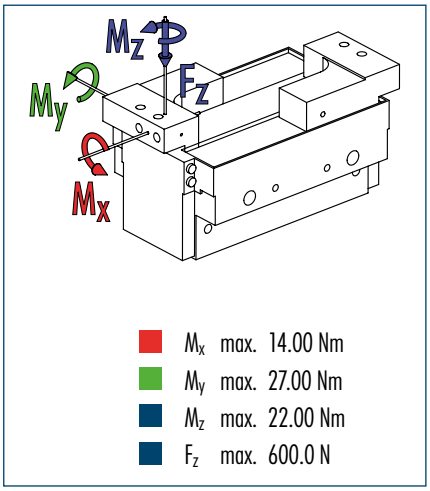


ⓘ The indicated moments and forces are static values, apply per base jaw and may occur simultaneously. $M_y$ may arise in addition to the moment generated by the gripping force itself. If the max. permitted finger weight is exceeded, it is imperative to throttle the air pressure so that the jaw movement occurs without any hitting or bouncing. Service life may be reduced.

## Technical data

| Description | | RH 9010 |
|---|---|---|
| **ID** | | **0360141** |
| Stroke per finger | [mm] | 40 |
| Closing force | [N] | 150 |
| Opening force | [N] | 150 |
| Weight | [kg] | 0.89 |
| Recommended workpiece weight | [kg] | 0.75 |
| Air consumption per double stroke | [cm³] | 8 |
| Min./max. operating pressure | [bar] | 2/7 |
| Nominal operating pressure | [bar] | 6 |
| Closing/opening time | [s] | 0.5/0.5 |
| Max. permitted finger length | [mm] | 100 |
| Max. permitted weight per finger | [kg] | 0.15 |
| IP class | | 30 |
| Min./max. ambient temperature | [°C] | 5/60 |
| Repeat accuracy | [mm] | 0.02 |

## Main view

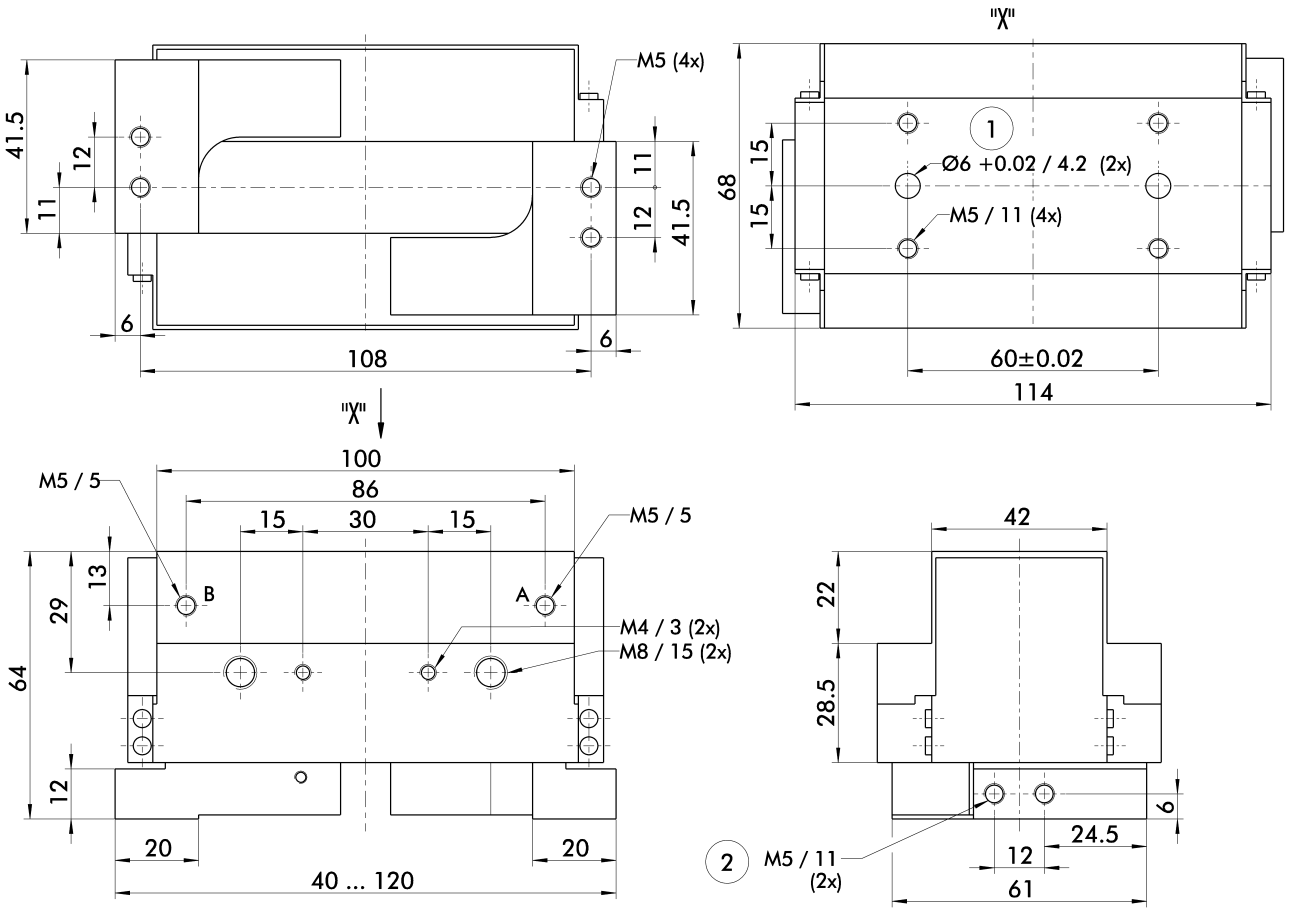


The drawing shows the gripper in the basic version with closed jaws, the dimensions do not include the options described below.

A, a Main/direct connection, gripper opening
B, b Main/direct connection, gripper closing

① Gripper connection
② Finger connection

ⓘ The SDV-P pressure maintenance valve can be used as a gripping force maintenance device (see "Accessories" catalog section).

## Mounting kit for proximity switch

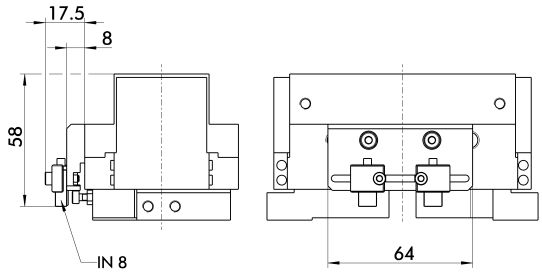


The mounting kit includes a bracket, switch cams and mounting screws. Proximity switches must be ordered separately.

| Description | ID |
|---|---|
| Mounting kit for proximity switch | |
| AS-RH 9010 | **0360207** |

ⓘ This mounting kit needs to be ordered optionally as an accessory.

## Inductive proximity switches

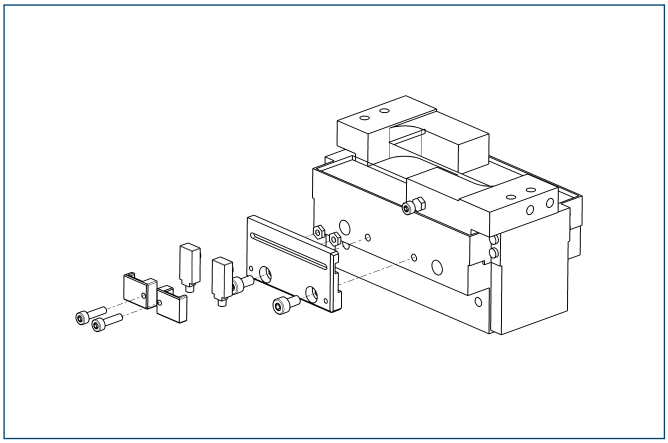

End position monitoring mounted with mounting kit

| Description | ID | Recommended product |
|---|---|---|
| Mounting kit for proximity switch | | |
| AS-RH 9010 | **0360207** | |
| Inductive proximity switches | | |
| IN 8-S-M8 | **0301481** | • |
| IN 8-S-M12 | **0301581** | |
| INK 8-S | **9700052** | |

ⓘ Two sensors (closer/NO) are required for each gripper, plus extension cables as an option.
ⓘ This mounting kit needs to be ordered optionally as an accessory.
ⓘ Please note the minimum permitted bending radii for the sensor cables, which are generally 35 mm.

You can find more detailed information and individual parts of the above-mentioned accessories in the “Accessories” catalog section.

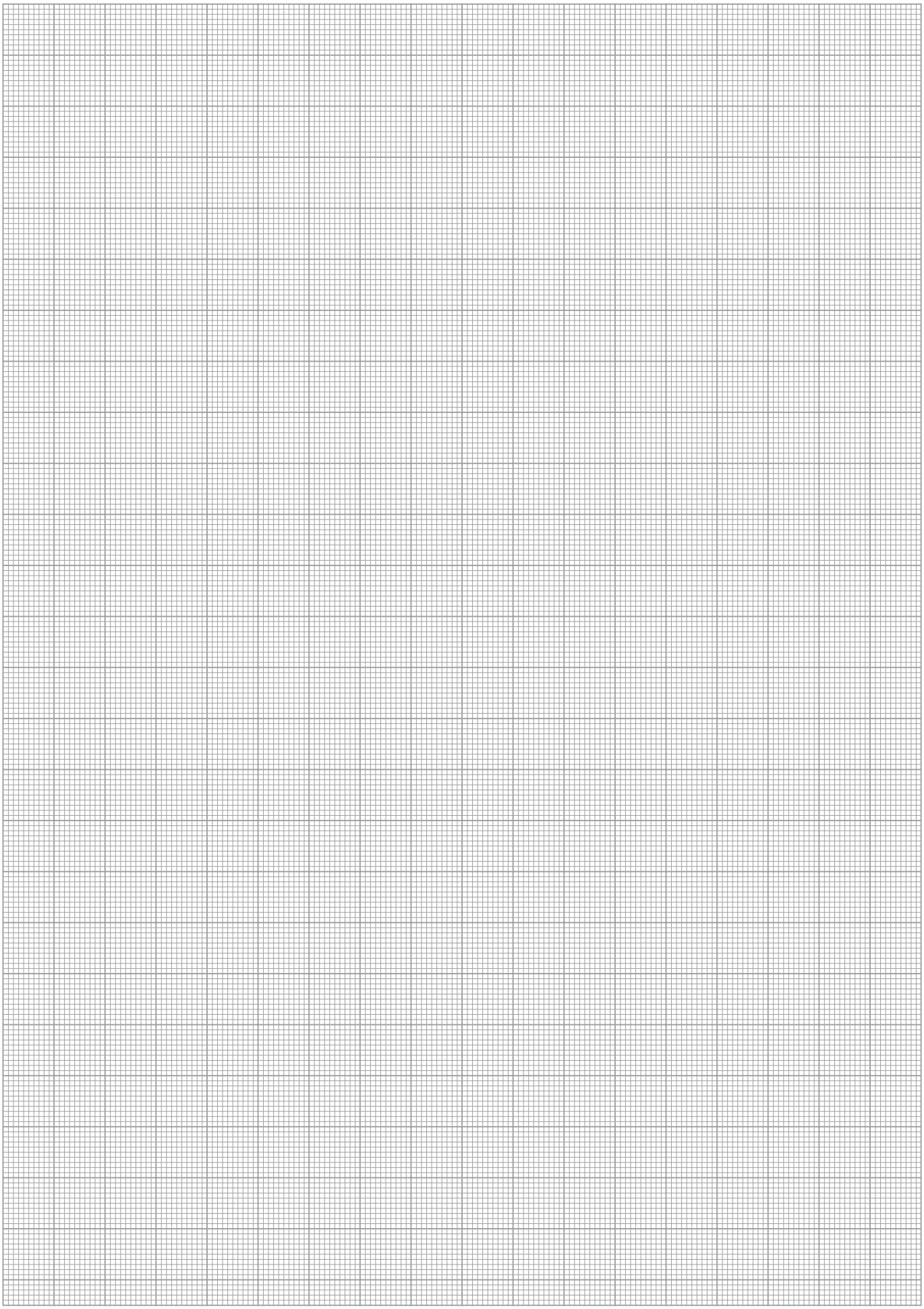

# RH 918

**Pneumatic • 2-Finger Parallel Gripper • Gripper for small components**

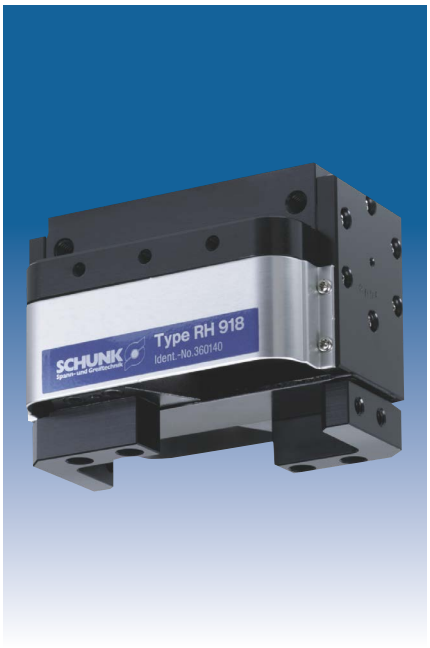


## Finger load

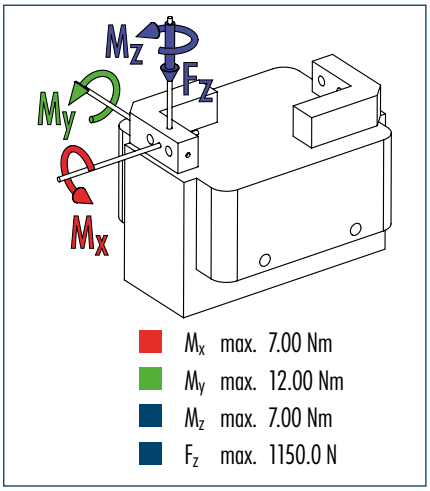


ⓘ The indicated moments and forces are static values, apply per base jaw and may occur simultaneously. $M_y$ may arise in addition to the moment generated by the gripping force itself. If the max. permitted finger weight is exceeded, it is imperative to throttle the air pressure so that the jaw movement occurs without any hitting or bouncing. Service life may be reduced.

## Technical data

| Description | | RH 918 | RH 918-POD |
|---|---|---|---|
| ID | | 0360140 | 0360142 |
| Stroke per finger | [mm] | 30 | 30 |
| Closing force | [N] | 100 | 100 |
| Opening force | [N] | 100 | 100 |
| Weight | [kg] | 0.48 | 0.6 |
| Recommended workpiece weight | [kg] | 0.5 | 0.5 |
| Air consumption per double stroke | [cm³] | 16 | 16 |
| Min./max. operating pressure | [bar] | 2/7 | 2/7 |
| Nominal operating pressure | [bar] | 6 | 6 |
| Closing/opening time | [s] | 0.4/0.4 | 0.4/0.4 |
| Max. permitted finger length | [mm] | 65 | 65 |
| Max. permitted weight per finger | [kg] | 0.12 | 0.12 |
| IP class | | 30 | 30 |
| Min./max. ambient temperature | [°C] | 5/60 | 5/60 |
| Repeat accuracy | [mm] | 0.02 | 0.02 |

## Main view

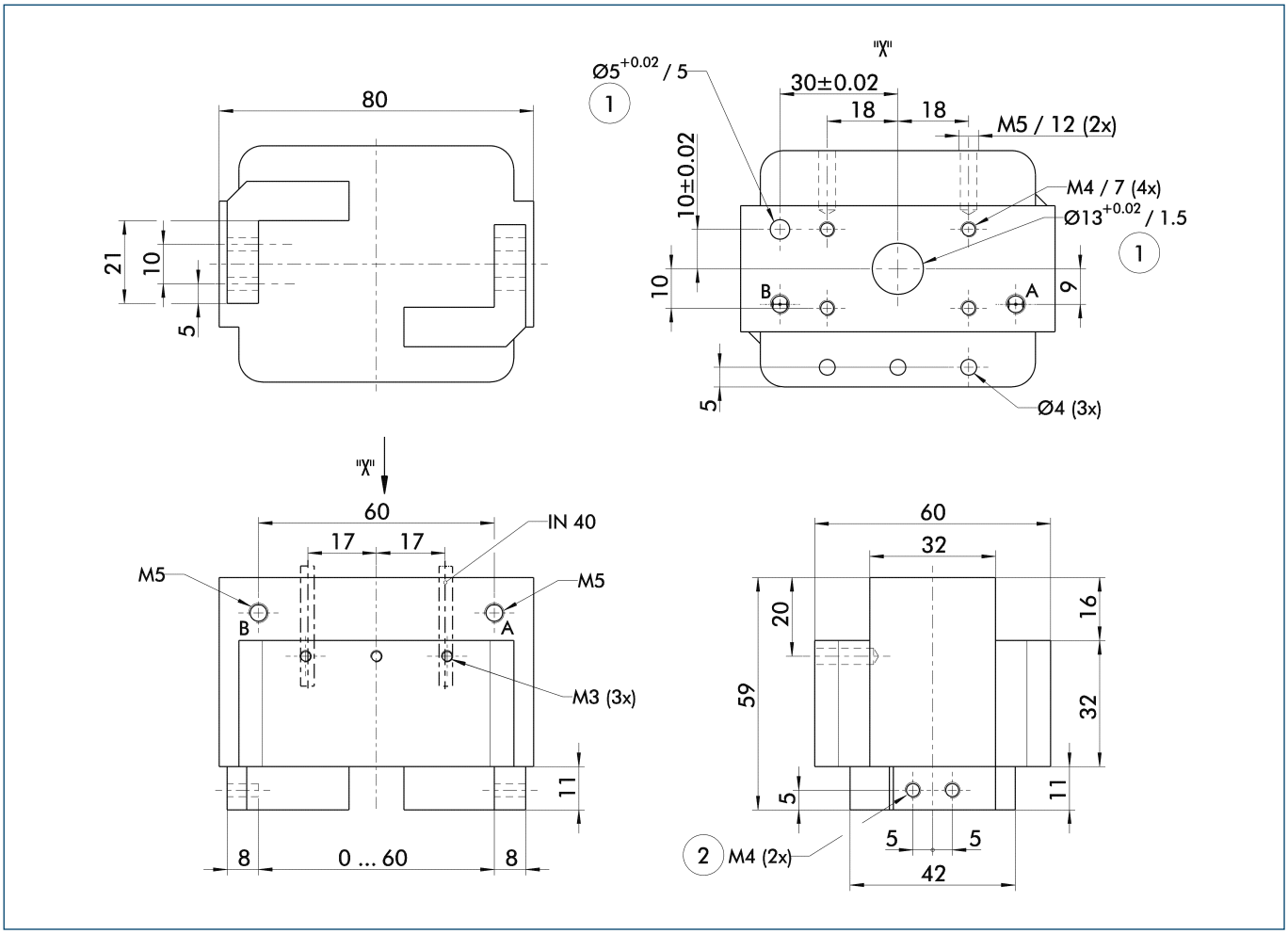


The drawing shows the gripper in the basic version with closed jaws, the dimensions do not include the options described below.

A, a Main/direct connection, gripper opening
B, b Main/direct connection, gripper closing

① Gripper connection
② Finger connection

ⓘ The SDV-P pressure maintenance valve can be used as a gripping force maintenance device (see "Accessories" catalog section).

## Mounting kit for FPS

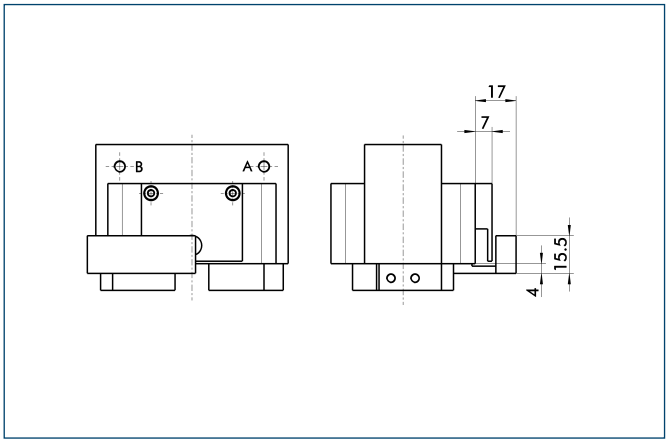


The FPS flexible position sensor can distinguish between five freely programmable ranges or switching points for the stroke of a gripper and can be used in conjunction with a PC as a measuring system.

| Description | ID |
|---|---|
| Mounting kit for FPS | |
| AS-RH 918 | 0301718 |

## Inductive proximity switches

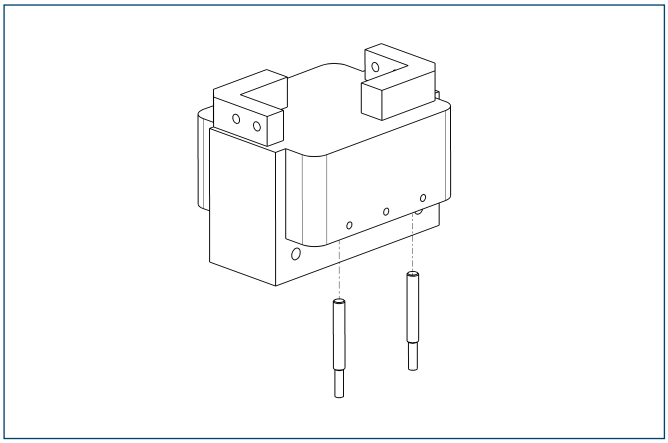

End position monitoring for direct mounting

| Description | ID | Recommended product |
|---|---|---|
| Inductive proximity switches | | |
| IN 40-S-M8 | **0301474** | • |
| IN 40-S-M12 | **0301574** | |
| INK 40-S | **0301555** | |
| IN 40-S-M5-PNP | **0301491** | |
| IN 40-S-M5-NPN | **0301492** | |
| Inductive proximity switch with lateral outlet | | |
| IN 40-S-M12-SA | **0301577** | |
| IN 40-S-M8-SA | **0301473** | • |
| INK 40-S-SA | **0301565** | |
| Connection cables | | |
| KA BG05-L 3P-0300 | **0301652** | |
| KA BG08-L 3P-0300-PNP | **0301622** | |
| KA BG08-L 3P-0500-PNP | **0301623** | |
| KA BG12-L 3P-0500-PNP | **30016369** | |
| KA BW05-L 3P-0300 | **0301650** | |
| KA BW08-L 3P-0300-PNP | **0301594** | |
| KA BW08-L 3P-0500-PNP | **0301502** | |
| KA BW12-L 3P-0300-PNP | **0301503** | |
| KA BW12-L 3P-0500-PNP | **0301507** | |
| Cable extensions | | |
| KV BG12-SG12 3P-0030-PNP | **0301999** | |
| KV BG12-SG12 3P-0060-PNP | **0301998** | |
| KV BW08-SG08 3P-0030-PNP | **0301495** | |
| KV BW08-SG08 3P-0100-PNP | **0301496** | |
| KV BW08-SG08 3P-0200-PNP | **0301497** | |
| KV BW12-SG12 3P-0030-PNP | **0301595** | |
| KV BW12-SG12 3P-0100-PNP | **0301596** | |
| KV BW12-SG12 3P-0200-PNP | **0301597** | |

ⓘ Two sensors (closer/NO) are required for each gripper, plus extension cables as an option.

ⓘ Please note the minimum permitted bending radii for the sensor cables, which are generally 35 mm.

## Flexible Position Sensor

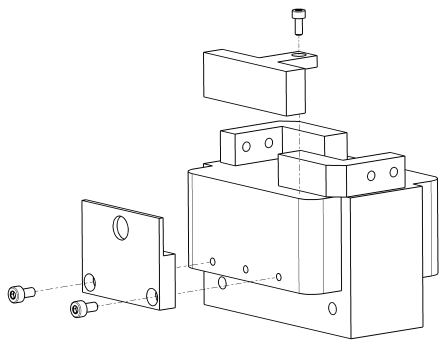

Flexible position monitoring of up to five positions

| Description | ID |
|---|---|
| Mounting kit for FPS | |
| AS-RH 918 | **0301718** |
| Electronic Processor | |
| FPS-F5 | **0301805** |
| FPS-F5 T | **0301807** |
| Sensor | |
| FPS-S 13 | **0301705** |

ⓘ When using a FPS system, a FPS sensor (FPS-S) and a control unit (FPS-F5 / F5 T or A5) are required for each gripper as well as a mounting kit (AS), if listed. Cable extensions (KV) are available as options in the “Accessories” catalog section.

You can find more detailed information and individual parts of the above-mentioned accessories in the “Accessories” catalog section.

# RH 806 KP

**Pneumatic • 2-Finger Parallel Gripper • Gripper for small components**




## Sensor switching characteristics

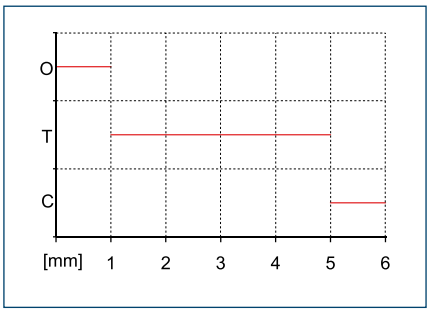


## Finger load

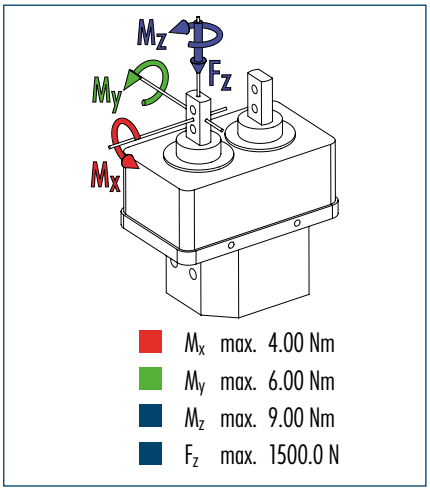


ⓘ The indicated moments and forces are static values, apply per base jaw and may occur simultaneously. $M_y$ may arise in addition to the moment generated by the gripping force itself. If the max. permitted finger weight is exceeded, it is imperative to throttle the air pressure so that the jaw movement occurs without any hitting or bouncing. Service life may be reduced.

## Technical data

| Description | | RH 806 KP | RH 806 KP PX OT5 | RH 806 KP PX OC5 | RH 806 KP PX TC5 |
|---|---|---|---|---|---|
| **ID** | | **0360178** | **0360179** | **0360180** | **0360181** |
| Stroke per finger | [mm] | 6 | 6 | 6 | 6 |
| Closing force | [N] | 65 | 65 | 65 | 65 |
| Opening force | [N] | 65 | 65 | 65 | 65 |
| Weight | [kg] | 0.36 | 0.36 | 0.36 | 0.36 |
| Recommended workpiece weight | [kg] | 0.325 | 0.325 | 0.325 | 0.325 |
| Air consumption per double stroke | [cm³] | 10 | 10 | 10 | 10 |
| Min./max. operating pressure | [bar] | 2/7 | 2/7 | 2/7 | 2/7 |
| Nominal operating pressure | [bar] | 6 | 6 | 6 | 6 |
| Closing/opening time | [s] | 0.13/0.1 | 0.13/0.1 | 0.13/0.1 | 0.13/0.1 |
| Max. permitted finger length | [mm] | 50 | 50 | 50 | 50 |
| Max. permitted weight per finger | [kg] | 0.07 | 0.07 | 0.07 | 0.07 |
| IP class | | 30 | 30 | 30 | 30 |
| Min./max. ambient temperature | [°C] | 5/60 | 5/60 | 5/60 | 5/60 |
| Repeat accuracy | [mm] | 0.02 | 0.02 | 0.02 | 0.02 |

## Main view

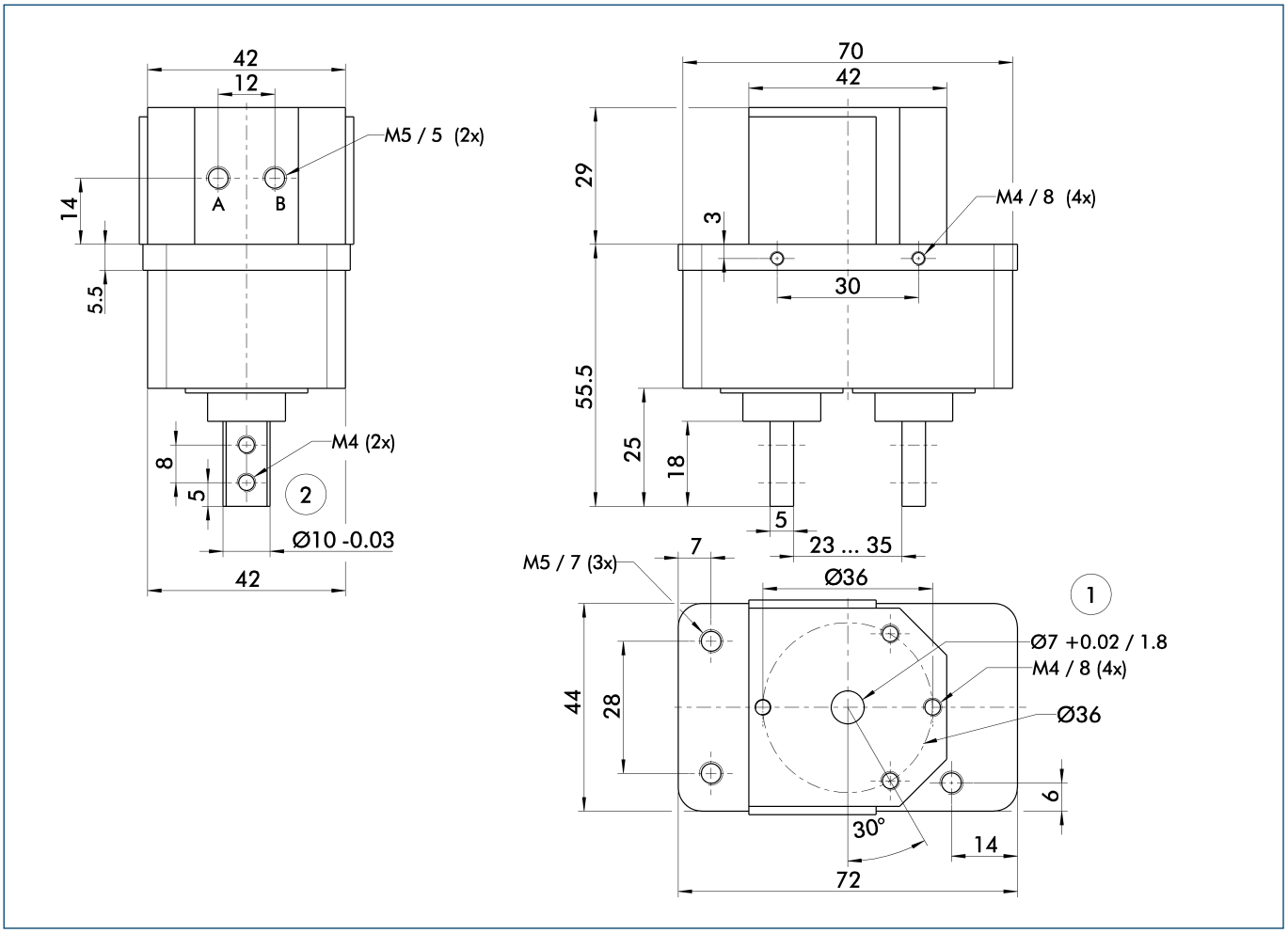


The drawing shows the gripper in the basic version with closed jaws, the dimensions do not include the options described below.

A, a Main/direct connection, gripper opening
B, b Main/direct connection, gripper closing

① Gripper connection
② Finger connection

ⓘ The SDV-P pressure maintenance valve can be used as a gripping force maintenance device (see "Accessories" catalog section).

## Attachment to the proximity switch

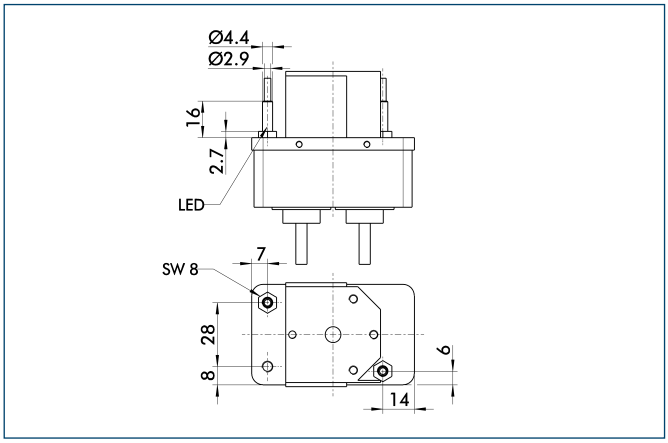


For PX-versions, the scope of delivery comprises the sensor and installation material.

# RH 801 KP

**Pneumatic • 2-Finger Parallel Gripper • Gripper for small components**



## Sensor switching characteristics

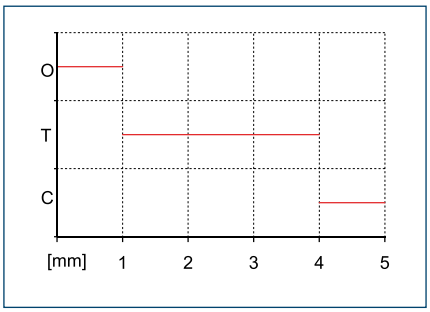


## Finger load

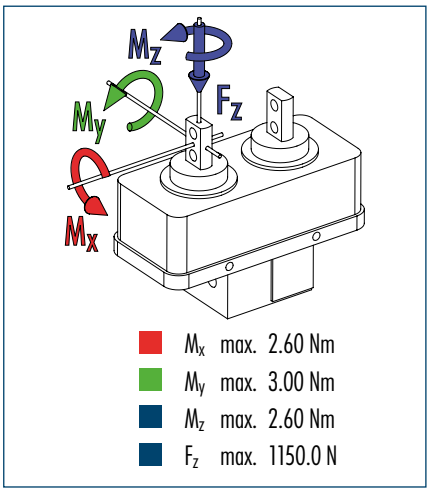


ⓘ The indicated moments and forces are static values, apply per base jaw and may occur simultaneously. $M_y$ may arise in addition to the moment generated by the gripping force itself. If the max. permitted finger weight is exceeded, it is imperative to throttle the air pressure so that the jaw movement occurs without any hitting or bouncing. Service life may be reduced.

## Technical data

| Description | | RH 801 KP | RH 801 KP PX C5 | RH 801 KP PX 05 | RH 801 KP PX T5 |
|---|---|---|---|---|---|
| **ID** | | **0360174** | **0360177** | **0360175** | **0360176** |
| Stroke per finger | [mm] | 5 | 5 | 5 | 5 |
| Closing force | [N] | 23 | 23 | 23 | 23 |
| Opening force | [N] | 23 | 23 | 23 | 23 |
| Weight | [kg] | 0.15 | 0.15 | 0.15 | 0.15 |
| Recommended workpiece weight | [kg] | 0.115 | 0.115 | 0.115 | 0.115 |
| Air consumption per double stroke | [cm³] | 2 | 2 | 2 | 2 |
| Min./max. operating pressure | [bar] | 2/7 | 2/7 | 2/7 | 2/7 |
| Nominal operating pressure | [bar] | 6 | 6 | 6 | 6 |
| Closing/opening time | [s] | 0.13/0.1 | 0.13/0.1 | 0.13/0.1 | 0.13/0.1 |
| Max. permitted finger length | [mm] | 25 | 25 | 25 | 25 |
| Max. permitted weight per finger | [kg] | 0.05 | 0.05 | 0.05 | 0.05 |
| IP class | | 30 | 30 | 30 | 30 |
| Min./max. ambient temperature | [°C] | 5/60 | 5/60 | 5/60 | 5/60 |
| Repeat accuracy | [mm] | 0.02 | 0.02 | 0.02 | 0.02 |

## Main view

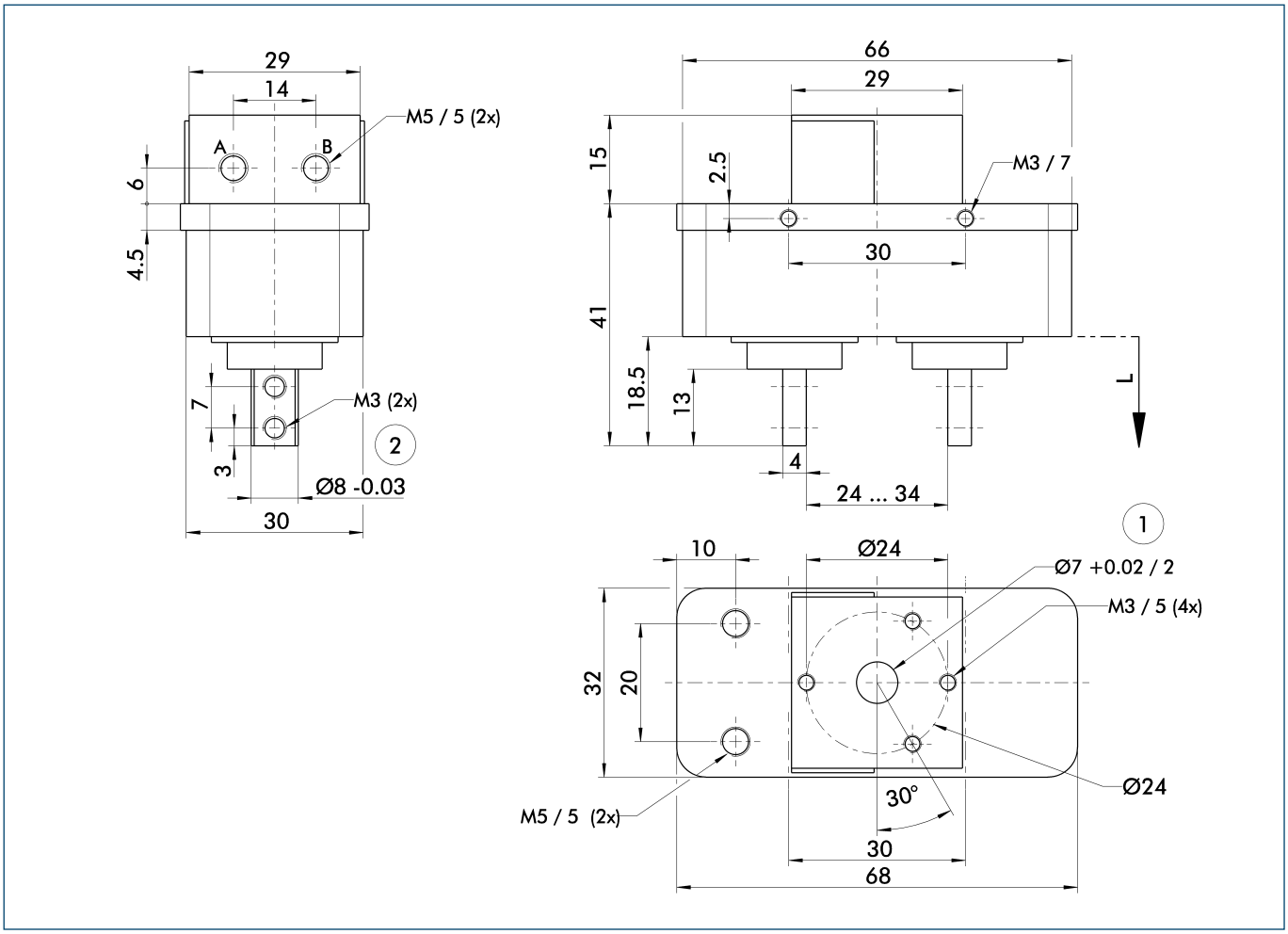


The drawing shows the gripper in the basic version with closed jaws, the dimensions do not include the options described below.

A, a Main/direct connection, gripper opening
B, b Main/direct connection, gripper closing

① Gripper connection
② Finger connection

ⓘ The SDV-P pressure maintenance valve can be used as a gripping force maintenance device (see "Accessories" catalog section).

## Attachment to the proximity switch

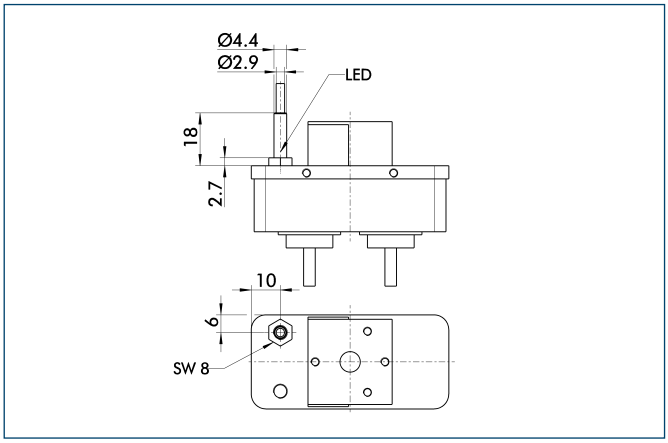


For PX-versions, the scope of delivery comprises the sensor and installation material.

**Sizes**
8 ... 40

**Weight**
0.03 kg ... 1.6 kg

**Gripping force**
26 N ... 1090 N

**Stroke per finger**
2 mm ... 13 mm

**Workpiece weight**
0.13 kg ... 4.2 kg

## Application example

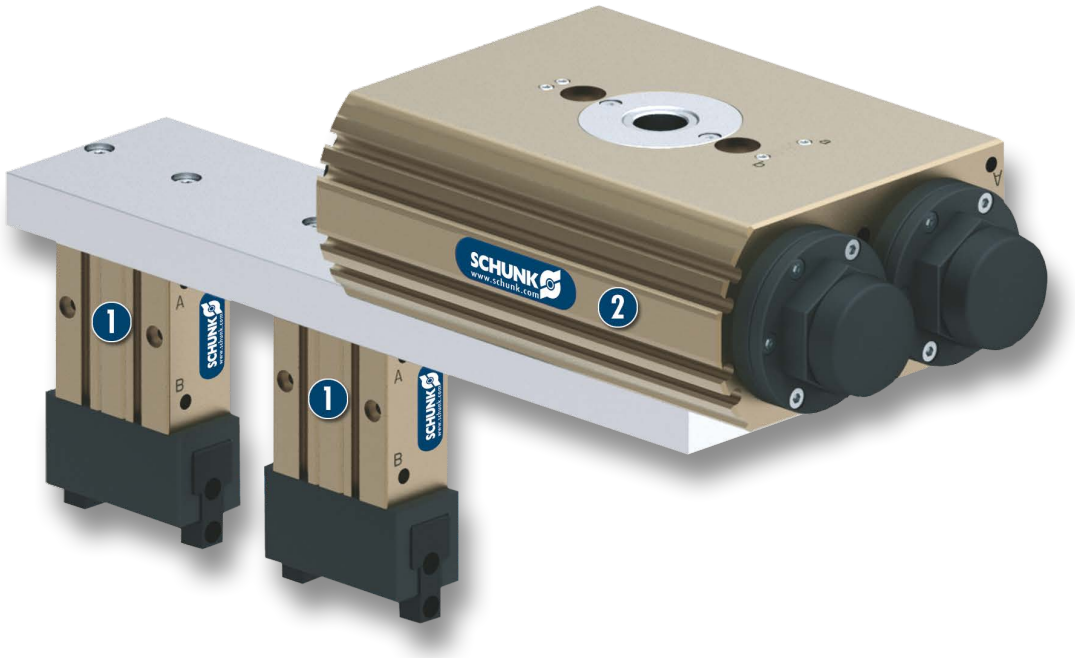


**Pneumatic double transfer unit**

1. 2-Finger Parallel Gripper LGP
2. Universal Rotary Actuator SRU-plus

## Universal Gripper
universal 2-Finger Parallel Gripper with T-slot guidance and excellent cost-performance ratio

## Field of application
universal application in clean surroundings, such as assembly areas



## Your advantages and benefits

**Function optimized gripper type**
for maximum cost effectiveness

**Stable, ground T-groove slideway**
for highest precision in handling

**Matching SCHUNK C-slot switch**
for process reliable position interrogation

**Hard-anodized or hardened functional components**
for long lifetime

**Centering sleeves**
for a repeat accurate exchange of grippers and fingers

**Compact dimensions**
for minimized interfering contours

## General note to the series

**Principle of function**
Wedge-hook kinematics

**Housing material**
Aluminum alloy, hard-anodized

**Base jaw material**
Steel

**Actuation**
pneumatic, with filtered compressed air (10 microns): dry, lubricated or non-lubricated
Pressure medium: Required quality class of compressed air according to DIN ISO 8573-1: 6 4 4

**Warranty**
24 months (details, general terms and conditions and operation manuals can be downloaded under www.schunk.com)

**Scope of delivery**
Centering elements, assembly and operating instruction with manufacturer's declaration

## Sectional diagram

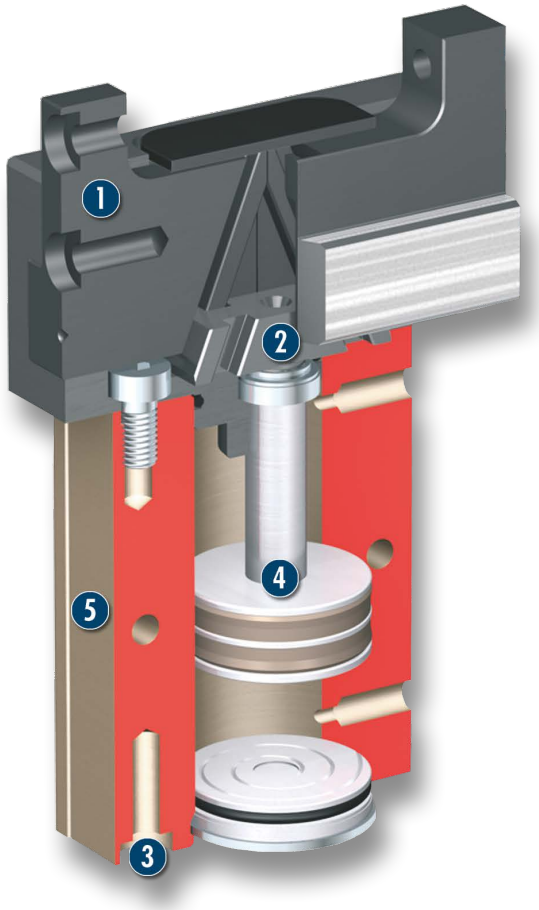


**1 Base jaw**
for the connection of workpiece-specific gripper fingers

**2 Wedge-hook design**
for high power transmission and centric gripping

**3 Centering and mounting possibilities**
for assembly of the gripper to a base area and at the long side

**4 Drive**
pneumatic piston drive

**5 Housing**
weight-optimized through application of hard-anodized, high-strength aluminum alloy

## Functional description

The round piston is moved up or down by compressed air.
Through its angled active surfaces, the wedge hook transforms this movement into the lateral, synchronous gripping movement of both base jaws.

## Options and special information

Monitoring with a SCHUNK MMS 22 or RMS 22 sensor is not possible. The use of the recommended sensors MZN and RZN is not compulsory.

## Accessories

Accessories from SCHUNK – the suitable supplement for maximum functionality, reliability and performance of all automation modules.

### Centering sleeves



### Fittings



### Inductive proximity switches



### Programmable magnetic switch



### Pressure maintenance valve





### Sensor cables



### Sensor Distributor

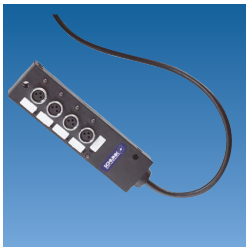

ⓘ For the exact size of the required accessories, availability of this size and the designation and ID, please refer to the additional views at the end of the size in question. You will find more detailed information on our accessory range in the “Accessories” catalog section.

## General note to the series

### Gripping force

is the arithmetic total of the gripping force applied to each finger at distance P (see illustration) measured from the upper edge of the gripper.

### Finger length

The finger length is measured from the upper edge of the gripper housing in the direction of the main axis.

### Repeat accuracy

is defined as the spread of the limit position after 100 consecutive strokes.

### Workpiece weight

The recommended workpiece weight is calculated for a force-type connection with a coefficient of friction of 0.1 and a safety factor of 2 against slippage of the workpiece on acceleration due to gravity g. Considerably heavier workpiece weights are permitted with form-fit gripping.

### Closing and opening times

Closing and opening times are purely the times that the base jaws or fingers are in motion. Valve switching times, hose filling times or PLC reaction times are not included in the above times and must be taken into consideration when determining cycle times.

# LGP 8





## Gripping force, I.D. gripping

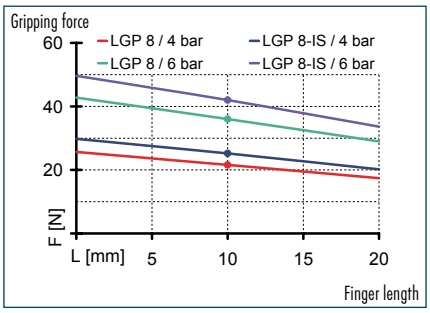


## Gripping force, O.D. gripping

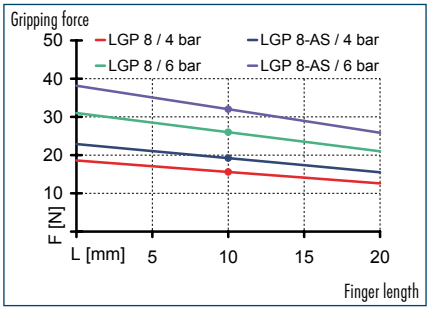


## Finger load

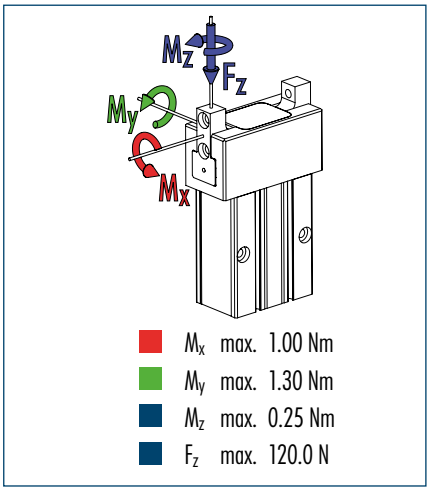


ⓘ The indicated moments and forces are static values, apply per base jaw and may occur simultaneously. $M_y$ may arise in addition to the moment generated by the gripping force itself. If the max. permitted finger weight is exceeded, it is imperative to throttle the air pressure so that the jaw movement occurs without any hitting or bouncing. Service life may be reduced.

## Technical data

| Description | | LGP 8 | LGP 8-AS | LGP 8-IS |
|---|---|---|---|---|
| ID | | 0312900 | 0312901 | 0312902 |
| Stroke per finger | [mm] | 2 | 2 | 2 |
| Closing force | [N] | 26 | 32 | |
| Opening force | [N] | 36 | | 42 |
| Min. spring force | [N] | | 6 | 6 |
| Weight | [kg] | 0.03 | 0.04 | 0.04 |
| Recommended workpiece weight | [kg] | 0.13 | 0.13 | 0.13 |
| Air consumption per double stroke | [cm³] | 0.9 | 0.9 | 0.9 |
| Min./max. operating pressure | [bar] | 2/8 | 4/6.5 | 4/6.5 |
| Nominal operating pressure | [bar] | 6 | 6 | 6 |
| Closing/opening time | [s] | 0.01/0.01 | 0.01/0.02 | 0.02/0.01 |
| Max. permitted finger length | [mm] | 20 | 20 | 20 |
| Max. permitted weight per finger | [kg] | 0.03 | 0.03 | 0.03 |
| IP class | | 40 | 40 | 40 |
| Min./max. ambient temperature | [°C] | -10/90 | -10/90 | -10/90 |
| Repeat accuracy | [mm] | 0.02 | 0.02 | 0.02 |

## Main view

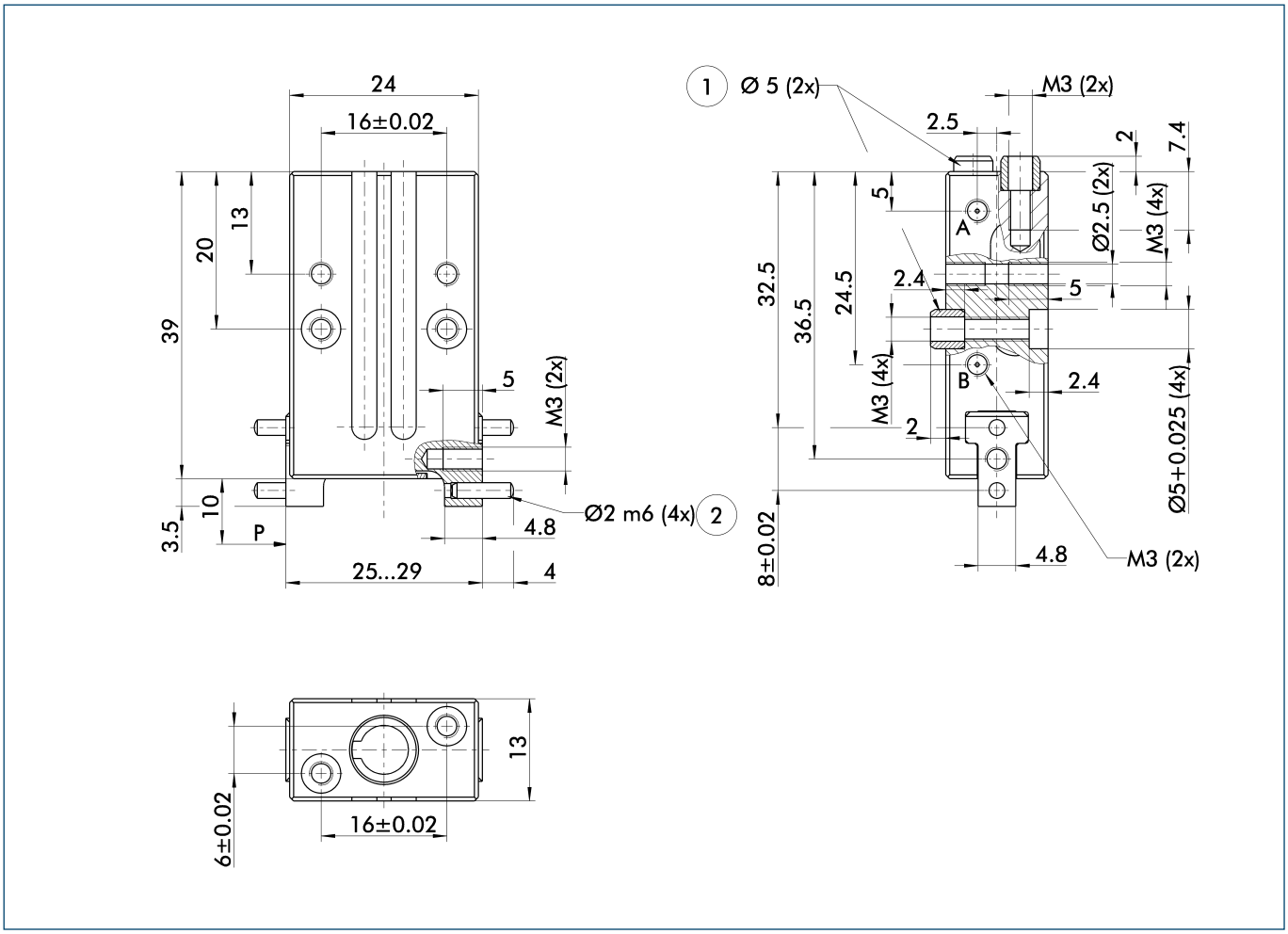


The drawing shows the gripper in the basic version with closed jaws, the dimensions do not include the options described below.

A, a Main/direct connection, gripper opening
B, b Main/direct connection, gripper closing

① Gripper connection
② Finger connection

## Clamping plate for sensor

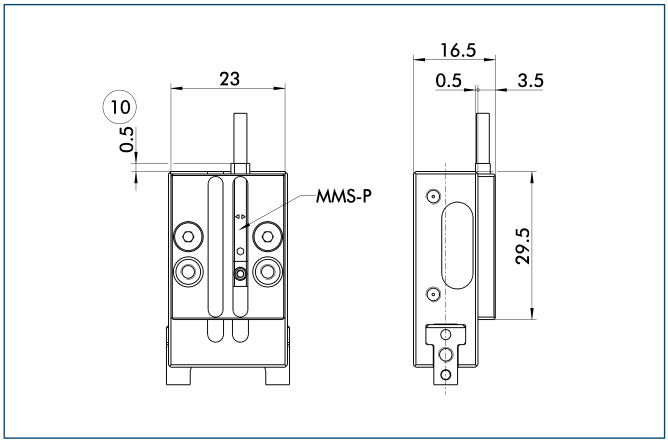


⑩ Projection applies only for AS version

The magnetic switches have to be clamped together with the clamping plate at the gripper housing.

## Programmable magnetic switch

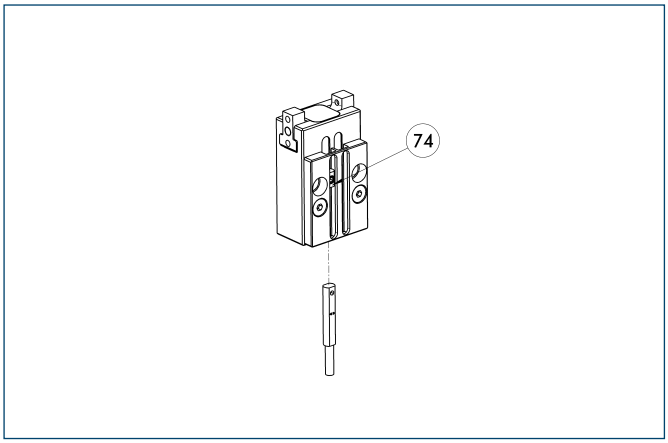


74 Stop for MMS-P

Position monitoring with two programmable positions per sensor. The end position monitoring is mounted in the C-slot.

| Description | ID | Recommended product |
|---|---|---|
| Programmable magnetic switch | | |
| MMS-P 22-S-M8-PNP | **0301370** | • |
| MMSK-P 22-S-PNP | **0301371** | |
| Connection cables | | |
| KA BG08-L 4P-0500 | **0307767** | |
| KA BG08-L 4P-1000 | **0307768** | |
| KA BW08-L 4P-0500 | **0307765** | |
| KA BW08-L 4P-1000 | **0307766** | |
| Sensor Distributor | | |
| V2-M8-4P-2XM8-3P | **0301380** | |

ⓘ Please note the minimum permitted bending radii for the sensor cables, which are generally 35 mm.

ⓘ Per gripper one sensor (closer/NO) is required, optionally a cable extension.

You can find more detailed information and individual parts of the above-mentioned accessories in the “Accessories” catalog section.

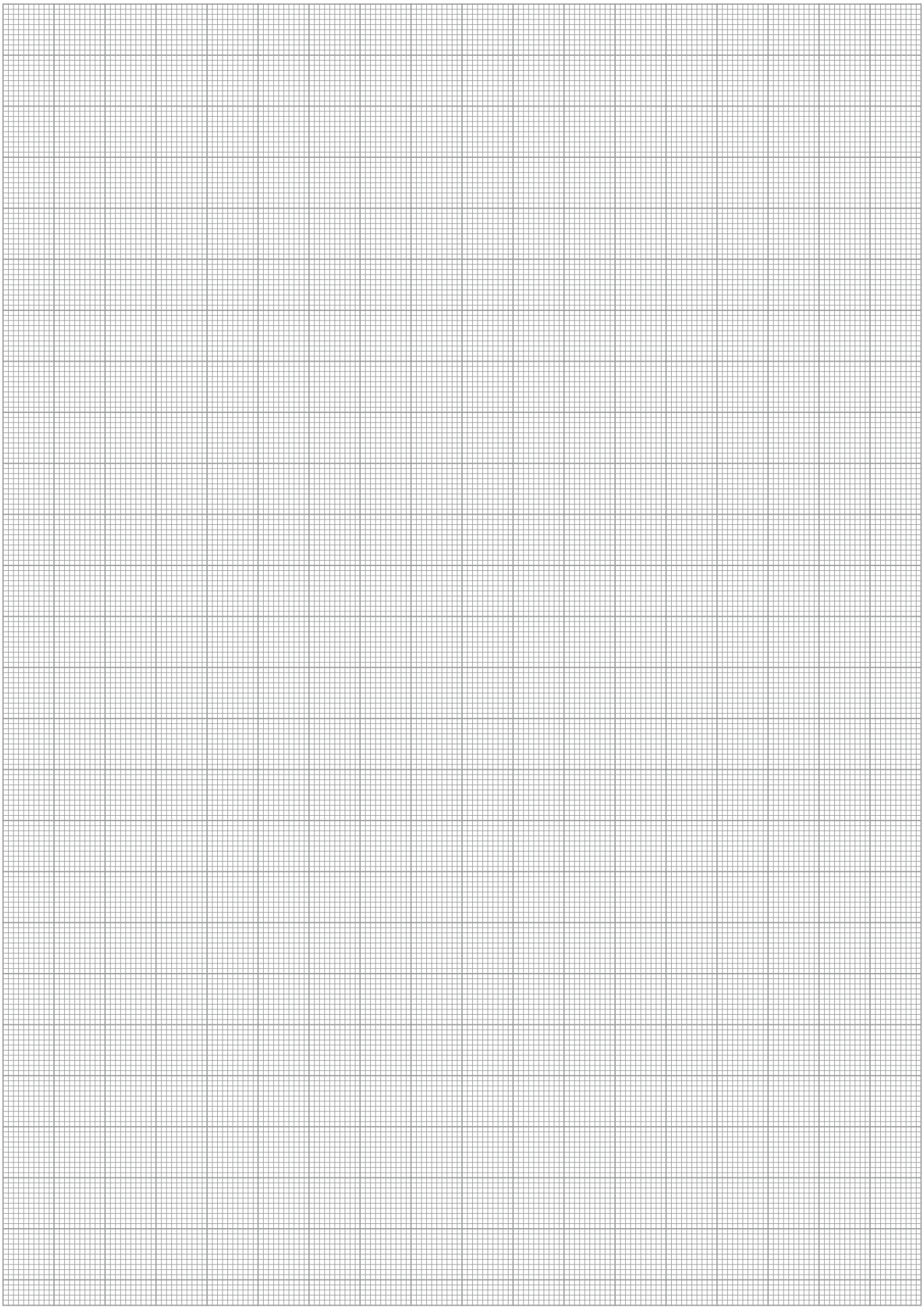

# LGP 10

**Pneumatic • 2-Finger Parallel Gripper • Universal Gripper**

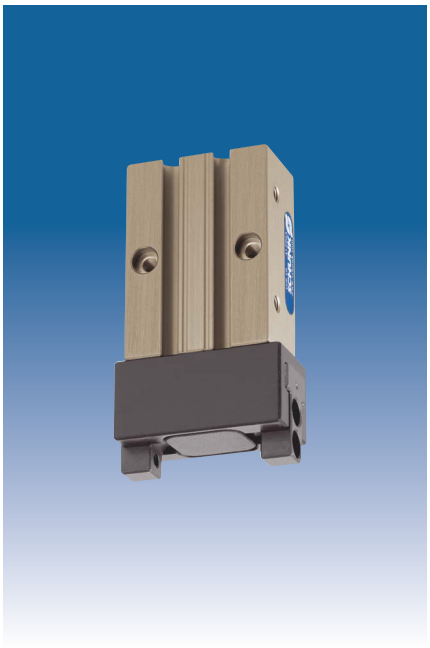

## Gripping force, I.D. gripping

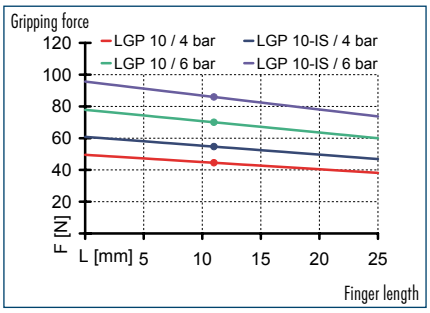


## Gripping force, O.D. gripping

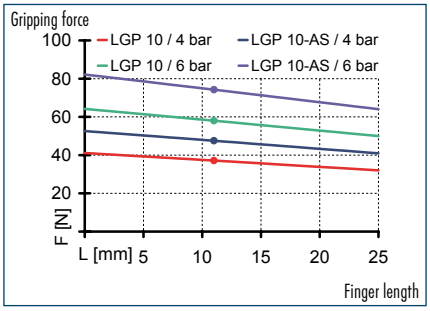


## Finger load

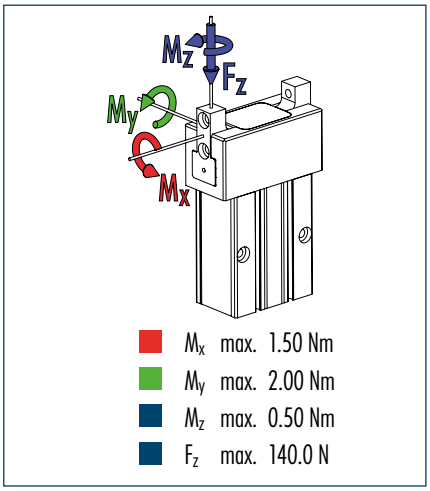


ⓘ The indicated moments and forces are static values, apply per base jaw and may occur simultaneously. $M_y$ may arise in addition to the moment generated by the gripping force itself. If the max. permitted finger weight is exceeded, it is imperative to throttle the air pressure so that the jaw movement occurs without any hitting or bouncing. Service life may be reduced.

## Technical data

| Description | | LGP 10 | LGP 10-AS | LGP 10-IS |
|---|---|---|---|---|
| ID | | 0312903 | 0312904 | 0312905 |
| Stroke per finger | [mm] | 3 | 3 | 3 |
| Closing force | [N] | 58 | 74 | |
| Opening force | [N] | 70 | | 86 |
| Min. spring force | [N] | | 16 | 16 |
| Weight | [kg] | 0.07 | 0.08 | 0.08 |
| Recommended workpiece weight | [kg] | 0.29 | 0.29 | 0.29 |
| Air consumption per double stroke | [cm³] | 1.8 | 1.8 | 1.8 |
| Min./max. operating pressure | [bar] | 2/8 | 4/6.5 | 4/6.5 |
| Nominal operating pressure | [bar] | 6 | 6 | 6 |
| Closing/opening time | [s] | 0.01/0.01 | 0.01/0.02 | 0.02/0.01 |
| Max. permitted finger length | [mm] | 25 | 25 | 25 |
| Max. permitted weight per finger | [kg] | 0.04 | 0.04 | 0.04 |
| IP class | | 40 | 40 | 40 |
| Min./max. ambient temperature | [°C] | -10/90 | -10/90 | -10/90 |
| Repeat accuracy | [mm] | 0.02 | 0.02 | 0.02 |

## Main view

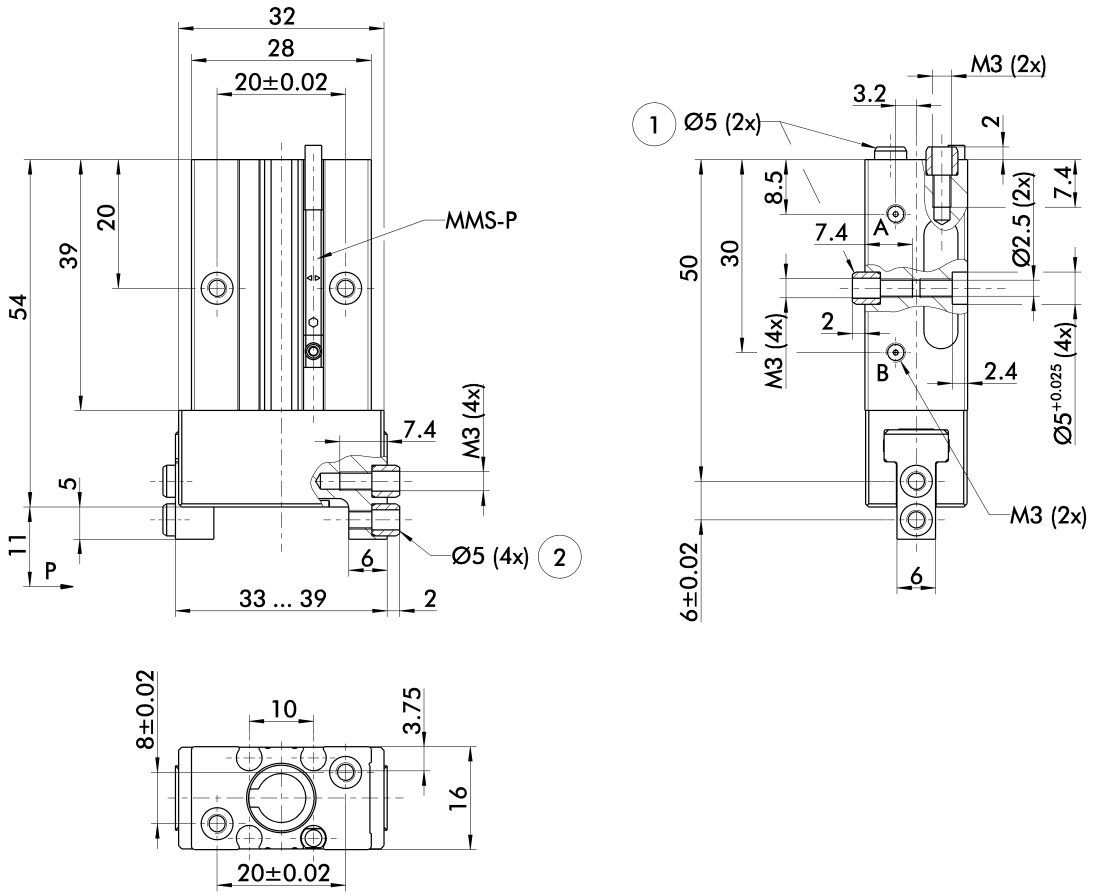


The drawing shows the gripper in the basic version with closed jaws, the dimensions do not include the options described below.

A, a Main/direct connection, gripper opening
B, b Main/direct connection, gripper closing
① Gripper connection
② Finger connection

## Programmable magnetic switch

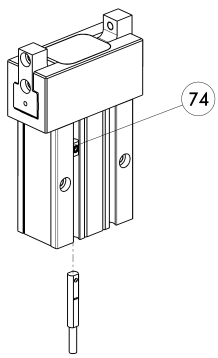


74 Stop for MMS-P

Position monitoring with two programmable positions per sensor. The end position monitoring is mounted in the C-slot.

| Description | ID | Recommended product |
|---|---|---|
| Programmable magnetic switch | | |
| MMS-P 22-S-M8-PNP | **0301370** | • |
| MMSK-P 22-S-PNP | **0301371** | |
| Connection cables | | |
| KA BG08-L 4P-0500 | **0307767** | |
| KA BG08-L 4P-1000 | **0307768** | |
| KA BW08-L 4P-0500 | **0307765** | |
| KA BW08-L 4P-1000 | **0307766** | |
| Sensor Distributor | | |
| V2-M8-4P-2XM8-3P | **0301380** | |

ⓘ Please note the minimum permitted bending radii for the sensor cables, which are generally 35 mm.
ⓘ Per gripper one sensor (closer/NO) is required, optionally a cable extension.

You can find more detailed information and individual parts of the above-mentioned accessories in the “Accessories” catalog section.

# LGP 16

**Pneumatic • 2-Finger Parallel Gripper • Universal Gripper**



## Gripping force, I.D. gripping

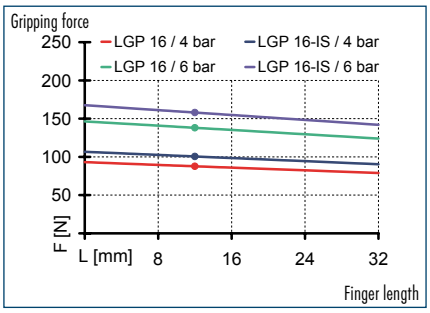


## Gripping force, O.D. gripping

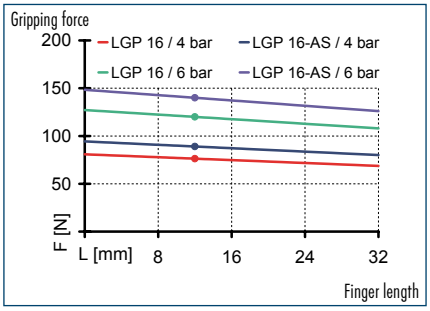


## Finger load

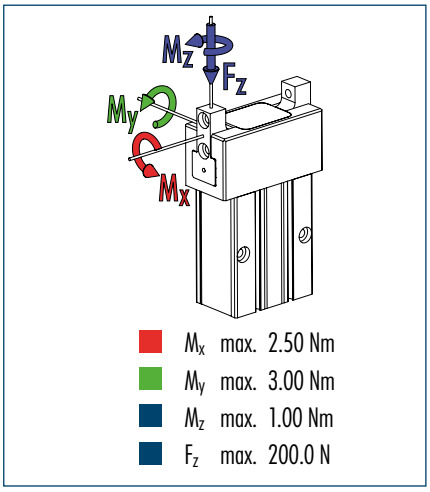


ⓘ The indicated moments and forces are static values, apply per base jaw and may occur simultaneously. $M_y$ may arise in addition to the moment generated by the gripping force itself. If the max. permitted finger weight is exceeded, it is imperative to throttle the air pressure so that the jaw movement occurs without any hitting or bouncing. Service life may be reduced.

## Technical data

| Description | | LGP 16 | LGP 16-AS | LGP 16-IS |
|---|---|---|---|---|
| **ID** | | **0312906** | **0312907** | **0312908** |
| Stroke per finger | [mm] | 5 | 5 | 5 |
| Closing force | [N] | 120 | 140 | |
| Opening force | [N] | 138 | | 158 |
| Min. spring force | [N] | | 20 | 20 |
| Weight | [kg] | 0.15 | 0.16 | 0.16 |
| Recommended workpiece weight | [kg] | 0.6 | 0.6 | 0.6 |
| Air consumption per double stroke | [cm³] | 7 | 7 | 7 |
| Min./max. operating pressure | [bar] | 2/8 | 4/6.5 | 4/6.5 |
| Nominal operating pressure | [bar] | 6 | 6 | 6 |
| Closing/opening time | [s] | 0.02/0.02 | 0.02/0.03 | 0.03/0.02 |
| Max. permitted finger length | [mm] | 32 | 32 | 32 |
| Max. permitted weight per finger | [kg] | 0.06 | 0.06 | 0.06 |
| IP class | | 40 | 40 | 40 |
| Min./max. ambient temperature | [°C] | -10/90 | -10/90 | -10/90 |
| Repeat accuracy | [mm] | 0.02 | 0.02 | 0.02 |

## Main view

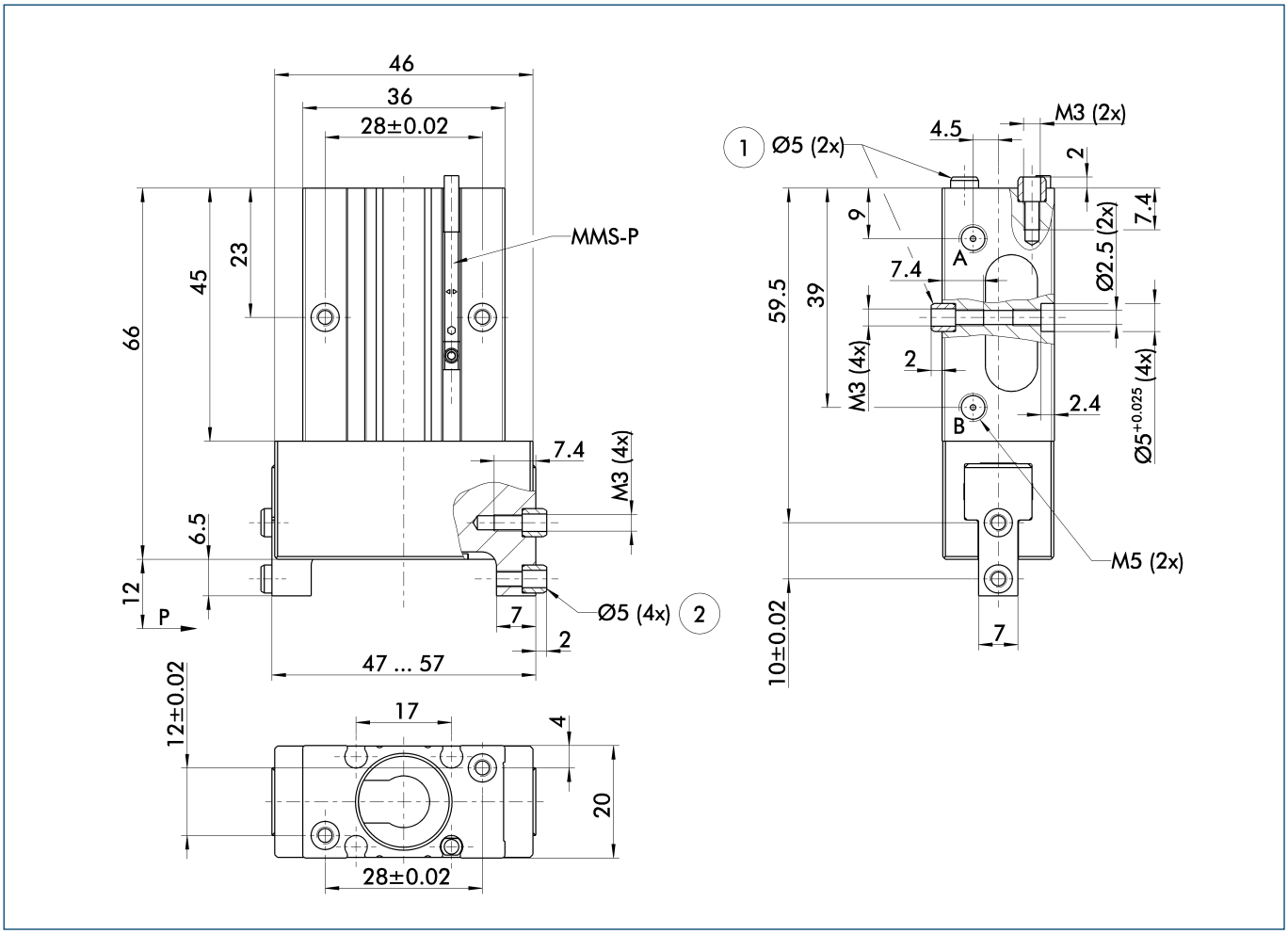


The drawing shows the gripper in the basic version with closed jaws, the dimensions do not include the options described below.

A, a Main/direct connection, gripper opening
B, b Main/direct connection, gripper closing
① Gripper connection
② Finger connection

## Programmable magnetic switch

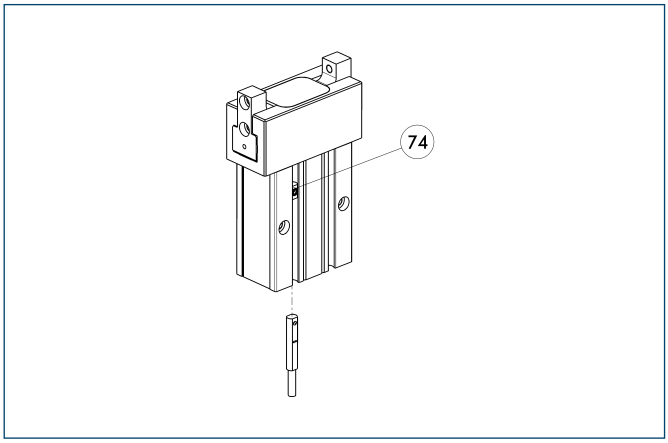


74 Stop for MMS-P

Position monitoring with two programmable positions per sensor. The end position monitoring is mounted in the C-slot.

| Description | ID | Recommended product |
|---|---|---|
| Programmable magnetic switch | | |
| MMS-P 22-S-M8-PNP | **0301370** | • |
| MMSK-P 22-S-PNP | **0301371** | |
| Connection cables | | |
| KA BG08-L 4P-0500 | **0307767** | |
| KA BG08-L 4P-1000 | **0307768** | |
| KA BW08-L 4P-0500 | **0307765** | |
| KA BW08-L 4P-1000 | **0307766** | |
| Sensor Distributor | | |
| V2-M8-4P-2XM8-3P | **0301380** | |

ⓘ Please note the minimum permitted bending radii for the sensor cables, which are generally 35 mm.
ⓘ Per gripper one sensor (closer/NO) is required, optionally a cable extension.

You can find more detailed information and individual parts of the above-mentioned accessories in the “Accessories” catalog section.

# LGP 20

**Pneumatic • 2-Finger Parallel Gripper • Universal Gripper**



## Gripping force, I.D. gripping

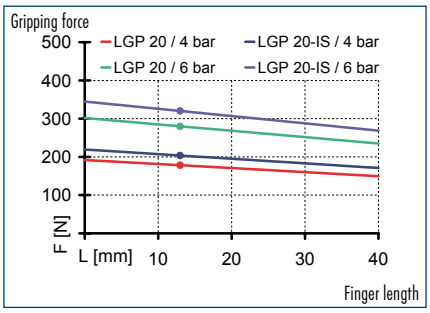


## Gripping force, O.D. gripping

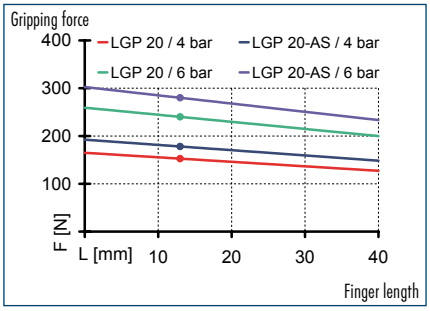


## Finger load

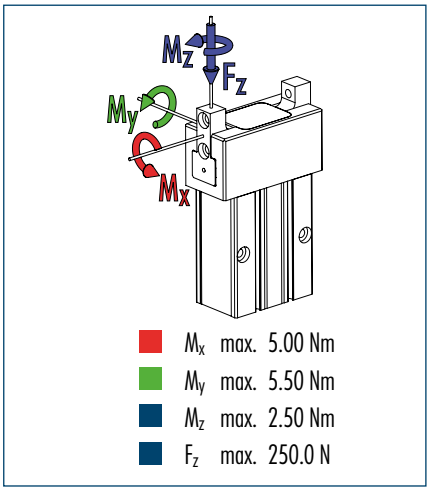


ⓘ The indicated moments and forces are static values, apply per base jaw and may occur simultaneously. $M_y$ may arise in addition to the moment generated by the gripping force itself. If the max. permitted finger weight is exceeded, it is imperative to throttle the air pressure so that the jaw movement occurs without any hitting or bouncing. Service life may be reduced.

## Technical data

| Description | | LGP 20 | LGP 20-AS | LGP 20-IS |
|---|---|---|---|---|
| ID | | 0312909 | 0312910 | 0312911 |
| Stroke per finger | [mm] | 6 | 6 | 6 |
| Closing force | [N] | 240 | 280 | |
| Opening force | [N] | 280 | | 320 |
| Min. spring force | [N] | | 40 | 40 |
| Weight | [kg] | 0.24 | 0.25 | 0.25 |
| Recommended workpiece weight | [kg] | 1.2 | 1.2 | 1.2 |
| Air consumption per double stroke | [cm³] | 13 | 13 | 13 |
| Min./max. operating pressure | [bar] | 2/8 | 4/6.5 | 4/6.5 |
| Nominal operating pressure | [bar] | 6 | 6 | 6 |
| Closing/opening time | [s] | 0.03/0.03 | 0.02/0.04 | 0.04/0.02 |
| Max. permitted finger length | [mm] | 40 | 40 | 40 |
| Max. permitted weight per finger | [kg] | 0.09 | 0.09 | 0.09 |
| IP class | | 40 | 40 | 40 |
| Min./max. ambient temperature | [°C] | -10/90 | -10/90 | -10/90 |
| Repeat accuracy | [mm] | 0.02 | 0.02 | 0.02 |

## Main view

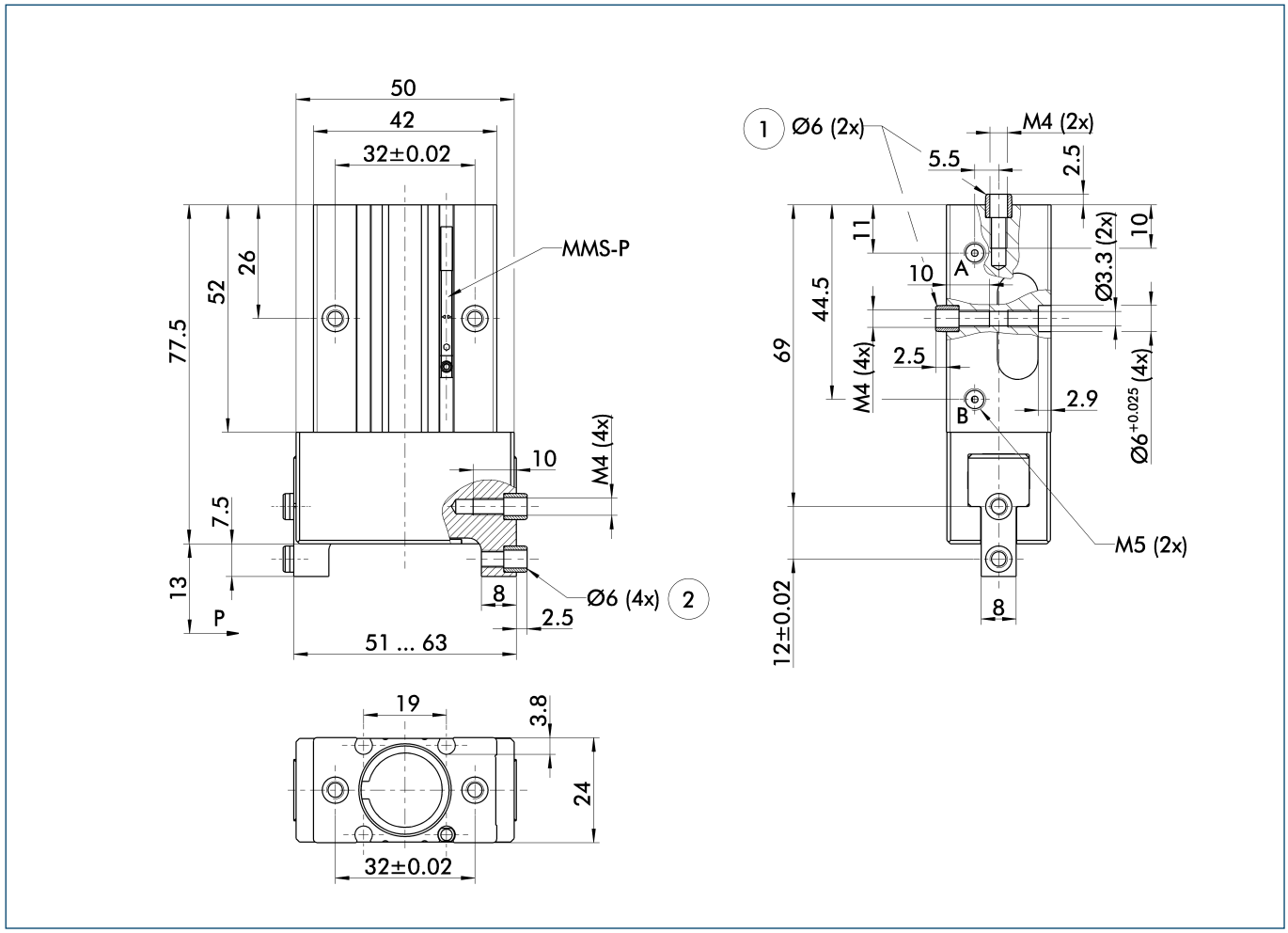


The drawing shows the gripper in the basic version with closed jaws, the dimensions do not include the options described below.

A, a Main/direct connection, gripper opening
B, b Main/direct connection, gripper closing
① Gripper connection
② Finger connection

## Programmable magnetic switch

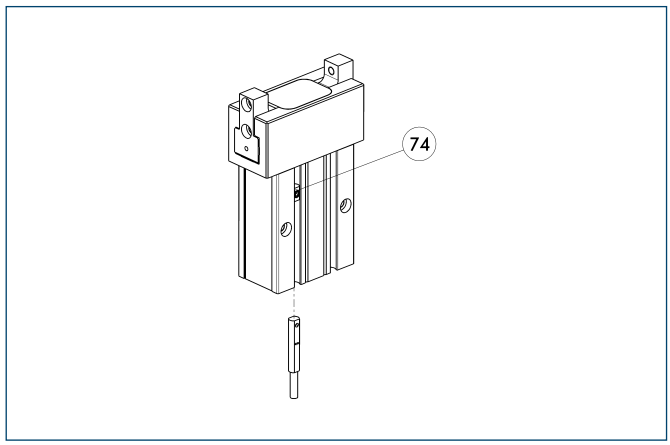


74 Stop for MMS-P

Position monitoring with two programmable positions per sensor. The end position monitoring is mounted in the C-slot.

| Description | ID | Recommended product |
|---|---|---|
| Programmable magnetic switch | | |
| MMS-P 22-S-M8-PNP | **0301370** | • |
| MMSK-P 22-S-PNP | **0301371** | |
| Connection cables | | |
| KA BG08-L 4P-0500 | **0307767** | |
| KA BG08-L 4P-1000 | **0307768** | |
| KA BW08-L 4P-0500 | **0307765** | |
| KA BW08-L 4P-1000 | **0307766** | |
| Sensor Distributor | | |
| V2-M8-4P-2XM8-3P | **0301380** | |

ⓘ Please note the minimum permitted bending radii for the sensor cables, which are generally 35 mm.
ⓘ Per gripper one sensor (closer/NO) is required, optionally a cable extension.

You can find more detailed information and individual parts of the above-mentioned accessories in the “Accessories” catalog section.

# LGP 25

**Pneumatic • 2-Finger Parallel Gripper • Universal Gripper**



## Gripping force, I.D. gripping

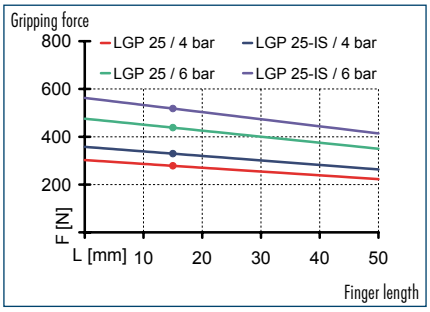


## Gripping force, O.D. gripping

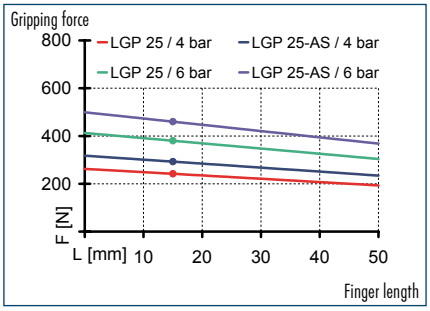


## Finger load

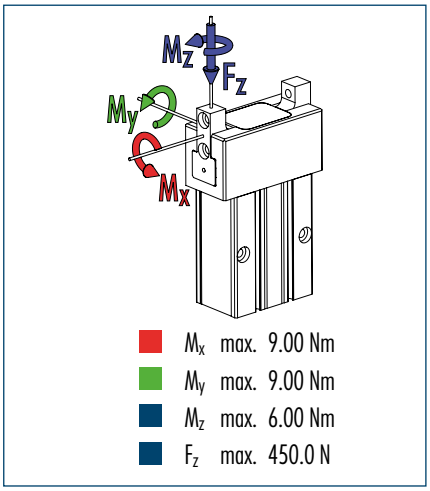


ⓘ The indicated moments and forces are static values, apply per base jaw and may occur simultaneously. $M_y$ may arise in addition to the moment generated by the gripping force itself. If the max. permitted finger weight is exceeded, it is imperative to throttle the air pressure so that the jaw movement occurs without any hitting or bouncing. Service life may be reduced.

## Technical data

| Description | | LGP 25 | LGP 25-AS | LGP 25-IS |
|---|---|---|---|---|
| ID | | 0312912 | 0312913 | 0312914 |
| Stroke per finger | [mm] | 8 | 8 | 8 |
| Closing force | [N] | 380 | 460 | |
| Opening force | [N] | 438 | | 518 |
| Min. spring force | [N] | | 80 | 80 |
| Weight | [kg] | 0.46 | 0.48 | 0.48 |
| Recommended workpiece weight | [kg] | 1.9 | 1.9 | 1.9 |
| Air consumption per double stroke | [cm³] | 27 | 27 | 27 |
| Min./max. operating pressure | [bar] | 2/8 | 4/6.5 | 4/6.5 |
| Nominal operating pressure | [bar] | 6 | 6 | 6 |
| Closing/opening time | [s] | 0.05/0.05 | 0.04/0.07 | 0.07/0.04 |
| Max. permitted finger length | [mm] | 50 | 50 | 50 |
| Max. permitted weight per finger | [kg] | 0.12 | 0.12 | 0.12 |
| IP class | | 40 | 40 | 40 |
| Min./max. ambient temperature | [°C] | -10/90 | -10/90 | -10/90 |
| Repeat accuracy | [mm] | 0.02 | 0.02 | 0.02 |

## Main view

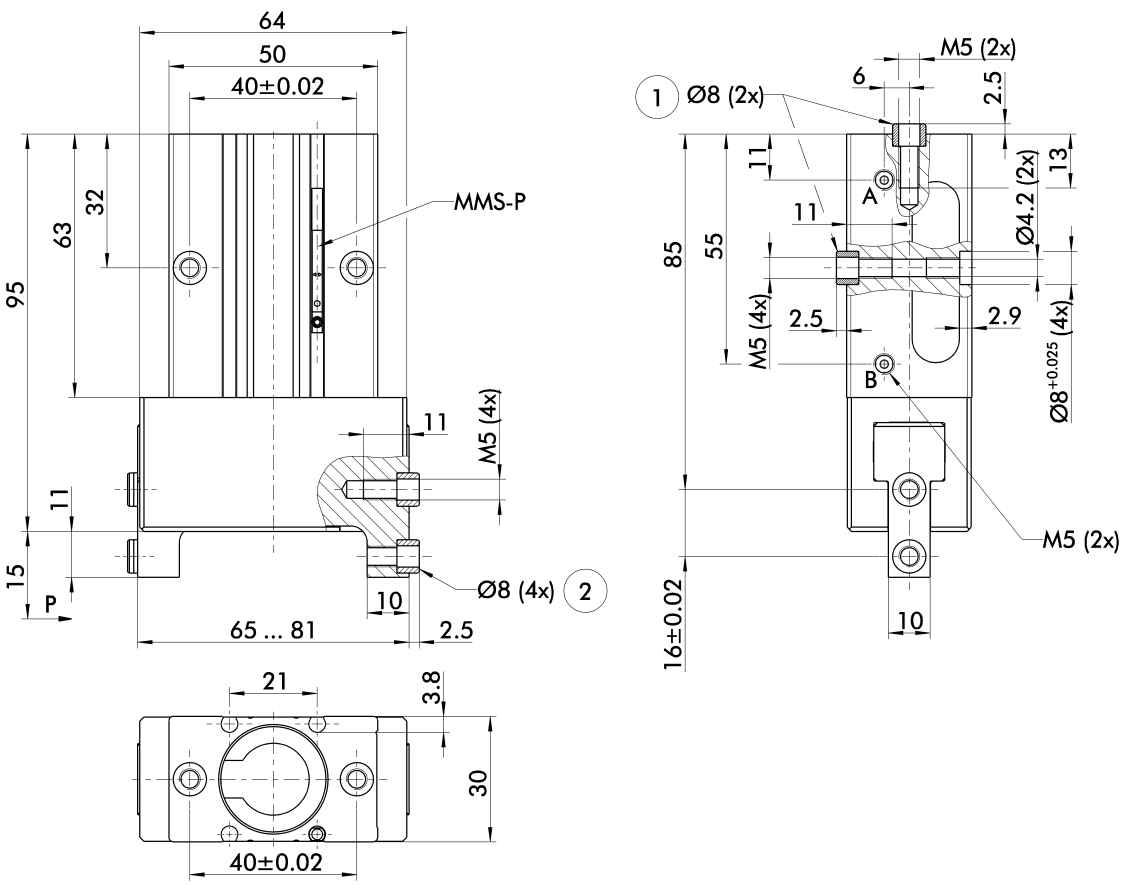


The drawing shows the gripper in the basic version with closed jaws, the dimensions do not include the options described below.

A, a Main/direct connection, gripper opening
B, b Main/direct connection, gripper closing
① Gripper connection
② Finger connection

## Programmable magnetic switch

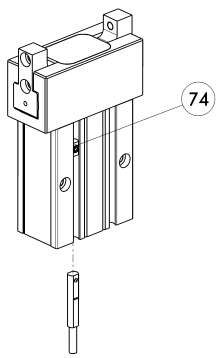


74 Stop for MMS-P

Position monitoring with two programmable positions per sensor. The end position monitoring is mounted in the C-slot.

| Description | ID | Recommended product |
|---|---|---|
| Programmable magnetic switch | | |
| MMS-P 22-S-M8-PNP | **0301370** | • |
| MMSK-P 22-S-PNP | **0301371** | |
| Connection cables | | |
| KA BG08-L 4P-0500 | **0307767** | |
| KA BG08-L 4P-1000 | **0307768** | |
| KA BW08-L 4P-0500 | **0307765** | |
| KA BW08-L 4P-1000 | **0307766** | |
| Sensor Distributor | | |
| V2-M8-4P-2XM8-3P | **0301380** | |

ⓘ Please note the minimum permitted bending radii for the sensor cables, which are generally 35 mm.
ⓘ Per gripper one sensor (closer/NO) is required, optionally a cable extension.

You can find more detailed information and individual parts of the above-mentioned accessories in the “Accessories” catalog section.

# LGP 40

**Pneumatic • 2-Finger Parallel Gripper • Universal Gripper**



## Gripping force, I.D. gripping

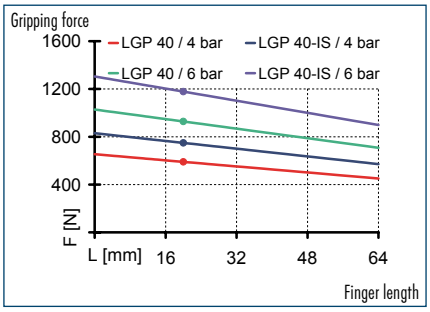


## Gripping force, O.D. gripping

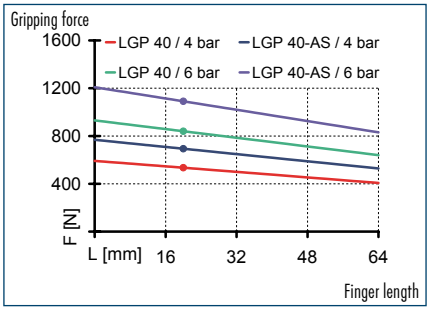


## Finger load

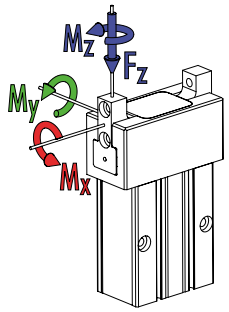


- $M_x$ max. 18.00 Nm
- $M_y$ max. 18.00 Nm
- $M_z$ max. 13.00 Nm
- $F_z$ max. 800.0 N

ⓘ The indicated moments and forces are static values, apply per base jaw and may occur simultaneously. $M_y$ may arise in addition to the moment generated by the gripping force itself. If the max. permitted finger weight is exceeded, it is imperative to throttle the air pressure so that the jaw movement occurs without any hitting or bouncing. Service life may be reduced.

## Technical data

| Description | | LGP 40 | LGP 40-AS | LGP 40-IS |
|---|---|---|---|---|
| **ID** | | **0312915** | **0312916** | **0312917** |
| Stroke per finger | [mm] | 13 | 13 | 13 |
| Closing force | [N] | 840 | 1090 | |
| Opening force | [N] | 928 | | 1178 |
| Min. spring force | [N] | | 250 | 250 |
| Weight | [kg] | 1.5 | 1.6 | 1.6 |
| Recommended workpiece weight | [kg] | 4.2 | 4.2 | 4.2 |
| Air consumption per double stroke | [cm³] | 89 | 89 | 89 |
| Min./max. operating pressure | [bar] | 2/8 | 4/6.5 | 4/6.5 |
| Nominal operating pressure | [bar] | 6 | 6 | 6 |
| Closing/opening time | [s] | 0.1/0.1 | 0.08/0.12 | 0.12/0.08 |
| Max. permitted finger length | [mm] | 64 | 64 | 64 |
| Max. permitted weight per finger | [kg] | 0.3 | 0.3 | 0.3 |
| IP class | | 40 | 40 | 40 |
| Min./max. ambient temperature | [°C] | -10/90 | -10/90 | -10/90 |
| Repeat accuracy | [mm] | 0.02 | 0.02 | 0.02 |

## Main view

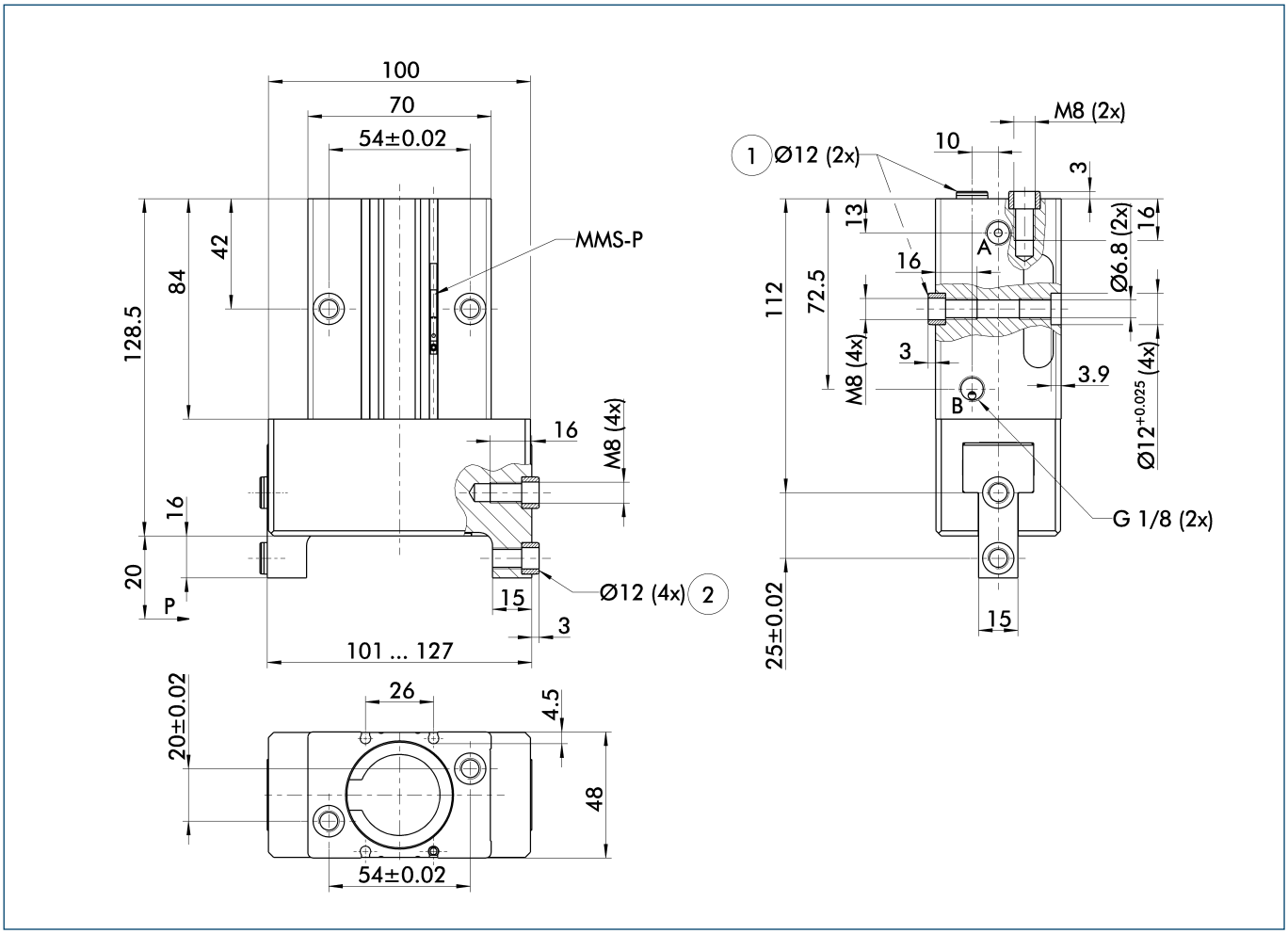


The drawing shows the gripper in the basic version with closed jaws, the dimensions do not include the options described below.

A, a Main/direct connection, gripper opening
B, b Main/direct connection, gripper closing

① Gripper connection
② Finger connection

## Programmable magnetic switch

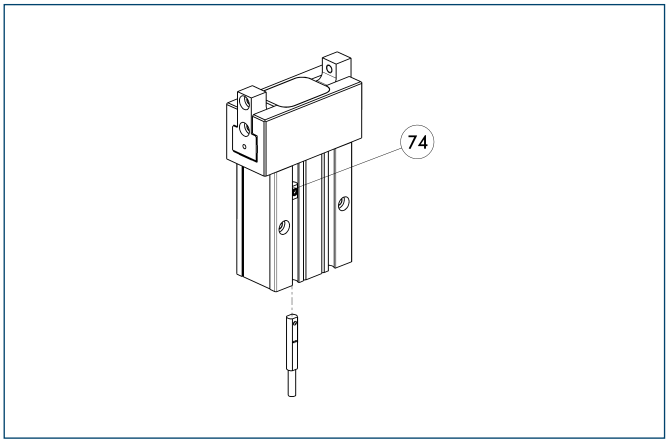


74 Stop for MMS-P

Position monitoring with two programmable positions per sensor. The end position monitoring is mounted in the C-slot.

| Description | ID | Recommended product |
|---|---|---|
| Programmable magnetic switch | | |
| MMS-P 22-S-M8-PNP | **0301370** | • |
| MMSK-P 22-S-PNP | **0301371** | |
| Connection cables | | |
| KA BG08-L 4P-0500 | **0307767** | |
| KA BG08-L 4P-1000 | **0307768** | |
| KA BW08-L 4P-0500 | **0307765** | |
| KA BW08-L 4P-1000 | **0307766** | |
| Sensor Distributor | | |
| V2-M8-4P-2XM8-3P | **0301380** | |

ⓘ Please note the minimum permitted bending radii for the sensor cables, which are generally 35 mm.
ⓘ Per gripper one sensor (closer/NO) is required, optionally a cable extension.

You can find more detailed information and individual parts of the above-mentioned accessories in the “Accessories” catalog section.

# PGN-plus

**Pneumatic • 2-Finger Parallel Gripper • Universal Gripper**

**Sizes**
40 ... 380

**Weight**
0.08 kg ... 39.5 kg

**Gripping force**
123 N ... 21150 N

**Stroke per finger**
2 mm ... 45 mm

**Workpiece weight**
0.62 kg ... 80.5 kg

## Application example

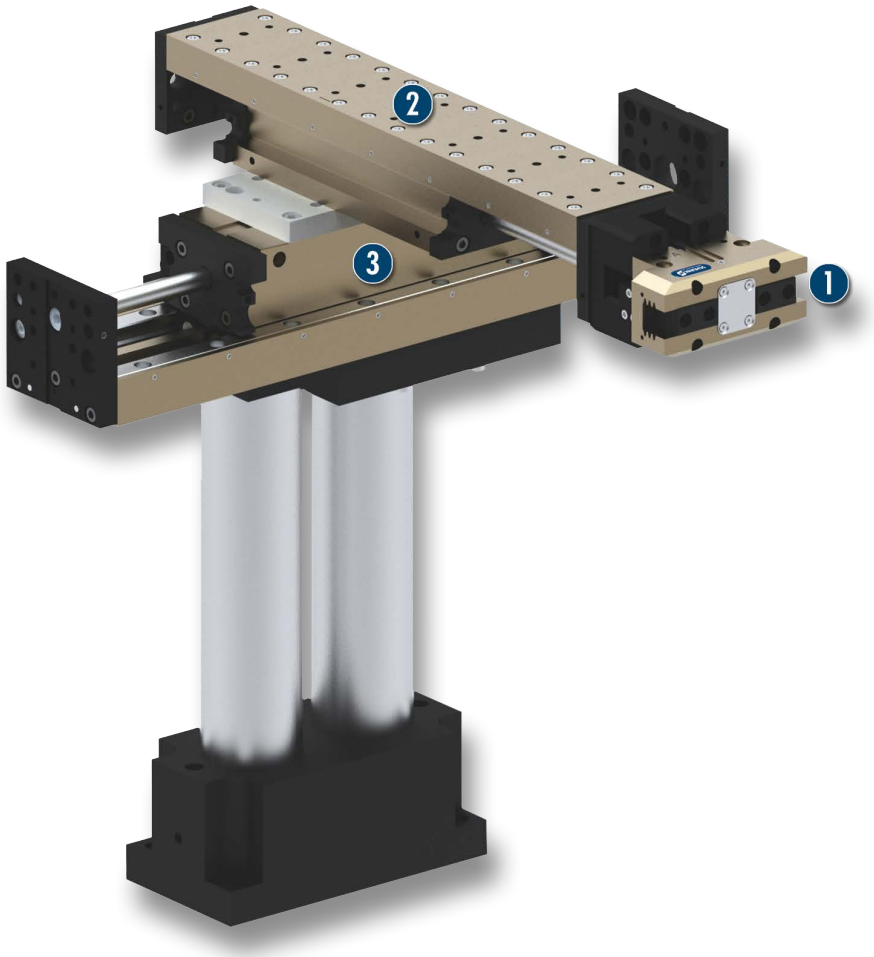


Pick-and-place unit for light to medium-weight components

1. 2-Finger Parallel Gripper PGN-plus
2. Linear module LM
3. Linear module LM

## Universal Gripper

Universal 2-finger parallel gripper with large gripping force and high maximum moments thanks to multi-tooth guidance.

## Field of application

Ideal standard solution for numerous fields of application. For universal use in clean to slightly dirty environments. Special versions available for dirty environments.

## Your advantages and benefits

**Robust multi-tooth guidance**
for precise handling

**High maximum moments possible**
suitable for using long gripper fingers

**Drive concept oval piston**
for maximum gripping forces

**Mounting from two sides in three screw directions possible**
for universal and flexible gripper assembly

**Air supply via hose-free direct connection or screw connections**
for universal and flexible gripper assembly

**Comprehensive sensor accessory program**
for versatile interrogation possibilities and control of stroke position

**Compact dimensions**
for minimal interfering contours in handling

**Manifold options**
for perfect adaption to your case of application (dust protection, high temperature, anti-corrosion and many more)




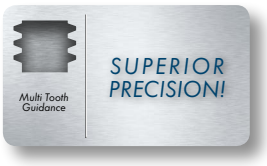


## General note to the series

**Principle of function**
Wedge-hook kinematics

**Housing material**
Aluminum

**Base jaw material**
Steel

**Actuation**
pneumatic, with filtered compressed air (10 microns): dry, lubricated or non-lubricated
Pressure medium: Required quality class of compressed air according to DIN ISO 8573-1: 6 4 4

**Warranty**
36 months (details, general terms and conditions and operation manuals can be downloaded under www.schunk.com)

**Scope of delivery**
Brackets for proximity switches, centering sleeves, O-rings for direct connection, assembly and operating manual with manufacturer's declaration

**Gripping force maintenance device**
with either mechanical gripping force maintenance or SDV-P pressure maintenance valve

## Sectional diagram

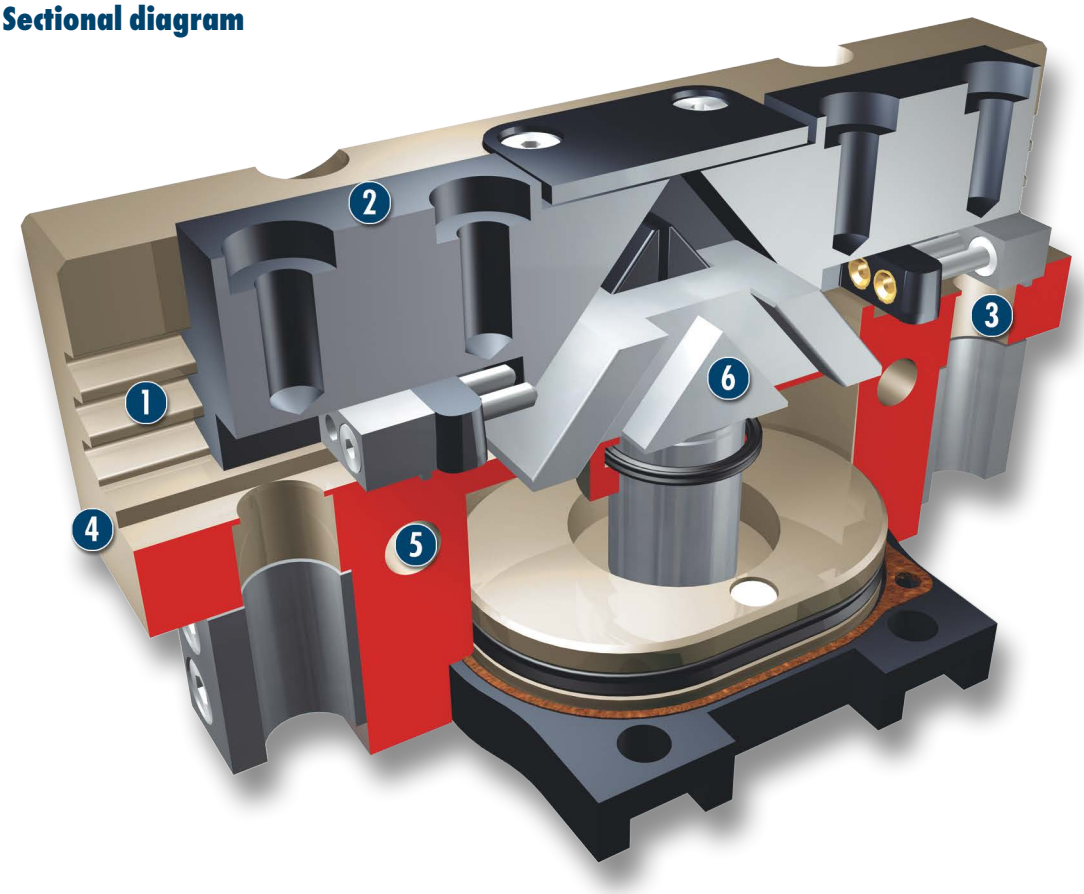


**1 Multiple-tooth guidance**
high-loadable base jaw guidance with minimum play for long fingers

**2 Base jaw**
for the connection of workpiece-specific gripper fingers

**3 Sensor system**
Brackets for proximity switches and adjustable control cams in the housing

**4 Housing**
weight-optimized through application of hard-anodized, high-strength aluminum alloy

**5 Centering and mounting possibilities**
for universal assembly of the gripper

**6 Wedge-hook design**
for high power transmission and centric gripping

## Functional description

The oval piston is moved up or down by means of compressed air.
Through its angled active surfaces, the wedge hook transforms this movement into the lateral, synchronous gripping movement of both base jaws.

## Options and special information

**Dust-protection version**
Absolutely sealed, increased degree of protection against the ingress of materials, for use in dusty environments

**Anti-corrosion version**
for use in corrosion-inducing atmospheres

**High-temperature version**
for use in hot environments

**Force intensified version**
if higher gripping forces are required

**Precision version**
for a higher accuracy

## Accessories

Accessories from SCHUNK – the suitable supplement for maximum functionality, reliability and performance of all automation modules.

### Sensor system



### Fittings



### Universal intermediate jaw



### Compensation unit



### Protection cover



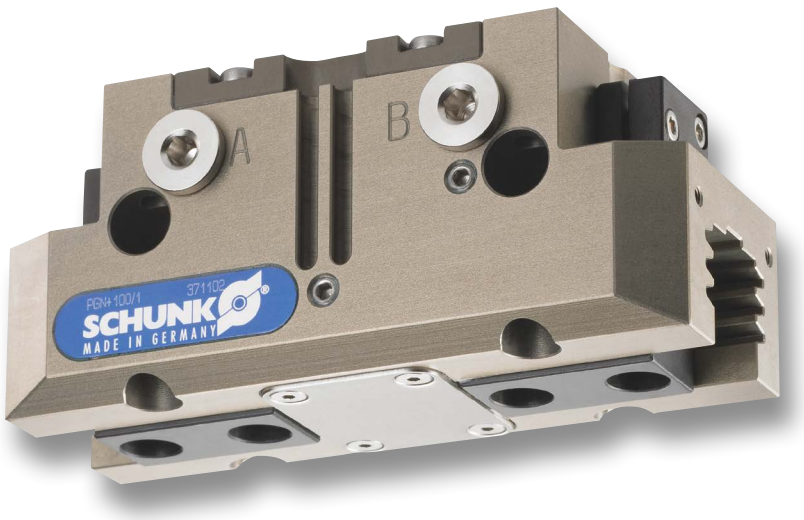


### Sensor cables



### Quick-change Jaw System



### Sensor Distributor

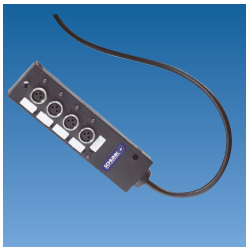

### Pressure maintenance valve



### Finger blanks



### Force measuring jaws




### Analog position sensor

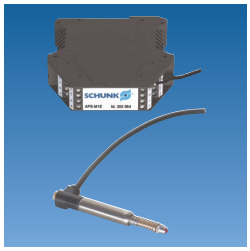

### Flexible Position Sensor

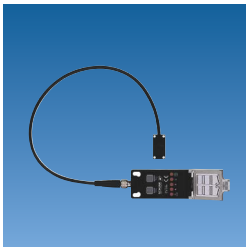

ⓘ For the exact size of the required accessories, availability of this size and the designation and ID, please refer to the additional views at the end of the size in question. You will find more detailed information on our accessory range in the “Accessories” catalog section.

## General note to the series

### Gripping force

is the arithmetic total of the gripping force applied to each finger at distance P (see illustration) measured from the upper edge of the gripper.

### Finger length

The finger length is measured from the upper edge of the gripper housing in the direction of the main axis.

### Repeat accuracy

is defined as the spread of the limit position after 100 consecutive strokes.

### Workpiece weight

The recommended workpiece weight is calculated for a force-type connection with a coefficient of friction of 0.1 and a safety factor of 2 against slippage of the workpiece on acceleration due to gravity g. Considerably heavier workpiece weights are permitted with form-fit gripping.

### Closing and opening times

Closing and opening times are purely the times that the base jaws or fingers are in motion. Valve switching times, hose filling times or PLC reaction times are not included in the above times and must be taken into consideration when determining cycle times.

# PGN-plus 40

**Pneumatic • 2-Finger Parallel Gripper • Universal Gripper**



## Gripping force, I.D. gripping

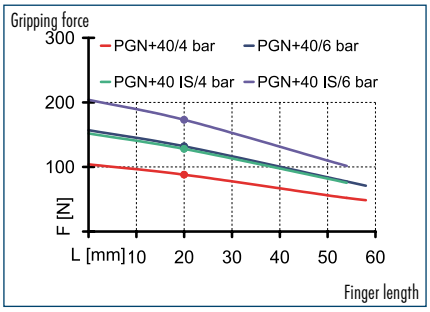


## Gripping force, O.D. gripping

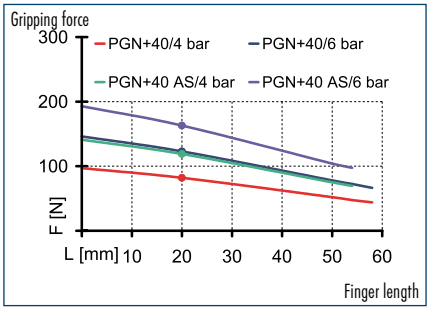


## Finger load

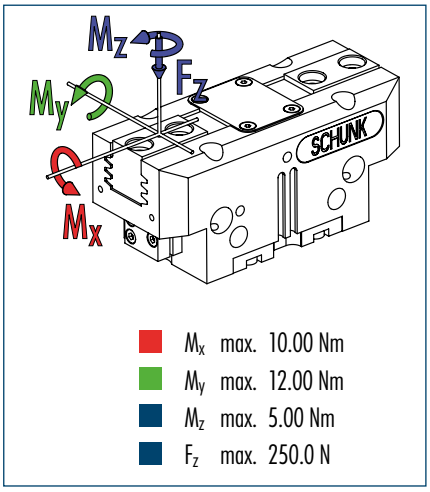


- $M_x$ max. 10.00 Nm
- $M_y$ max. 12.00 Nm
- $M_z$ max. 5.00 Nm
- $F_z$ max. 250.0 N

ⓘ The indicated moments and forces are static values, apply per base jaw and may occur simultaneously. $M_y$ may arise in addition to the moment generated by the gripping force itself. If the max. permitted finger weight is exceeded, it is imperative to throttle the air pressure so that the jaw movement occurs without any hitting or bouncing. Service life may be reduced.

## Technical data

| Description | | PGN-plus 40 | PGN-plus 40-AS | PGN-plus 40-IS |
|---|---|---|---|---|
| **ID** | | **0371080** | **0371082** | **0371084** |
| Stroke per finger | [mm] | 2.5 | 2.5 | 2.5 |
| Closing force | [N] | 123 | 163 | |
| Opening force | [N] | 132 | | |
| Min. spring force | [N] | | 40 | 50 |
| Weight | [kg] | 0.08 | 0.1 | 0.1 |
| Recommended workpiece weight | [kg] | 0.62 | 0.62 | 0.62 |
| Air consumption per double stroke | [cm³] | 2.5 | 5.5 | 5.5 |
| Min./max. operating pressure | [bar] | 2.5/8 | 4/6.5 | 4/6.5 |
| Nominal operating pressure | [bar] | 6 | 6 | 6 |
| Closing/opening time | [s] | 0.02/0.02 | 0.02/0.03 | 0.03/0.02 |
| Max. permitted finger length | [mm] | 58 | 54 | 54 |
| Max. permitted weight per finger | [kg] | 0.1 | 0.1 | 0.1 |
| IP class | | 40 | 40 | 40 |
| Min./max. ambient temperature | [°C] | -10/90 | -10/90 | -10/90 |
| Repeat accuracy | [mm] | 0.01 | 0.01 | 0.01 |
| Cleanroom class ISO-classification 14644-1 | | 5 | 5 | 5 |
| **OPTIONS and their characteristics** | | | | |
| Dust-protection version | | **37371080** | **37371082** | **37371084** |
| IP class | | 64 | 64 | 64 |
| Weight | [kg] | 0.1 | 0.12 | 0.12 |
| Anti-corrosion version | | **38371080** | **38371082** | **38371084** |
| High-temperature version | | **39371080** | **39371082** | **39371084** |
| Min./max. ambient temperature | [°C] | -10/130 | -10/130 | -10/130 |
| Force intensified version | | **PGN-plus 40-KVZ** | **PGN-plus 40-AS-KVZ** | **PGN-plus 40-IS-KVZ** |
| ID | | **0372098** | **0372398** | **0372458** |
| Closing force | [N] | 225 | 265 | |
| Opening force | [N] | 235 | | 285 |
| Weight | [kg] | 0.11 | 0.13 | 0.13 |
| Maximum pressure | [bar] | 8 | 6 | 6 |
| Max. permitted finger length | [mm] | 50 | 50 | 50 |
| Precision version | | **0371120** | **0371420** | |

## Main view

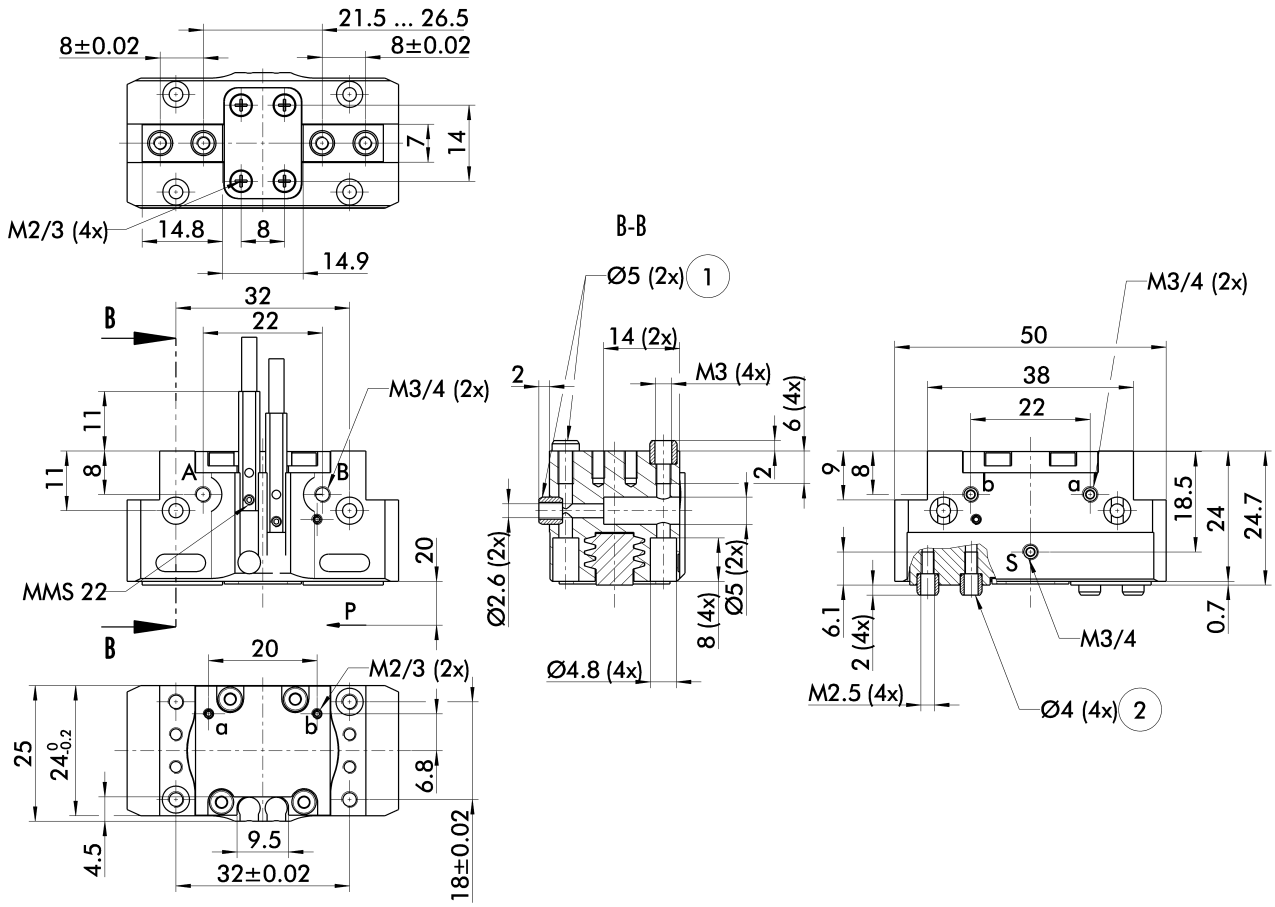


The drawing shows the gripper in the basic version with closed jaws, the dimensions do not include the options described below.

ⓘ The SDV-P pressure maintenance valve can also be used for I.D. or O.D. gripping alternatively or in addition to the spring-loaded, mechanical gripping force maintenance device (see "Accessories" catalog section).

A, a Main/direct connection, gripper opening
B, b Main/direct connection, gripper closing
S Air purge connection, or deaeration bore

① Gripper connection
② Finger connection

## Hose-free direct connection

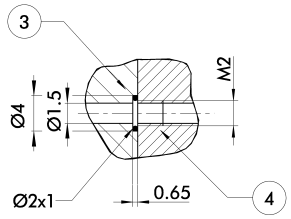


③ Adapter
④ Gripper

The direct connection is used for supplying compressed air without hoses. Instead, the pressure medium is fed through bore-holes in the mounting plate.

## AS/IS gripping force maintenance device

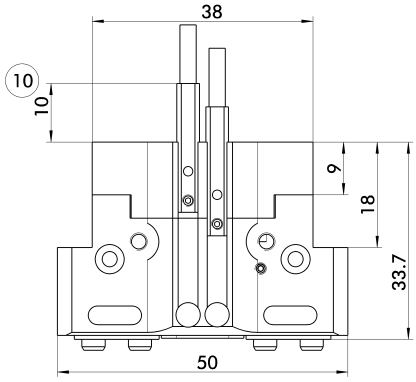


⑩ Projection applies only for AS version

The mechanical gripping force maintenance device ensures a minimum gripping force even in case of pressure drop. This acts as closing force in the AS version, and as opening force in the IS version. In addition, the gripping force maintenance device can also be used for increasing the gripping force or for single-acting gripping.

## Dust-protection version

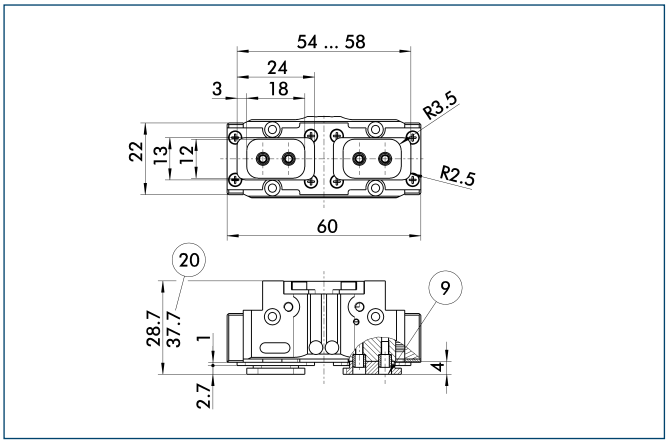


⑨ For mounting screw connection diagram, see basic version ⑳ For AS / IS version

The "dust-protection" option increases the degree of protection against penetrating substances. The screw connection diagram shifts by the height of the intermediate jaw. The finger length is still measured from the upper edge of the gripper housing.

## Force intensified version

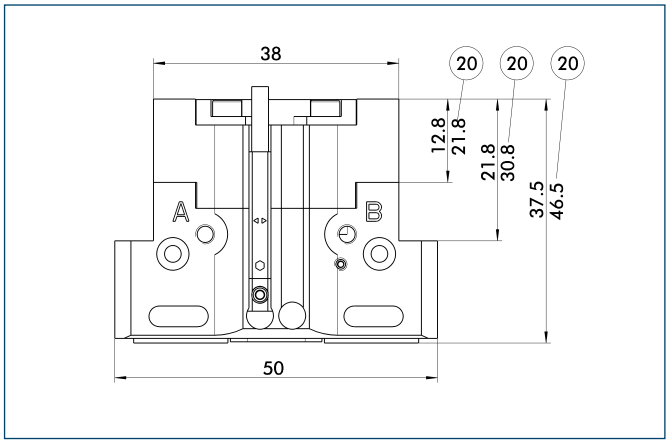


⑳ For AS / IS version

The KVZ cylinder increases the gripping forces during opening and closing. A second, in series-connected piston also increases the force on the wedge hook. The full gripping force shown in the data table is sometimes only reached after a few hundred gripping cycles. Please consider that grippers which are equipped with a gripping force maintenance device (AS / IS) are higher.

## Precision version

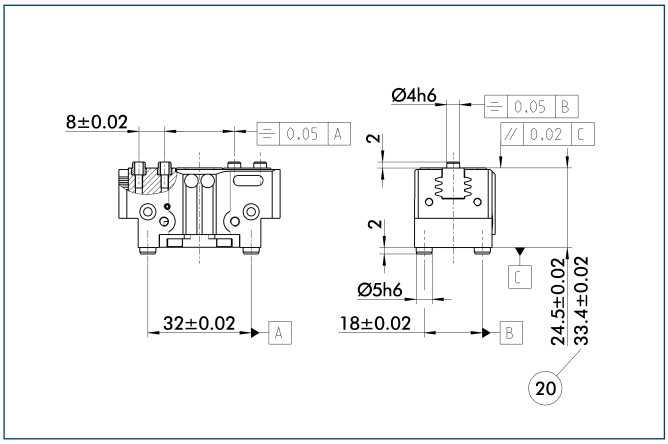


⑳ For AS / IS version

The indicated tolerances just refer to the types of precision versions shown in the chart of technical specifications. All other types of precision versions are available on request.

## Modular Assembly Automation

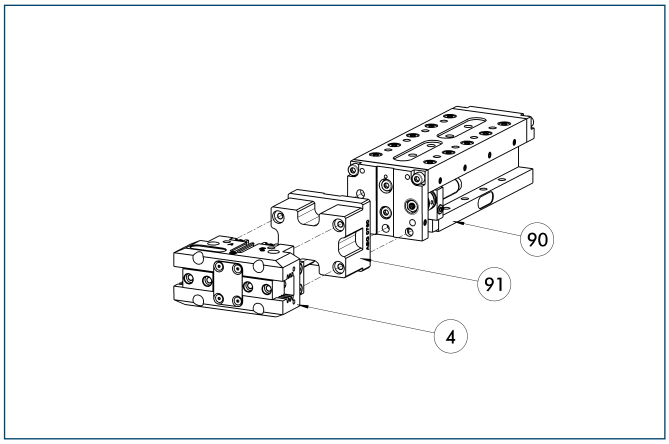


④ Gripper
⑨① ASG
⑨⓪ CLM

This gripper can be combined with the standard linear modules LM, KLM, CLM and ELM of the GEMOTEC modular system. For more information see our main catalog "Modular Assembly Automation".

## Maximum permitted finger projection

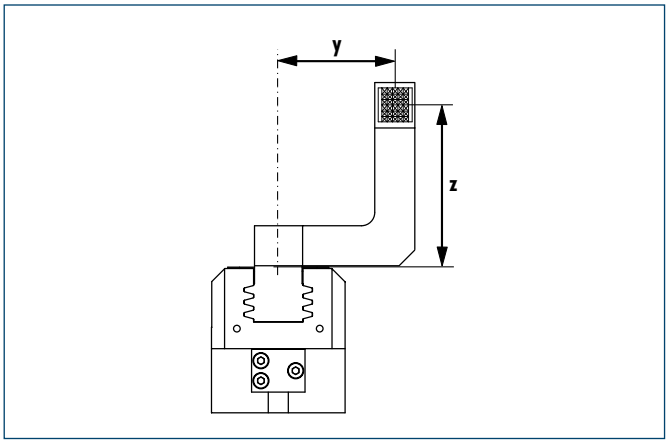


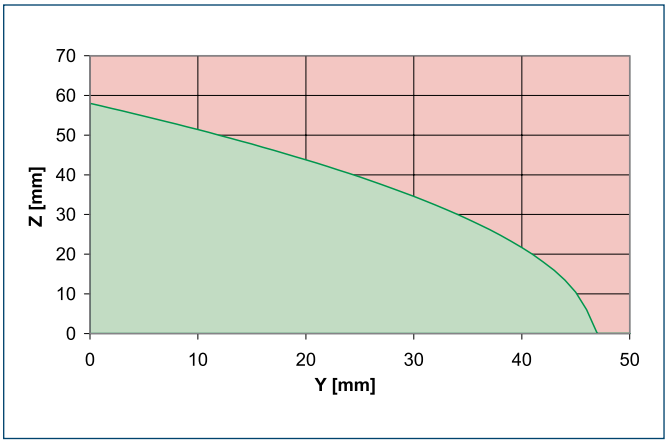


Permitted range
Inadmissible range

The curve applies to the basic version (stroke -1). For other versions, the curve will be parallel but offset in line with the max. permitted finger length.

## Protection cover

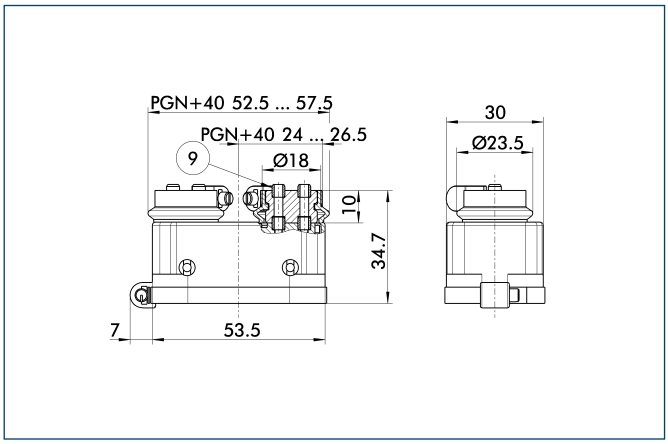


⑨ For mounting screw connection diagram, see basic version

The HUE protective cover completely protects the gripper against external influences up to IP65 if an additional sealing of the cover bottom is provided as part of the application. The mounting diagram shifts by the height of the intermediate jaw.

| Description | ID | Cleanroom class ISO-classification 14644-1 |
|---|---|---|
| Protection cover | | |
| HUE PGN-plus 40 | **0371490** | 2 |

## Universal intermediate jaw

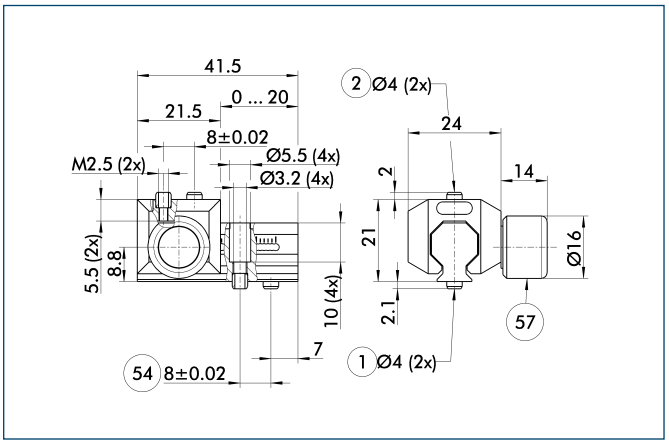


① Gripper connection
② Finger connection
⑭ Optional right or left connection
⑰ Locking

The universal intermediate jaw allows fast tool-free and reliable plugging and shifting of top jaws at the gripper.

| Description | ID | Grid dimension |
|---|---|---|
| Universal intermediate jaw | | |
| UZB 40 | **0300040** | 1 mm |

ⓘ The slide UZB-S can be removed completely and has to be ordered separately. Moreover, it allows a fast jaw change.

You can find more detailed information and individual parts of the above-mentioned accessories in the “Accessories” catalog section.

## Finger blanks

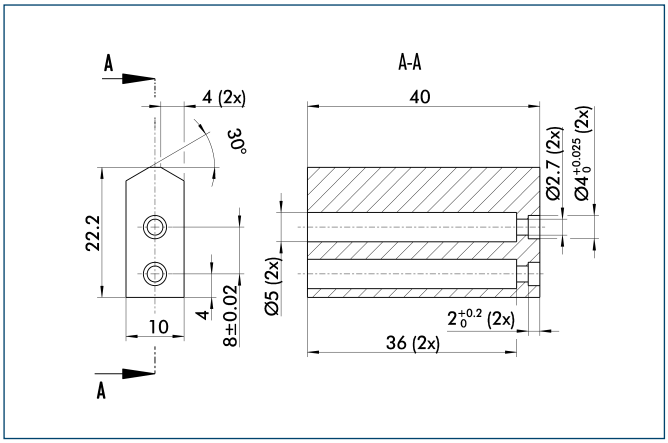


Finger blanks for customized subsequent machining

| Description | ID | Material | Scope of delivery |
|---|---|---|---|
| Finger blanks | | | |
| ABR-plus 40 | **0300008** | Aluminum | 1 |
| SBR-plus 40 | **0300018** | 16 MnCr 5 | 1 |

## Compensation unit with spring reset

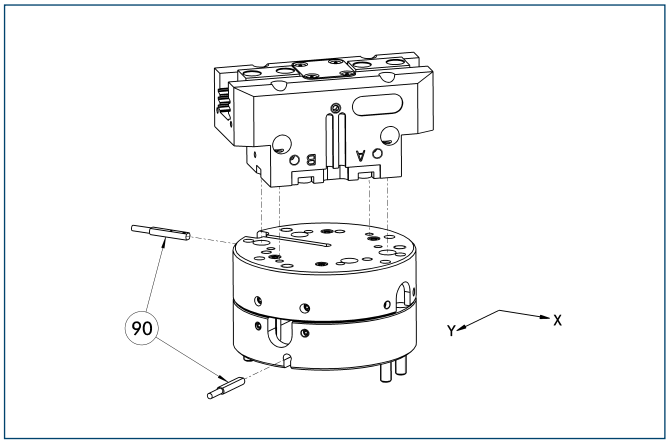


(90) Monitoring

Grippers can be directly mounted without using an adapter plate. For details see our catalog “Robot Accessories”.

| Description | ID | Compensation travel | Reset force |
|---|---|---|---|
| Compensation unit | | | |
| AGE-F-XY-031-1 | **0324900** | ±1.5 mm | 1 N |
| AGE-F-XY-031-2 | **0324901** | ±1.5 mm | 2.5 N |
| AGE-F-XY-031-3 | **0324902** | ±1.5 mm | 3.3 kN |

## Attachment valves

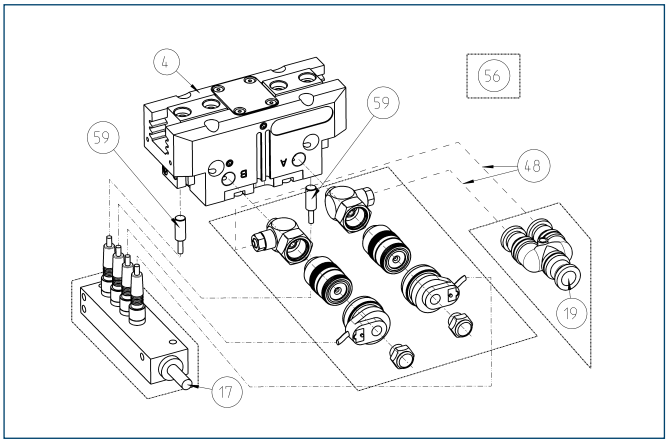


(4) Gripper
(17) Cable outlet
(19) Air connection
(48) Hose
(56) Included in delivery
(59) Monitoring “gripping”

For each gripper one attachment valve ABV is required, optional with distributor for sensors and valves. Attachment valves increase the efficiency, reduce the installation work and air consumption and simplify air supply. For details please refer to the “Accessories” catalog section.

| Description | ID |
|---|---|
| Attachment valves | |
| ABV-MV15-M3 | **0303322** |
| ABV-MV15-M3-V2-M8 | **0303384** |
| ABV-MV15-M3-V4-M8 | **0303354** |
| ABV-MV15-M3-V8-M8 | **0303355** |

## Programmable magnetic switch

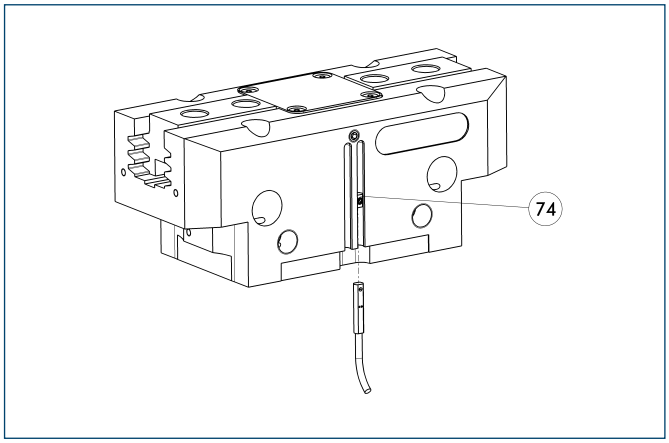


(74) Stop for MMS-P

Position monitoring with two programmable positions per sensor. The end position monitoring is mounted in the C-slot.

| Description | ID | Recommended product |
|---|---|---|
| Programmable magnetic switch | | |
| MMS-P 22-S-M8-PNP | **0301370** | • |
| MMSK-P 22-S-PNP | **0301371** | |
| Connection cables | | |
| KA BG08-L 4P-0500 | **0307767** | |
| KA BG08-L 4P-1000 | **0307768** | |
| KA BW08-L 4P-0500 | **0307765** | |
| KA BW08-L 4P-1000 | **0307766** | |
| Sensor Distributor | | |
| V2-M8-4P-2XM8-3P | **0301380** | |

ⓘ Please note the minimum permitted bending radii for the sensor cables, which are generally 35 mm.
ⓘ Per gripper one sensor (closer/NO) is required, optionally a cable extension.

You can find more detailed information and individual parts of the above-mentioned accessories in the “Accessories” catalog section.

## Electronic magnetic switches

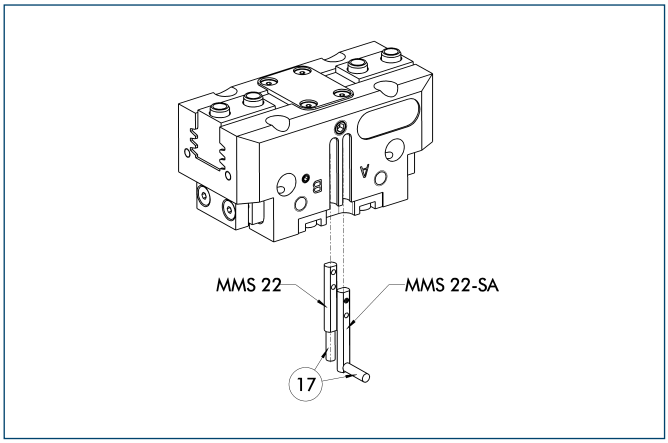


⑰ Cable outlet

End position monitoring for mounting in the C-slot

| Description | ID | Recommended product |
|---|---|---|
| Electronic magnetic switches | | |
| MMS 22-S-M5-PNP | **0301438** | |
| MMS 22-S-M5-NPN | **0301439** | |
| MMS 22-S-M8-PNP | **0301432** | • |
| MMS 22-S-M8-NPN | **0301433** | |
| MMSK 22-S-PNP | **0301434** | |
| MMSK 22-S-NPN | **0301435** | |
| Electronic magnetic switches with lateral cable outlet | | |
| MMS 22-S-M5-PNP-SA | **0301448** | |
| MMS 22-S-M5-NPN-SA | **0301449** | |
| MMS 22-S-M8-PNP-SA | **0301442** | • |
| MMS 22-S-M8-NPN-SA | **0301443** | |
| MMSK 22-S-PNP-SA | **0301444** | |
| MMSK 22-S-NPN-SA | **0301445** | |
| Connection cables | | |
| KA BG05-L 3P-0300 | **0301652** | |
| KA BG08-L 3P-0300-PNP | **0301622** | |
| KA BG08-L 3P-0500-PNP | **0301623** | |
| KA BW05-L 3P-0300 | **0301650** | |
| KA BW08-L 3P-0300-NPN | **0301602** | |
| KA BW08-L 3P-0300-PNP | **0301594** | |
| KA BW08-L 3P-0500-NPN | **9641116** | |
| KA BW08-L 3P-0500-PNP | **0301502** | |
| Cable extensions | | |
| KV BW08-SG08 3P-0030-PNP | **0301495** | |
| KV BW08-SG08 3P-0100-PNP | **0301496** | |
| KV BW08-SG08 3P-0200-PNP | **0301497** | |

ⓘ Two sensors (closer/NO) are required for each gripper, plus extension cables as an option.

ⓘ Please note the minimum permitted bending radii for the sensor cables, which are generally 35 mm.

You can find more detailed information and individual parts of the above-mentioned accessories in the “Accessories” catalog section.

# PGN-plus 50

**Pneumatic • 2-Finger Parallel Gripper • Universal Gripper**



## Gripping force, I.D. gripping

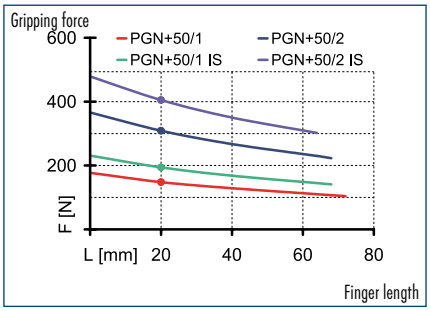


## Gripping force, O.D. gripping

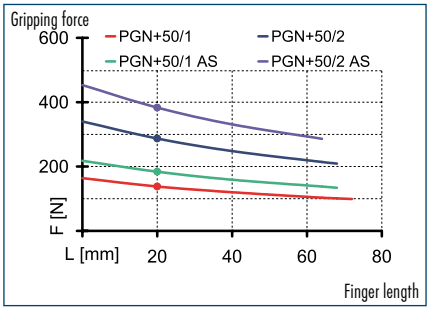


## Finger load

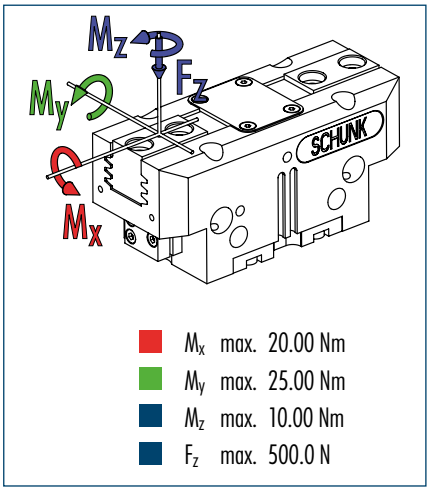


- $M_x$ max. 20.00 Nm
- $M_y$ max. 25.00 Nm
- $M_z$ max. 10.00 Nm
- $F_z$ max. 500.0 N

ⓘ The indicated moments and forces are static values, apply per base jaw and may occur simultaneously. $M_y$ may arise in addition to the moment generated by the gripping force itself. If the max. permitted finger weight is exceeded, it is imperative to throttle the air pressure so that the jaw movement occurs without any hitting or bouncing. Service life may be reduced.

## Technical data

| Description | | PGN-plus 50-1 | PGN-plus 50-2 | PGN-plus 50-1-AS | PGN-plus 50-2-AS | PGN-plus 50-1-IS | PGN-plus 50-2-IS |
|---|---|---|---|---|---|---|---|
| **ID** | | **0371099** | **0371149** | **0371399** | **0371449** | **0371459** | **0371469** |
| Stroke per finger | [mm] | 4 | 2 | 4 | 2 | 4 | 2 |
| Closing force | [N] | 140 | 290 | 185 | 385 | | |
| Opening force | [N] | 145 | 310 | | | 190 | 405 |
| Min. spring force | [N] | | | 45 | 95 | 45 | 95 |
| Weight | [kg] | 0.17 | 0.17 | 0.21 | 0.21 | 0.21 | 0.21 |
| Recommended workpiece weight | [kg] | 0.7 | 1.45 | 0.7 | 1.45 | 0.7 | 1.45 |
| Air consumption per double stroke | [cm³] | 5 | 5 | 12 | 12 | 5 | 12 |
| Min./max. operating pressure | [bar] | 2.5/8 | 2.5/8 | 4/6.5 | 4/6.5 | 4/6.5 | 4/6.5 |
| Nominal operating pressure | [bar] | 6 | 6 | 6 | 6 | 6 | 6 |
| Closing/opening time | [s] | 0.02/0.02 | 0.02/0.02 | 0.02/0.03 | 0.02/0.03 | 0.03/0.02 | 0.03/0.02 |
| Max. permitted finger length | [mm] | 72 | 68 | 68 | 68 | 64 | 64 |
| Max. permitted weight per finger | [kg] | 0.18 | 0.18 | 0.18 | 0.18 | 0.18 | 0.18 |
| IP class | | 40 | 40 | 40 | 40 | 40 | 40 |
| Min./max. ambient temperature | [°C] | -10/90 | -10/90 | -10/90 | -10/90 | -10/90 | -10/90 |
| Repeat accuracy | [mm] | 0.01 | 0.01 | 0.01 | 0.01 | 0.01 | 0.01 |
| Cleanroom class ISO-classification 14644-1 | | 5 | 5 | 5 | 5 | 5 | 5 |
| **OPTIONS and their characteristics** | | | | | | | |
| Dust-protection version | | **37371099** | **37371149** | **37371399** | **37371449** | **37371459** | **37371469** |
| IP class | | 64 | 64 | 64 | 64 | 64 | 64 |
| Weight | [kg] | 0.2 | 0.2 | 0.24 | 0.24 | 0.24 | 0.24 |
| Anti-corrosion version | | **38371099** | **38371149** | **38371399** | **38371449** | **38371459** | **38371469** |
| High-temperature version | | **39371099** | **39371149** | **39371399** | **39371449** | **39371459** | **39371469** |
| Min./max. ambient temperature | [°C] | -10/130 | -10/130 | -10/130 | -10/130 | -10/130 | -10/130 |
| Force intensified version | | PGN-plus 50-1-KVZ | PGN-plus 50-2-KVZ | PGN-plus 50-1-AS-KVZ | | PGN-plus 50-1-IS-KVZ | |
| ID | | **0372099** | **0372149** | **0372399** | | **0372459** | |
| Closing force | [N] | 250 | 520 | 295 | | | |
| Opening force | [N] | 260 | 560 | | | 305 | |
| Weight | [kg] | 0.21 | 0.21 | 0.26 | | 0.26 | |
| Maximum pressure | [bar] | 6 | 6 | 6 | | 6 | |
| Max. permitted finger length | [mm] | 64 | 50 | 50 | | 50 | |
| Precision version | | **0371121** | **0371171** | **0371421** | **0371436** | | |

## Main view

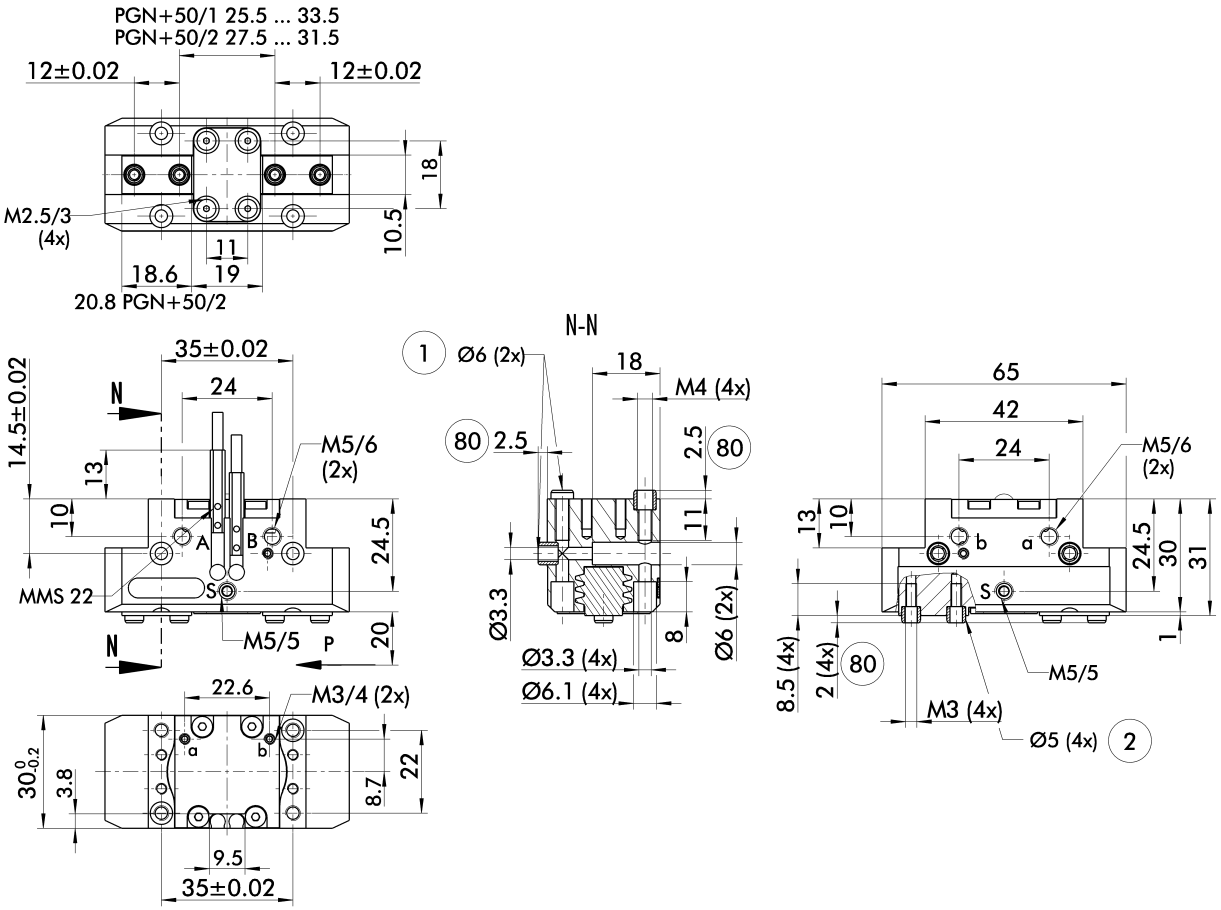


The drawing shows the gripper in the basic version with closed jaws, the dimensions do not include the options described below.

ⓘ The SDV-P pressure maintenance valve can also be used for I.D. or O.D. gripping alternatively or in addition to the spring-loaded, mechanical gripping force maintenance device (see "Accessories" catalog section).

A, a Main/direct connection, gripper opening
B, b Main/direct connection, gripper closing
S Air purge connection, or deaeration bore
① Gripper connection
② Finger connection
80 Depth of the centering sleeve hole in the matching part

## Hose-free direct connection

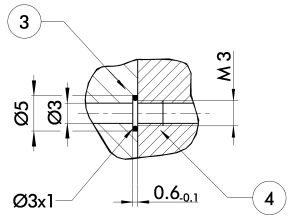


③ Adapter
④ Gripper

The direct connection is used for supplying compressed air without hoses. Instead, the pressure medium is fed through bore-holes in the mounting plate.

## AS/IS gripping force maintenance device

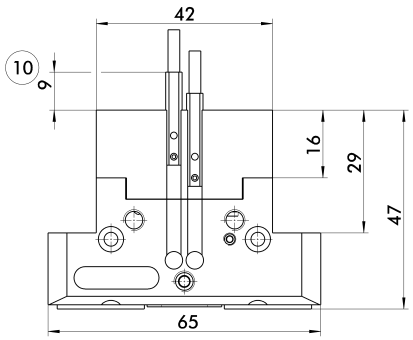


⑩ Projection applies only for AS version

The mechanical gripping force maintenance device ensures a minimum gripping force even in case of pressure drop. This acts as closing force in the AS version, and as opening force in the IS version. In addition, the gripping force maintenance device can also be used for increasing the gripping force or for single-acting gripping.

## Dust-protection version

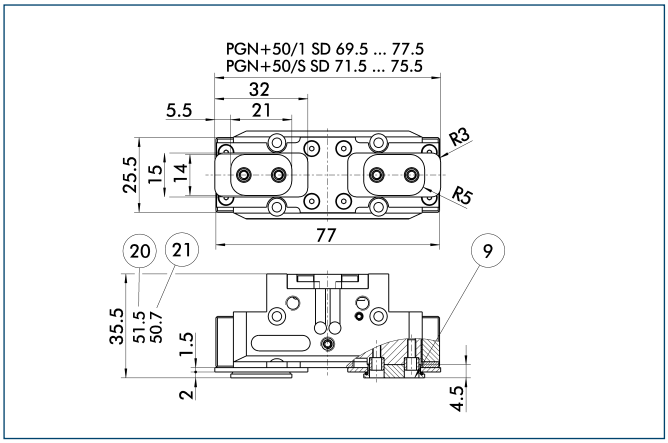


(9) For mounting screw connection diagram, see basic version
(21) Applies for KVZ version
(20) For AS / IS version

The "dust-protection" option increases the degree of protection against penetrating substances. The screw connection diagram shifts by the height of the intermediate jaw. The finger length is still measured from the upper edge of the gripper housing.

## Force intensified version

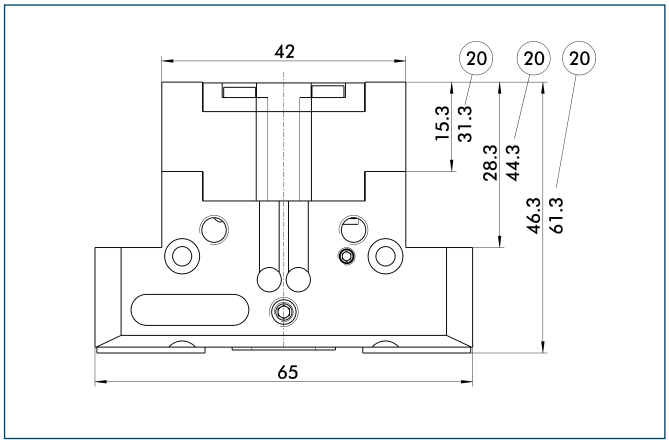


(20) For AS / IS version

The KVZ cylinder increases the gripping forces during opening and closing. A second, in series-connected piston also increases the force on the wedge hook. The full gripping force shown in the data table is sometimes only reached after a few hundred gripping cycles. Please consider that grippers which are equipped with a gripping force maintenance device (AS / IS) are higher.

## Precision version

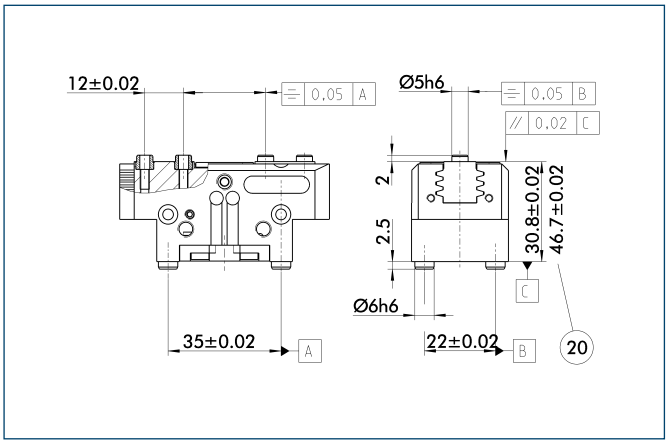


(20) For AS / IS version

The indicated tolerances just refer to the types of precision versions shown in the chart of technical specifications. All other types of precision versions are available on request.

## Modular Assembly Automation

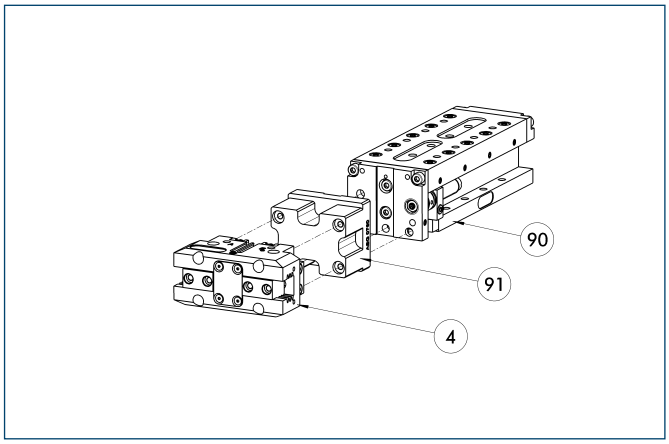


(4) Gripper
(90) CLM
(91) ASG

This gripper can be combined with the standard linear modules LM, KLM, CLM and ELM of the GEMOTEC modular system. For more information see our main catalog "Modular Assembly Automation".

## Maximum permitted finger projection

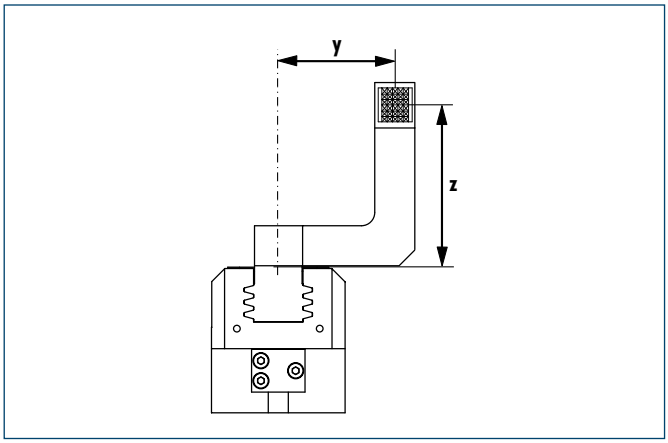


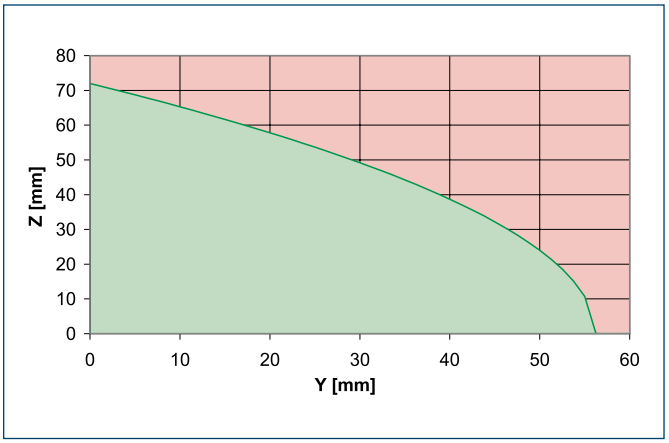


Permitted range
Inadmissible range

The curve applies to the basic version (stroke -1). For other versions, the curve will be parallel but offset in line with the max. permitted finger length.

## Protection cover

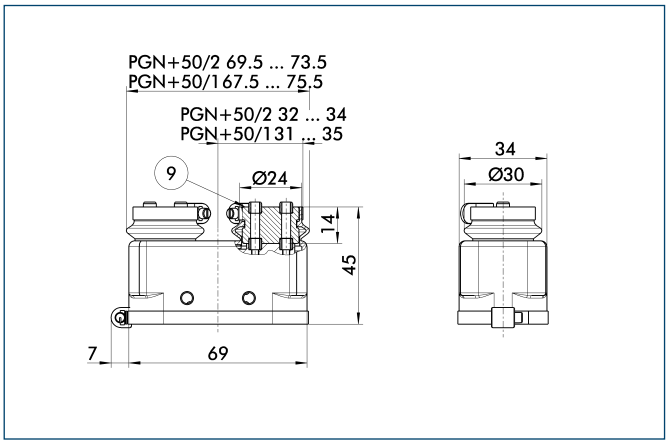


⑨ For mounting screw connection diagram, see basic version

The HUE protective cover completely protects the gripper against external influences up to IP65 if an additional sealing of the cover bottom is provided as part of the application. The mounting diagram shifts by the height of the intermediate jaw.

| Description | ID | Cleanroom class ISO-classification 14644-1 |
|---|---|---|
| Protection cover | | |
| HUE PGN-plus 50 | **0371479** | 2 |

## Quick-change Jaw System

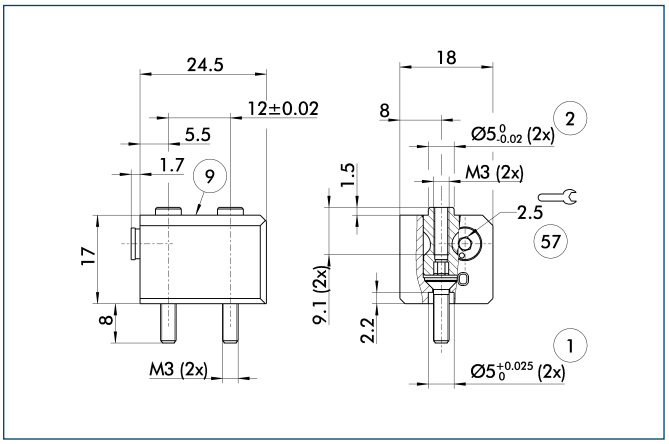


① Gripper connection
② Finger connection
⑨ For mounting screw connection diagram, see basic version
57 Locking

The BSWS quick-change jaw system enables top jaws to be changed on the gripper manually and rapidly. An adapter (BSWS-A) and a base (BSWS-B) are required for each gripper jaw.
For a reverse assembly without height set-up, one adapter (BSWS-A) and a kit (BSWS-U) per gripper jaw are required. Another effect of the BSWS-U is, that there are no disturbing fastening bores in the finger contour.

| Description | ID |
|---|---|
| Quick-change Jaw System adapter | |
| BSWS-A 50 | **0303020** |
| Quick-change Jaw System base | |
| BSWS-B 50 | **0303021** |
| Quick-change Jaw System reversed | |
| BSWS-U 50 | **0303040** |

You can find more detailed information and individual parts of the above-mentioned accessories in the “Accessories” catalog section.

## Universal intermediate jaw

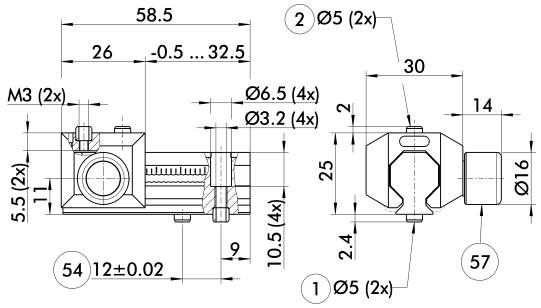


① Gripper connection
② Finger connection
54 Optional right or left connection
57 Locking

The universal intermediate jaw allows fast tool-free and reliable plugging and shifting of top jaws at the gripper.

| Description | ID | Grid dimension |
|---|---|---|
| Universal intermediate jaw | | |
| UZB 50 | **0300041** | 1.5 mm |

ⓘ The slide UZB-S can be removed completely and has to be ordered separately. Moreover, it allows a fast jaw change.

## Force measuring jaws

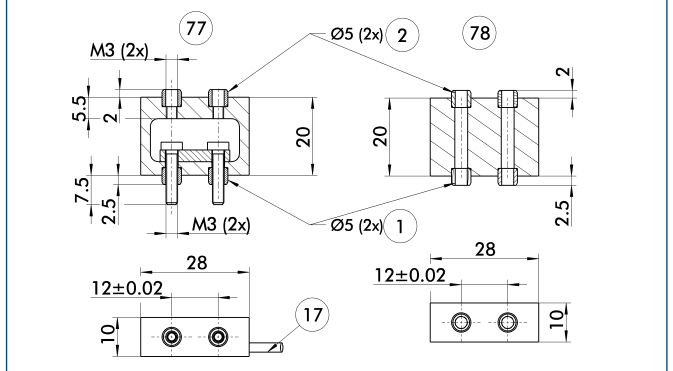


① Gripper connection
② Finger connection
17 Cable outlet
77 Active intermediate jaws
78 Passive intermediate jaws

Force measuring jaws measure gripping forces, but can also determine workpiece weights or dimensional deviations. There are active and passive intermediate jaws (FMS-ZBA or FMS-ZBP). At least one active force measuring jaw is required per gripper, the rest can be passive. For each active jaw, a FMS-A1 control unit and a FMS-A connection cable are required.

| Description | ID |
|---|---|
| Active intermediate jaws | |
| FMS-ZBA 50 | **0301830** |
| Passive intermediate jaws | |
| FMS-ZBP 50 | **0301831** |
| Electronic Processor | |
| FMS-A1 | **0301810** |
| Connection cables | |
| FMS-AK0200 | **0301820** |
| FMS-AK0500 | **0301821** |
| FMS-AK1000 | **0301822** |
| FMS-AK2000 | **0301823** |

## Finger blanks

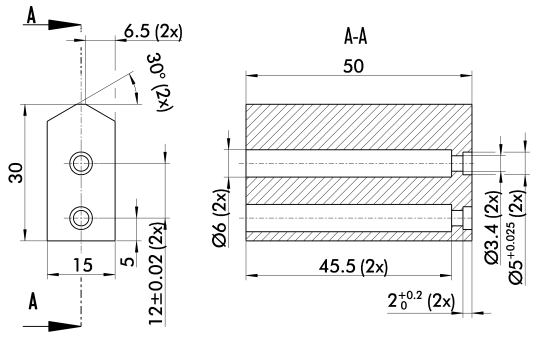


Finger blanks for customized subsequent machining

| Description | ID | Material | Scope of delivery |
|---|---|---|---|
| Finger blanks | | | |
| ABR-plus 50 | **0300009** | Aluminum | 1 |
| SBR-plus 50 | **0300019** | 16 MnCr 5 | 1 |

You can find more detailed information and individual parts of the above-mentioned accessories in the “Accessories” catalog section.

## Tolerance compensation unit

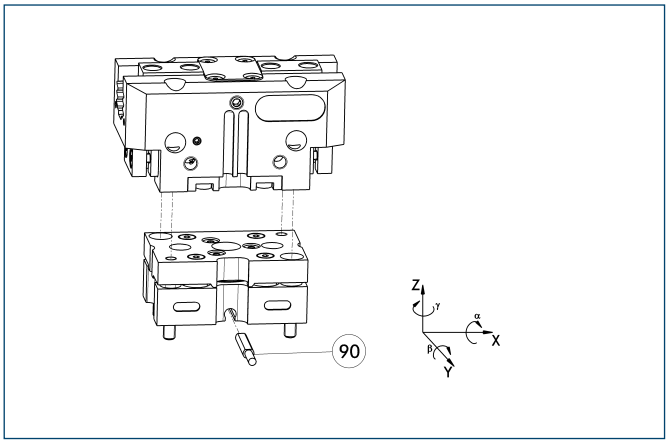


(90) Monitoring of locking

Grippers can be directly mounted without an adapter plate. Tolerance compensation unit and gripper have an identical screw connection diagram. Therefore the tolerance compensation units can be assembled later. Please consider the additional assembly height of the tolerance compensation unit. For details see catalog “Robot Accessories”.

| Description | ID | Locking | Deflection |
|---|---|---|---|
| Compensation unit | | | |
| TCU-050-3-OV-P | **0324757** | No | ±0°/±1°/±0° |

## Compensation unit with spring reset

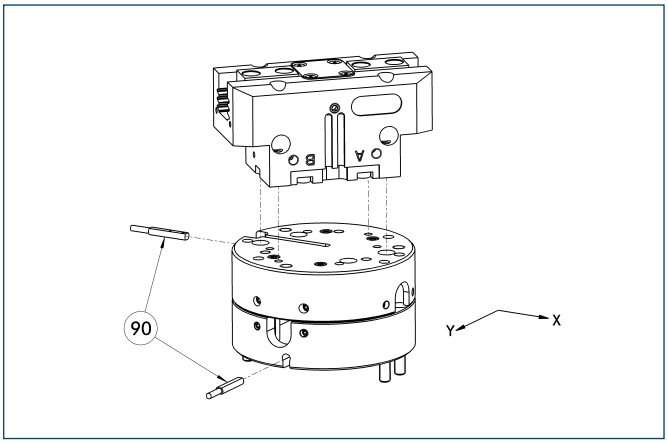


(90) Monitoring

Grippers can be directly mounted without using an adapter plate. For details see our catalog “Robot Accessories”.

| Description | ID | Compensation travel | Reset force |
|---|---|---|---|
| Compensation unit | | | |
| AGE-F-XY-040-1 | **0324920** | ±2 mm | 1 N |
| AGE-F-XY-040-2 | **0324921** | ±2 mm | 2.5 N |
| AGE-F-XY-040-3 | **0324922** | ±2 mm | 3.3 N |

## Attachment valves

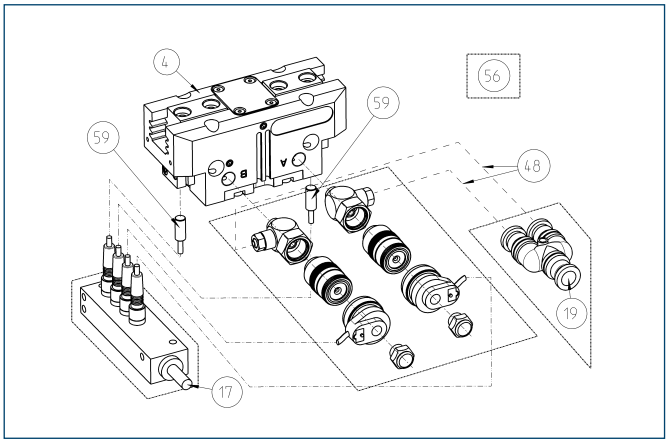


(4) Gripper
(17) Cable outlet
(19) Air connection
(48) Hose
(56) Included in delivery
(59) Monitoring “gripping”

For each gripper one attachment valve ABV is required, optional with distributor for sensors and valves. Attachment valves increase the efficiency, reduce the installation work and air consumption and simplify air supply. For details please refer to the “Accessories” catalog section.

| Description | ID |
|---|---|
| Attachment valves | |
| ABV-MV15-M5 | **0303323** |
| ABV-MV15-M5-V2-M8 | **0303386** |
| ABV-MV15-M5-V4-M8 | **0303356** |
| ABV-MV15-M5-V8-M8 | **0303357** |

## Programmable magnetic switch

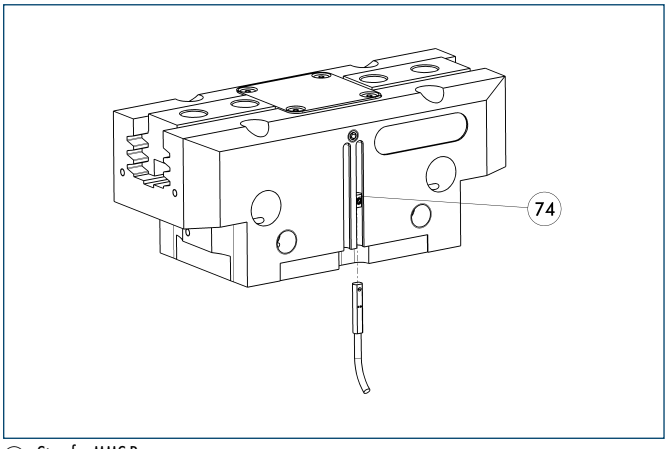


(74) Stop for MMS-P

Position monitoring with two programmable positions per sensor. The end position monitoring is mounted in the C-slot.

| Description | ID | Recommended product |
|---|---|---|
| Programmable magnetic switch | | |
| MMS-P 22-S-M8-PNP | **0301370** | • |
| MMSK-P 22-S-PNP | **0301371** | |
| Connection cables | | |
| KA BG08-L 4P-0500 | **0307767** | |
| KA BG08-L 4P-1000 | **0307768** | |
| KA BW08-L 4P-0500 | **0307765** | |
| KA BW08-L 4P-1000 | **0307766** | |
| Sensor Distributor | | |
| V2-M8-4P-2XM8-3P | **0301380** | |

ⓘ Please note the minimum permitted bending radii for the sensor cables, which are generally 35 mm.
ⓘ Per gripper one sensor (closer/NO) is required, optionally a cable extension.

You can find more detailed information and individual parts of the above-mentioned accessories in the “Accessories” catalog section.

## Electronic magnetic switches

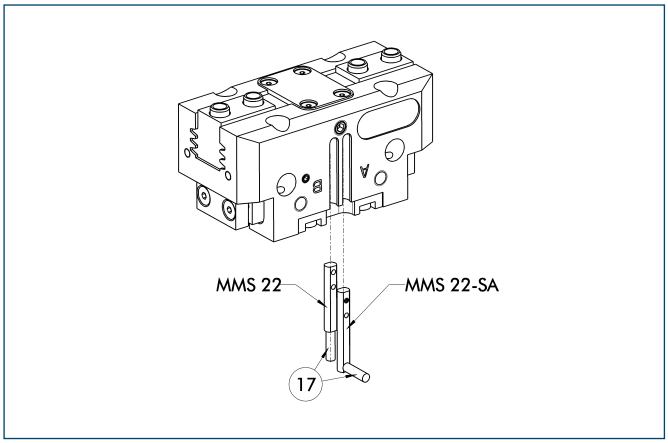


⑰ Cable outlet

End position monitoring for mounting in the C-slot

| Description | ID | Recommended product |
|---|---|---|
| Electronic magnetic switches | | |
| MMS 22-S-M5-PNP | **0301438** | |
| MMS 22-S-M5-NPN | **0301439** | |
| MMS 22-S-M8-PNP | **0301432** | • |
| MMS 22-S-M8-NPN | **0301433** | |
| MMSK 22-S-PNP | **0301434** | |
| MMSK 22-S-NPN | **0301435** | |
| Electronic magnetic switches with lateral cable outlet | | |
| MMS 22-S-M5-PNP-SA | **0301448** | |
| MMS 22-S-M5-NPN-SA | **0301449** | |
| MMS 22-S-M8-PNP-SA | **0301442** | • |
| MMS 22-S-M8-NPN-SA | **0301443** | |
| MMSK 22-S-PNP-SA | **0301444** | |
| MMSK 22-S-NPN-SA | **0301445** | |
| Connection cables | | |
| KA BG05-L 3P-0300 | **0301652** | |
| KA BG08-L 3P-0300-PNP | **0301622** | |
| KA BG08-L 3P-0500-PNP | **0301623** | |
| KA BW05-L 3P-0300 | **0301650** | |
| KA BW08-L 3P-0300-NPN | **0301602** | |
| KA BW08-L 3P-0300-PNP | **0301594** | |
| KA BW08-L 3P-0500-NPN | **9641116** | |
| KA BW08-L 3P-0500-PNP | **0301502** | |
| Cable extensions | | |
| KV BW08-SG08 3P-0030-PNP | **0301495** | |
| KV BW08-SG08 3P-0100-PNP | **0301496** | |
| KV BW08-SG08 3P-0200-PNP | **0301497** | |

ⓘ Two sensors (closer/NO) are required for each gripper, plus extension cables as an option.

ⓘ Please note the minimum permitted bending radii for the sensor cables, which are generally 35 mm.

You can find more detailed information and individual parts of the above-mentioned accessories in the “Accessories” catalog section.

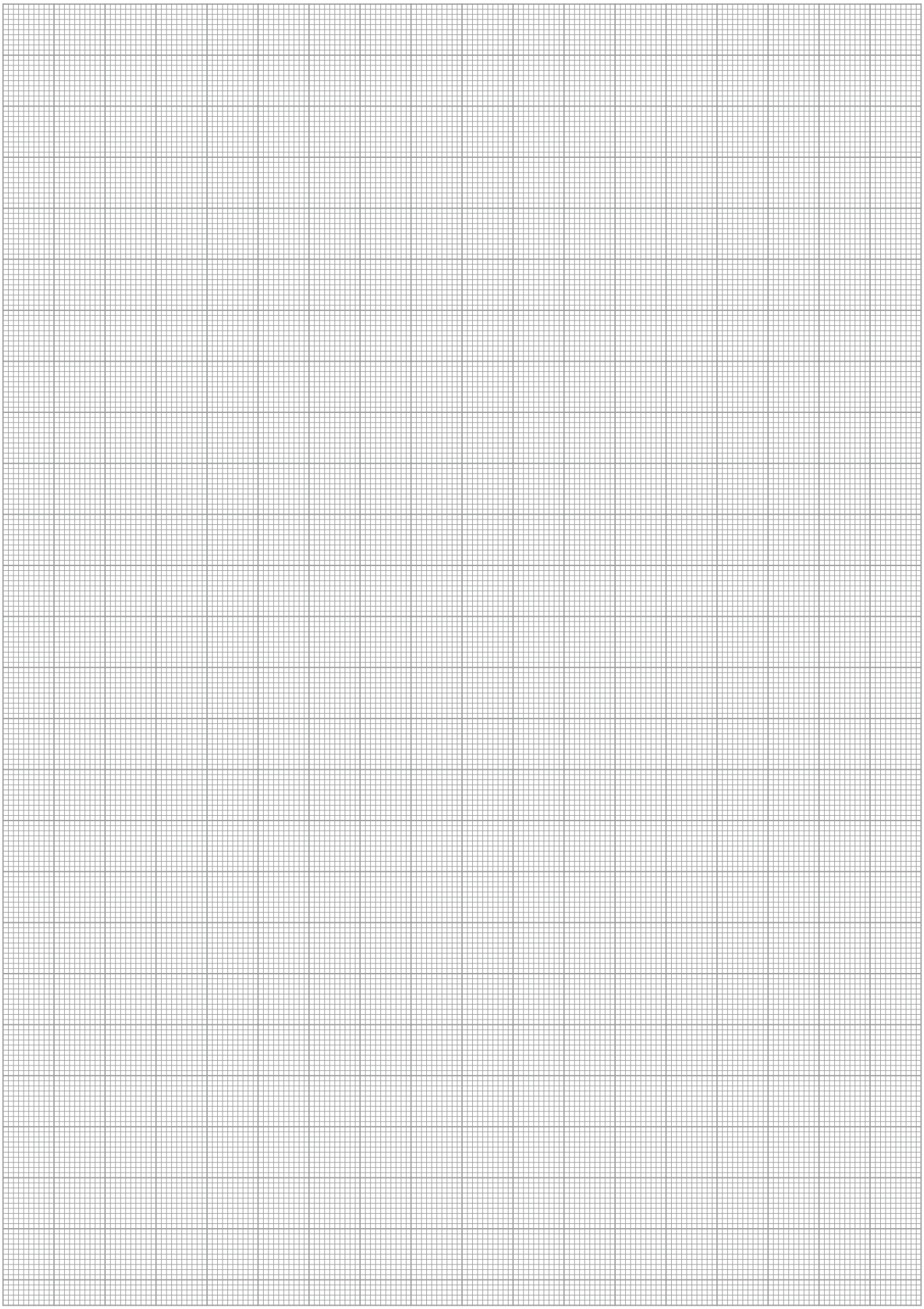

# PGN-plus 64

**Pneumatic • 2-Finger Parallel Gripper • Universal Gripper**



## Gripping force, I.D. gripping

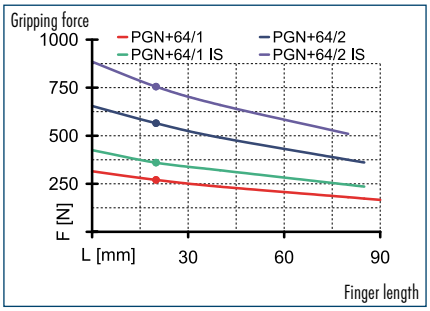


## Gripping force, O.D. gripping

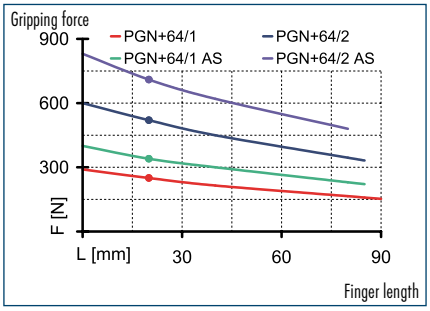


## Finger load

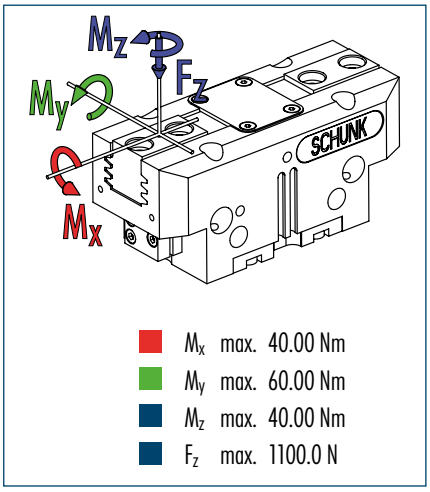


- $M_x$ max. 40.00 Nm
- $M_y$ max. 60.00 Nm
- $M_z$ max. 40.00 Nm
- $F_z$ max. 1100.0 N

ⓘ The indicated moments and forces are static values, apply per base jaw and may occur simultaneously. $M_y$ may arise in addition to the moment generated by the gripping force itself. If the max. permitted finger weight is exceeded, it is imperative to throttle the air pressure so that the jaw movement occurs without any hitting or bouncing. Service life may be reduced.

## Technical data

| Description | | PGN-plus 64-1 | PGN-plus 64-2 | PGN-plus 64-1-AS | PGN-plus 64-2-AS | PGN-plus 64-1-IS | PGN-plus 64-2-IS |
|---|---|---|---|---|---|---|---|
| **ID** | | **0371090** | **0371091** | **0371092** | **0371093** | **0371094** | **0371095** |
| Stroke per finger | [mm] | 6 | 3 | 6 | 3 | 6 | 3 |
| Closing force | [N] | 250 | 520 | 340 | 710 | | |
| Opening force | [N] | 270 | 565 | | | 360 | 755 |
| Min. spring force | [N] | | | 90 | 190 | 90 | 190 |
| Weight | [kg] | 0.28 | 0.28 | 0.37 | 0.37 | 0.37 | 0.37 |
| Recommended workpiece weight | [kg] | 1.25 | 2.6 | 1.25 | 2.6 | 1.25 | 2.6 |
| Air consumption per double stroke | [cm³] | 9 | 9 | 48 | 48 | 48 | 48 |
| Min./max. operating pressure | [bar] | 2.5/8 | 2.5/8 | 4/6.5 | 4/6.5 | 4/6.5 | 4/6.5 |
| Nominal operating pressure | [bar] | 6 | 6 | 6 | 6 | 6 | 6 |
| Closing/opening time | [s] | 0.03/0.03 | 0.03/0.03 | 0.02/0.04 | 0.02/0.04 | 0.04/0.02 | 0.04/0.02 |
| Max. permitted finger length | [mm] | 90 | 85 | 85 | 80 | 85 | 80 |
| Max. permitted weight per finger | [kg] | 0.35 | 0.35 | 0.35 | 0.35 | 0.35 | 0.35 |
| IP class | | 40 | 40 | 40 | 40 | 40 | 40 |
| Min./max. ambient temperature | [°C] | -10/90 | -10/90 | -10/90 | -10/90 | -10/90 | -10/90 |
| Repeat accuracy | [mm] | 0.01 | 0.01 | 0.01 | 0.01 | 0.01 | 0.01 |
| Cleanroom class ISO-classification 14644-1 | | 5 | 5 | 5 | 5 | 5 | 5 |
| **OPTIONS and their characteristics** | | | | | | | |
| Dust-protection version | | **37371090** | **37371091** | **37371092** | **37371093** | **37371094** | **37371095** |
| IP class | | 64 | 64 | 64 | 64 | 64 | 64 |
| Weight | [kg] | 0.35 | 0.35 | 0.44 | 0.44 | 0.44 | 0.44 |
| Anti-corrosion version | | **38371090** | **38371091** | **38371092** | **38371093** | **38371094** | **38371095** |
| High-temperature version | | **39371090** | **39371091** | **39371092** | **39371093** | **39371094** | **39371095** |
| Min./max. ambient temperature | [°C] | -10/130 | -10/130 | -10/130 | -10/130 | -10/130 | -10/130 |
| Force intensified version | | PGN-plus 64-1-KVZ | PGN-plus 64-2-KVZ | PGN-plus 64-1-AS-KVZ | | PGN-plus 64-1-IS-KVZ | |
| ID | | **0372090** | **0372091** | **0372092** | | **0372093** | |
| Closing force | [N] | 450 | 520 | 540 | | | |
| Opening force | [N] | 485 | 1015 | | | 575 | |
| Weight | [kg] | 0.35 | 0.35 | 0.43 | | 0.43 | |
| Maximum pressure | [bar] | 6 | 6 | 6 | | 6 | |
| Max. permitted finger length | [mm] | 80 | 64 | 64 | | 64 | |
| Precision version | | **0371122** | **0371172** | **0371422** | **0371437** | | |

## Main view

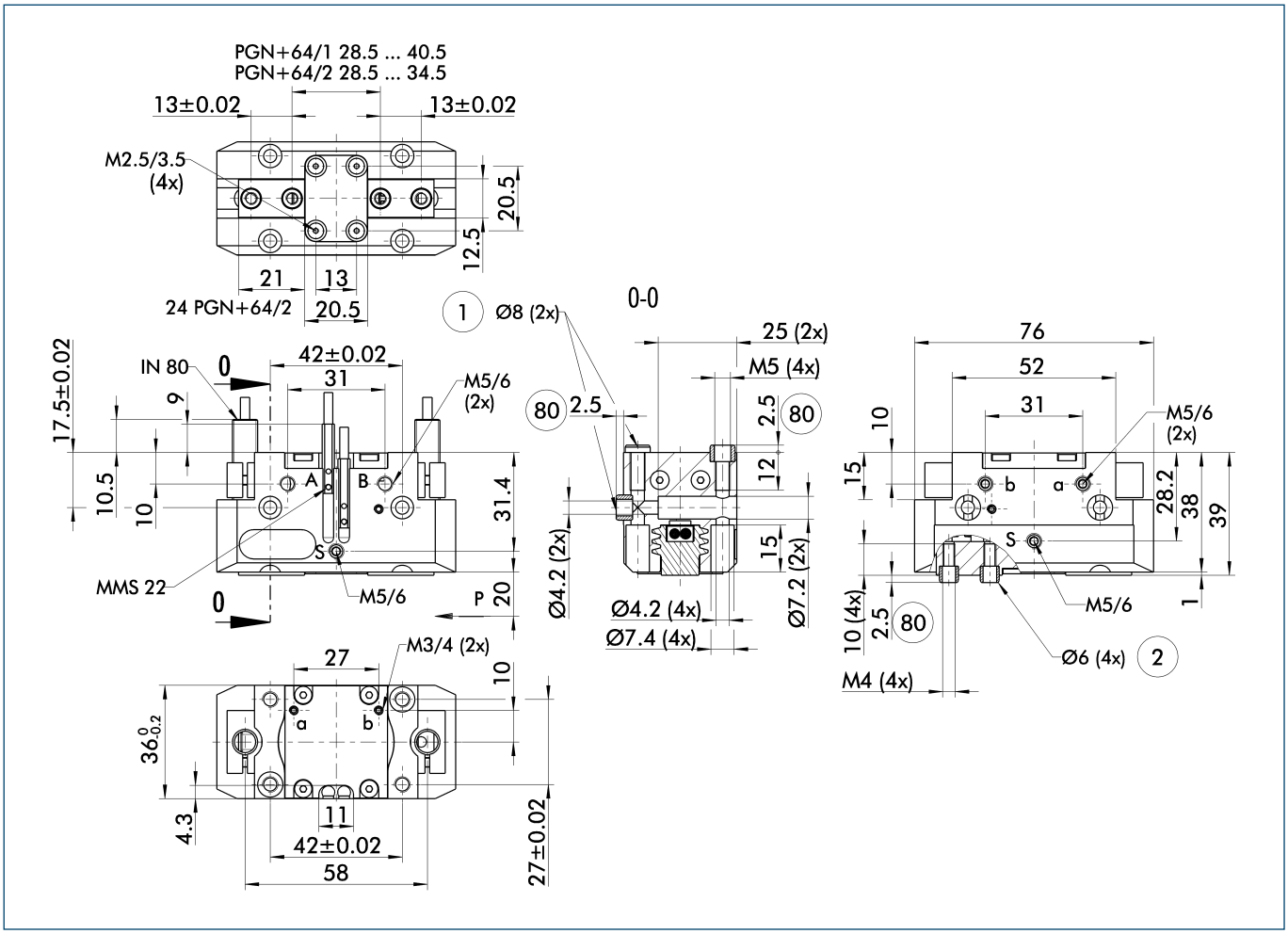


The drawing shows the gripper in the basic version with closed jaws, the dimensions do not include the options described below.

ⓘ The SDV-P pressure maintenance valve can also be used for I.D. or O.D. gripping alternatively or in addition to the spring-loaded, mechanical gripping force maintenance device (see "Accessories" catalog section).

A, a Main/direct connection, gripper opening
B, b Main/direct connection, gripper closing
S Air purge connection, or deaeration bore
① Gripper connection
② Finger connection
⑧⓪ Depth of the centering sleeve hole in the matching part

## Hose-free direct connection

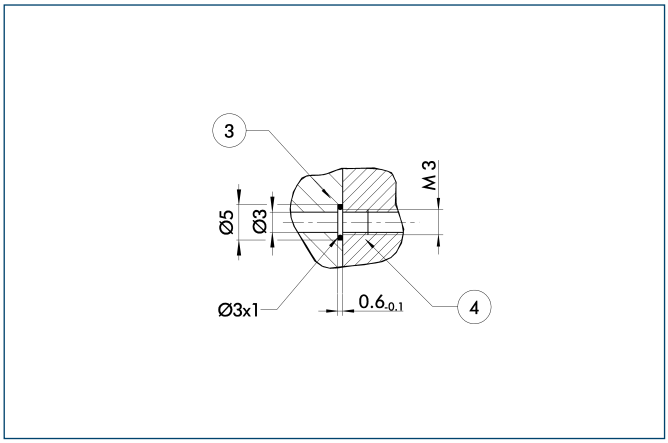


③ Adapter
④ Gripper

The direct connection is used for supplying compressed air without hoses. Instead, the pressure medium is fed through bore-holes in the mounting plate.

## AS/IS gripping force maintenance device

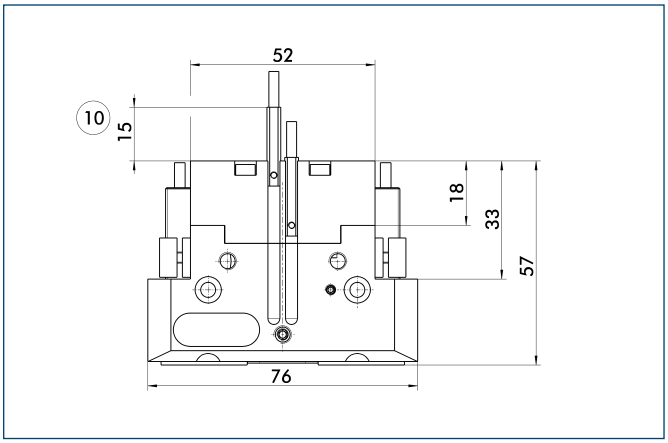


⑩ Projection applies only for AS version

The mechanical gripping force maintenance device ensures a minimum gripping force even in case of pressure drop. This acts as closing force in the AS version, and as opening force in the IS version. In addition, the gripping force maintenance device can also be used for increasing the gripping force or for single-acting gripping.

## Dust-protection version

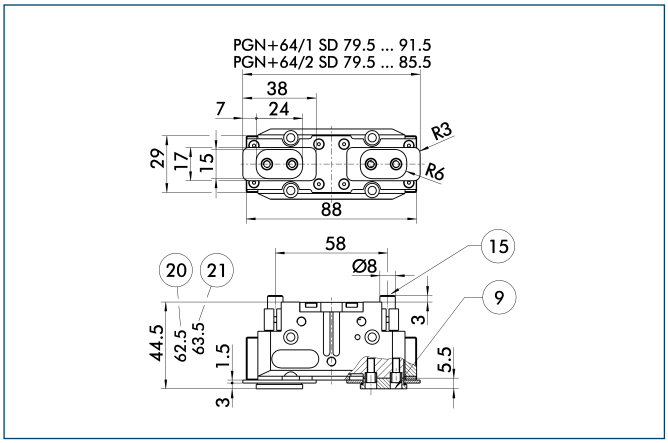


⑨ For mounting screw connection diagram, see basic version
⑮ Sealing bolt
⑳ For AS / IS version
㉑ Applies for KVZ version

The "dust-protection" option increases the degree of protection against penetrating substances. The screw connection diagram shifts by the height of the intermediate jaw. The finger length is still measured from the upper edge of the gripper housing.

## Force intensified version

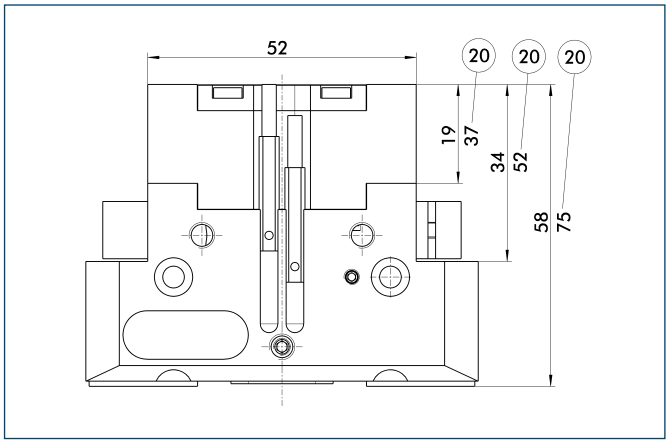


⑳ For AS / IS version

The KVZ cylinder increases the gripping forces during opening and closing. A second, in series-connected piston also increases the force on the wedge hook. The full gripping force shown in the data table is sometimes only reached after a few hundred gripping cycles. Please consider that grippers which are equipped with a gripping force maintenance device (AS / IS) are higher.

## Precision version

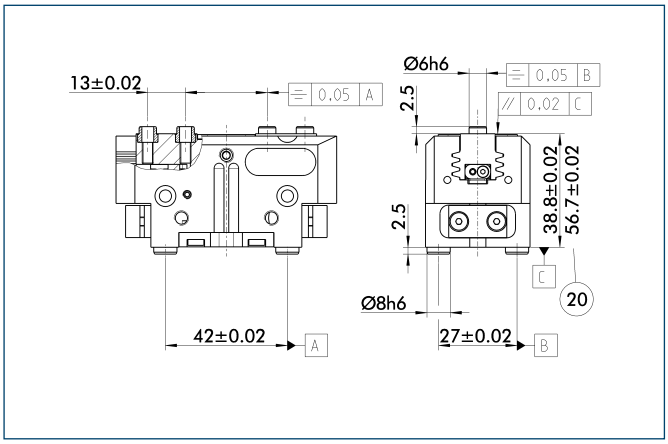


⑳ For AS / IS version

The indicated tolerances just refer to the types of precision versions shown in the chart of technical specifications. All other types of precision versions are available on request.

## Modular Assembly Automation

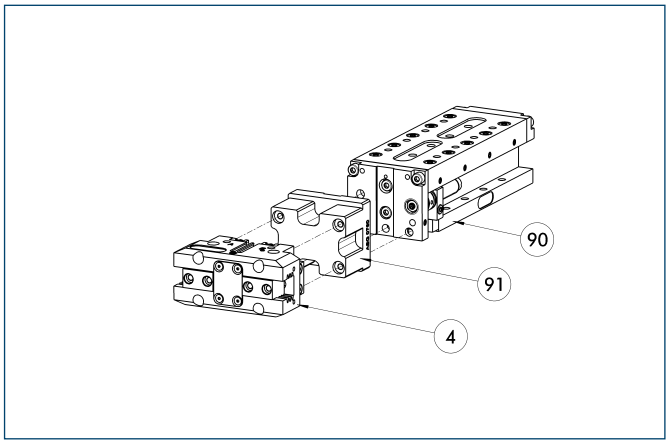


④ Gripper
⑨⓪ CLM
⑨① ASG

This gripper can be combined with the standard linear modules LM, KLM, CLM and ELM of the GEMOTEC modular system. For more information see our main catalog "Modular Assembly Automation".

## Maximum permitted finger projection

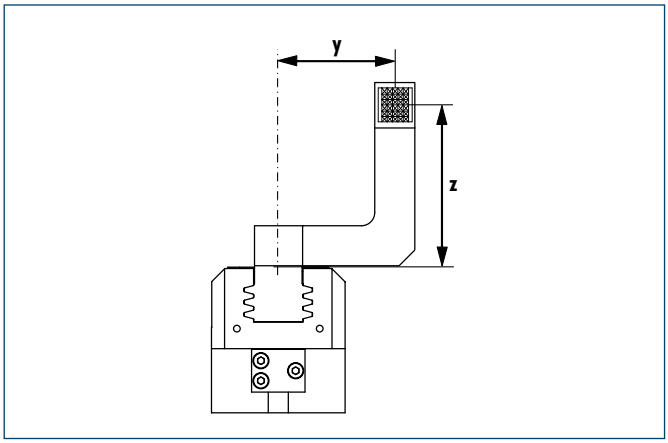


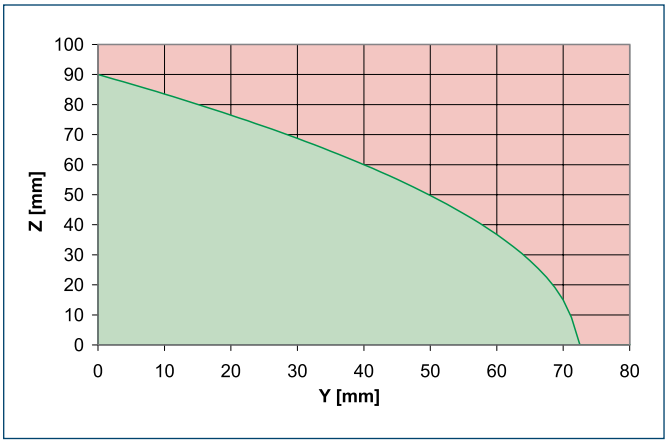


Permitted range
Inadmissible range

The curve applies to the basic version (stroke -1). For other versions, the curve will be parallel but offset in line with the max. permitted finger length.

## Protection cover

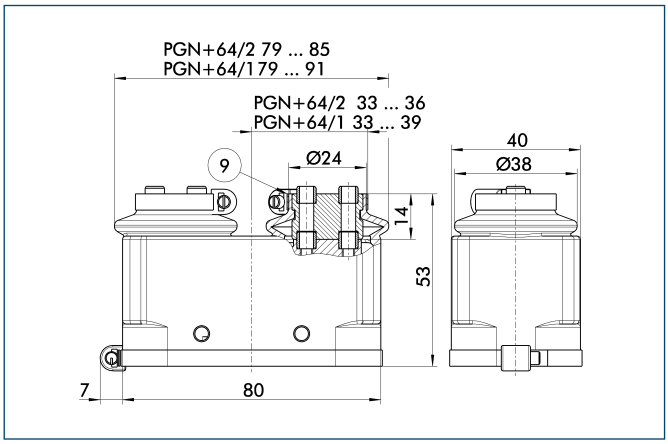


⑨ For mounting screw connection diagram, see basic version

The HUE protective cover completely protects the gripper against external influences up to IP65 if an additional sealing of the cover bottom is provided as part of the application. The mounting diagram shifts by the height of the intermediate jaw.

| Description | ID | Cleanroom class ISO-classification 14644-1 |
|---|---|---|
| Protection cover | | |
| HUE PGN-plus 64 | **0371480** | 2 |

## Quick-change Jaw System

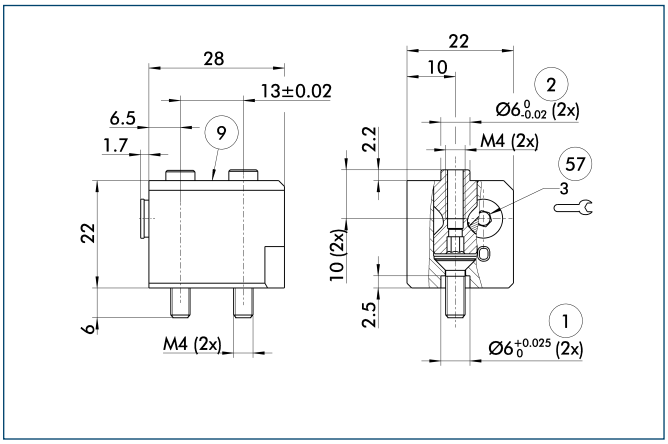


① Gripper connection
② Finger connection
⑨ For mounting screw connection diagram, see basic version
⑰ Locking

The BSWS quick-change jaw system enables top jaws to be changed on the gripper manually and rapidly. An adapter (BSWS-A) and a base (BSWS-B) are required for each gripper jaw.
For a reverse assembly without height set-up, one adapter (BSWS-A) and a kit (BSWS-U) per gripper jaw are required. Another effect of the BSWS-U is, that there are no disturbing fastening bores in the finger contour.

| Description | ID |
|---|---|
| Quick-change Jaw System adapter | |
| BSWS-A 64 | **0303022** |
| Quick-change Jaw System base | |
| BSWS-B 64 | **0303023** |
| Quick-change Jaw System reversed | |
| BSWS-U 64 | **0303041** |

You can find more detailed information and individual parts of the above-mentioned accessories in the “Accessories” catalog section.

## Universal intermediate jaw

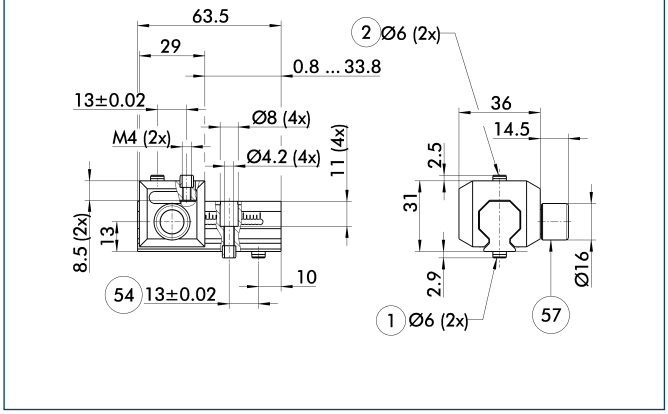


① Gripper connection
② Finger connection
54 Optional right or left connection
57 Locking

The universal intermediate jaw allows fast tool-free and reliable plugging and shifting of top jaws at the gripper.

| Description | ID | Grid dimension |
|---|---|---|
| Universal intermediate jaw | | |
| UZB 64 | **0300042** | 1.5 mm |

ⓘ The slide UZB-S can be removed completely and has to be ordered separately. Moreover, it allows a fast jaw change.

## Force measuring jaws

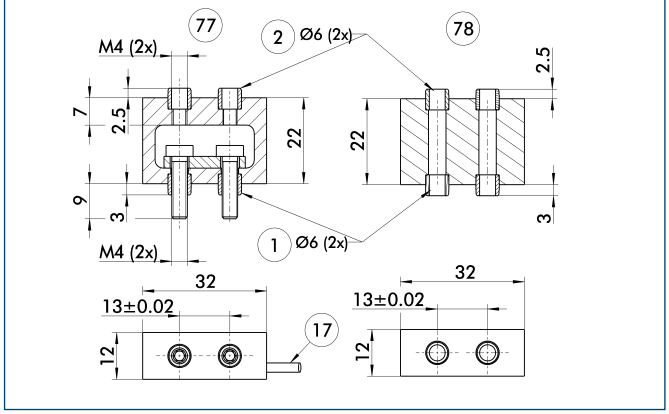


① Gripper connection
② Finger connection
17 Cable outlet
77 Active intermediate jaws
78 Passive intermediate jaws

Force measuring jaws measure gripping forces, but can also determine workpiece weights or dimensional deviations. There are active and passive intermediate jaws (FMS-ZBA or FMS-ZBP). At least one active force measuring jaw is required per gripper, the rest can be passive. For each active jaw, a FMS-A1 control unit and a FMS-A connection cable are required.

| Description | ID |
|---|---|
| Active intermediate jaws | |
| FMS-ZBA 64 | **0301832** |
| Passive intermediate jaws | |
| FMS-ZBP 64 | **0301833** |
| Electronic Processor | |
| FMS-A1 | **0301810** |
| Connection cables | |
| FMS-AK0200 | **0301820** |
| FMS-AK0500 | **0301821** |
| FMS-AK1000 | **0301822** |
| FMS-AK2000 | **0301823** |

## Finger blanks

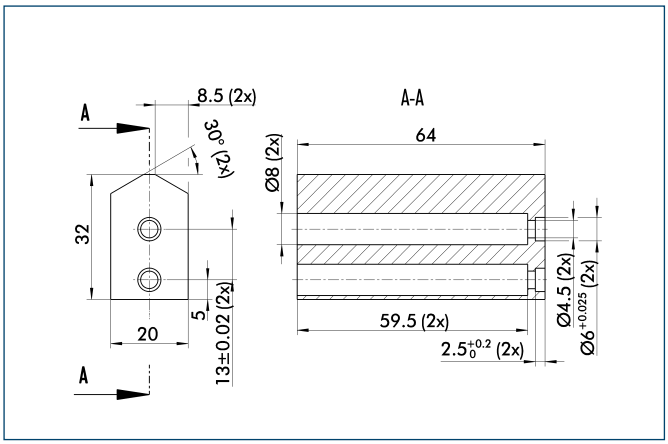


Finger blanks for customized subsequent machining

| Description | ID | Material | Scope of delivery |
|---|---|---|---|
| Finger blanks | | | |
| ABR-plus 64 | **0300010** | Aluminum | 1 |
| SBR-plus 64 | **0300020** | 16 MnCr 5 | 1 |

You can find more detailed information and individual parts of the above-mentioned accessories in the “Accessories” catalog section.

## Tolerance compensation unit

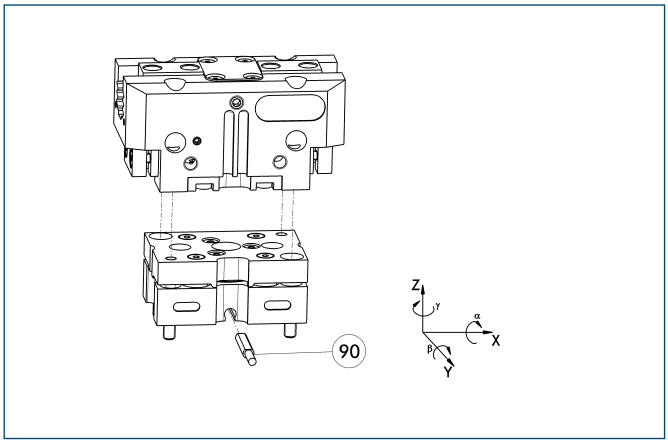


(90) Monitoring of locking

Grippers can be directly mounted without an adapter plate. Tolerance compensation unit and gripper have an identical screw connection diagram. Therefore the tolerance compensation units can be assembled later. Please consider the additional assembly height of the tolerance compensation unit. For details see catalog “Robot Accessories”.

| Description | ID | Locking | Deflection |
|---|---|---|---|
| Compensation unit | | | |
| TCU-064-3-MV-P | **0324774** | Yes | ±3°/±1°/±2° |
| TCU-064-3-OV-P | **0324775** | No | ±3°/±1°/±2° |

## Compensation unit with spring reset

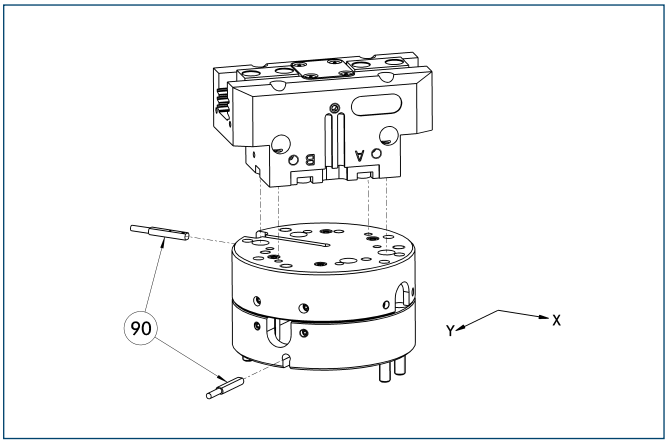


(90) Monitoring

Grippers can be directly mounted without using an adapter plate. For details see our catalog “Robot Accessories”.

| Description | ID | Compensation travel | Reset force |
|---|---|---|---|
| Compensation unit | | | |
| AGE-F-XY-063-1 | **0324940** | ±4 mm | 9 N |
| AGE-F-XY-063-2 | **0324941** | ±4 mm | 10 N |
| AGE-F-XY-063-3 | **0324942** | ±4 mm | 19.3 N |

## Attachment valves

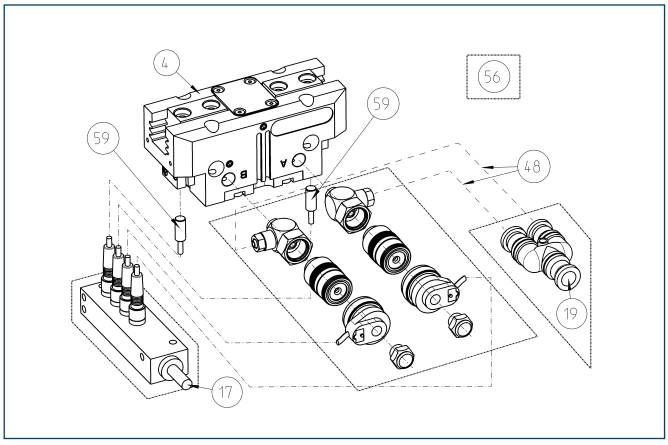


(4) Gripper
(17) Cable outlet
(19) Air connection
(48) Hose
(56) Included in delivery
(59) Monitoring “gripping”

For each gripper one attachment valve ABV is required, optional with distributor for sensors and valves. Attachment valves increase the efficiency, reduce the installation work and air consumption and simplify air supply. For details please refer to the “Accessories” catalog section.

| Description | ID |
|---|---|
| Attachment valves | |
| ABV-MV15-M5 | **0303323** |
| ABV-MV15-M5-V2-M8 | **0303386** |
| ABV-MV15-M5-V4-M8 | **0303356** |
| ABV-MV15-M5-V8-M8 | **0303357** |

## Programmable magnetic switch

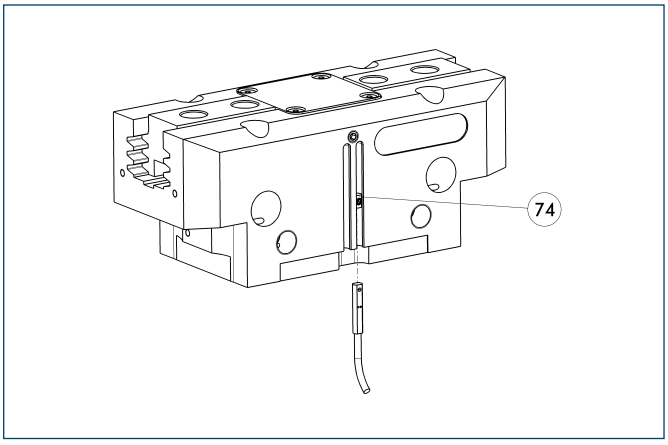


(74) Stop for MMS-P

Position monitoring with two programmable positions per sensor. The end position monitoring is mounted in the C-slot.

| Description | ID | Recommended product |
|---|---|---|
| Programmable magnetic switch | | |
| MMS-P 22-S-M8-PNP | **0301370** | • |
| MMSK-P 22-S-PNP | **0301371** | |
| Connection cables | | |
| KA BG08-L 4P-0500 | **0307767** | |
| KA BG08-L 4P-1000 | **0307768** | |
| KA BW08-L 4P-0500 | **0307765** | |
| KA BW08-L 4P-1000 | **0307766** | |
| Sensor Distributor | | |
| V2-M8-4P-2XM8-3P | **0301380** | |

ⓘ Please note the minimum permitted bending radii for the sensor cables, which are generally 35 mm.
ⓘ Per gripper one sensor (closer/NO) is required, optionally a cable extension.

You can find more detailed information and individual parts of the above-mentioned accessories in the “Accessories” catalog section.

## Electronic magnetic switches

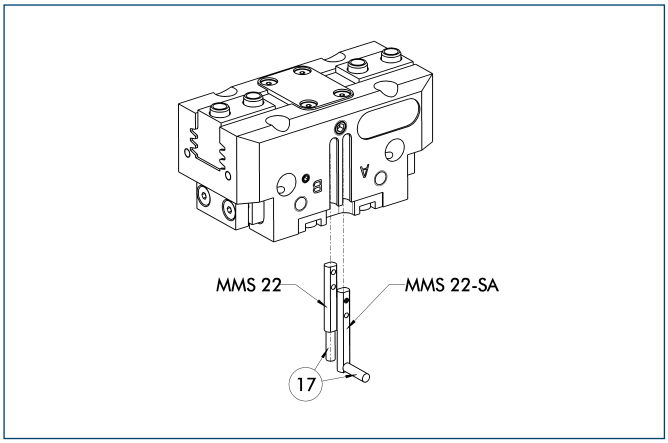


⑰ Cable outlet

End position monitoring for mounting in the C-slot

| Description | ID | Recommended product |
|---|---|---|
| Electronic magnetic switches | | |
| MMS 22-S-M5-PNP | **0301438** | |
| MMS 22-S-M5-NPN | **0301439** | |
| MMS 22-S-M8-PNP | **0301432** | • |
| MMS 22-S-M8-NPN | **0301433** | |
| MMSK 22-S-PNP | **0301434** | |
| MMSK 22-S-NPN | **0301435** | |
| Electronic magnetic switches with lateral cable outlet | | |
| MMS 22-S-M5-PNP-SA | **0301448** | |
| MMS 22-S-M5-NPN-SA | **0301449** | |
| MMS 22-S-M8-PNP-SA | **0301442** | • |
| MMS 22-S-M8-NPN-SA | **0301443** | |
| MMSK 22-S-PNP-SA | **0301444** | |
| MMSK 22-S-NPN-SA | **0301445** | |
| Connection cables | | |
| KA BG05-L 3P-0300 | **0301652** | |
| KA BG08-L 3P-0300-PNP | **0301622** | |
| KA BG08-L 3P-0500-PNP | **0301623** | |
| KA BW05-L 3P-0300 | **0301650** | |
| KA BW08-L 3P-0300-NPN | **0301602** | |
| KA BW08-L 3P-0300-PNP | **0301594** | |
| KA BW08-L 3P-0500-NPN | **9641116** | |
| KA BW08-L 3P-0500-PNP | **0301502** | |
| Cable extensions | | |
| KV BW08-SG08 3P-0030-PNP | **0301495** | |
| KV BW08-SG08 3P-0100-PNP | **0301496** | |
| KV BW08-SG08 3P-0200-PNP | **0301497** | |

ⓘ Two sensors (closer/NO) are required for each gripper, plus extension cables as an option.

ⓘ Please note the minimum permitted bending radii for the sensor cables, which are generally 35 mm.

## Inductive proximity switches

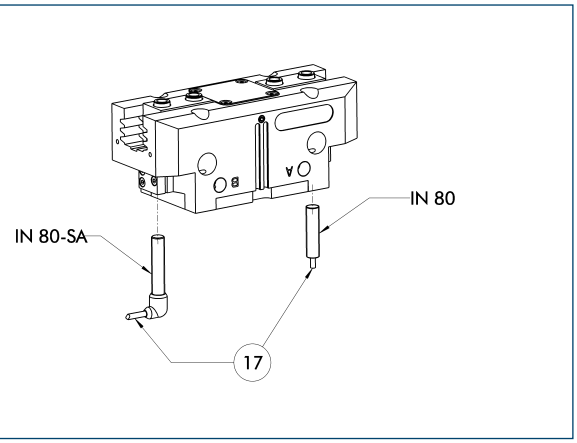


⑰ Cable outlet

End position monitoring for direct mounting

| Description | ID | Recommended product |
|---|---|---|
| Inductive proximity switches | | |
| IN 80-S-M8 | **0301478** | • |
| IN 80-S-M12 | **0301578** | |
| INK 80-S | **0301550** | |
| Inductive proximity switch with lateral outlet | | |
| IN 80-S-M12-SA | **0301587** | |
| IN 80-S-M8-SA | **0301483** | • |
| INK 80-S-SA | **0301566** | |
| Connection cables | | |
| KA BG08-L 3P-0300-PNP | **0301622** | |
| KA BG08-L 3P-0500-PNP | **0301623** | |
| KA BG12-L 3P-0500-PNP | **30016369** | |
| KA BW08-L 3P-0300-PNP | **0301594** | |
| KA BW08-L 3P-0500-PNP | **0301502** | |
| KA BW12-L 3P-0300-PNP | **0301503** | |
| KA BW12-L 3P-0500-PNP | **0301507** | |
| Cable extensions | | |
| KV BG12-SG12 3P-0030-PNP | **0301999** | |
| KV BG12-SG12 3P-0060-PNP | **0301998** | |
| KV BW08-SG08 3P-0030-PNP | **0301495** | |
| KV BW08-SG08 3P-0100-PNP | **0301496** | |
| KV BW08-SG08 3P-0200-PNP | **0301497** | |
| KV BW12-SG12 3P-0030-PNP | **0301595** | |
| KV BW12-SG12 3P-0100-PNP | **0301596** | |
| KV BW12-SG12 3P-0200-PNP | **0301597** | |

ⓘ Two sensors (closer/NO) are required for each gripper, plus extension cables as an option.

ⓘ Please note the minimum permitted bending radii for the sensor cables, which are generally 35 mm.


You can find more detailed information and individual parts of the above-mentioned accessories in the “Accessories” catalog section.

## Cylindrical Reed Switches

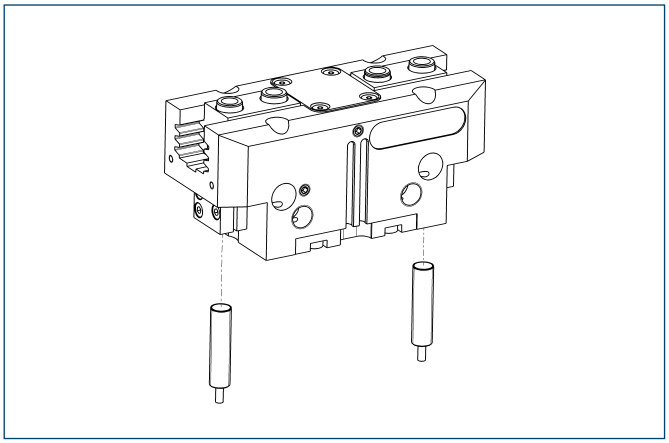

End position monitoring mounted with mounting kit

| Description | ID |
|---|---|
| Mounting kit for proximity switch | |
| AS-RMS 80 PGN/PZN-plus 64/80 | **0377725** |
| Reed Switches | |
| RMS 80-S-M8 | **0377721** |

ⓘ Two sensors (closer/NO) are required for each gripper, plus extension cables as an option.
ⓘ This mounting kit needs to be ordered optionally as an accessory.
ⓘ Please note the minimum permitted bending radii for the sensor cables, which are generally 35 mm.

## Analog position sensor

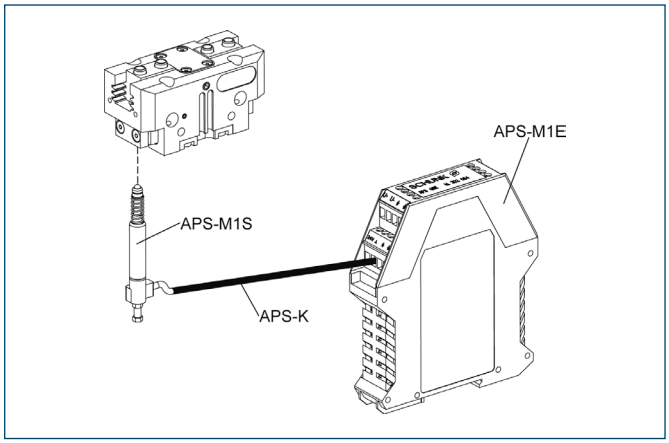


Analog multi position monitoring for any desired positions

| Description | ID |
|---|---|
| Mounting kit | |
| AS-APS-M1-64/1 | **0302075** |
| AS-APS-M1-64/2 | **0302076** |
| Connection cables | |
| APS-K0200 | **0302066** |
| APS-K0700 | **0302068** |
| Electronic Processor | |
| APS-M1E | **0302064** |
| Sensor | |
| APS-M1S | **0302062** |

ⓘ When using an APS system, for each gripper a mounting kit (AS-APS), an APS sensor (APS-M 1S, incl. 3 m cable) as well as an electronics (APS-M1e) are required.
ⓘ An extension cable (APS-K) can be connected between the sensor and the electronics as an option. The max. cable length between the sensor and the electronics is 10 m, between the electronics and their control unit (PLC) it is max. 1 m.

You can find more detailed information and individual parts of the above-mentioned accessories in the “Accessories” catalog section.

## Flexible Position Sensor

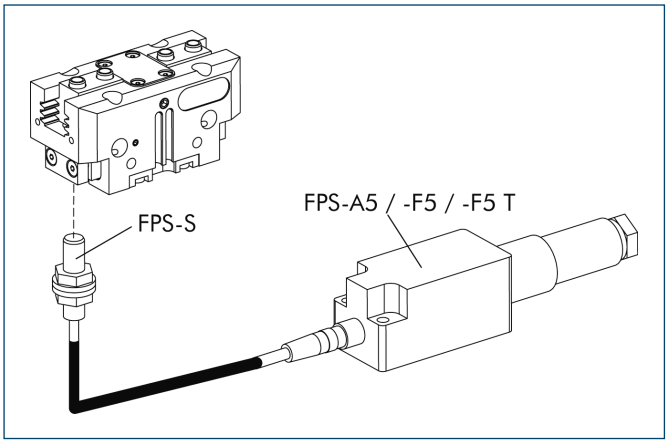


Flexible position monitoring of up to five positions

| Description | ID |
|---|---|
| Mounting kit for FPS | |
| AS-PGN/PZN-plus 64/1, PGN/PZN-plus 80/2 | **0301630** |
| Electronic Processor | |
| FPS-F5 | **0301805** |
| FPS-F5 T | **0301807** |
| Sensor | |
| FPS-S M8 | **0301704** |

ⓘ When using a FPS system, a FPS sensor (FPS-S) and a control unit (FPS-F5 / F5 T or A5) are required for each gripper as well as a mounting kit (AS), if listed. Cable extensions (KV) are available as options in the “Accessories” catalog section.

You can find more detailed information and individual parts of the above-mentioned accessories in the “Accessories” catalog section.

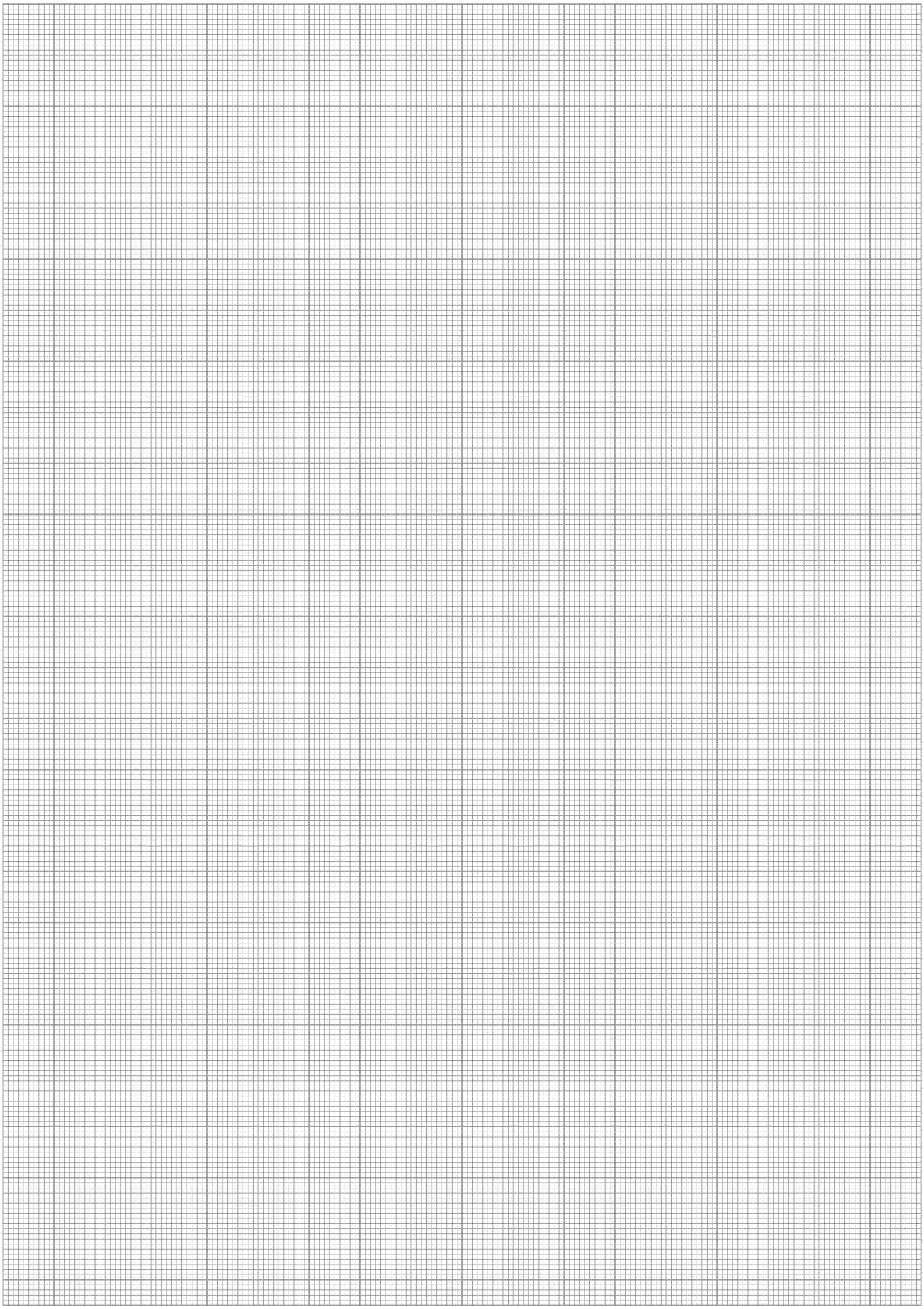

# PGN-plus 80

**Pneumatic • 2-Finger Parallel Gripper • Universal Gripper**



## Gripping force, I.D. gripping

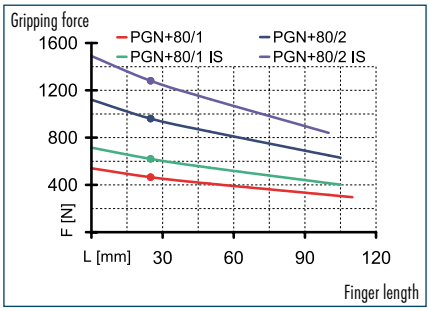


## Gripping force, O.D. gripping

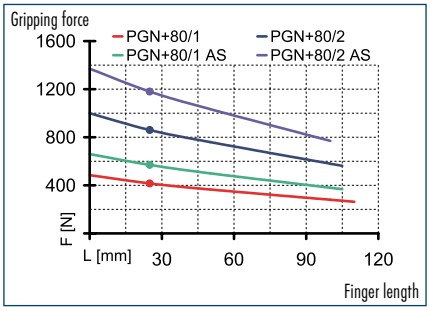


## Finger load

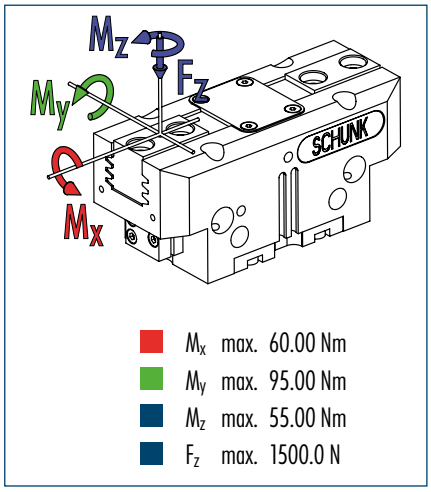


- $M_x$ max. 60.00 Nm
- $M_y$ max. 95.00 Nm
- $M_z$ max. 55.00 Nm
- $F_z$ max. 1500.0 N

ⓘ The indicated moments and forces are static values, apply per base jaw and may occur simultaneously. $M_y$ may arise in addition to the moment generated by the gripping force itself. If the max. permitted finger weight is exceeded, it is imperative to throttle the air pressure so that the jaw movement occurs without any hitting or bouncing. Service life may be reduced.

## Technical data

| Description | | PGN-plus 80-1 | PGN-plus 80-2 | PGN-plus 80-1-AS | PGN-plus 80-2-AS | PGN-plus 80-1-IS | PGN-plus 80-2-IS |
|---|---|---|---|---|---|---|---|
| **ID** | | **0371101** | **0371151** | **0371401** | **0371451** | **0371461** | **0371471** |
| Stroke per finger | [mm] | 8 | 4 | 8 | 4 | 8 | 4 |
| Closing force | [N] | 415 | 860 | 570 | 1180 | | |
| Opening force | [N] | 465 | 960 | | | 620 | 1280 |
| Min. spring force | [N] | | | 155 | 320 | 155 | 320 |
| Weight | [kg] | 0.5 | 0.5 | 0.6 | 0.6 | 0.6 | 0.6 |
| Recommended workpiece weight | [kg] | 2.1 | 4.3 | 2.1 | 4.3 | 2.1 | 4.3 |
| Air consumption per double stroke | [cm³] | 21 | 21 | 45 | 45 | 45 | 45 |
| Min./max. operating pressure | [bar] | 2.5/8 | 2.5/8 | 4/6.5 | 4/6.5 | 4/6.5 | 4/6.5 |
| Nominal operating pressure | [bar] | 6 | 6 | 6 | 6 | 6 | 6 |
| Closing/opening time | [s] | 0.04/0.04 | 0.04/0.04 | 0.03/0.05 | 0.03/0.05 | 0.05/0.03 | 0.05/0.03 |
| Max. permitted finger length | [mm] | 110 | 105 | 105 | 100 | 105 | 100 |
| Max. permitted weight per finger | [kg] | 0.6 | 0.6 | 0.6 | 0.6 | 0.6 | 0.6 |
| IP class | | 40 | 40 | 40 | 40 | 40 | 40 |
| Min./max. ambient temperature | [°C] | -10/90 | -10/90 | -10/90 | -10/90 | -10/90 | -10/90 |
| Repeat accuracy | [mm] | 0.01 | 0.01 | 0.01 | 0.01 | 0.01 | 0.01 |
| Cleanroom class ISO-classification 14644-1 | | 5 | 5 | 5 | 5 | 5 | 5 |
| **OPTIONS and their characteristics** | | | | | | | |
| Dust-protection version | | **37371101** | **37371151** | **37371401** | **37371451** | **37371461** | **37371471** |
| IP class | | 64 | 64 | 64 | 64 | 64 | 64 |
| Weight | [kg] | 0.6 | 0.6 | 0.7 | 0.7 | 0.7 | 0.7 |
| Anti-corrosion version | | **38371101** | **38371151** | **38371401** | **38371451** | **38371461** | **38371471** |
| High-temperature version | | **39371101** | **39371151** | **39371401** | **39371451** | **39371461** | **39371471** |
| Min./max. ambient temperature | [°C] | -10/130 | -10/130 | -10/130 | -10/130 | -10/130 | -10/130 |
| Force intensified version | | PGN-plus 80-1-KVZ | PGN-plus 80-2-KVZ | PGN-plus 80-1-AS-KVZ | | PGN-plus 80-1-IS-KVZ | |
| ID | | **0372101** | **0372151** | **0372401** | | **0372461** | |
| Closing force | [N] | 745 | 1550 | 900 | | | |
| Opening force | [N] | 835 | 1730 | | | 990 | |
| Weight | [kg] | 0.65 | 0.65 | 0.75 | | 0.75 | |
| Maximum pressure | [bar] | 6 | 6 | 6 | | 6 | |
| Max. permitted finger length | [mm] | 100 | 80 | 80 | | 80 | |
| Precision version | | **0371123** | **0371173** | **0371423** | **0371438** | | |

## Main view

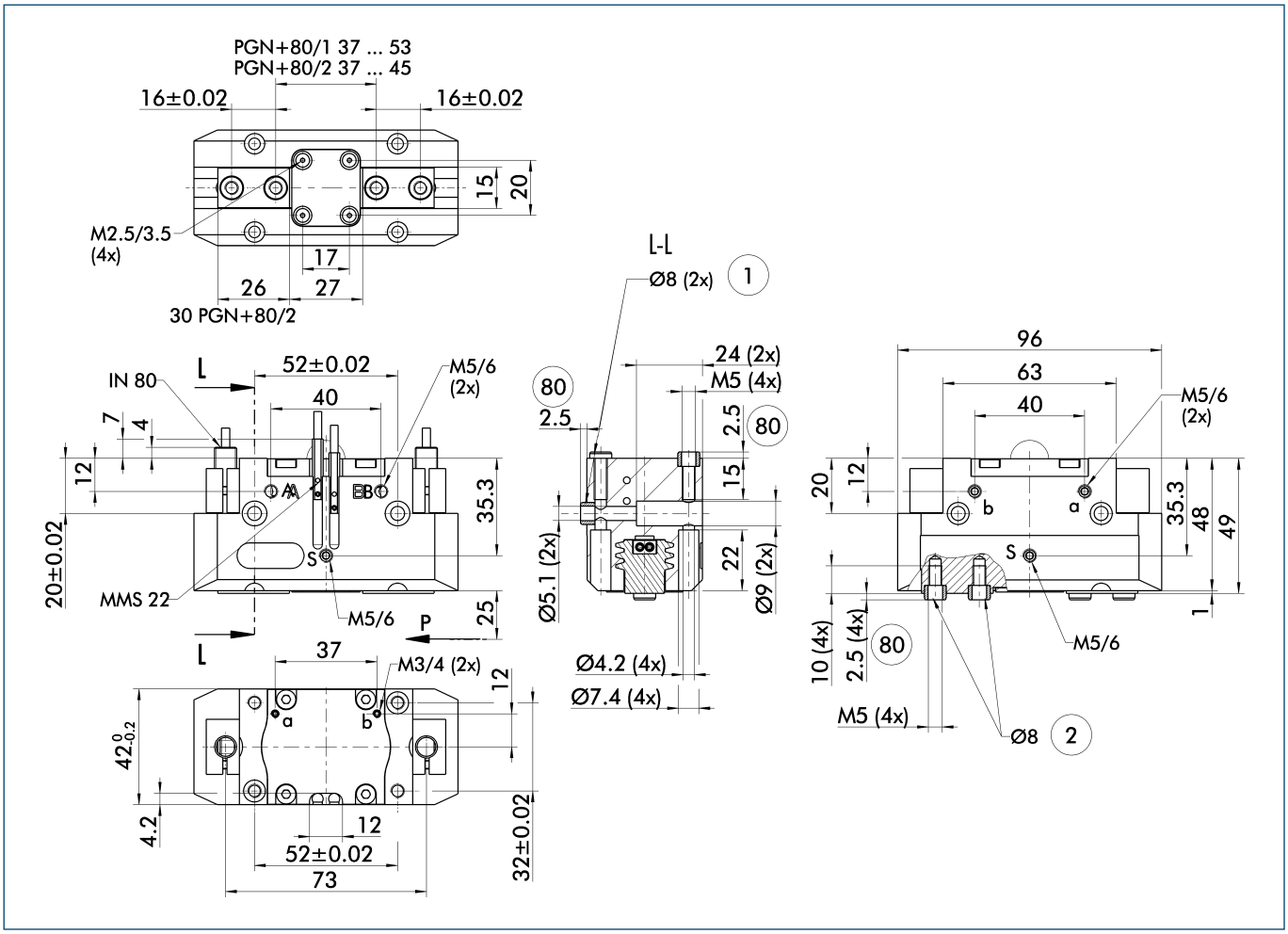


The drawing shows the gripper in the basic version with closed jaws, the dimensions do not include the options described below.

ⓘ The SDV-P pressure maintenance valve can also be used for I.D. or O.D. gripping alternatively or in addition to the spring-loaded, mechanical gripping force maintenance device (see "Accessories" catalog section).

A, a Main/direct connection, gripper opening
B, b Main/direct connection, gripper closing
S Air purge connection, or deaeration bore
① Gripper connection
② Finger connection
80 Depth of the centering sleeve hole in the matching part

## Hose-free direct connection

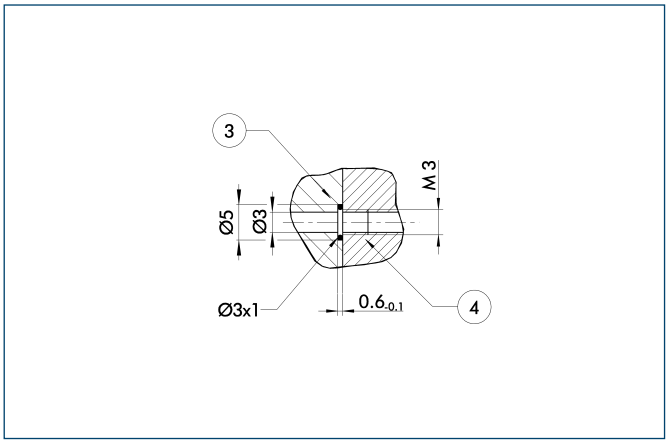


③ Adapter
④ Gripper

The direct connection is used for supplying compressed air without hoses. Instead, the pressure medium is fed through bore-holes in the mounting plate.

## AS/IS gripping force maintenance device

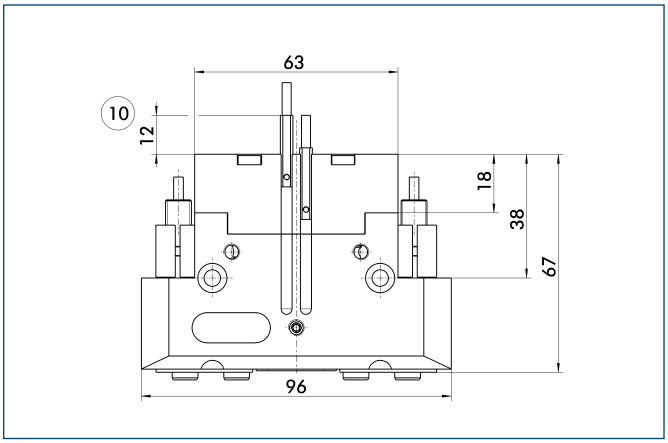


⑩ Projection applies only for AS version

The mechanical gripping force maintenance device ensures a minimum gripping force even in case of pressure drop. This acts as closing force in the AS version, and as opening force in the IS version. In addition, the gripping force maintenance device can also be used for increasing the gripping force or for single-acting gripping.

## Dust-protection version

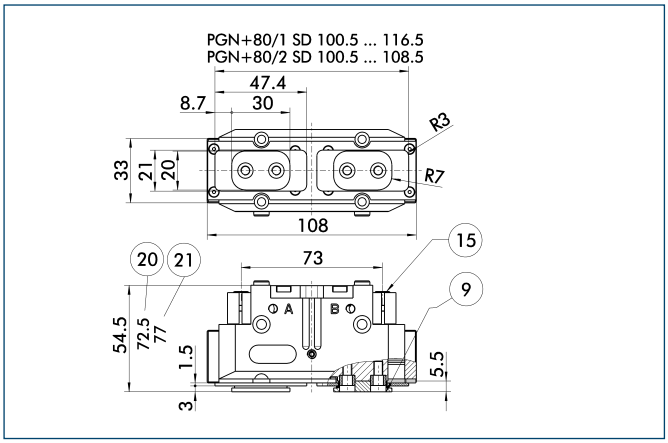


⑨ For mounting screw connection diagram, see basic version
⑮ Sealing bolt
⑳ For AS / IS version
㉑ Applies for KVZ version

The "dust-protection" option increases the degree of protection against penetrating substances. The screw connection diagram shifts by the height of the intermediate jaw. The finger length is still measured from the upper edge of the gripper housing.

## Force intensified version

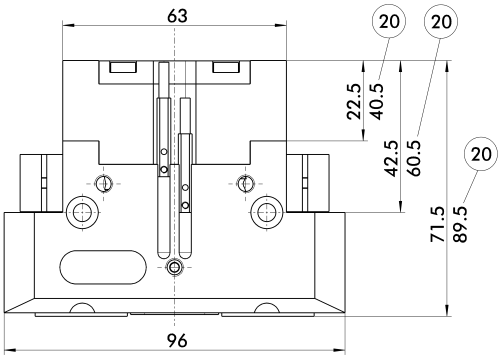


⑳ For AS / IS version

The KVZ cylinder increases the gripping forces during opening and closing. A second, in series-connected piston also increases the force on the wedge hook. The full gripping force shown in the data table is sometimes only reached after a few hundred gripping cycles. Please consider that grippers which are equipped with a gripping force maintenance device (AS / IS) are higher.

## Precision version

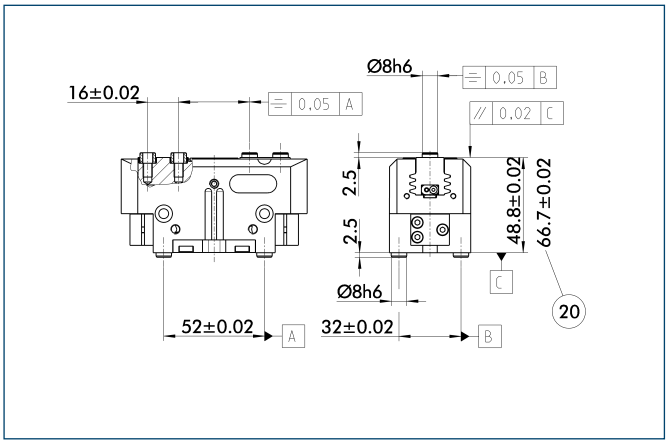


⑳ For AS / IS version

The indicated tolerances just refer to the types of precision versions shown in the chart of technical specifications. All other types of precision versions are available on request.

## Modular Assembly Automation

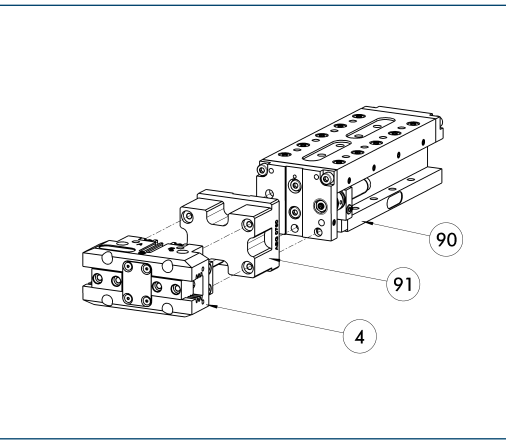


④ Gripper
⑨⓪ CLM
⑨① ASG

This gripper can be combined with the standard linear modules LM, KLM, CLM and ELM of the GEMOTEC modular system. For more information see our main catalog "Modular Assembly Automation".

## Maximum permitted finger projection

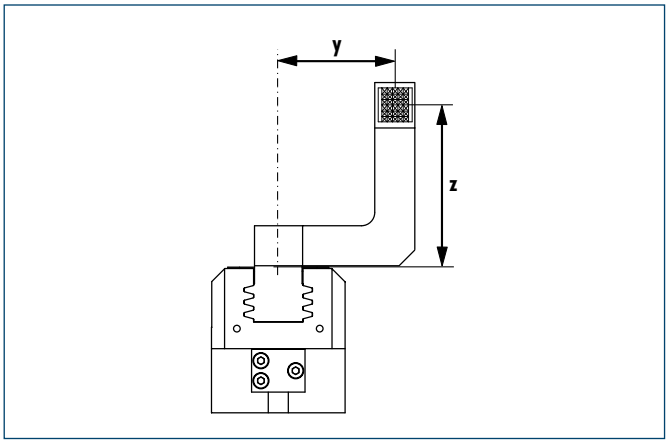


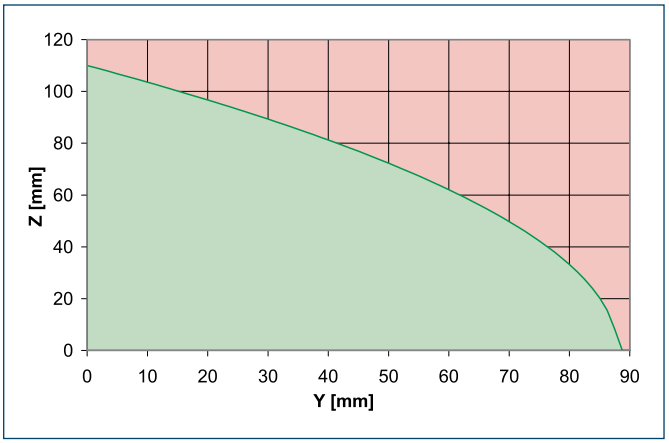


Permitted range
Inadmissible range

The curve applies to the basic version (stroke -1). For other versions, the curve will be parallel but offset in line with the max. permitted finger length.

## Protection cover

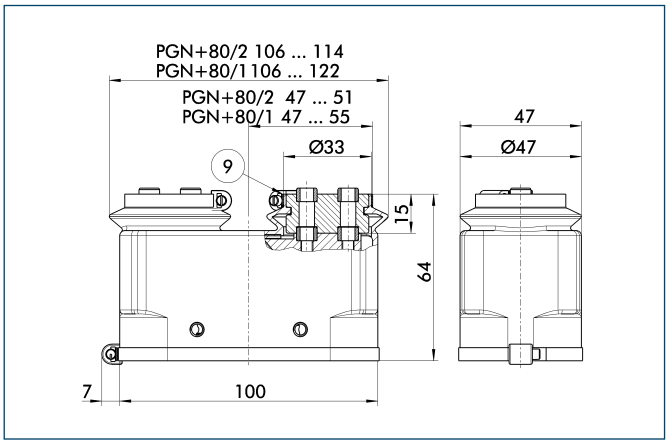


⑨ For mounting screw connection diagram, see basic version

The HUE protective cover completely protects the gripper against external influences up to IP65 if an additional sealing of the cover bottom is provided as part of the application. The mounting diagram shifts by the height of the intermediate jaw.

| Description | ID | Cleanroom class ISO-classification 14644-1 |
|---|---|---|
| Protection cover | | |
| HUE PGN-plus 80 | **0371481** | 2 |

## Quick-change Jaw System

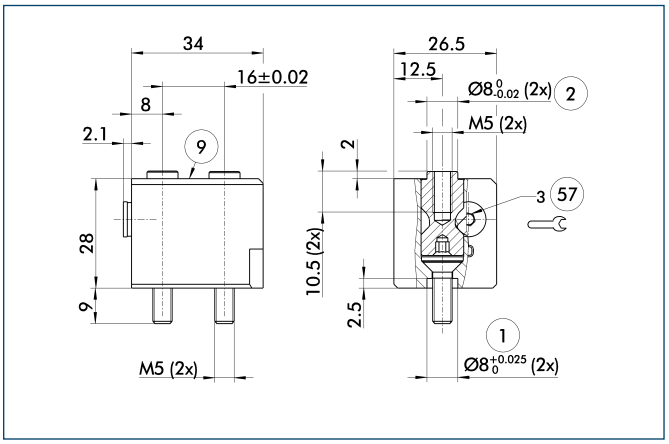


① Gripper connection
② Finger connection
⑨ For mounting screw connection diagram, see basic version
57 Locking

The BSWS quick-change jaw system enables top jaws to be changed on the gripper manually and rapidly. An adapter (BSWS-A) and a base (BSWS-B) are required for each gripper jaw.
For a reverse assembly without height set-up, one adapter (BSWS-A) and a kit (BSWS-U) per gripper jaw are required. Another effect of the BSWS-U is, that there are no disturbing fastening bores in the finger contour.

| Description | ID |
|---|---|
| Quick-change Jaw System adapter | |
| BSWS-A 80 | **0303024** |
| Quick-change Jaw System base | |
| BSWS-B 80 | **0303025** |
| Quick-change Jaw System reversed | |
| BSWS-U 80 | **0303042** |

You can find more detailed information and individual parts of the above-mentioned accessories in the “Accessories” catalog section.

## Universal intermediate jaw

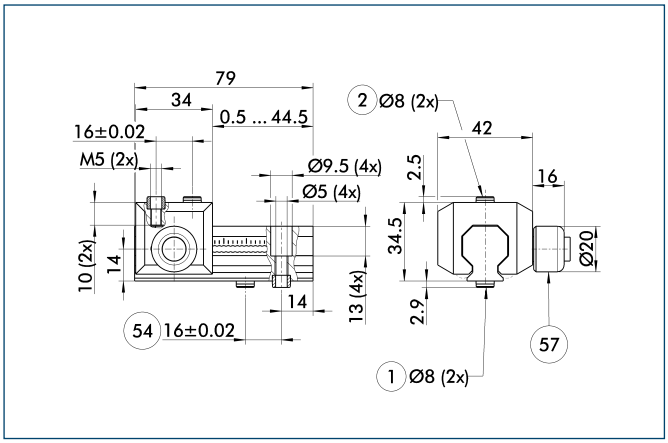


① Gripper connection
② Finger connection
54 Optional right or left connection
57 Locking

The universal intermediate jaw allows fast tool-free and reliable plugging and shifting of top jaws at the gripper.

| Description | ID | Grid dimension |
|---|---|---|
| Universal intermediate jaw | | |
| UZB 80 | **0300043** | 2 mm |
| UZB-S 80 | **5518271** | 2 mm |

ⓘ The slide UZB-S can be removed completely and has to be ordered separately. Moreover, it allows a fast jaw change.

## Force measuring jaws

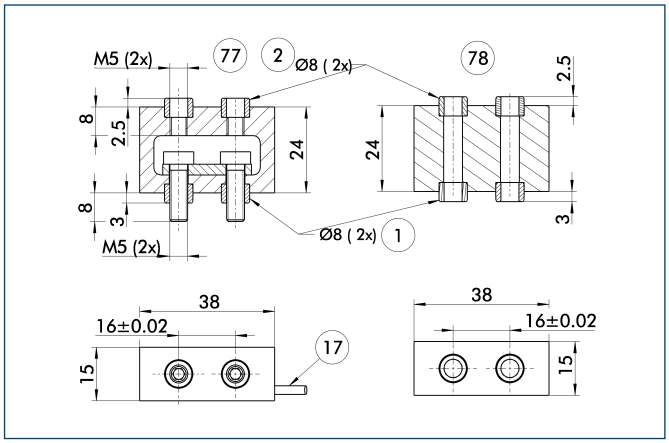


① Gripper connection
② Finger connection
17 Cable outlet
77 Active intermediate jaws
78 Passive intermediate jaws

Force measuring jaws measure gripping forces, but can also determine workpiece weights or dimensional deviations. There are active and passive intermediate jaws (FMS-ZBA or FMS-ZBP). At least one active force measuring jaw is required per gripper, the rest can be passive. For each active jaw, a FMS-A1 control unit and a FMS-A connection cable are required.

| Description | ID |
|---|---|
| Active intermediate jaws | |
| FMS-ZBA 80 | **0301834** |
| Passive intermediate jaws | |
| FMS-ZBP 80 | **0301835** |
| Electronic Processor | |
| FMS-A1 | **0301810** |
| Connection cables | |
| FMS-AK0200 | **0301820** |
| FMS-AK0500 | **0301821** |
| FMS-AK1000 | **0301822** |
| FMS-AK2000 | **0301823** |

## Finger blanks

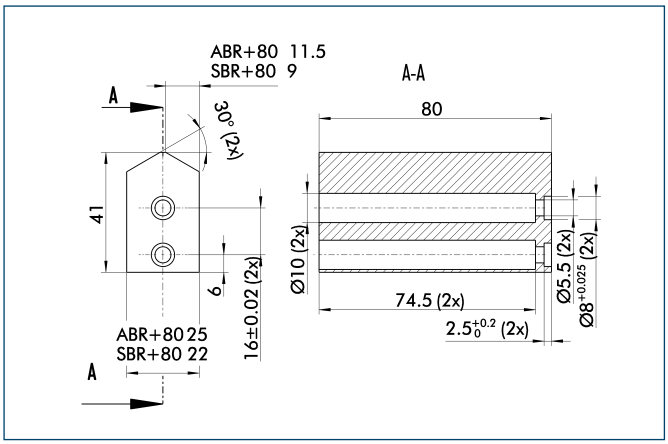


Finger blanks for customized subsequent machining

| Description | ID | Material | Scope of delivery |
|---|---|---|---|
| Finger blanks | | | |
| ABR-plus 80 | **0300011** | Aluminum | 1 |
| SBR-plus 80 | **0300021** | 16 MnCr 5 | 1 |

You can find more detailed information and individual parts of the above-mentioned accessories in the “Accessories” catalog section.

## Tolerance compensation unit

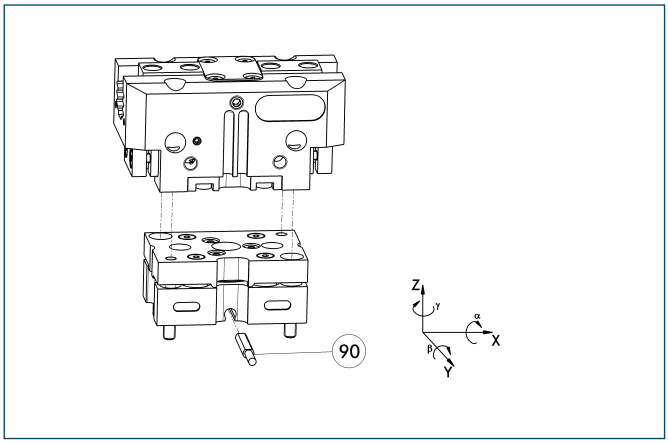


(90) Monitoring of locking

Grippers can be directly mounted without an adapter plate. Tolerance compensation unit and gripper have an identical screw connection diagram. Therefore the tolerance compensation units can be assembled later. Please consider the additional assembly height of the tolerance compensation unit. For details see catalog “Robot Accessories”.

| Description | ID | Locking | Deflection |
|---|---|---|---|
| Compensation unit | | | |
| TCU-080-3-MV-P | **0324792** | Yes | ±1.5°/±1°/±2° |
| TCU-080-3-OV-P | **0324793** | No | ±1.5°/±1°/±2° |

## Compensation unit with spring reset

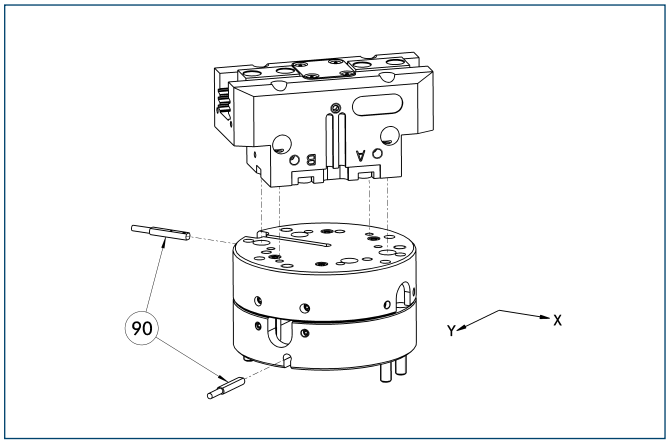


(90) Monitoring

Grippers can be directly mounted without using an adapter plate. For details see our catalog “Robot Accessories”.

| Description | ID | Compensation travel | Reset force |
|---|---|---|---|
| Compensation unit | | | |
| AGE-F-XY-063-1 | **0324940** | ±4 mm | 9 N |
| AGE-F-XY-063-2 | **0324941** | ±4 mm | 10 N |
| AGE-F-XY-063-3 | **0324942** | ±4 mm | 19.3 N |

## Attachment valves

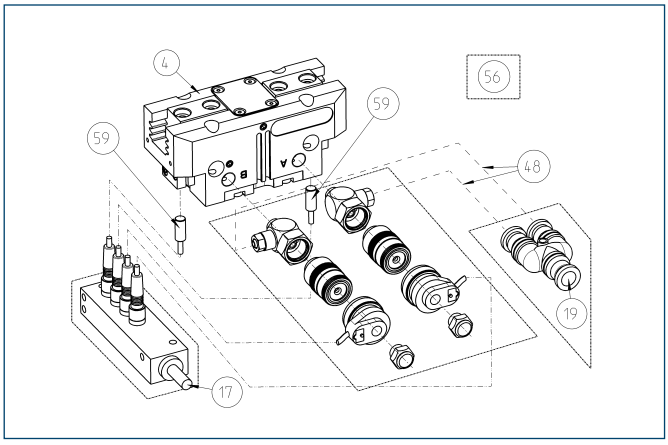


(4) Gripper
(17) Cable outlet
(19) Air connection
(48) Hose
(56) Included in delivery
(59) Monitoring “gripping”

For each gripper one attachment valve ABV is required, optional with distributor for sensors and valves. Attachment valves increase the efficiency, reduce the installation work and air consumption and simplify air supply. For details please refer to the “Accessories” catalog section.

| Description | ID |
|---|---|
| Attachment valves | |
| ABV-MV25-M5 | **0303326** |
| ABV-MV25-M5-V2-M8 | **0303392** |
| ABV-MV25-M5-V4-M8 | **0303362** |
| ABV-MV25-M5-V8-M8 | **0303363** |

## Programmable magnetic switch

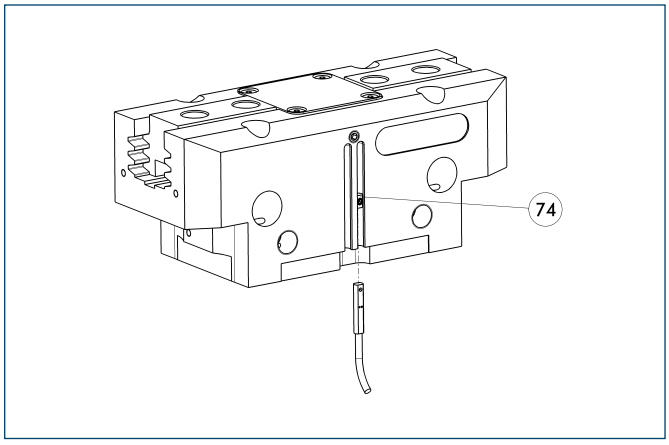


(74) Stop for MMS-P

Position monitoring with two programmable positions per sensor. The end position monitoring is mounted in the C-slot.

| Description | ID | Recommended product |
|---|---|---|
| Programmable magnetic switch | | |
| MMS-P 22-S-M8-PNP | **0301370** | • |
| MMSK-P 22-S-PNP | **0301371** | |
| Connection cables | | |
| KA BG08-L 4P-0500 | **0307767** | |
| KA BG08-L 4P-1000 | **0307768** | |
| KA BW08-L 4P-0500 | **0307765** | |
| KA BW08-L 4P-1000 | **0307766** | |
| Sensor Distributor | | |
| V2-M8-4P-2XM8-3P | **0301380** | |

ⓘ Please note the minimum permitted bending radii for the sensor cables, which are generally 35 mm.
ⓘ Per gripper one sensor (closer/NO) is required, optionally a cable extension.

You can find more detailed information and individual parts of the above-mentioned accessories in the “Accessories” catalog section.

## Electronic magnetic switches

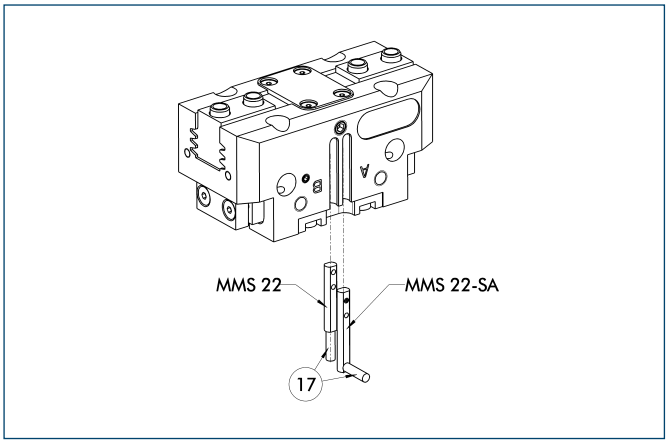


⑰ Cable outlet

End position monitoring for mounting in the C-slot

| Description | ID | Recommended product |
|---|---|---|
| Electronic magnetic switches | | |
| MMS 22-S-M5-PNP | **0301438** | |
| MMS 22-S-M5-NPN | **0301439** | |
| MMS 22-S-M8-PNP | **0301432** | • |
| MMS 22-S-M8-NPN | **0301433** | |
| MMSK 22-S-PNP | **0301434** | |
| MMSK 22-S-NPN | **0301435** | |
| Electronic magnetic switches with lateral cable outlet | | |
| MMS 22-S-M5-PNP-SA | **0301448** | |
| MMS 22-S-M5-NPN-SA | **0301449** | |
| MMS 22-S-M8-PNP-SA | **0301442** | • |
| MMS 22-S-M8-NPN-SA | **0301443** | |
| MMSK 22-S-PNP-SA | **0301444** | |
| MMSK 22-S-NPN-SA | **0301445** | |
| Connection cables | | |
| KA BG05-L 3P-0300 | **0301652** | |
| KA BG08-L 3P-0300-PNP | **0301622** | |
| KA BG08-L 3P-0500-PNP | **0301623** | |
| KA BW05-L 3P-0300 | **0301650** | |
| KA BW08-L 3P-0300-NPN | **0301602** | |
| KA BW08-L 3P-0300-PNP | **0301594** | |
| KA BW08-L 3P-0500-NPN | **9641116** | |
| KA BW08-L 3P-0500-PNP | **0301502** | |
| Cable extensions | | |
| KV BW08-SG08 3P-0030-PNP | **0301495** | |
| KV BW08-SG08 3P-0100-PNP | **0301496** | |
| KV BW08-SG08 3P-0200-PNP | **0301497** | |

ⓘ Two sensors (closer/NO) are required for each gripper, plus extension cables as an option.

ⓘ Please note the minimum permitted bending radii for the sensor cables, which are generally 35 mm.

## Inductive proximity switches

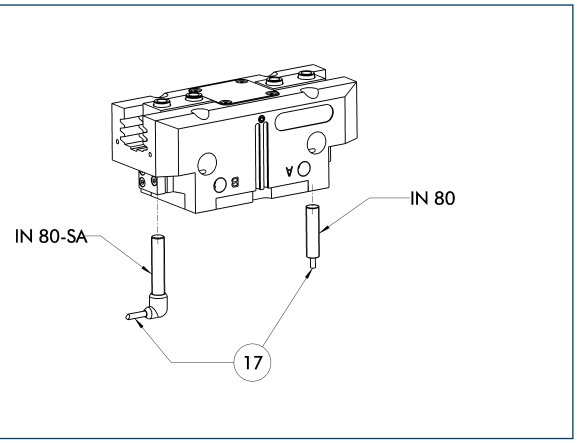


⑰ Cable outlet

End position monitoring for direct mounting

| Description | ID | Recommended product |
|---|---|---|
| Inductive proximity switches | | |
| IN 80-S-M8 | **0301478** | • |
| IN 80-S-M12 | **0301578** | |
| INK 80-S | **0301550** | |
| IN-C 80-S-M8 | **0301475** | |
| Inductive proximity switch with lateral outlet | | |
| IN 80-S-M12-SA | **0301587** | |
| IN 80-S-M8-SA | **0301483** | • |
| INK 80-S-SA | **0301566** | |
| Connection cables | | |
| KA BG08-L 3P-0300-PNP | **0301622** | |
| KA BG08-L 3P-0500-PNP | **0301623** | |
| KA BG12-L 3P-0500-PNP | **30016369** | |
| KA BW08-L 3P-0300-PNP | **0301594** | |
| KA BW08-L 3P-0500-PNP | **0301502** | |
| KA BW12-L 3P-0300-PNP | **0301503** | |
| KA BW12-L 3P-0500-PNP | **0301507** | |
| Cable extensions | | |
| KV BG12-SG12 3P-0030-PNP | **0301999** | |
| KV BG12-SG12 3P-0060-PNP | **0301998** | |
| KV BW08-SG08 3P-0030-PNP | **0301495** | |
| KV BW08-SG08 3P-0100-PNP | **0301496** | |
| KV BW08-SG08 3P-0200-PNP | **0301497** | |
| KV BW12-SG12 3P-0030-PNP | **0301595** | |
| KV BW12-SG12 3P-0100-PNP | **0301596** | |
| KV BW12-SG12 3P-0200-PNP | **0301597** | |

ⓘ Two sensors (closer/NO) are required for each gripper, plus extension cables as an option.

ⓘ Please note the minimum permitted bending radii for the sensor cables, which are generally 35 mm.


You can find more detailed information and individual parts of the above-mentioned accessories in the “Accessories” catalog section.

## Cylindrical Reed Switches

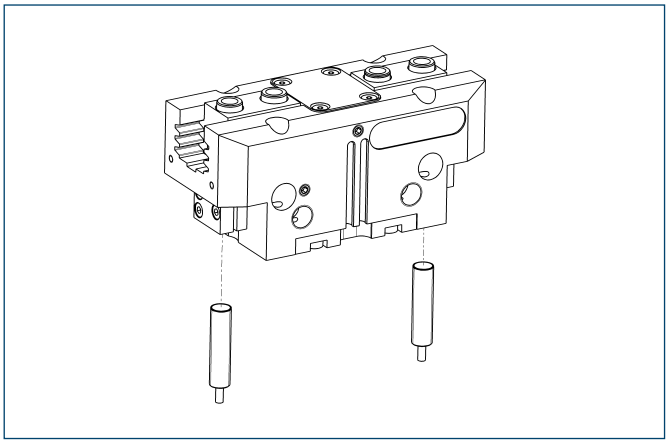

End position monitoring mounted with mounting kit

| Description | ID |
|---|---|
| Mounting kit for proximity switch | |
| AS-RMS 80 PGN/PZN-plus 64/80 | **0377725** |
| Reed Switches | |
| RMS 80-S-M8 | **0377721** |

ⓘ Two sensors (closer/NO) are required for each gripper, plus extension cables as an option.
ⓘ This mounting kit needs to be ordered optionally as an accessory.
ⓘ Please note the minimum permitted bending radii for the sensor cables, which are generally 35 mm.

## Analog position sensor

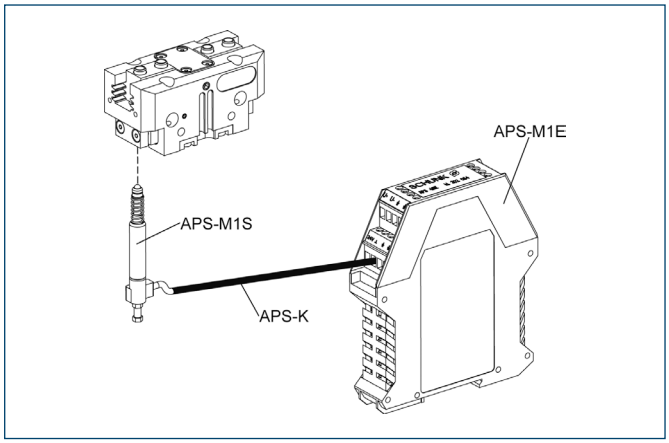


Analog multi position monitoring for any desired positions

| Description | ID |
|---|---|
| Mounting kit | |
| AS-APS-M1-80/1 | **0302077** |
| AS-APS-M1-80/2 | **0302078** |
| Connection cables | |
| APS-K0200 | **0302066** |
| APS-K0700 | **0302068** |
| Electronic Processor | |
| APS-M1E | **0302064** |
| Sensor | |
| APS-M1S | **0302062** |

ⓘ When using an APS system, for each gripper a mounting kit (AS-APS), an APS sensor (APS-M 1S, incl. 3 m cable) as well as an electronics (APS-M1e) are required.
ⓘ An extension cable (APS-K) can be connected between the sensor and the electronics as an option. The max. cable length between the sensor and the electronics is 10 m, between the electronics and their control unit (PLC) it is max. 1 m.

You can find more detailed information and individual parts of the above-mentioned accessories in the “Accessories” catalog section.

## Flexible Position Sensor

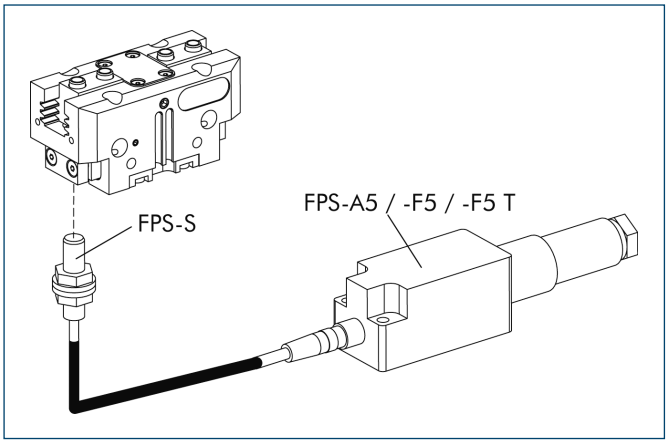


Flexible position monitoring of up to five positions

| Description | ID |
|---|---|
| Mounting kit for FPS | |
| AS-PGN/PZN-plus 64/1, PGN/PZN-plus 80/2 | **0301630** |
| AS-PGN-plus/PZN-plus 80/1, PZB 80/100 | **0301632** |
| Electronic Processor | |
| FPS-F5 | **0301805** |
| FPS-F5 T | **0301807** |
| Sensor | |
| FPS-S M8 | **0301704** |

ⓘ When using a FPS system, a FPS sensor (FPS-S) and a control unit (FPS-F5 / F5 T or A5) are required for each gripper as well as a mounting kit (AS), if listed. Cable extensions (KV) are available as options in the “Accessories” catalog section.

You can find more detailed information and individual parts of the above-mentioned accessories in the “Accessories” catalog section.

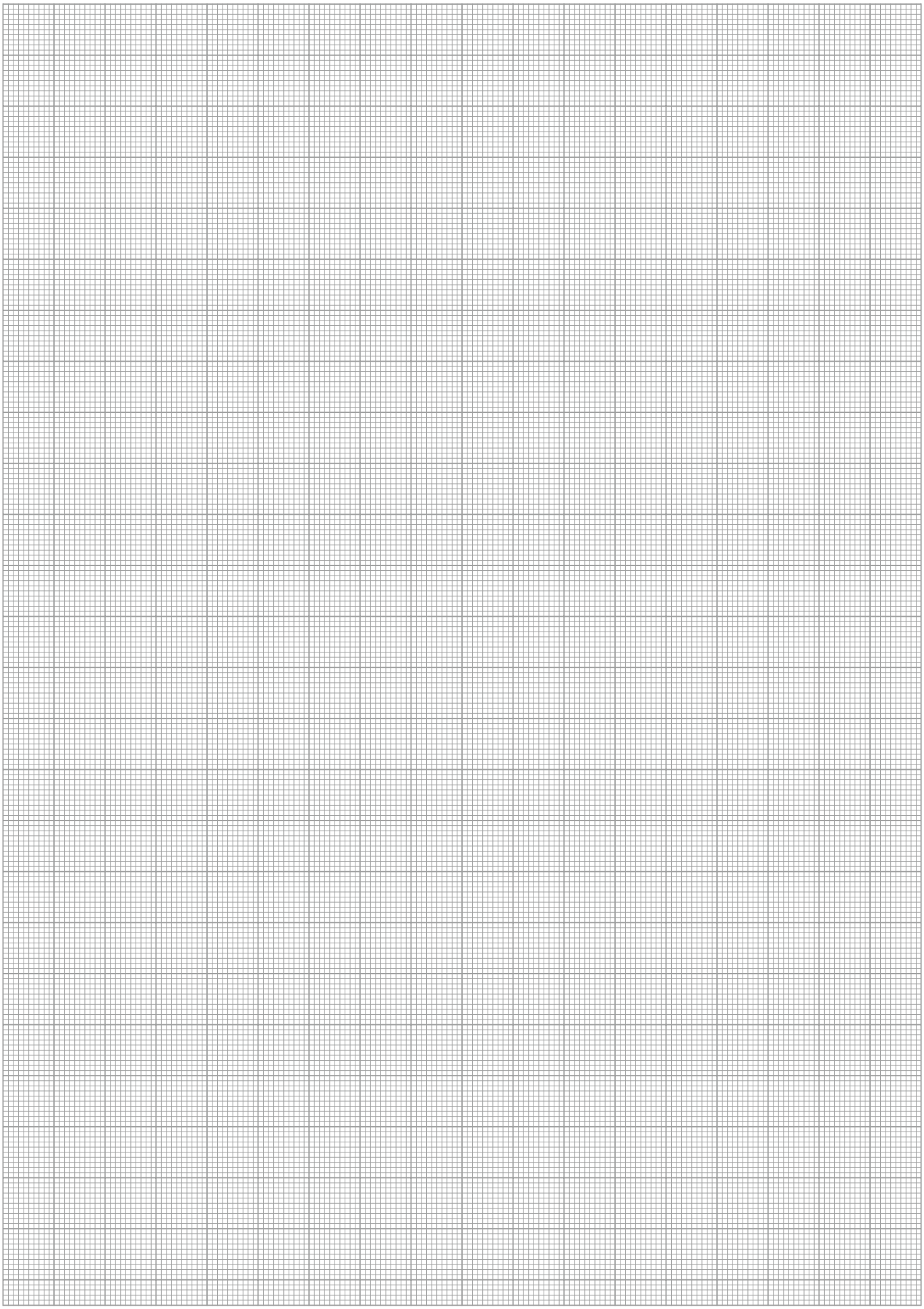

# PGN-plus 100

**Pneumatic • 2-Finger Parallel Gripper • Universal Gripper**

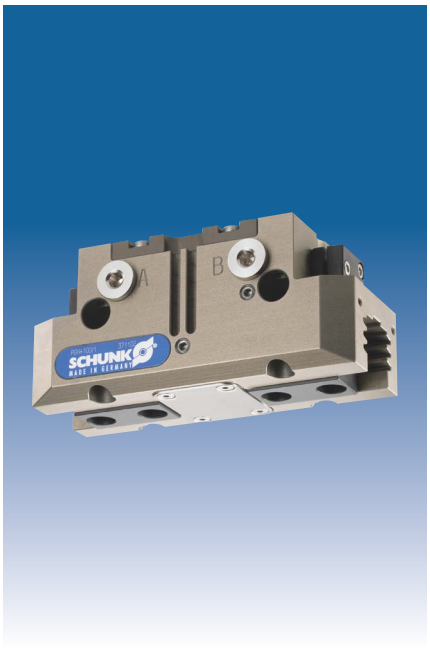

## Gripping force, I.D. gripping

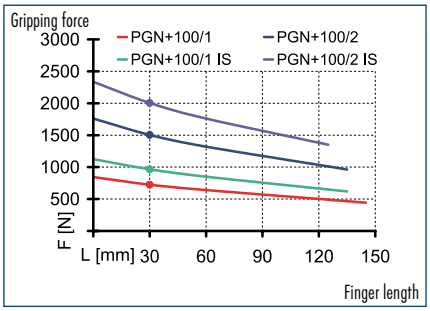


## Gripping force, O.D. gripping

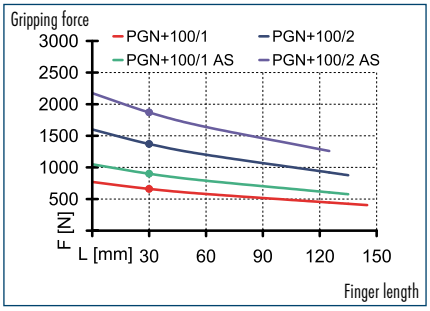


## Finger load

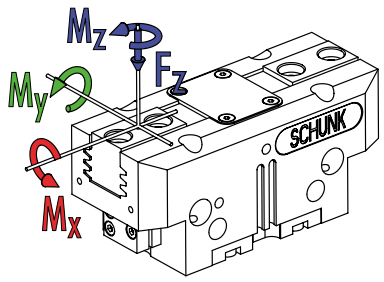


- $M_x$ max. 80.00 Nm
- $M_y$ max. 115.00 Nm
- $M_z$ max. 70.00 Nm
- $F_z$ max. 2000.0 N

ⓘ The indicated moments and forces are static values, apply per base jaw and may occur simultaneously. $M_y$ may arise in addition to the moment generated by the gripping force itself. If the max. permitted finger weight is exceeded, it is imperative to throttle the air pressure so that the jaw movement occurs without any hitting or bouncing. Service life may be reduced.

## Technical data

| Description | | PGN-plus 100-1 | PGN-plus 100-2 | PGN-plus 100-1-AS | PGN-plus 100-2-AS | PGN-plus 100-1-IS | PGN-plus 100-2-IS |
|---|---|---|---|---|---|---|---|
| **ID** | | **0371102** | **0371152** | **0371402** | **0371452** | **0371462** | **0371472** |
| Stroke per finger | [mm] | 10 | 5 | 10 | 5 | 10 | 5 |
| Closing force | [N] | 660 | 1370 | 900 | 1870 | | |
| Opening force | [N] | 725 | 1500 | | | 965 | 1740 |
| Min. spring force | [N] | | | 240 | 500 | 240 | 500 |
| Weight | [kg] | 0.81 | 0.81 | 1 | 1 | 1 | 1 |
| Recommended workpiece weight | [kg] | 3.3 | 6.85 | 3.3 | 6.85 | 3.3 | 6.85 |
| Air consumption per double stroke | [cm³] | 40 | 40 | 85 | 85 | 85 | 85 |
| Min./max. operating pressure | [bar] | 2.5/8 | 2.5/8 | 4/6.5 | 4/6.5 | 4/6.5 | 4/6.5 |
| Nominal operating pressure | [bar] | 6 | 6 | 6 | 6 | 6 | 6 |
| Closing/opening time | [s] | 0.07/0.07 | 0.07/0.07 | 0.05/0.09 | 0.05/0.09 | 0.09/0.05 | 0.09/0.05 |
| Max. permitted finger length | [mm] | 145 | 135 | 135 | 125 | 135 | 125 |
| Max. permitted weight per finger | [kg] | 1.1 | 1.1 | 1.1 | 1.1 | 1.1 | 1.1 |
| IP class | | 40 | 40 | 40 | 40 | 40 | 40 |
| Min./max. ambient temperature | [°C] | -10/90 | -10/90 | -10/90 | -10/90 | -10/90 | -10/90 |
| Repeat accuracy | [mm] | 0.01 | 0.01 | 0.01 | 0.01 | 0.01 | 0.01 |
| Cleanroom class ISO-classification 14644-1 | | 5 | 5 | 5 | 5 | 5 | 5 |
| **OPTIONS and their characteristics** | | | | | | | |
| Dust-protection version | | **37371102** | **37371152** | **37371402** | **37371452** | **37371462** | **37371472** |
| IP class | | 64 | 64 | 64 | 64 | 64 | 64 |
| Weight | [kg] | 0.99 | 0.99 | 1.18 | 1.18 | 1.18 | 1.18 |
| Anti-corrosion version | | **38371102** | **38371152** | **38371402** | **38371452** | **38371462** | **38371472** |
| High-temperature version | | **39371102** | **39371152** | **39371402** | **39371452** | **39371462** | **39371472** |
| Min./max. ambient temperature | [°C] | -10/130 | -10/130 | -10/130 | -10/130 | -10/130 | -10/130 |
| Force intensified version | | **PGN-plus 100-1-KVZ** | **PGN-plus 100-2-KVZ** | **PGN-plus 100-1-AS-KVZ** | | **PGN-plus 100-1-IS-KVZ** | |
| ID | | **0372102** | **0372152** | **0372402** | | **0372462** | |
| Closing force | [N] | 1190 | 2465 | 1430 | | | |
| Opening force | [N] | 1305 | 2700 | | | 1545 | |
| Weight | [kg] | 1.05 | 1.05 | 1.3 | | 1.3 | |
| Maximum pressure | [bar] | 6 | 6 | 6 | | 6 | |
| Max. permitted finger length | [mm] | 125 | 100 | 100 | | 100 | |
| Precision version | | **0371124** | **0371174** | **0371424** | **0371439** | | |

## Main view

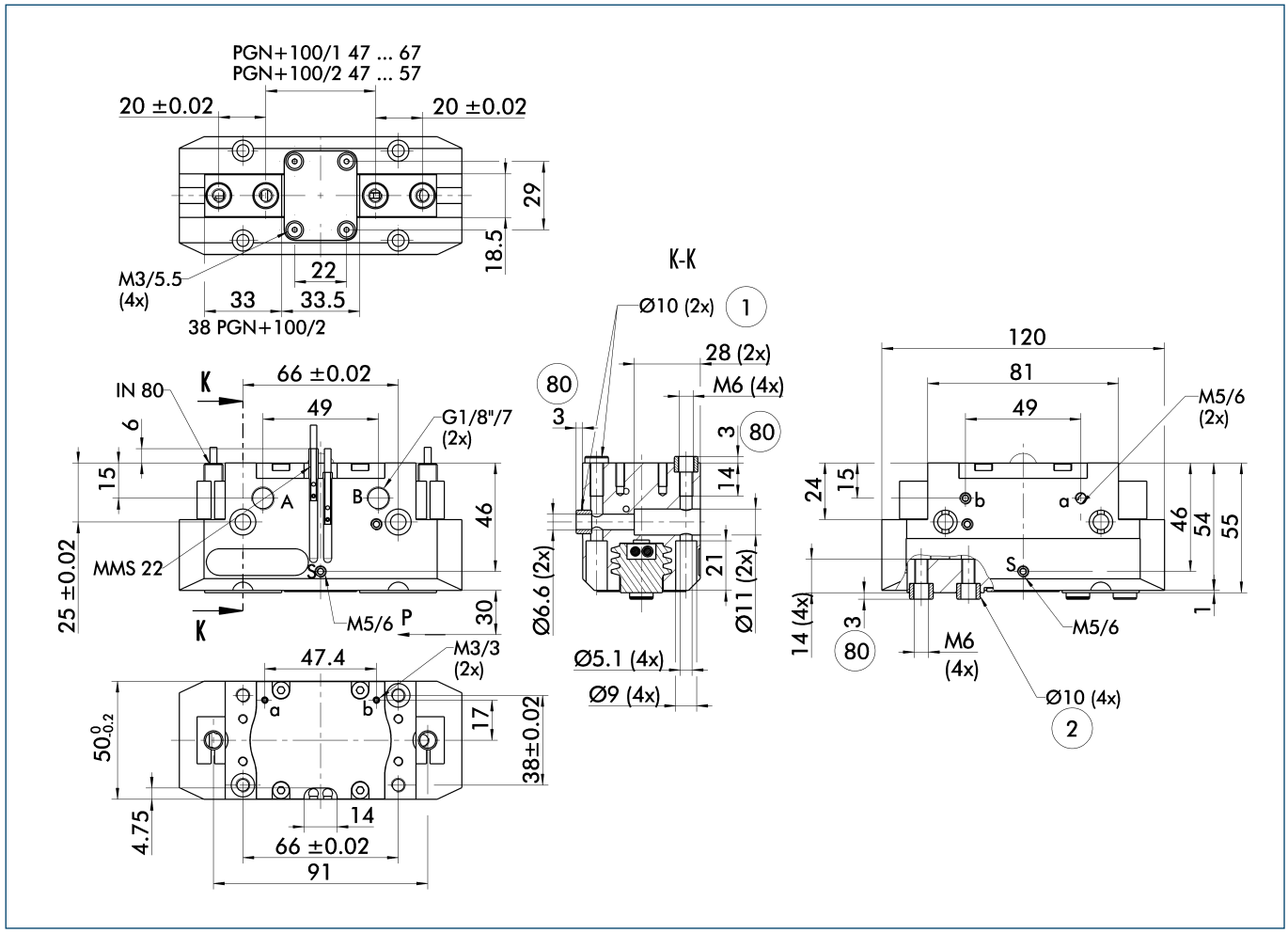


The drawing shows the gripper in the basic version with closed jaws, the dimensions do not include the options described below.

ⓘ The SDV-P pressure maintenance valve can also be used for I.D. or O.D. gripping alternatively or in addition to the spring-loaded, mechanical gripping force maintenance device (see "Accessories" catalog section).

A, a Main/direct connection, gripper opening
B, b Main/direct connection, gripper closing
S Air purge connection
① Gripper connection
② Finger connection
⑧⓪ Depth of the centering sleeve hole in the matching part

## Hose-free direct connection

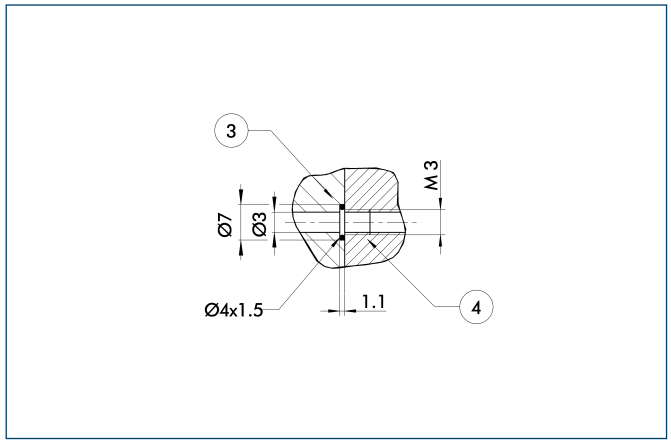


③ Adapter
④ Gripper

The direct connection is used for supplying compressed air without hoses. Instead, the pressure medium is fed through bore-holes in the mounting plate.

## AS/IS gripping force maintenance device

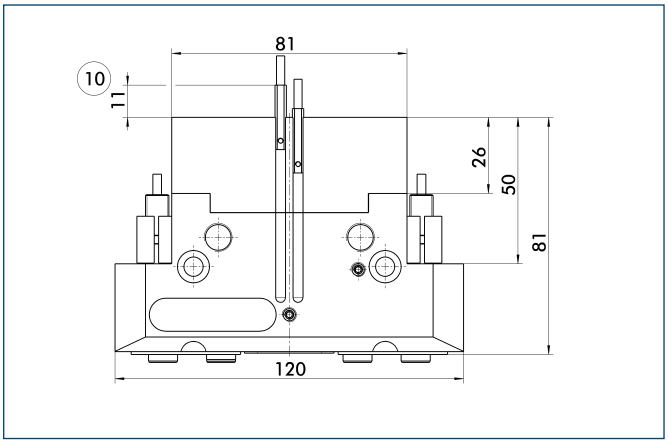


⑩ Projection applies only for AS version

The mechanical gripping force maintenance device ensures a minimum gripping force even in case of pressure drop. This acts as closing force in the AS version, and as opening force in the IS version. In addition, the gripping force maintenance device can also be used for increasing the gripping force or for single-acting gripping.

## Dust-protection version

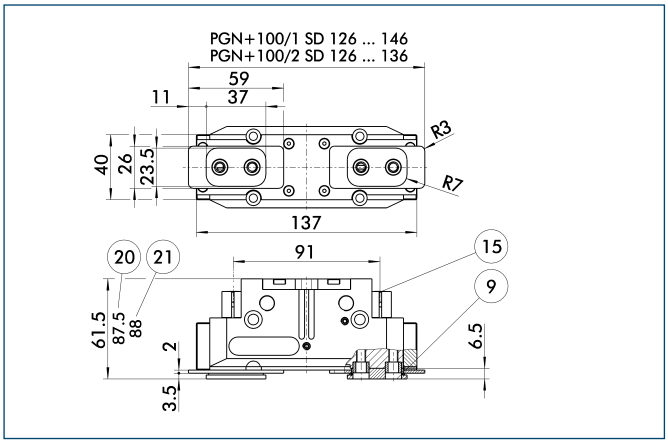


⑨ For mounting screw connection diagram, see basic version
⑮ Sealing bolt
⑳ For AS / IS version
㉑ Applies for KVZ version

The "dust-protection" option increases the degree of protection against penetrating substances. The screw connection diagram shifts by the height of the intermediate jaw. The finger length is still measured from the upper edge of the gripper housing.

## Force intensified version

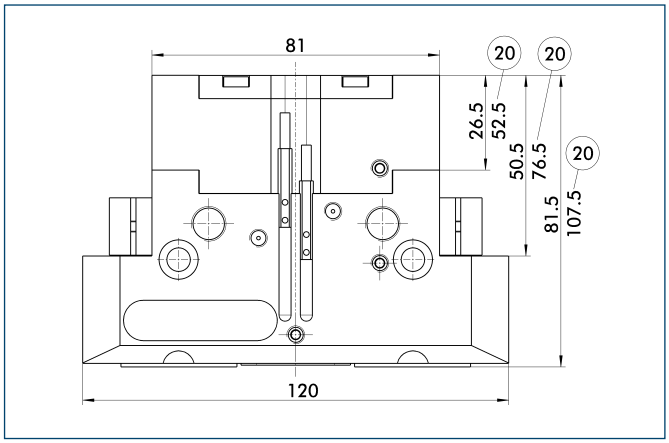


⑳ For AS / IS version

The KVZ cylinder increases the gripping forces during opening and closing. A second, in series-connected piston also increases the force on the wedge hook. The full gripping force shown in the data table is sometimes only reached after a few hundred gripping cycles. Please consider that grippers which are equipped with a gripping force maintenance device (AS / IS) are higher.

## Precision version

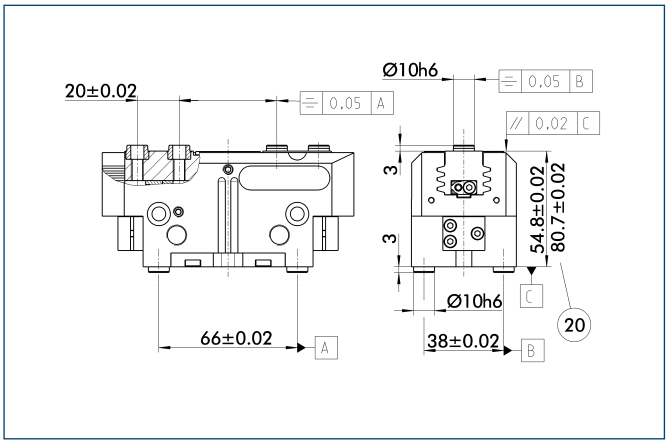


⑳ For AS / IS version

The indicated tolerances just refer to the types of precision versions shown in the chart of technical specifications. All other types of precision versions are available on request.

## Modular Assembly Automation

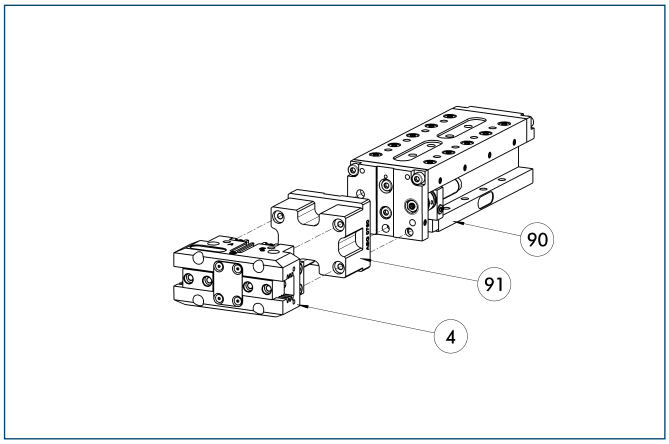


④ Gripper
⑨⓪ CLM
⑨① ASG

This gripper can be combined with the standard linear modules LM, KLM, CLM and ELM of the GEMOTEC modular system. For more information see our main catalog "Modular Assembly Automation".

## Maximum permitted finger projection

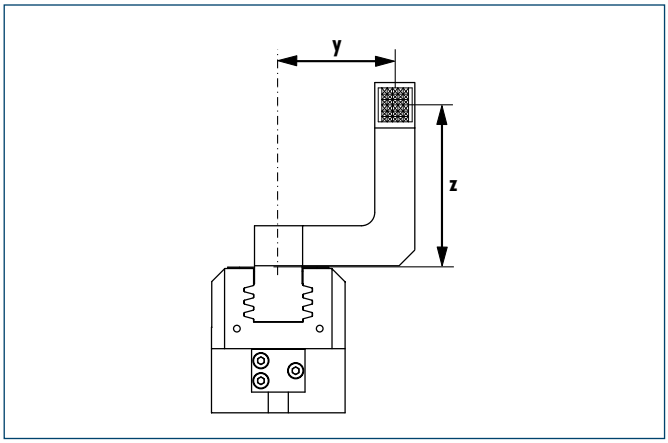


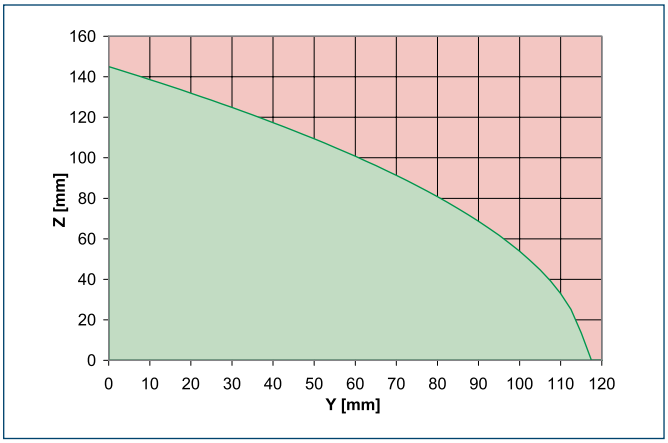


Permitted range
Inadmissible range

The curve applies to the basic version (stroke -1). For other versions, the curve will be parallel but offset in line with the max. permitted finger length.

## Protection cover

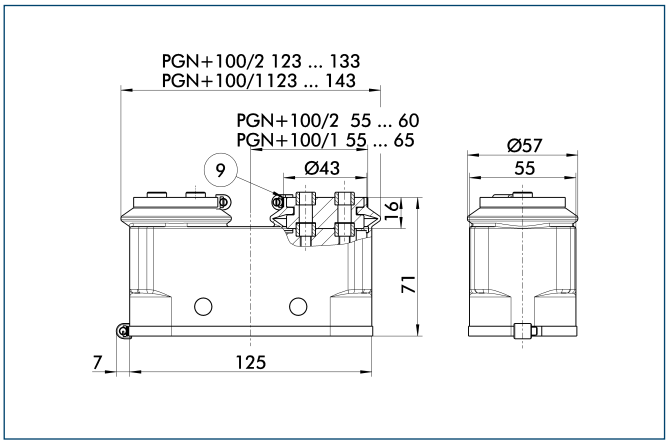


⑨ For mounting screw connection diagram, see basic version

The HUE protective cover completely protects the gripper against external influences up to IP65 if an additional sealing of the cover bottom is provided as part of the application. The mounting diagram shifts by the height of the intermediate jaw.

| Description | ID | Cleanroom class ISO-classification 14644-1 |
|---|---|---|
| Protection cover | | |
| HUE PGN-plus 100 | **0371482** | 2 |

## Quick-change Jaw System

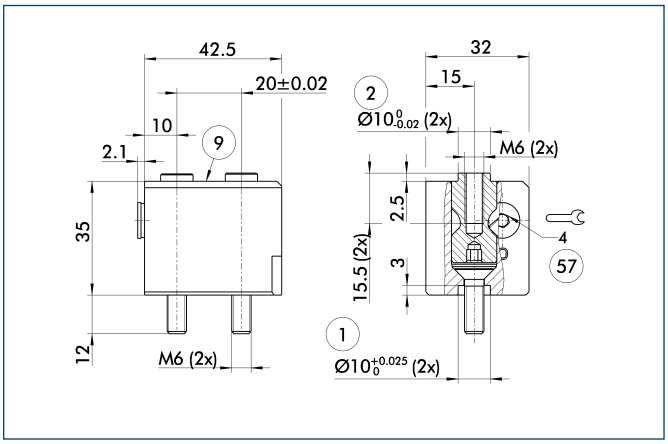


① Gripper connection
② Finger connection
⑨ For mounting screw connection diagram, see basic version
57 Locking

The BSWS quick-change jaw system enables top jaws to be changed on the gripper manually and rapidly. An adapter (BSWS-A) and a base (BSWS-B) are required for each gripper jaw.
For a reverse assembly without height set-up, one adapter (BSWS-A) and a kit (BSWS-U) per gripper jaw are required. Another effect of the BSWS-U is, that there are no disturbing fastening bores in the finger contour.

| Description | ID |
|---|---|
| Quick-change Jaw System adapter | |
| BSWS-A 100 | **0303026** |
| Quick-change Jaw System base | |
| BSWS-B 100 | **0303027** |
| Quick-change Jaw System reversed | |
| BSWS-U 100 | **0303043** |

You can find more detailed information and individual parts of the above-mentioned accessories in the “Accessories” catalog section.

## Universal intermediate jaw

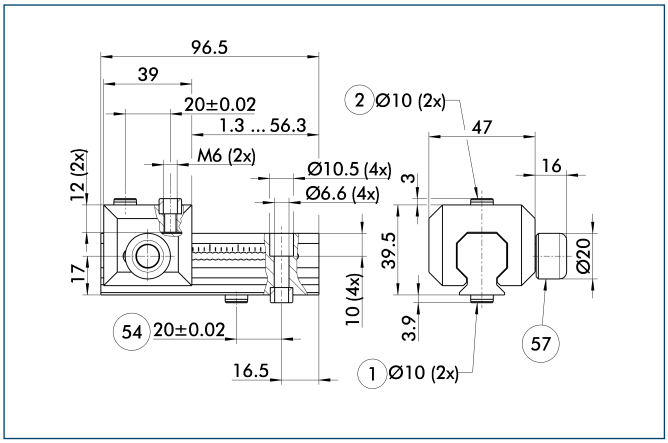


① Gripper connection
② Finger connection
54 Optional right or left connection
57 Locking

The universal intermediate jaw allows fast tool-free and reliable plugging and shifting of top jaws at the gripper.

| Description | ID | Grid dimension |
|---|---|---|
| Universal intermediate jaw | | |
| UZB 100 | **0300044** | 2.5 mm |
| UZB-S 100 | **5518272** | 2.5 mm |

ⓘ The slide UZB-S can be removed completely and has to be ordered separately. Moreover, it allows a fast jaw change.

## Force measuring jaws

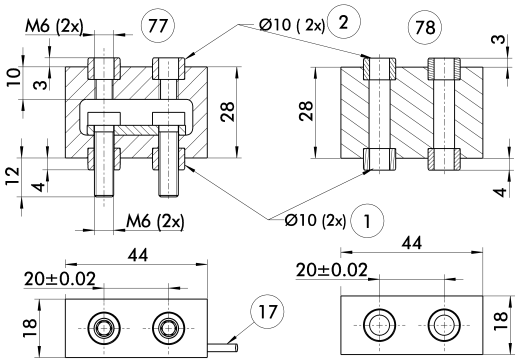


① Gripper connection
② Finger connection
17 Cable outlet
77 Active intermediate jaws
78 Passive intermediate jaws

Force measuring jaws measure gripping forces, but can also determine workpiece weights or dimensional deviations. There are active and passive intermediate jaws (FMS-ZBA or FMS-ZBP). At least one active force measuring jaw is required per gripper, the rest can be passive. For each active jaw, a FMS-A1 control unit and a FMS-A connection cable are required.

| Description | ID |
|---|---|
| Active intermediate jaws | |
| FMS-ZBA 100 | **0301836** |
| Passive intermediate jaws | |
| FMS-ZBP 100 | **0301837** |
| Electronic Processor | |
| FMS-A1 | **0301810** |
| Connection cables | |
| FMS-AK0200 | **0301820** |
| FMS-AK0500 | **0301821** |
| FMS-AK1000 | **0301822** |
| FMS-AK2000 | **0301823** |

## Finger blanks

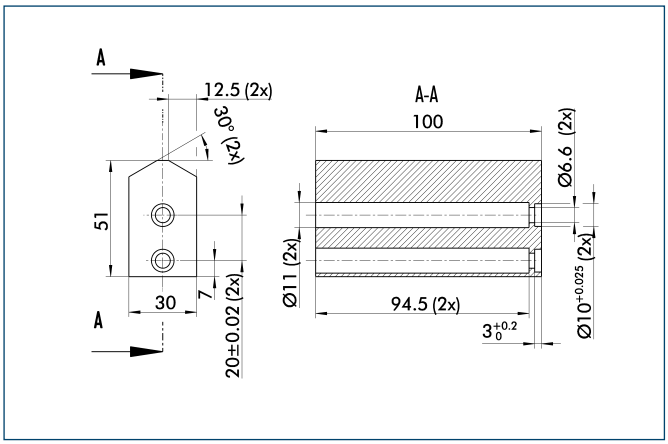


Finger blanks for customized subsequent machining

| Description | ID | Material | Scope of delivery |
|---|---|---|---|
| Finger blanks | | | |
| ABR-plus 100 | **0300012** | Aluminum | 1 |
| SBR-plus 100 | **0300022** | 16 MnCr 5 | 1 |

You can find more detailed information and individual parts of the above-mentioned accessories in the “Accessories” catalog section.

## Tolerance compensation unit

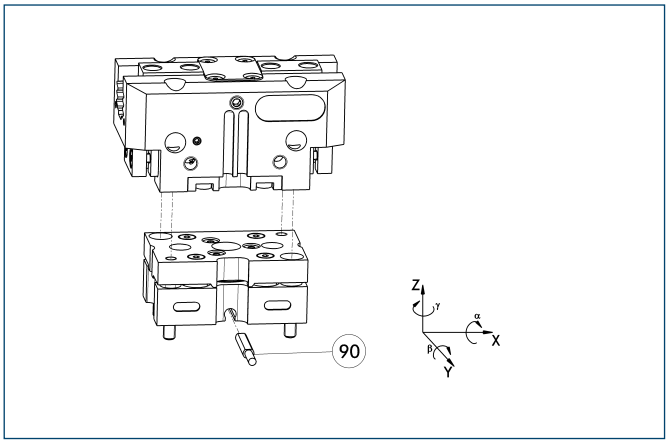


90 Monitoring of locking

Grippers can be directly mounted without an adapter plate. Tolerance compensation unit and gripper have an identical screw connection diagram. Therefore the tolerance compensation units can be assembled later. Please consider the additional assembly height of the tolerance compensation unit. For details see catalog “Robot Accessories”.

| Description | ID | Locking | Deflection |
|---|---|---|---|
| Compensation unit | | | |
| TCU-100-2-MV-P | **0324808** | Yes | ±1.5°/±1°/±1.2° |
| TCU-100-3-OV-P | **0324811** | No | ±1.5°/±1°/±1.2° |

## Compensation unit with spring reset

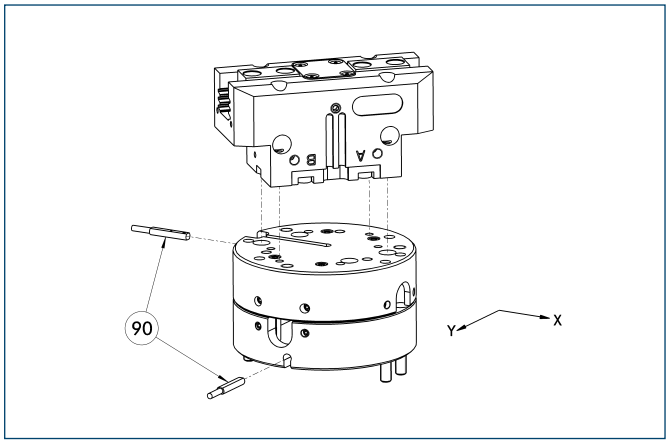


90 Monitoring

Grippers can be directly mounted without using an adapter plate. For details see our catalog “Robot Accessories”.

| Description | ID | Compensation travel | Reset force |
|---|---|---|---|
| Compensation unit | | | |
| AGE-F-XY-080-1 | **0324960** | ±5 mm | 28.3 N |
| AGE-F-XY-080-2 | **0324961** | ±5 mm | 42.5 N |
| AGE-F-XY-080-3 | **0324962** | ±5 mm | 47.6 N |

## Attachment valves

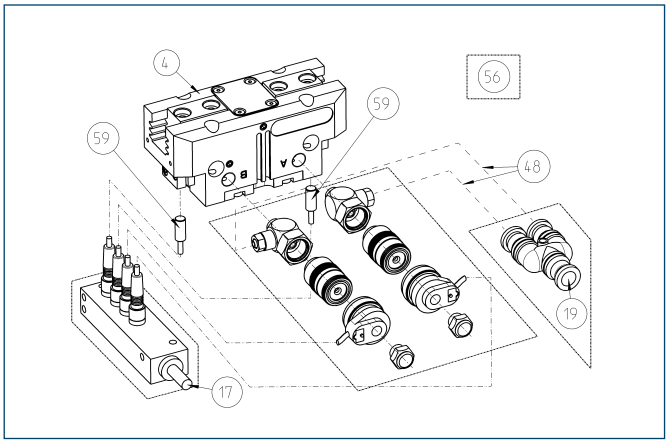


4 Gripper
17 Cable outlet
19 Air connection
48 Hose
56 Included in delivery
59 Monitoring “gripping”

For each gripper one attachment valve ABV is required, optional with distributor for sensors and valves. Attachment valves increase the efficiency, reduce the installation work and air consumption and simplify air supply. For details please refer to the “Accessories” catalog section.

| Description | ID |
|---|---|
| Attachment valves | |
| ABV-MV30-G1/8 | **0303328** |
| ABV-MV30-G1/8-V2-M8 | **0303396** |
| ABV-MV30-G1/8-V4-M8 | **0303366** |
| ABV-MV30-G1/8-V8-M8 | **0303367** |

## Programmable magnetic switch

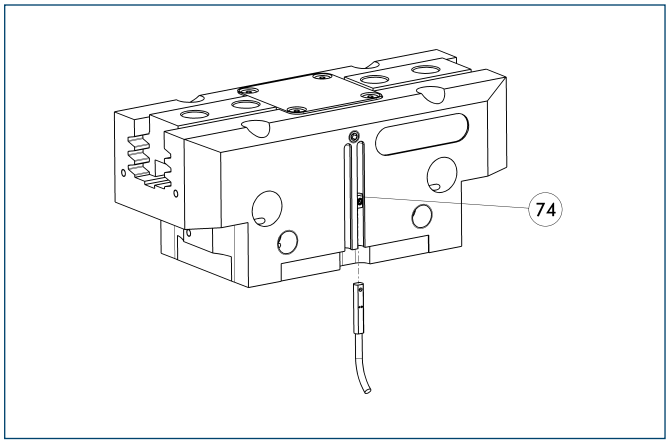


74 Stop for MMS-P

Position monitoring with two programmable positions per sensor. The end position monitoring is mounted in the C-slot.

| Description | ID | Recommended product |
|---|---|---|
| Programmable magnetic switch | | |
| MMS-P 22-S-M8-PNP | **0301370** | • |
| MMSK-P 22-S-PNP | **0301371** | |
| Connection cables | | |
| KA BG08-L 4P-0500 | **0307767** | |
| KA BG08-L 4P-1000 | **0307768** | |
| KA BW08-L 4P-0500 | **0307765** | |
| KA BW08-L 4P-1000 | **0307766** | |
| Sensor Distributor | | |
| V2-M8-4P-2XM8-3P | **0301380** | |

ⓘ Please note the minimum permitted bending radii for the sensor cables, which are generally 35 mm.
ⓘ Per gripper one sensor (closer/NO) is required, optionally a cable extension.

You can find more detailed information and individual parts of the above-mentioned accessories in the “Accessories” catalog section.

## Electronic magnetic switches

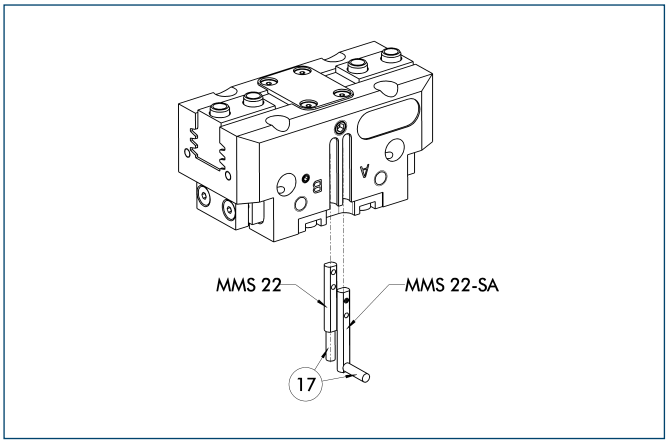


⑰ Cable outlet

End position monitoring for mounting in the C-slot

| Description | ID | Recommended product |
|---|---|---|
| Electronic magnetic switches | | |
| MMS 22-S-M5-PNP | **0301438** | |
| MMS 22-S-M5-NPN | **0301439** | |
| MMS 22-S-M8-PNP | **0301432** | • |
| MMS 22-S-M8-NPN | **0301433** | |
| MMSK 22-S-PNP | **0301434** | |
| MMSK 22-S-NPN | **0301435** | |
| Electronic magnetic switches with lateral cable outlet | | |
| MMS 22-S-M5-PNP-SA | **0301448** | |
| MMS 22-S-M5-NPN-SA | **0301449** | |
| MMS 22-S-M8-PNP-SA | **0301442** | • |
| MMS 22-S-M8-NPN-SA | **0301443** | |
| MMSK 22-S-PNP-SA | **0301444** | |
| MMSK 22-S-NPN-SA | **0301445** | |
| Reed Switches | | |
| RMS 22-S-M8 | **0377720** | • |
| Connection cables | | |
| KA BG05-L 3P-0300 | **0301652** | |
| KA BG08-L 3P-0300-PNP | **0301622** | |
| KA BG08-L 3P-0500-PNP | **0301623** | |
| KA BW05-L 3P-0300 | **0301650** | |
| KA BW08-L 3P-0300-NPN | **0301602** | |
| KA BW08-L 3P-0300-PNP | **0301594** | |
| KA BW08-L 3P-0500-NPN | **9641116** | |
| KA BW08-L 3P-0500-PNP | **0301502** | |
| Cable extensions | | |
| KV BW08-SG08 3P-0030-PNP | **0301495** | |
| KV BW08-SG08 3P-0100-PNP | **0301496** | |
| KV BW08-SG08 3P-0200-PNP | **0301497** | |

ⓘ Two sensors (closer/NO) are required for each gripper, plus extension cables as an option.

ⓘ Please note the minimum permitted bending radii for the sensor cables, which are generally 35 mm.

## Inductive proximity switches

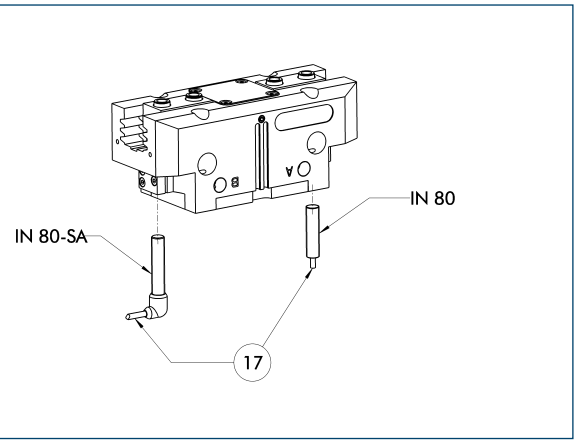


⑰ Cable outlet

End position monitoring for direct mounting

| Description | ID | Recommended product |
|---|---|---|
| Inductive proximity switches | | |
| IN 80-S-M8 | **0301478** | • |
| IN 80-S-M12 | **0301578** | |
| INK 80-S | **0301550** | |
| IN-C 80-S-M8 | **0301475** | |
| Inductive proximity switch with lateral outlet | | |
| IN 80-S-M8-SA | **0301483** | • |
| Connection cables | | |
| KA BG08-L 3P-0300-PNP | **0301622** | |
| KA BG08-L 3P-0500-PNP | **0301623** | |
| KA BG12-L 3P-0500-PNP | **30016369** | |
| KA BW08-L 3P-0300-PNP | **0301594** | |
| KA BW08-L 3P-0500-PNP | **0301502** | |
| KA BW12-L 3P-0300-PNP | **0301503** | |
| KA BW12-L 3P-0500-PNP | **0301507** | |
| Cable extensions | | |
| KV BG12-SG12 3P-0030-PNP | **0301999** | |
| KV BG12-SG12 3P-0060-PNP | **0301998** | |
| KV BW08-SG08 3P-0030-PNP | **0301495** | |
| KV BW08-SG08 3P-0100-PNP | **0301496** | |
| KV BW08-SG08 3P-0200-PNP | **0301497** | |
| KV BW12-SG12 3P-0030-PNP | **0301595** | |
| KV BW12-SG12 3P-0100-PNP | **0301596** | |
| KV BW12-SG12 3P-0200-PNP | **0301597** | |

ⓘ Two sensors (closer/NO) are required for each gripper, plus extension cables as an option.

ⓘ Please note the minimum permitted bending radii for the sensor cables, which are generally 35 mm.


You can find more detailed information and individual parts of the above-mentioned accessories in the “Accessories” catalog section.

## Cylindrical Reed Switches

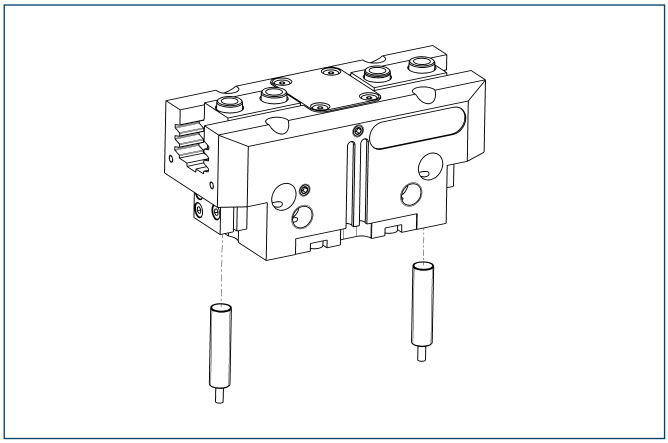

End position monitoring mounted with mounting kit

| Description | ID |
|---|---|
| Mounting kit for proximity switch | |
| AS-RMS 80 PGN/PZN-plus 100/125 | **0377726** |
| Reed Switches | |
| RMS 80-S-M8 | **0377721** |

ⓘ Two sensors (closer/NO) are required for each gripper, plus extension cables as an option.
ⓘ This mounting kit needs to be ordered optionally as an accessory.
ⓘ Please note the minimum permitted bending radii for the sensor cables, which are generally 35 mm.

## Analog position sensor

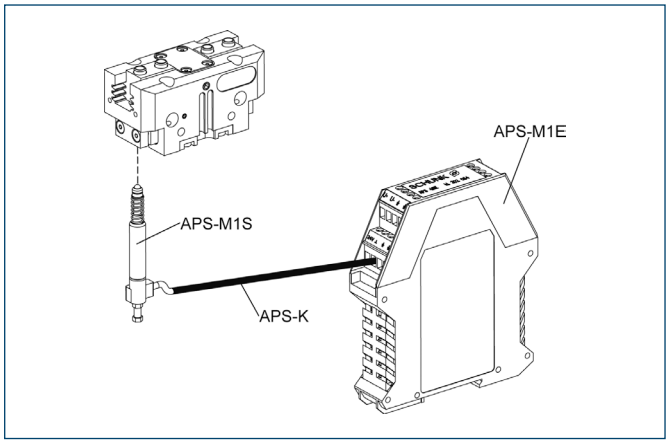


Analog multi position monitoring for any desired positions

| Description | ID |
|---|---|
| Mounting kit | |
| AS-APS-M1-100/1 | **0302079** |
| AS-APS-M1-100/2 | **0302080** |
| Connection cables | |
| APS-K0200 | **0302066** |
| APS-K0700 | **0302068** |
| Electronic Processor | |
| APS-M1E | **0302064** |
| Sensor | |
| APS-M1S | **0302062** |

ⓘ When using an APS system, for each gripper a mounting kit (AS-APS), an APS sensor (APS-M 1S, incl. 3 m cable) as well as an electronics (APS-M1e) are required.
ⓘ An extension cable (APS-K) can be connected between the sensor and the electronics as an option. The max. cable length between the sensor and the electronics is 10 m, between the electronics and their control unit (PLC) it is max. 1 m.

You can find more detailed information and individual parts of the above-mentioned accessories in the “Accessories” catalog section.

## Flexible Position Sensor

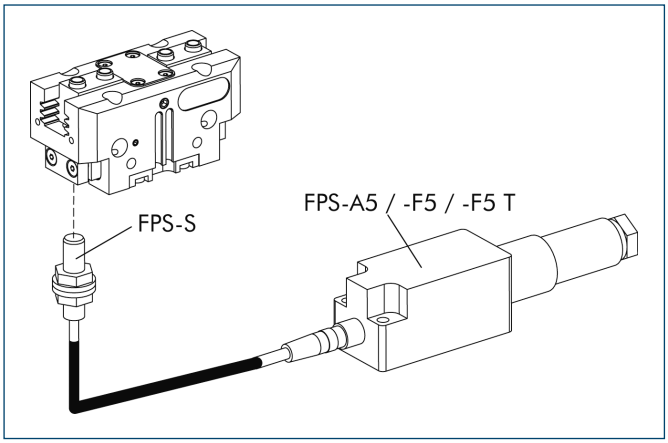


Flexible position monitoring of up to five positions

| Description | ID |
|---|---|
| Mounting kit for FPS | |
| AS-PGN/PZN-plus 100/1 | **0301634** |
| AS-PGN/PZN-plus 100/2, PZB 125 | **0301635** |
| Electronic Processor | |
| FPS-F5 | **0301805** |
| FPS-F5 T | **0301807** |
| Sensor | |
| FPS-S M8 | **0301704** |

ⓘ When using a FPS system, a FPS sensor (FPS-S) and a control unit (FPS-F5 / F5 T or A5) are required for each gripper as well as a mounting kit (AS), if listed. Cable extensions (KV) are available as options in the “Accessories” catalog section.

You can find more detailed information and individual parts of the above-mentioned accessories in the “Accessories” catalog section.

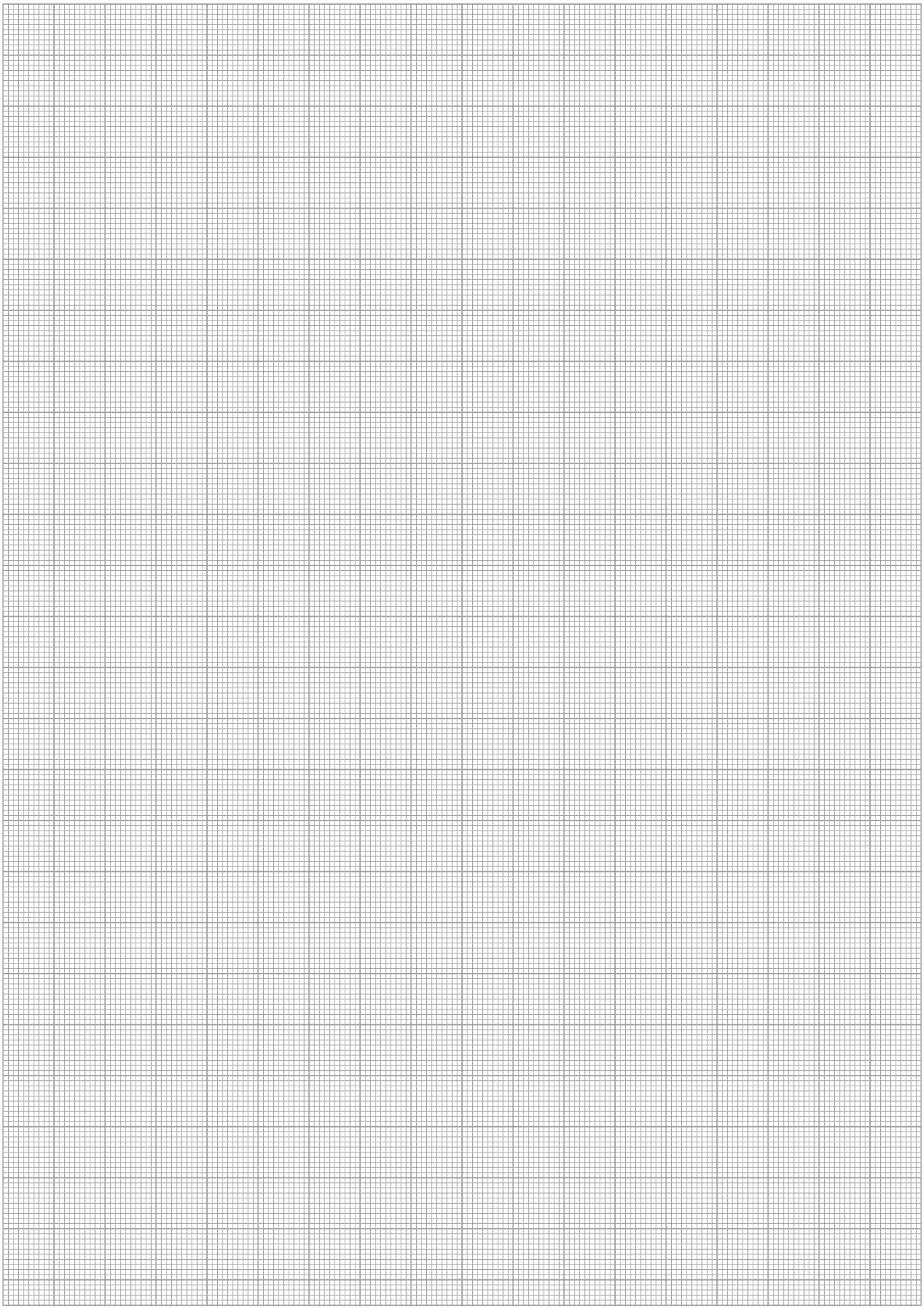

# PGN-plus 125

**Pneumatic • 2-Finger Parallel Gripper • Universal Gripper**



## Gripping force, I.D. gripping

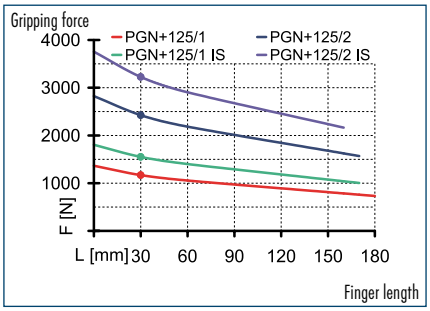


## Gripping force, O.D. gripping

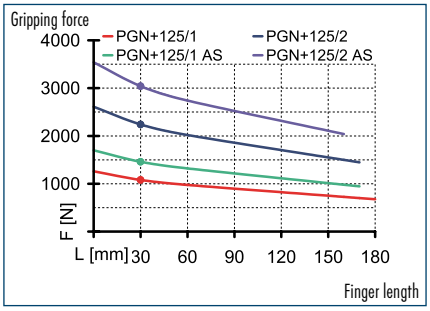


## Finger load

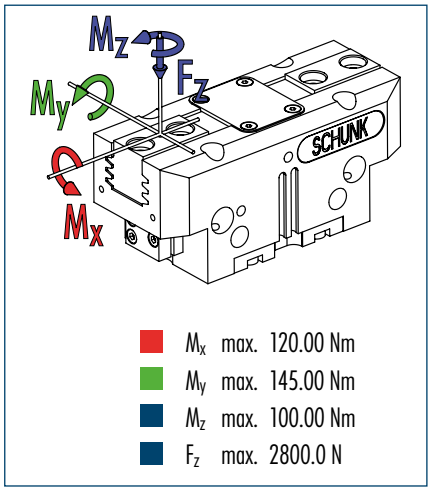


ⓘ The indicated moments and forces are static values, apply per base jaw and may occur simultaneously. $M_y$ may arise in addition to the moment generated by the gripping force itself. If the max. permitted finger weight is exceeded, it is imperative to throttle the air pressure so that the jaw movement occurs without any hitting or bouncing. Service life may be reduced.

## Technical data

| Description | | PGN-plus 125-1 | PGN-plus 125-2 | PGN-plus 125-1-AS | PGN-plus 125-2-AS | PGN-plus 125-1-IS | PGN-plus 125-2-IS |
|---|---|---|---|---|---|---|---|
| **ID** | | **0371103** | **0371153** | **0371403** | **0371453** | **0371463** | **0371473** |
| Stroke per finger | [mm] | 13 | 6 | 13 | 6 | 13 | 6 |
| Closing force | [N] | 1080 | 2240 | 1470 | 3040 | | |
| Opening force | [N] | 1170 | 2420 | | | 1560 | 3220 |
| Min. spring force | [N] | | | 390 | 800 | 390 | 800 |
| Weight | [kg] | 1.35 | 1.35 | 1.85 | 1.85 | 1.85 | 1.85 |
| Recommended workpiece weight | [kg] | 5.4 | 11.2 | 5.4 | 11.2 | 5.4 | 11.2 |
| Air consumption per double stroke | [cm³] | 81 | 81 | 158 | 158 | 158 | 158 |
| Min./max. operating pressure | [bar] | 2.5/8 | 2.5/8 | 4/6.5 | 4/6.5 | 4/6.5 | 4/6.5 |
| Nominal operating pressure | [bar] | 6 | 6 | 6 | 6 | 6 | 6 |
| Closing/opening time | [s] | 0.1/0.1 | 0.1/0.1 | 0.08/0.12 | 0.08/0.12 | 0.12/0.08 | 0.12/0.08 |
| Max. permitted finger length | [mm] | 180 | 170 | 170 | 160 | 170 | 160 |
| Max. permitted weight per finger | [kg] | 2.1 | 2.1 | 2.1 | 2.1 | 2.1 | 2.1 |
| IP class | | 40 | 40 | 40 | 40 | 40 | 40 |
| Min./max. ambient temperature | [°C] | -10/90 | -10/90 | -10/90 | -10/90 | -10/90 | -10/90 |
| Repeat accuracy | [mm] | 0.01 | 0.01 | 0.01 | 0.01 | 0.01 | 0.01 |
| Cleanroom class ISO-classification 14644-1 | | 5 | 5 | 5 | 5 | 5 | 5 |
| **OPTIONS and their characteristics** | | | | | | | |
| Dust-protection version | | **37371103** | **37371153** | **37371403** | **37371453** | **37371463** | **37371473** |
| IP class | | 64 | 64 | 64 | 64 | 64 | 64 |
| Weight | [kg] | 1.55 | 1.55 | 2.05 | 2.05 | 2.05 | 2.05 |
| Anti-corrosion version | | **38371103** | **38371153** | **38371403** | **38371453** | **38371463** | **38371473** |
| High-temperature version | | **39371103** | **39371153** | **39371403** | **39371453** | **39371463** | **39371473** |
| Min./max. ambient temperature | [°C] | -10/130 | -10/130 | -10/130 | -10/130 | -10/130 | -10/130 |
| Force intensified version | | PGN-plus 125-1-KVZ | PGN-plus 125-2-KVZ | PGN-plus 125-1-AS-KVZ | | PGN-plus 125-1-IS-KVZ | |
| ID | | **0372103** | **0372153** | **0372403** | | **0372463** | |
| Closing force | [N] | 1945 | 4030 | 2335 | | | |
| Opening force | [N] | 2105 | 4355 | | | 2495 | |
| Weight | [kg] | 1.85 | 1.85 | 2.3 | | 2.3 | |
| Maximum pressure | [bar] | 6 | 6 | 6 | | 6 | |
| Max. permitted finger length | [mm] | 180 | 125 | 125 | | 125 | |
| Precision version | | **0371125** | **0371175** | **0371425** | **0371440** | | |

## Main view

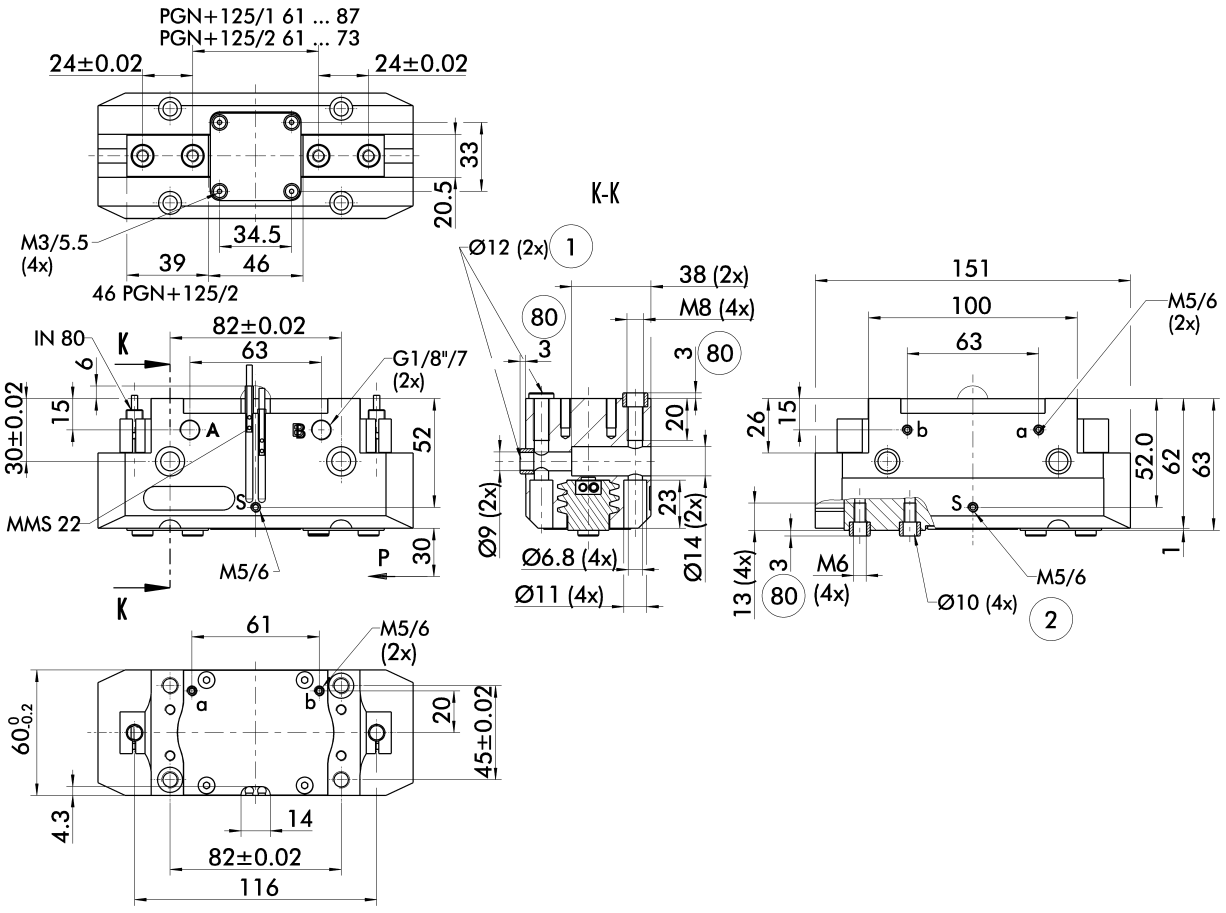


The drawing shows the gripper in the basic version with closed jaws, the dimensions do not include the options described below.

ⓘ The SDV-P pressure maintenance valve can also be used for I.D. or O.D. gripping alternatively or in addition to the spring-loaded, mechanical gripping force maintenance device (see "Accessories" catalog section).

A, a Main/direct connection, gripper opening
B, b Main/direct connection, gripper closing
S Air purge connection, or deaeration bore
① Gripper connection
② Finger connection
80 Depth of the centering sleeve hole in the matching part

## Hose-free direct connection

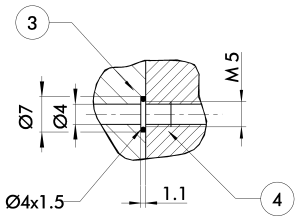


③ Adapter
④ Gripper

The direct connection is used for supplying compressed air without hoses. Instead, the pressure medium is fed through bore-holes in the mounting plate.

## AS/IS gripping force maintenance device

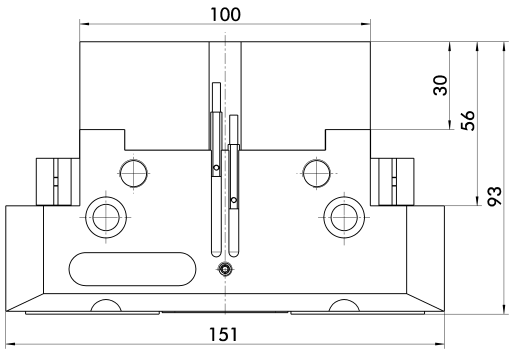


The mechanical gripping force maintenance device ensures a minimum gripping force even in case of pressure drop. This acts as closing force in the AS version, and as opening force in the IS version. In addition, the gripping force maintenance device can also be used for increasing the gripping force or for single-acting gripping.

## Dust-protection version

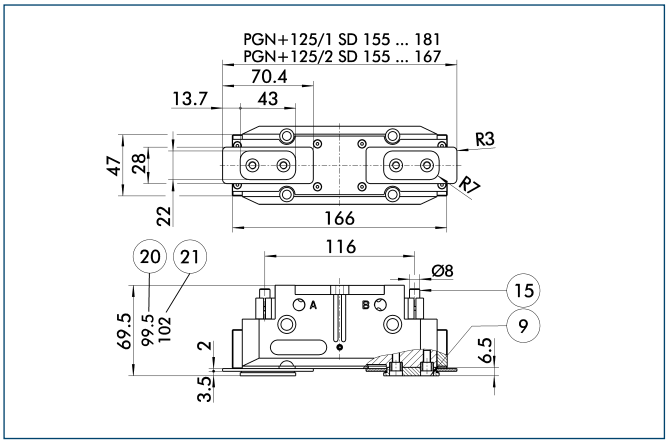


(9) For mounting screw connection diagram, see basic version
(15) Sealing bolt
(20) For AS / IS version
(21) Applies for KVZ version

The "dust-protection" option increases the degree of protection against penetrating substances. The screw connection diagram shifts by the height of the intermediate jaw. The finger length is still measured from the upper edge of the gripper housing.

## Force intensified version

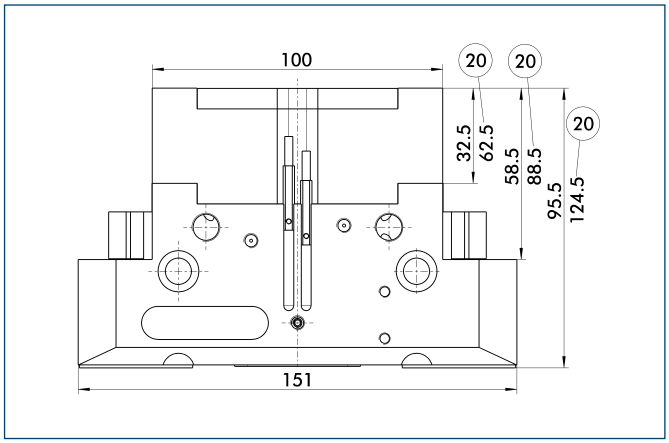


(20) For AS / IS version

The KVZ cylinder increases the gripping forces during opening and closing. A second, in series-connected piston also increases the force on the wedge hook. The full gripping force shown in the data table is sometimes only reached after a few hundred gripping cycles. Please consider that grippers which are equipped with a gripping force maintenance device (AS / IS) are higher.

## Precision version

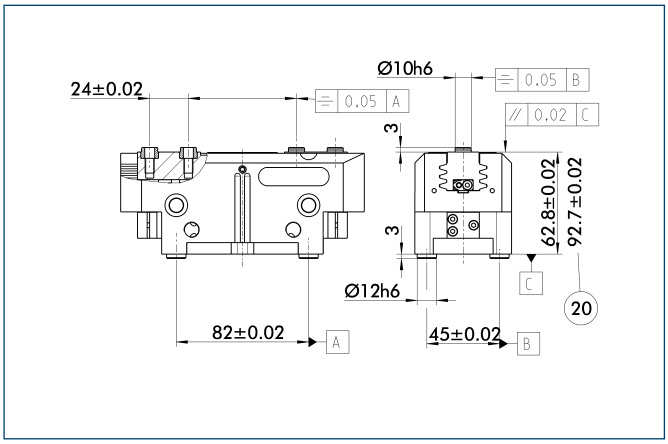


(20) For AS / IS version

The indicated tolerances just refer to the types of precision versions shown in the chart of technical specifications. All other types of precision versions are available on request.

## Modular Assembly Automation

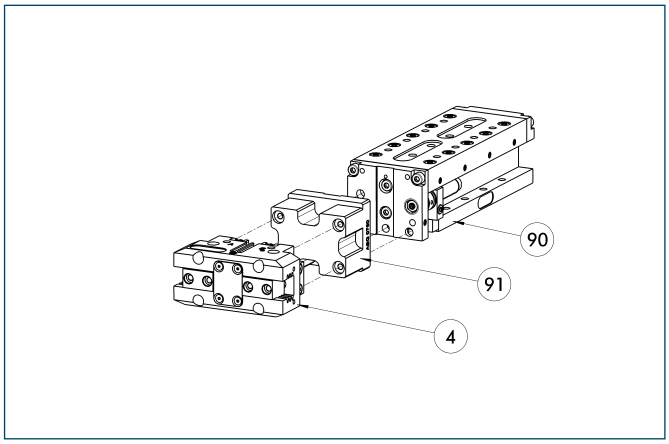


(4) Gripper
(90) CLM
(91) ASG

This gripper can be combined with the standard linear modules LM, KLM, CLM and ELM of the GEMOTEC modular system. For more information see our main catalog "Modular Assembly Automation".

## Maximum permitted finger projection

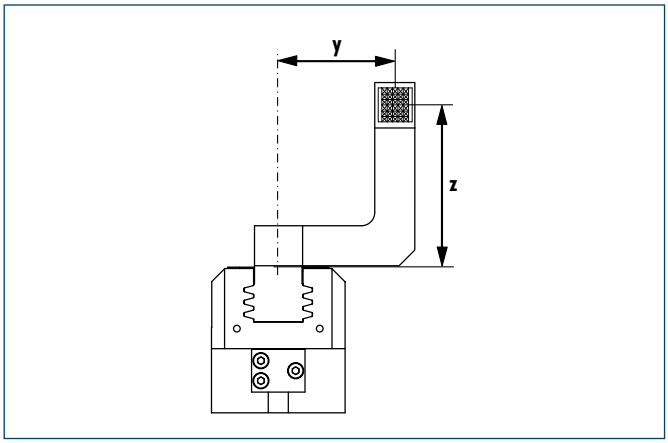


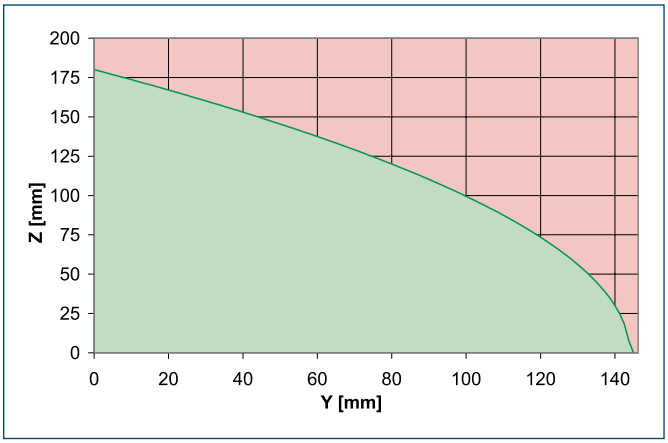


Permitted range
Inadmissible range

The curve applies to the basic version (stroke -1). For other versions, the curve will be parallel but offset in line with the max. permitted finger length.

## Protection cover

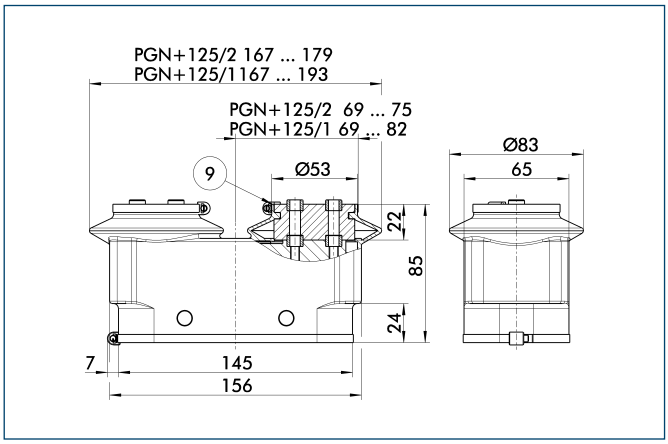


⑨ For mounting screw connection diagram, see basic version

The HUE protective cover completely protects the gripper against external influences up to IP65 if an additional sealing of the cover bottom is provided as part of the application. The mounting diagram shifts by the height of the intermediate jaw.

| Description | ID | Cleanroom class ISO-classification 14644-1 |
|---|---|---|
| Protection cover | | |
| HUE PGN-plus 125 | **0371483** | 2 |

## Quick-change Jaw System

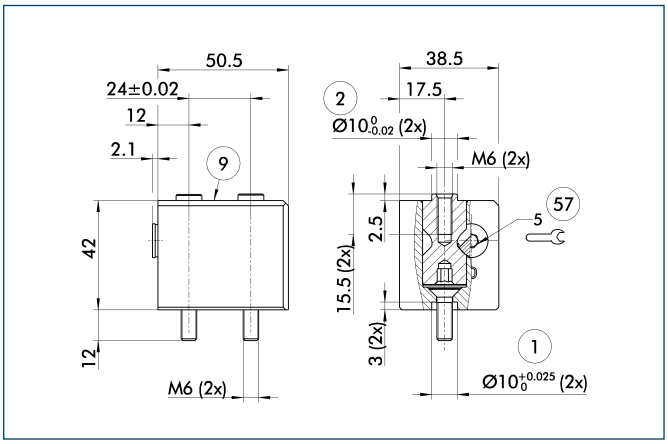


① Gripper connection
② Finger connection
⑨ For mounting screw connection diagram, see basic version
⑤⑦ Locking

The BSWS quick-change jaw system enables top jaws to be changed on the gripper manually and rapidly. An adapter (BSWS-A) and a base (BSWS-B) are required for each gripper jaw.
For a reverse assembly without height set-up, one adapter (BSWS-A) and a kit (BSWS-U) per gripper jaw are required. Another effect of the BSWS-U is, that there are no disturbing fastening bores in the finger contour.

| Description | ID |
|---|---|
| Quick-change Jaw System adapter | |
| BSWS-A 125 | **0303028** |
| Quick-change Jaw System base | |
| BSWS-B 125 | **0303029** |
| Quick-change Jaw System reversed | |
| BSWS-U 125 | **0303044** |

You can find more detailed information and individual parts of the above-mentioned accessories in the “Accessories” catalog section.

## Universal intermediate jaw

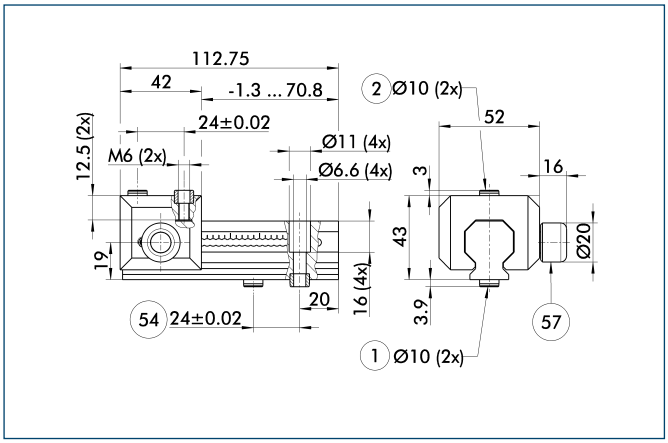


① Gripper connection
② Finger connection
54 Optional right or left connection
57 Locking

The universal intermediate jaw allows fast tool-free and reliable plugging and shifting of top jaws at the gripper.

| Description | ID | Grid dimension |
|---|---|---|
| Universal intermediate jaw | | |
| UZB 125 | **0300045** | 3 mm |
| UZB-S 125 | **5518273** | 3 mm |

ⓘ The slide UZB-S can be removed completely and has to be ordered separately. Moreover, it allows a fast jaw change.

## Force measuring jaws

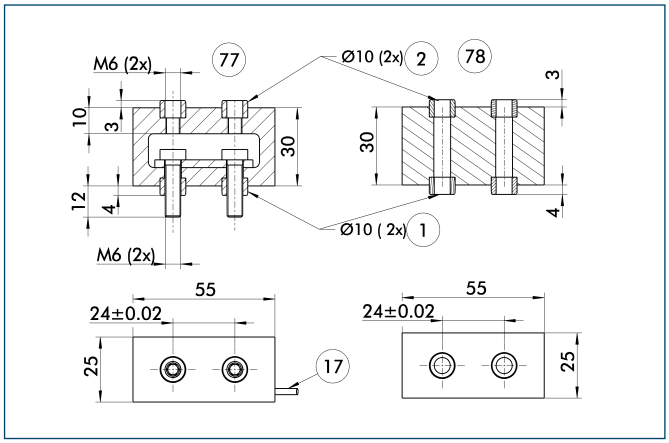


① Gripper connection
② Finger connection
17 Cable outlet
77 Active intermediate jaws
78 Passive intermediate jaws

Force measuring jaws measure gripping forces, but can also determine workpiece weights or dimensional deviations. There are active and passive intermediate jaws (FMS-ZBA or FMS-ZBP). At least one active force measuring jaw is required per gripper, the rest can be passive. For each active jaw, a FMS-A1 control unit and a FMS-A connection cable are required.

| Description | ID |
|---|---|
| Active intermediate jaws | |
| FMS-ZBA 125 | **0301838** |
| Passive intermediate jaws | |
| FMS-ZBP 125 | **0301839** |
| Electronic Processor | |
| FMS-A1 | **0301810** |
| Connection cables | |
| FMS-AK0200 | **0301820** |
| FMS-AK0500 | **0301821** |
| FMS-AK1000 | **0301822** |
| FMS-AK2000 | **0301823** |

## Finger blanks

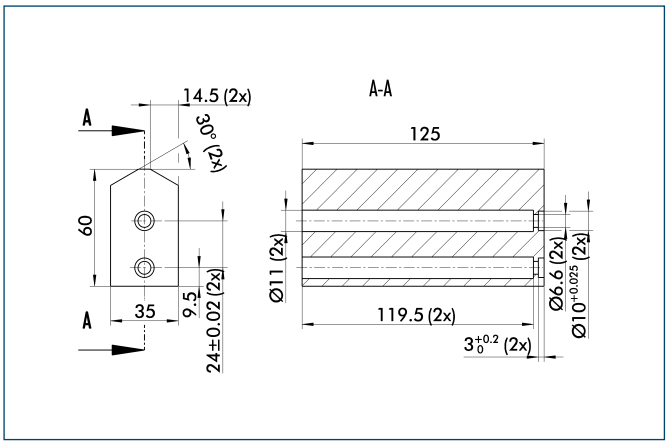


Finger blanks for customized subsequent machining

| Description | ID | Material | Scope of delivery |
|---|---|---|---|
| Finger blanks | | | |
| ABR-plus 125 | **0300013** | Aluminum | 1 |
| SBR-plus 125 | **0300023** | 16 MnCr 5 | 1 |

You can find more detailed information and individual parts of the above-mentioned accessories in the “Accessories” catalog section.

## Tolerance compensation unit

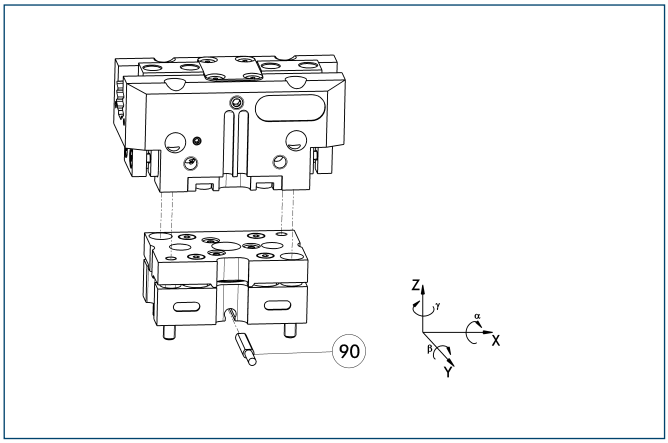


(90) Monitoring of locking

Grippers can be directly mounted without an adapter plate. Tolerance compensation unit and gripper have an identical screw connection diagram. Therefore the tolerance compensation units can be assembled later. Please consider the additional assembly height of the tolerance compensation unit. For details see catalog “Robot Accessories”.

| Description | ID | Locking | Deflection |
|---|---|---|---|
| Compensation unit | | | |
| TCU-125-3-MV-P | **0324828** | Yes | ±1.5°/±1°/±1.5° |
| TCU-125-3-OV-P | **0324829** | No | ±1.5°/±1°/±1.5° |

## Compensation unit with spring reset

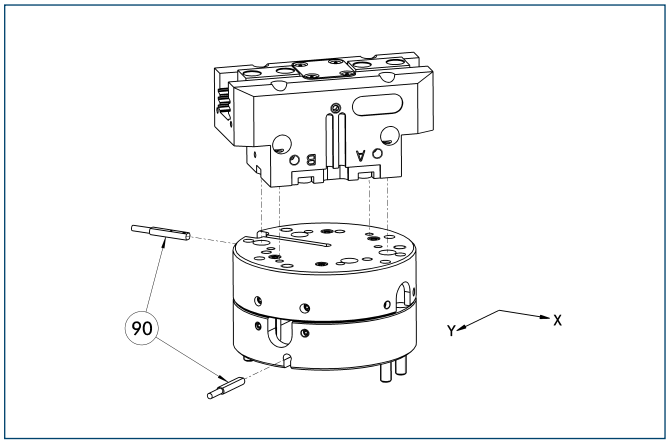


(90) Monitoring

Grippers can be directly mounted without using an adapter plate. For details see our catalog “Robot Accessories”.

| Description | ID | Compensation travel | Reset force |
|---|---|---|---|
| Compensation unit | | | |
| AGE-F-XY-080-1 | **0324960** | ±5 mm | 28.3 N |
| AGE-F-XY-080-2 | **0324961** | ±5 mm | 42.5 N |
| AGE-F-XY-080-3 | **0324962** | ±5 mm | 47.6 N |

## Attachment valves

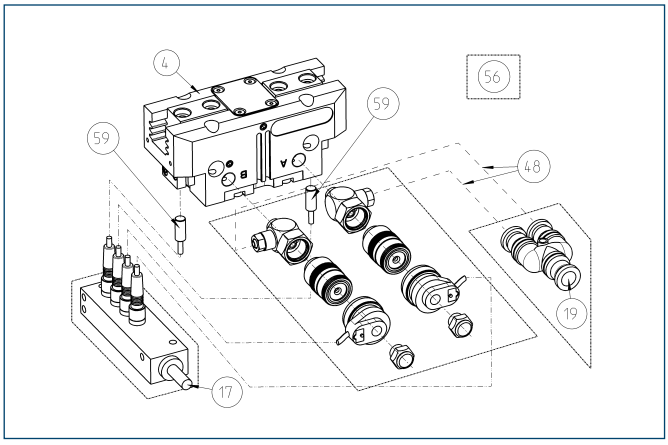


(4) Gripper
(17) Cable outlet
(19) Air connection
(48) Hose
(56) Included in delivery
(59) Monitoring “gripping”

For each gripper one attachment valve ABV is required, optional with distributor for sensors and valves. Attachment valves increase the efficiency, reduce the installation work and air consumption and simplify air supply. For details please refer to the “Accessories” catalog section.

| Description | ID |
|---|---|
| Attachment valves | |
| ABV-MV30-G1/8 | **0303328** |
| ABV-MV30-G1/8-V2-M8 | **0303396** |
| ABV-MV30-G1/8-V4-M8 | **0303366** |
| ABV-MV30-G1/8-V8-M8 | **0303367** |

## Programmable magnetic switch

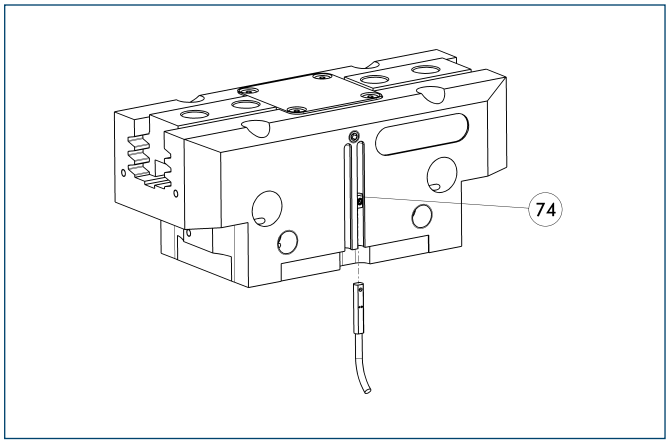


(74) Stop for MMS-P

Position monitoring with two programmable positions per sensor. The end position monitoring is mounted in the C-slot.

| Description | ID | Recommended product |
|---|---|---|
| Programmable magnetic switch | | |
| MMS-P 22-S-M8-PNP | **0301370** | • |
| MMSK-P 22-S-PNP | **0301371** | |
| Connection cables | | |
| KA BG08-L 4P-0500 | **0307767** | |
| KA BG08-L 4P-1000 | **0307768** | |
| KA BW08-L 4P-0500 | **0307765** | |
| KA BW08-L 4P-1000 | **0307766** | |
| Sensor Distributor | | |
| V2-M8-4P-2XM8-3P | **0301380** | |

ⓘ Please note the minimum permitted bending radii for the sensor cables, which are generally 35 mm.
ⓘ Per gripper one sensor (closer/NO) is required, optionally a cable extension.

You can find more detailed information and individual parts of the above-mentioned accessories in the “Accessories” catalog section.

## Electronic magnetic switches

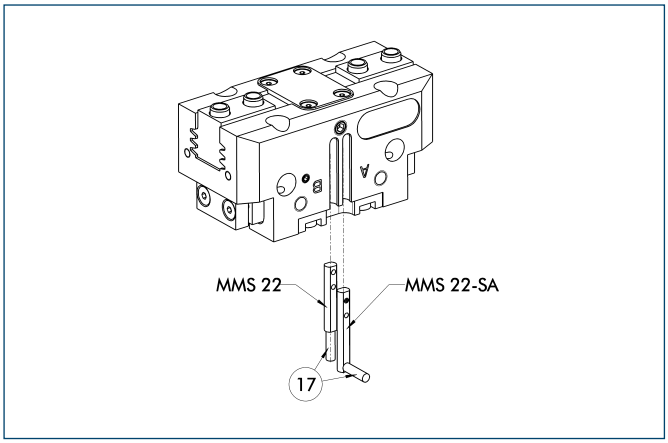


⑰ Cable outlet

End position monitoring for mounting in the C-slot

| Description | ID | Recommended product |
|---|---|---|
| Electronic magnetic switches | | |
| MMS 22-S-M5-PNP | 0301438 | |
| MMS 22-S-M5-NPN | 0301439 | |
| MMS 22-S-M8-PNP | 0301432 | • |
| MMS 22-S-M8-NPN | 0301433 | |
| MMSK 22-S-PNP | 0301434 | |
| MMSK 22-S-NPN | 0301435 | |
| Electronic magnetic switches with lateral cable outlet | | |
| MMS 22-S-M5-PNP-SA | 0301448 | |
| MMS 22-S-M5-NPN-SA | 0301449 | |
| MMS 22-S-M8-PNP-SA | 0301442 | • |
| MMS 22-S-M8-NPN-SA | 0301443 | |
| MMSK 22-S-PNP-SA | 0301444 | |
| MMSK 22-S-NPN-SA | 0301445 | |
| Reed Switches | | |
| RMS 22-S-M8 | 0377720 | • |
| Connection cables | | |
| KA BG05-L 3P-0300 | 0301652 | |
| KA BG08-L 3P-0300-PNP | 0301622 | |
| KA BG08-L 3P-0500-PNP | 0301623 | |
| KA BW05-L 3P-0300 | 0301650 | |
| KA BW08-L 3P-0300-NPN | 0301602 | |
| KA BW08-L 3P-0300-PNP | 0301594 | |
| KA BW08-L 3P-0500-NPN | 9641116 | |
| KA BW08-L 3P-0500-PNP | 0301502 | |
| Cable extensions | | |
| KV BW08-SG08 3P-0030-PNP | 0301495 | |
| KV BW08-SG08 3P-0100-PNP | 0301496 | |
| KV BW08-SG08 3P-0200-PNP | 0301497 | |

ⓘ Two sensors (closer/NO) are required for each gripper, plus extension cables as an option.

ⓘ Please note the minimum permitted bending radii for the sensor cables, which are generally 35 mm.

## Inductive proximity switches

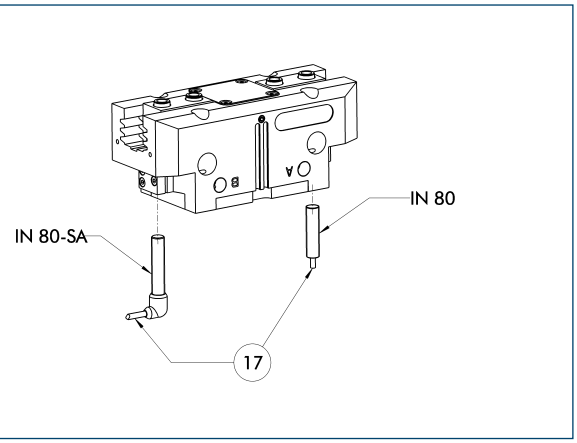


⑰ Cable outlet

End position monitoring for direct mounting

| Description | ID | Recommended product |
|---|---|---|
| Inductive proximity switches | | |
| IN 80-S-M8 | 0301478 | • |
| IN 80-S-M12 | 0301578 | |
| INK 80-S | 0301550 | |
| Inductive proximity switch with lateral outlet | | |
| IN 80-S-M12-SA | 0301587 | |
| IN 80-S-M8-SA | 0301483 | • |
| INK 80-S-SA | 0301566 | |
| Connection cables | | |
| KA BG08-L 3P-0300-PNP | 0301622 | |
| KA BG08-L 3P-0500-PNP | 0301623 | |
| KA BG12-L 3P-0500-PNP | 30016369 | |
| KA BW08-L 3P-0300-PNP | 0301594 | |
| KA BW08-L 3P-0500-PNP | 0301502 | |
| KA BW12-L 3P-0300-PNP | 0301503 | |
| KA BW12-L 3P-0500-PNP | 0301507 | |
| Cable extensions | | |
| KV BG12-SG12 3P-0030-PNP | 0301999 | |
| KV BG12-SG12 3P-0060-PNP | 0301998 | |
| KV BW08-SG08 3P-0030-PNP | 0301495 | |
| KV BW08-SG08 3P-0100-PNP | 0301496 | |
| KV BW08-SG08 3P-0200-PNP | 0301497 | |
| KV BW12-SG12 3P-0030-PNP | 0301595 | |
| KV BW12-SG12 3P-0100-PNP | 0301596 | |
| KV BW12-SG12 3P-0200-PNP | 0301597 | |

ⓘ Two sensors (closer/NO) are required for each gripper, plus extension cables as an option.

ⓘ Please note the minimum permitted bending radii for the sensor cables, which are generally 35 mm.


You can find more detailed information and individual parts of the above-mentioned accessories in the “Accessories” catalog section.

## Cylindrical Reed Switches

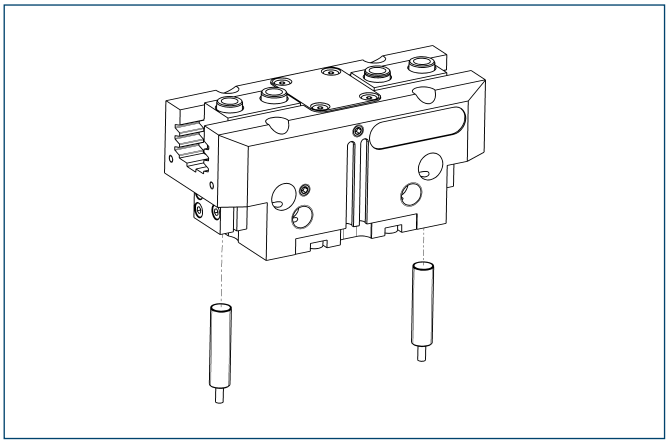

End position monitoring mounted with mounting kit

| Description | ID |
|---|---|
| Mounting kit for proximity switch | |
| AS-RMS 80 PGN/PZN-plus 100/125 | **0377726** |
| Reed Switches | |
| RMS 80-S-M8 | **0377721** |

ⓘ Two sensors (closer/NO) are required for each gripper, plus extension cables as an option.
ⓘ This mounting kit needs to be ordered optionally as an accessory.
ⓘ Please note the minimum permitted bending radii for the sensor cables, which are generally 35 mm.

## Analog position sensor

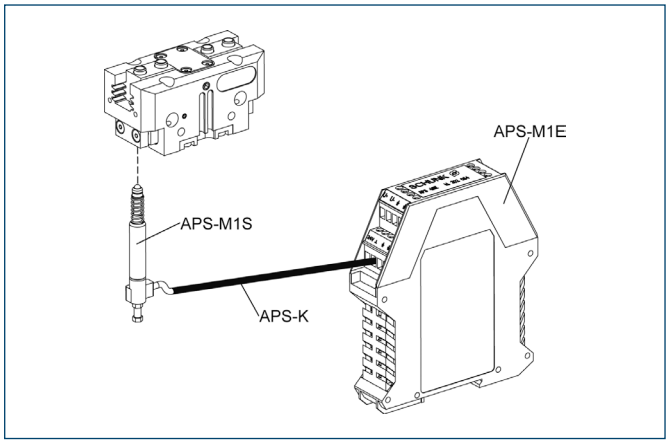


Analog multi position monitoring for any desired positions

| Description | ID |
|---|---|
| Mounting kit | |
| AS-APS-M1-125/1 | **0302081** |
| AS-APS-M1-125/2 | **0302082** |
| Connection cables | |
| APS-K0200 | **0302066** |
| APS-K0700 | **0302068** |
| Electronic Processor | |
| APS-M1E | **0302064** |
| Sensor | |
| APS-M1S | **0302062** |

ⓘ When using an APS system, for each gripper a mounting kit (AS-APS), an APS sensor (APS-M 1S, incl. 3 m cable) as well as an electronics (APS-M1e) are required.
ⓘ An extension cable (APS-K) can be connected between the sensor and the electronics as an option. The max. cable length between the sensor and the electronics is 10 m, between the electronics and their control unit (PLC) it is max. 1 m.

You can find more detailed information and individual parts of the above-mentioned accessories in the “Accessories” catalog section.

## Flexible Position Sensor

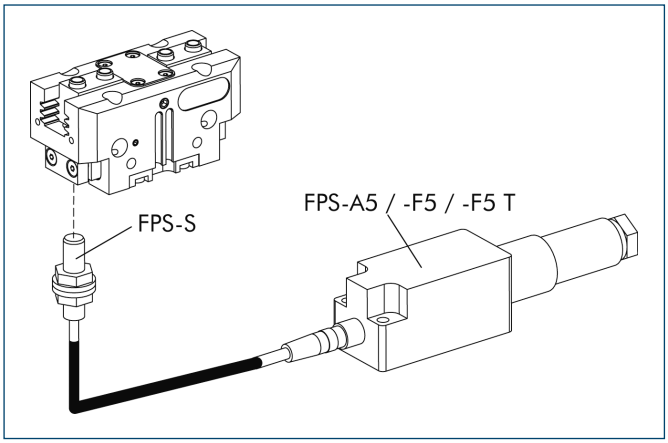


Flexible position monitoring of up to five positions

| Description | ID |
|---|---|
| Mounting kit for FPS | |
| AS-PGN/PZN-plus 125/1, PZB 160 | **0301636** |
| AS-PGN/PZN-plus 125/2 | **0301637** |
| Electronic Processor | |
| FPS-F5 | **0301805** |
| FPS-F5 T | **0301807** |
| Sensor | |
| FPS-S M8 | **0301704** |

ⓘ When using a FPS system, a FPS sensor (FPS-S) and a control unit (FPS-F5 / F5 T or A5) are required for each gripper as well as a mounting kit (AS), if listed. Cable extensions (KV) are available as options in the “Accessories” catalog section.

You can find more detailed information and individual parts of the above-mentioned accessories in the “Accessories” catalog section.

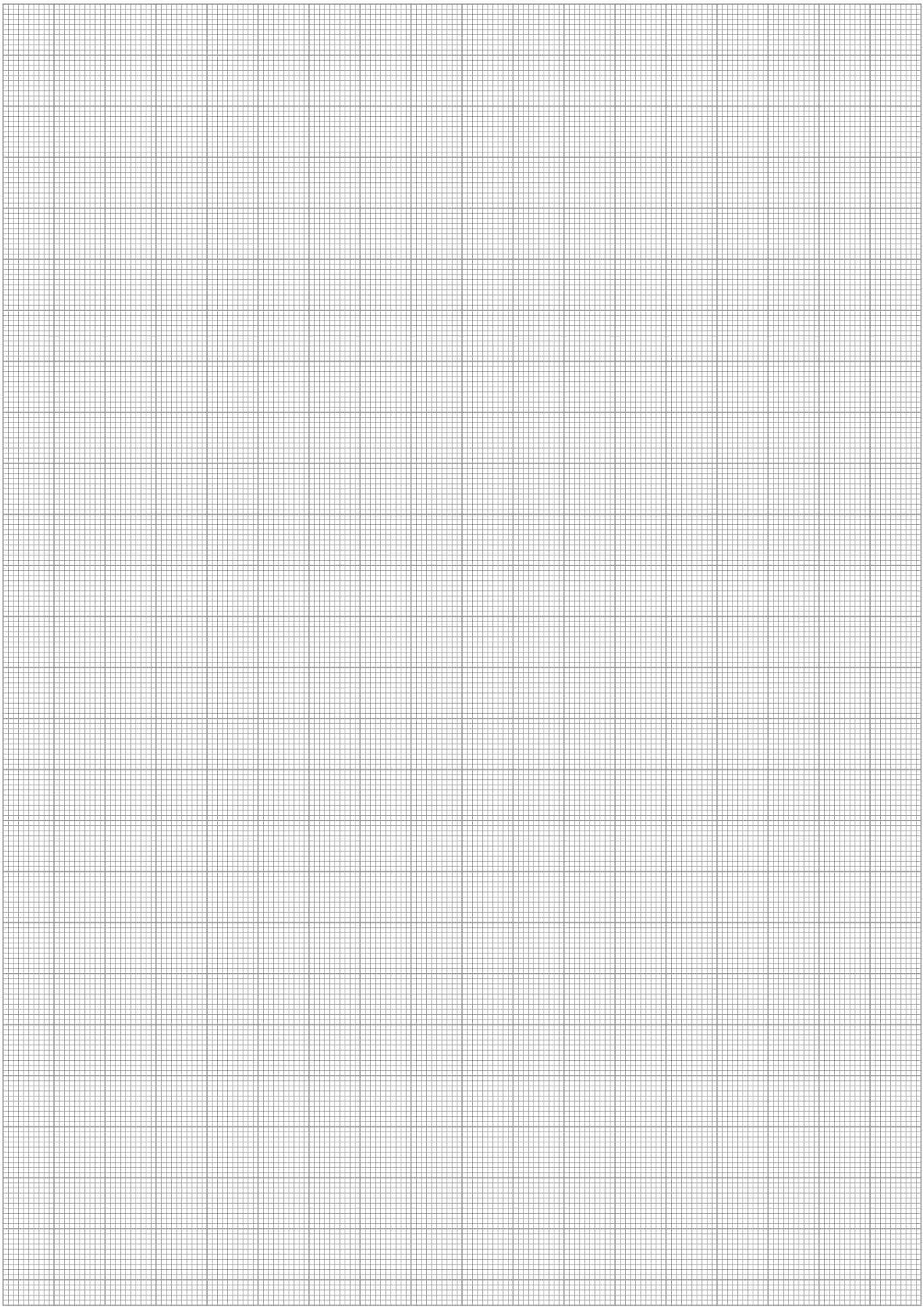

# PGN-plus 160

**Pneumatic • 2-Finger Parallel Gripper • Universal Gripper**



## Gripping force, I.D. gripping

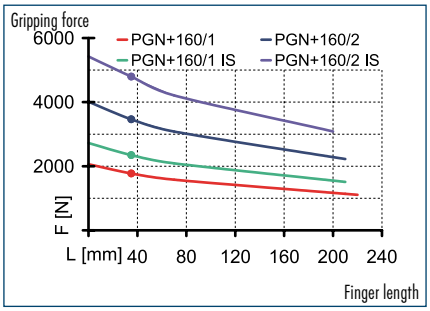


## Gripping force, O.D. gripping

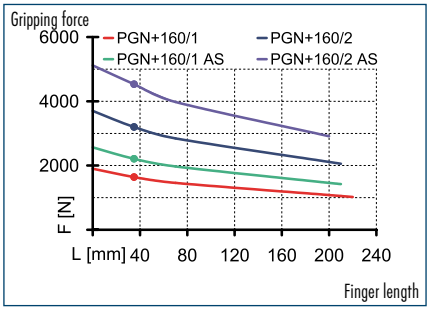


## Finger load

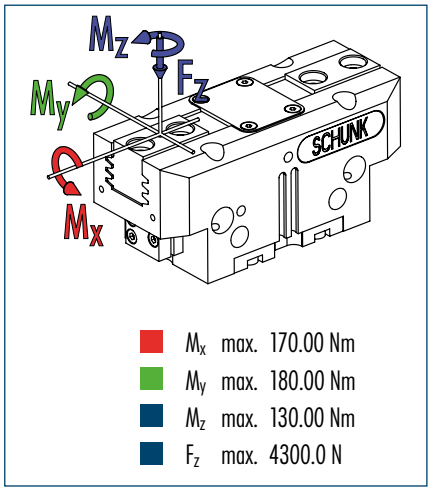


- $M_x$ max. 170.00 Nm
- $M_y$ max. 180.00 Nm
- $M_z$ max. 130.00 Nm
- $F_z$ max. 4300.0 N

ⓘ The indicated moments and forces are static values, apply per base jaw and may occur simultaneously. $M_y$ may arise in addition to the moment generated by the gripping force itself. If the max. permitted finger weight is exceeded, it is imperative to throttle the air pressure so that the jaw movement occurs without any hitting or bouncing. Service life may be reduced.

## Technical data

| Description | | PGN-plus 160-1 | PGN-plus 160-2 | PGN-plus 160-1-AS | PGN-plus 160-2-AS | PGN-plus 160-1-IS | PGN-plus 160-2-IS |
|---|---|---|---|---|---|---|---|
| **ID** | | **0371104** | **0371154** | **0371404** | **0371454** | **0371464** | **0371474** |
| Stroke per finger | [mm] | 16 | 8 | 16 | 8 | 16 | 8 |
| Closing force | [N] | 1640 | 3200 | 2210 | 4420 | | |
| Opening force | [N] | 1770 | 3460 | | | 2340 | |
| Min. spring force | [N] | | | 570 | 1220 | 570 | 1220 |
| Weight | [kg] | 2.6 | 2.6 | 3.3 | 3.3 | 3.3 | 3.3 |
| Recommended workpiece weight | [kg] | 8.2 | 16 | 8.2 | 16 | 8.2 | 16 |
| Air consumption per double stroke | [cm³] | 157 | 157 | 265 | 265 | 265 | 265 |
| Min./max. operating pressure | [bar] | 2.5/8 | 2.5/8 | 4/6.5 | 4/6.5 | 4/6.5 | 4/6.5 |
| Nominal operating pressure | [bar] | 6 | 6 | 6 | 6 | 6 | 6 |
| Closing/opening time | [s] | 0.15/0.15 | 0.15/0.15 | 0.12/0.25 | 0.12/0.25 | 0.25/0.12 | 0.25/0.12 |
| Max. permitted finger length | [mm] | 220 | 210 | 210 | 200 | 210 | 200 |
| Max. permitted weight per finger | [kg] | 3.5 | 3.5 | 3.5 | 3.5 | 3.5 | 3.5 |
| IP class | | 40 | 40 | 40 | 40 | 40 | 40 |
| Min./max. ambient temperature | [°C] | -10/90 | -10/90 | -10/90 | -10/90 | -10/90 | -10/90 |
| Repeat accuracy | [mm] | 0.01 | 0.01 | 0.01 | 0.01 | 0.01 | 0.01 |
| Cleanroom class ISO-classification 14644-1 | | 5 | 5 | 5 | 5 | 5 | 5 |
| **OPTIONS and their characteristics** | | | | | | | |
| Dust-protection version | | **37371104** | **37371154** | **37371404** | **37371454** | **37371464** | **37371474** |
| IP class | | 64 | 64 | 64 | 64 | 64 | 64 |
| Weight | [kg] | 3 | 3 | 3.7 | 3.7 | 3.7 | 3.7 |
| Anti-corrosion version | | **38371104** | **38371154** | **38371404** | **38371454** | **38371464** | **38371474** |
| High-temperature version | | **39371104** | **39371154** | **39371404** | **39371454** | **39371464** | **39371474** |
| Min./max. ambient temperature | [°C] | -10/130 | -10/130 | -10/130 | -10/130 | -10/130 | -10/130 |
| Force intensified version | | PGN-plus 160-1-KVZ | PGN-plus 160-2-KVZ | PGN-plus 160-1-AS-KVZ | | PGN-plus 160-1-IS-KVZ | |
| ID | | **0372104** | **0372154** | **0372404** | | **0372464** | |
| Closing force | [N] | 2950 | 5760 | 3520 | | | |
| Opening force | [N] | 3185 | 6230 | | | 3755 | |
| Weight | [kg] | 3.4 | 3.4 | 4.4 | | 4.4 | |
| Maximum pressure | [bar] | 6 | 6 | 6 | | 6 | |
| Max. permitted finger length | [mm] | 160 | 125 | 125 | | 125 | |
| Precision version | | **0371126** | **0371176** | **0371426** | **0371441** | | |

## Main view

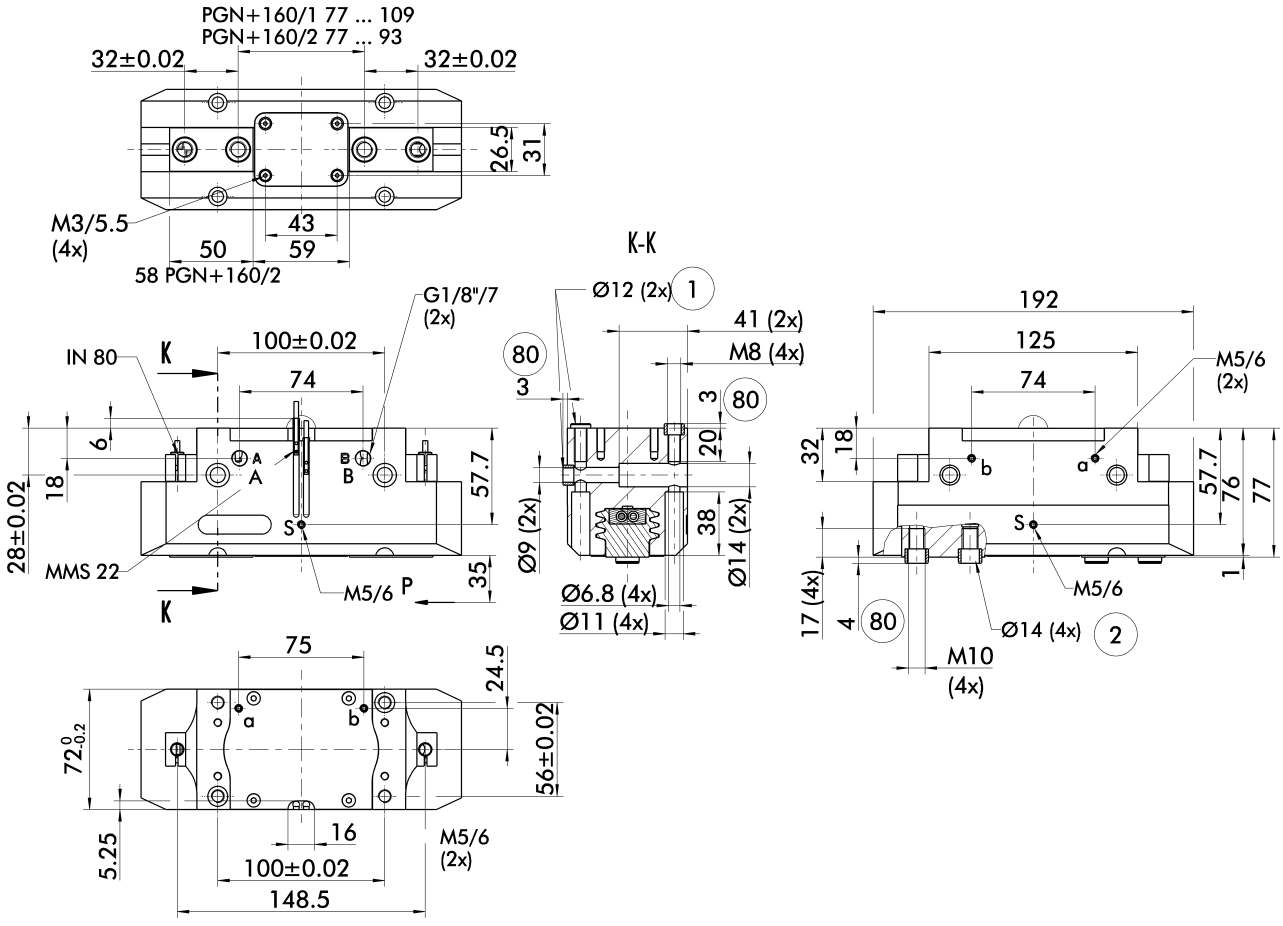


The drawing shows the gripper in the basic version with closed jaws, the dimensions do not include the options described below.

ⓘ The SDV-P pressure maintenance valve can also be used for I.D. or O.D. gripping alternatively or in addition to the spring-loaded, mechanical gripping force maintenance device (see "Accessories" catalog section).

A, a Main/direct connection, gripper opening
B, b Main/direct connection, gripper closing
S Air purge connection
① Gripper connection
② Finger connection
80 Depth of the centering sleeve hole in the matching part

## Hose-free direct connection

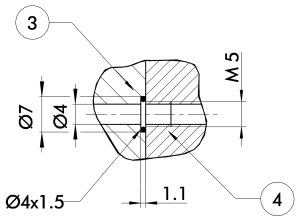


③ Adapter
④ Gripper

The direct connection is used for supplying compressed air without hoses. Instead, the pressure medium is fed through bore-holes in the mounting plate.

## AS/IS gripping force maintenance device

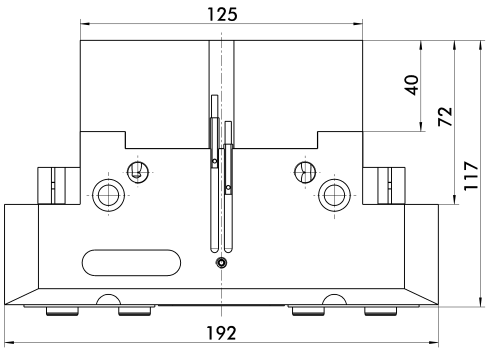


The mechanical gripping force maintenance device ensures a minimum gripping force even in case of pressure drop. This acts as closing force in the AS version, and as opening force in the IS version. In addition, the gripping force maintenance device can also be used for increasing the gripping force or for single-acting gripping.

## Dust-protection version

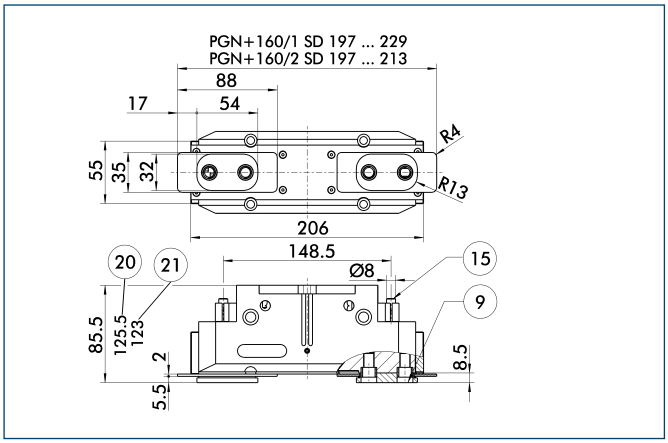


(9) For mounting screw connection diagram, see basic version
(15) Sealing bolt
(20) For AS / IS version
(21) Applies for KVZ version

The "dust-protection" option increases the degree of protection against penetrating substances. The screw connection diagram shifts by the height of the intermediate jaw. The finger length is still measured from the upper edge of the gripper housing.

## Precision version

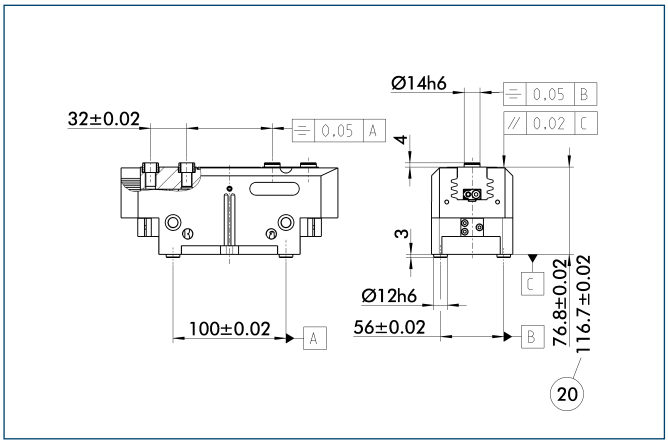


(20) For AS / IS version

The indicated tolerances just refer to the types of precision versions shown in the chart of technical specifications. All other types of precision versions are available on request.

## Force intensified version

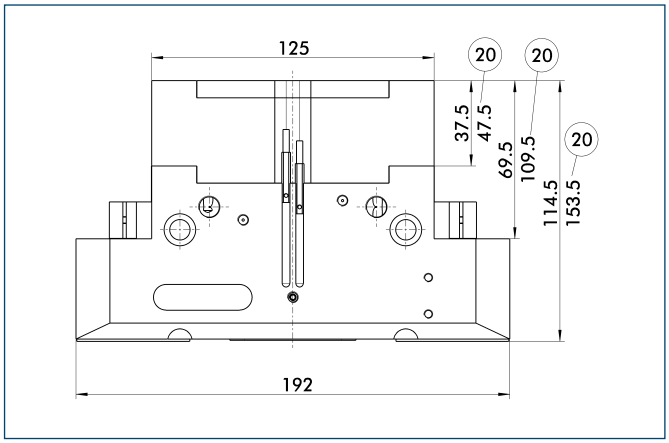


(20) For AS / IS version

The KVZ cylinder increases the gripping forces during opening and closing. A second, in series-connected piston also increases the force on the wedge hook. The full gripping force shown in the data table is sometimes only reached after a few hundred gripping cycles. Please consider that grippers which are equipped with a gripping force maintenance device (AS / IS) are higher.

## Maximum permitted finger projection

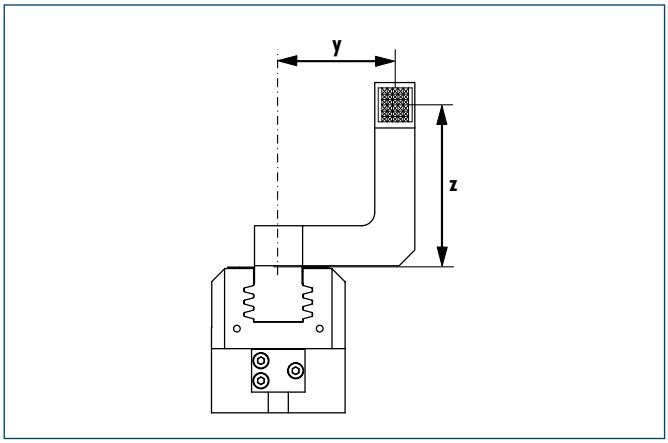


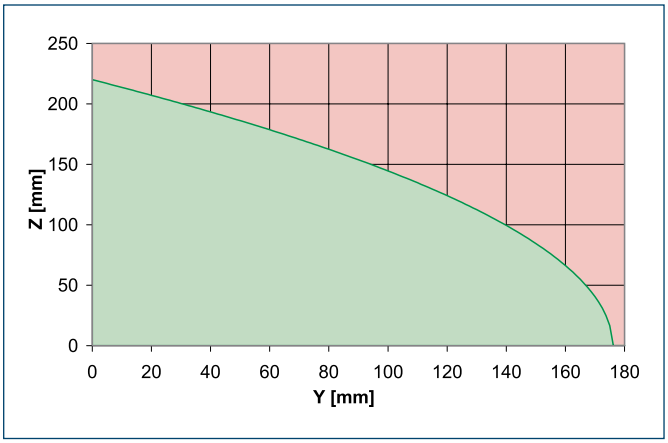


Permitted range
Inadmissible range

The curve applies to the basic version (stroke -1). For other versions, the curve will be parallel but offset in line with the max. permitted finger length.

## Protection cover

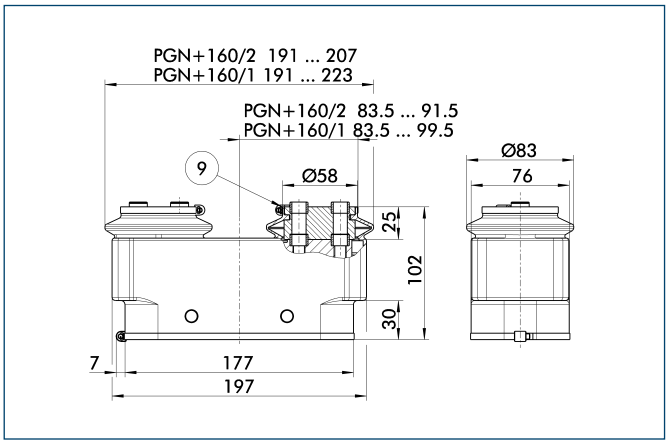


⑨ For mounting screw connection diagram, see basic version

The HUE protective cover completely protects the gripper against external influences up to IP65 if an additional sealing of the cover bottom is provided as part of the application. The mounting diagram shifts by the height of the intermediate jaw.

| Description | ID | Cleanroom class ISO-classification 14644-1 |
|---|---|---|
| Protection cover | | |
| HUE PGN-plus 160 | **0371484** | 2 |

## Quick-change Jaw System

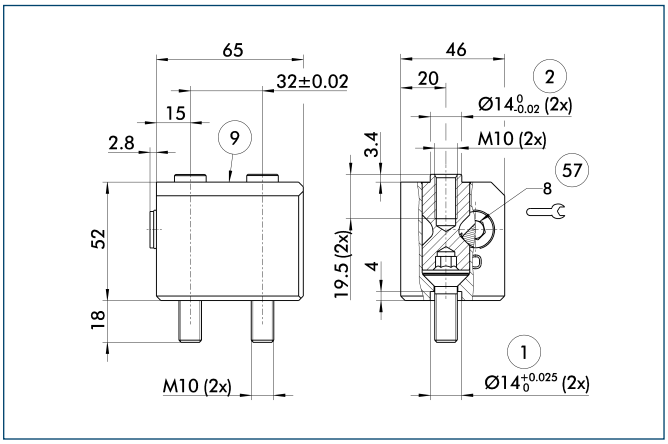


① Gripper connection
② Finger connection
⑨ For mounting screw connection diagram, see basic version
57 Locking

The BSWS quick-change jaw system enables top jaws to be changed on the gripper manually and rapidly. An adapter (BSWS-A) and a base (BSWS-B) are required for each gripper jaw.
For a reverse assembly without height set-up, one adapter (BSWS-A) and a kit (BSWS-U) per gripper jaw are required. Another effect of the BSWS-U is, that there are no disturbing fastening bores in the finger contour.

| Description | ID |
|---|---|
| Quick-change Jaw System adapter | |
| BSWS-A 160 | **0303030** |
| Quick-change Jaw System base | |
| BSWS-B 160 | **0303031** |
| Quick-change Jaw System reversed | |
| BSWS-U 160 | **0303045** |

You can find more detailed information and individual parts of the above-mentioned accessories in the “Accessories” catalog section.

## Universal intermediate jaw

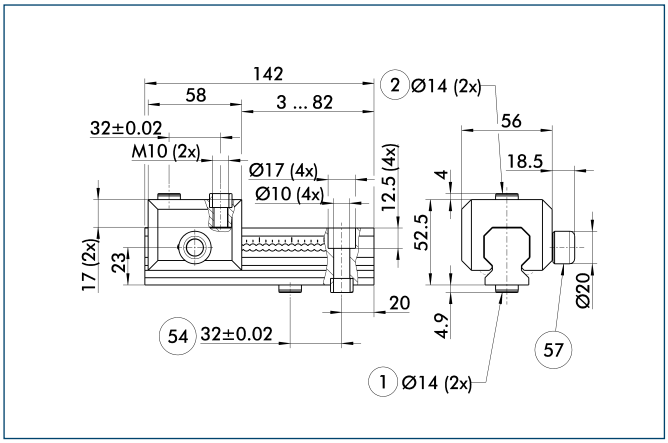


① Gripper connection
② Finger connection
⑤④ Optional right or left connection
⑤⑦ Locking

The universal intermediate jaw allows fast tool-free and reliable plugging and shifting of top jaws at the gripper.

| Description | ID | Grid dimension |
|---|---|---|
| Universal intermediate jaw | | |
| UZB 160 | **0300046** | 4 mm |
| UZB-S 160 | **5518274** | 4 mm |

ⓘ The slide UZB-S can be removed completely and has to be ordered separately. Moreover, it allows a fast jaw change.

## Force measuring jaws

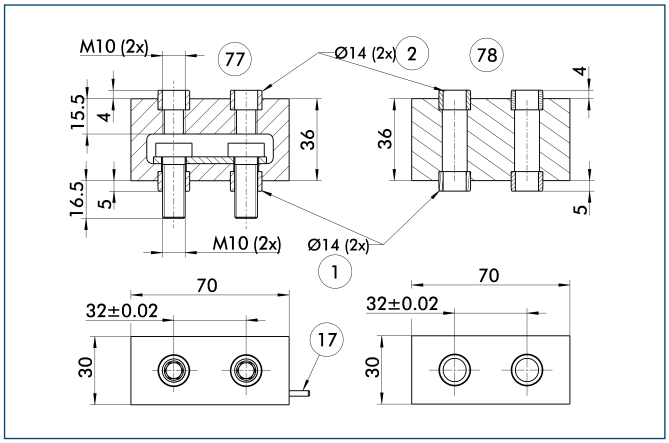


① Gripper connection
② Finger connection
⑰ Cable outlet
⑦⑦ Active intermediate jaws
⑦⑧ Passive intermediate jaws

Force measuring jaws measure gripping forces, but can also determine workpiece weights or dimensional deviations. There are active and passive intermediate jaws (FMS-ZBA or FMS-ZBP). At least one active force measuring jaw is required per gripper, the rest can be passive. For each active jaw, a FMS-A1 control unit and a FMS-A connection cable are required.

| Description | ID |
|---|---|
| Active intermediate jaws | |
| FMS-ZBA 160 | **0301840** |
| Passive intermediate jaws | |
| FMS-ZBP 160 | **0301841** |
| Electronic Processor | |
| FMS-A2 | **0301811** |
| Connection cables | |
| FMS-AK0200 | **0301820** |
| FMS-AK0500 | **0301821** |
| FMS-AK1000 | **0301822** |
| FMS-AK2000 | **0301823** |

## Finger blanks

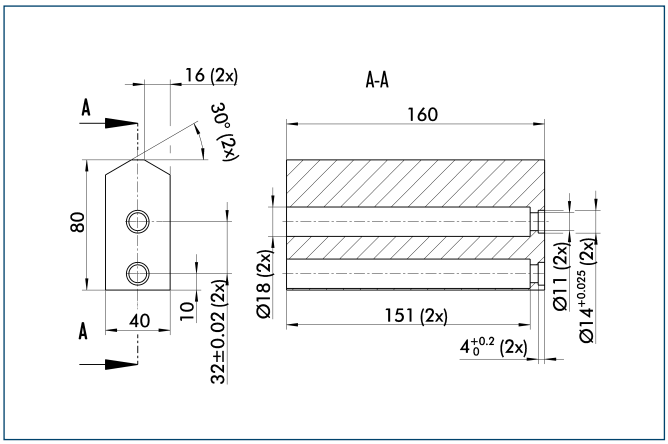


Finger blanks for customized subsequent machining

| Description | ID | Material | Scope of delivery |
|---|---|---|---|
| Finger blanks | | | |
| ABR-plus 160 | **0300014** | Aluminum | 1 |
| SBR-plus 160 | **0300024** | 16 MnCr 5 | 1 |

You can find more detailed information and individual parts of the above-mentioned accessories in the “Accessories” catalog section.

## Tolerance compensation unit

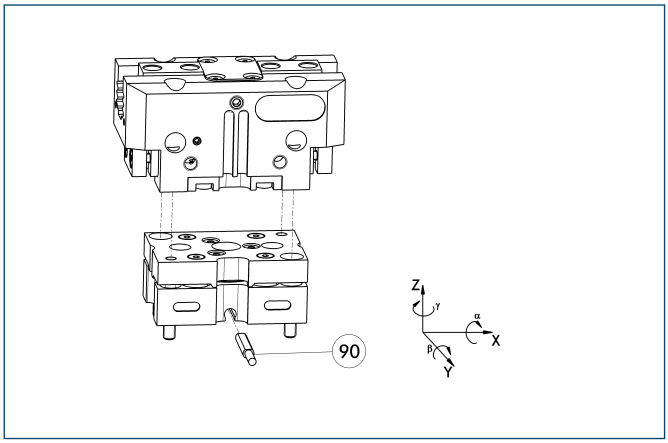


90 Monitoring of locking

Grippers can be directly mounted without an adapter plate. Tolerance compensation unit and gripper have an identical screw connection diagram. Therefore the tolerance compensation units can be assembled later. Please consider the additional assembly height of the tolerance compensation unit. For details see catalog “Robot Accessories”.

| Description | ID | Locking | Deflection |
|---|---|---|---|
| Compensation unit | | | |
| TCU-160-3-MV-P | **0324846** | Yes | ±2°/±1°/±1.5° |
| TCU-160-3-OV-P | **0324847** | No | ±2°/±1°/±1.5° |

## Attachment valves

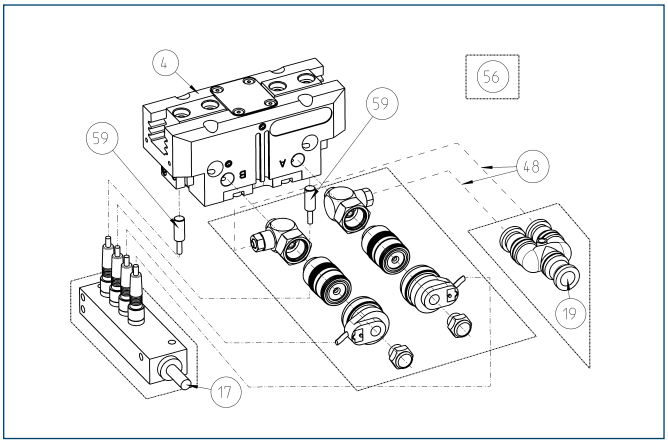


4 Gripper
17 Cable outlet
19 Air connection
48 Hose
56 Included in delivery
59 Monitoring “gripping”

For each gripper one attachment valve ABV is required, optional with distributor for sensors and valves. Attachment valves increase the efficiency, reduce the installation work and air consumption and simplify air supply. For details please refer to the “Accessories” catalog section.

| Description | ID |
|---|---|
| Attachment valves | |
| ABV-MV30-G1/8 | **0303328** |
| ABV-MV30-G1/8-V2-M8 | **0303396** |
| ABV-MV30-G1/8-V4-M8 | **0303366** |
| ABV-MV30-G1/8-V8-M8 | **0303367** |

You can find more detailed information and individual parts of the above-mentioned accessories in the “Accessories” catalog section.

## Programmable magnetic switch

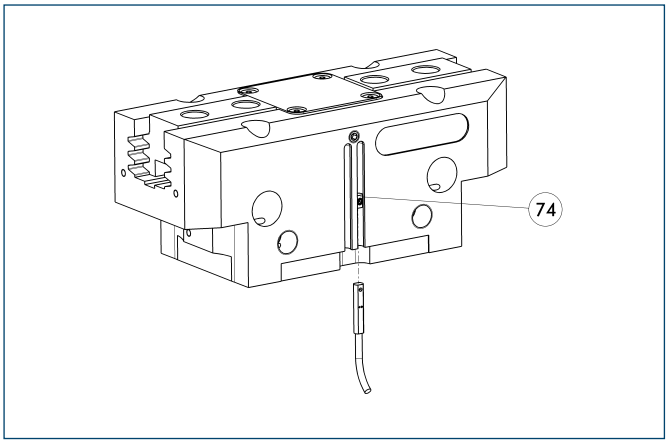


74 Stop for MMS-P

Position monitoring with two programmable positions per sensor. The end position monitoring is mounted in the C-slot.

| Description | ID | Recommended product |
|---|---|---|
| Programmable magnetic switch | | |
| MMS-P 22-S-M8-PNP | **0301370** | • |
| MMSK-P 22-S-PNP | **0301371** | |
| Connection cables | | |
| KA BG08-L 4P-0500 | **0307767** | |
| KA BG08-L 4P-1000 | **0307768** | |
| KA BW08-L 4P-0500 | **0307765** | |
| KA BW08-L 4P-1000 | **0307766** | |
| Sensor Distributor | | |
| V2-M8-4P-2XM8-3P | **0301380** | |

ⓘ Please note the minimum permitted bending radii for the sensor cables, which are generally 35 mm.

ⓘ Per gripper one sensor (closer/NO) is required, optionally a cable extension.

## Electronic magnetic switches

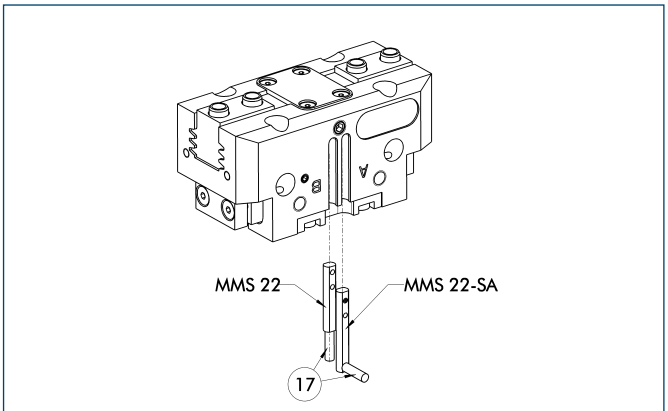


17 Cable outlet

End position monitoring for mounting in the C-slot

| Description | ID | Recommended product |
|---|---|---|
| Electronic magnetic switches | | |
| MMS 22-S-M5-PNP | **0301438** | |
| MMS 22-S-M5-NPN | **0301439** | |
| MMS 22-S-M8-PNP | **0301432** | • |
| MMS 22-S-M8-NPN | **0301433** | |
| MMSK 22-S-PNP | **0301434** | |
| MMSK 22-S-NPN | **0301435** | |
| Electronic magnetic switches with lateral cable outlet | | |
| MMS 22-S-M5-PNP-SA | **0301448** | |
| MMS 22-S-M5-NPN-SA | **0301449** | |
| MMS 22-S-M8-PNP-SA | **0301442** | • |
| MMS 22-S-M8-NPN-SA | **0301443** | |
| MMSK 22-S-PNP-SA | **0301444** | |
| MMSK 22-S-NPN-SA | **0301445** | |
| Reed Switches | | |
| RMS 22-S-M8 | **0377720** | • |
| Connection cables | | |
| KA BG05-L 3P-0300 | **0301652** | |
| KA BG08-L 3P-0300-PNP | **0301622** | |
| KA BG08-L 3P-0500-PNP | **0301623** | |
| KA BW05-L 3P-0300 | **0301650** | |
| KA BW08-L 3P-0300-NPN | **0301602** | |
| KA BW08-L 3P-0300-PNP | **0301594** | |
| KA BW08-L 3P-0500-NPN | **9641116** | |
| KA BW08-L 3P-0500-PNP | **0301502** | |
| Cable extensions | | |
| KV BW08-SG08 3P-0030-PNP | **0301495** | |
| KV BW08-SG08 3P-0100-PNP | **0301496** | |
| KV BW08-SG08 3P-0200-PNP | **0301497** | |

ⓘ Two sensors (closer/NO) are required for each gripper, plus extension cables as an option.

ⓘ Please note the minimum permitted bending radii for the sensor cables, which are generally 35 mm.


You can find more detailed information and individual parts of the above-mentioned accessories in the “Accessories” catalog section.

## Inductive proximity switches

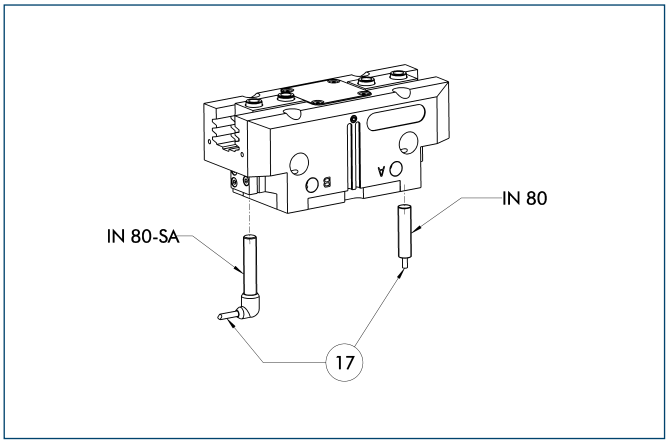


⑰ Cable outlet

End position monitoring for direct mounting

| Description | ID | Recommended product |
|---|---|---|
| Inductive proximity switches | | |
| IN 80-S-M8 | **0301478** | • |
| IN 80-S-M12 | **0301578** | |
| INK 80-S | **0301550** | |
| Inductive proximity switch with lateral outlet | | |
| IN 80-S-M12-SA | **0301587** | |
| IN 80-S-M8-SA | **0301483** | • |
| INK 80-S-SA | **0301566** | |
| Connection cables | | |
| KA BG08-L 3P-0300-PNP | **0301622** | |
| KA BG08-L 3P-0500-PNP | **0301623** | |
| KA BG12-L 3P-0500-PNP | **30016369** | |
| KA BW08-L 3P-0300-PNP | **0301594** | |
| KA BW08-L 3P-0500-PNP | **0301502** | |
| KA BW12-L 3P-0300-PNP | **0301503** | |
| KA BW12-L 3P-0500-PNP | **0301507** | |
| Cable extensions | | |
| KV BG12-SG12 3P-0030-PNP | **0301999** | |
| KV BG12-SG12 3P-0060-PNP | **0301998** | |
| KV BW08-SG08 3P-0030-PNP | **0301495** | |
| KV BW08-SG08 3P-0100-PNP | **0301496** | |
| KV BW08-SG08 3P-0200-PNP | **0301497** | |
| KV BW12-SG12 3P-0030-PNP | **0301595** | |
| KV BW12-SG12 3P-0100-PNP | **0301596** | |
| KV BW12-SG12 3P-0200-PNP | **0301597** | |

ⓘ Two sensors (closer/NO) are required for each gripper, plus extension cables as an option.
ⓘ Please note the minimum permitted bending radii for the sensor cables, which are generally 35 mm.

## Cylindrical Reed Switches

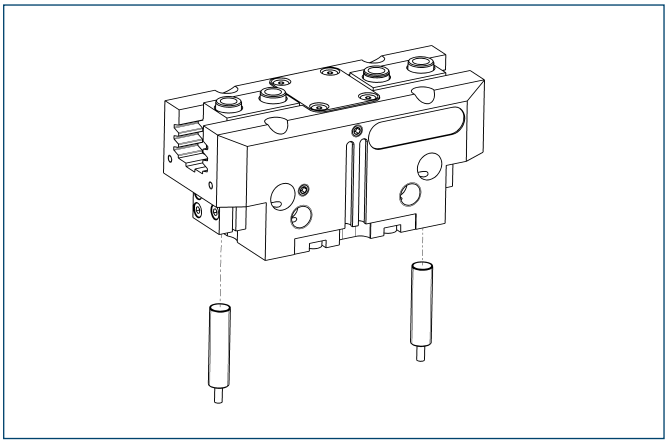

End position monitoring mounted with mounting kit

| Description | ID |
|---|---|
| Mounting kit for proximity switch | |
| AS-RMS 80 PGN/PZN-plus 160-380 | **0377727** |
| Reed Switches | |
| RMS 80-S-M8 | **0377721** |

ⓘ Two sensors (closer/NO) are required for each gripper, plus extension cables as an option.
ⓘ This mounting kit needs to be ordered optionally as an accessory.
ⓘ Please note the minimum permitted bending radii for the sensor cables, which are generally 35 mm.

You can find more detailed information and individual parts of the above-mentioned accessories in the “Accessories” catalog section.

## Analog position sensor

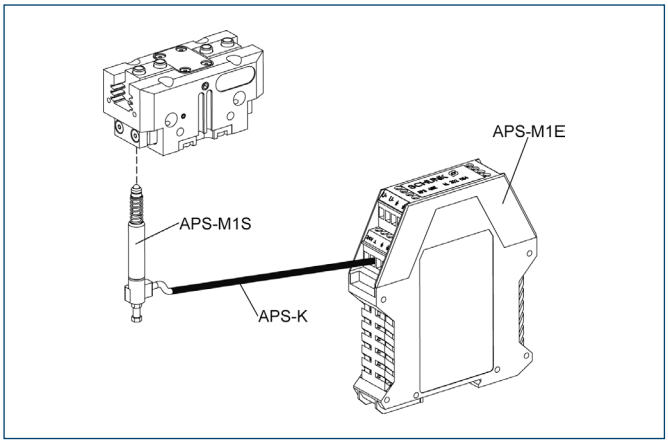


Analog multi position monitoring for any desired positions

| Description | ID |
|---|---|
| Mounting kit | |
| AS-APS-M1-160/1 and 240/2 | **0302083** |
| AS-APS-M1-160/2 | **0302084** |
| Connection cables | |
| APS-K0200 | **0302066** |
| APS-K0700 | **0302068** |
| Electronic Processor | |
| APS-M1E | **0302064** |
| Sensor | |
| APS-M1S | **0302062** |

ⓘ When using an APS system, for each gripper a mounting kit (AS-APS), an APS sensor (APS-M 1S, incl. 3 m cable) as well as an electronics (APS-M1e) are required.

ⓘ An extension cable (APS-K) can be connected between the sensor and the electronics as an option. The max. cable length between the sensor and the electronics is 10 m, between the electronics and their control unit (PLC) it is max. 1 m.

## Flexible Position Sensor

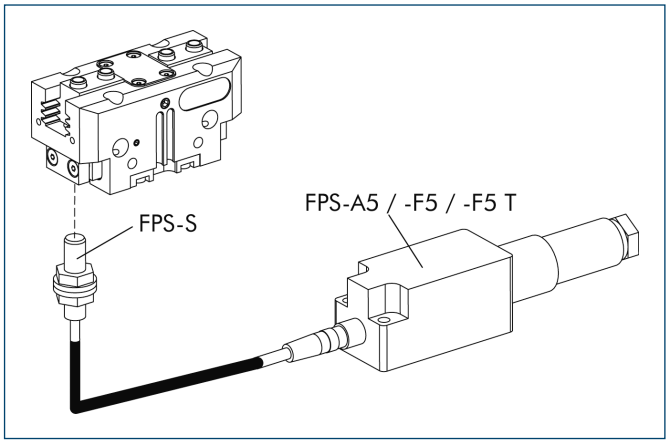


Flexible position monitoring of up to five positions

| Description | ID |
|---|---|
| Mounting kit for FPS | |
| AS-PGN/PZN-plus 160/1 | **0301638** |
| AS-PGN/PZN-plus 160/2 | **0301639** |
| Electronic Processor | |
| FPS-F5 | **0301805** |
| FPS-F5 T | **0301807** |
| Sensor | |
| FPS-S M8 | **0301704** |

ⓘ When using a FPS system, a FPS sensor (FPS-S) and a control unit (FPS-F5 / F5 T or A5) are required for each gripper as well as a mounting kit (AS), if listed. Cable extensions (KV) are available as options in the "Accessories" catalog section.

You can find more detailed information and individual parts of the above-mentioned accessories in the "Accessories" catalog section.

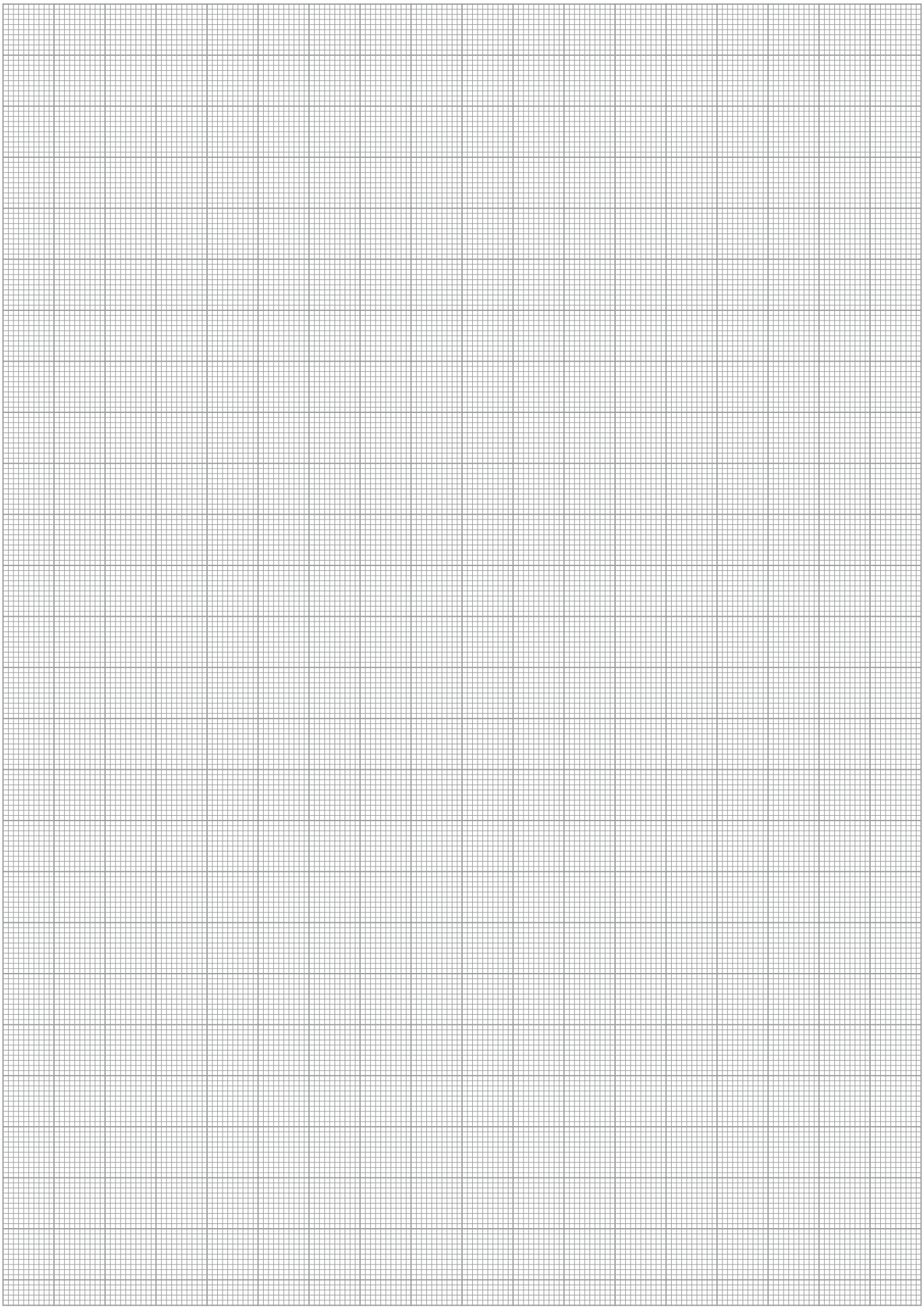

# PGN-plus 200

**Pneumatic • 2-Finger Parallel Gripper • Universal Gripper**

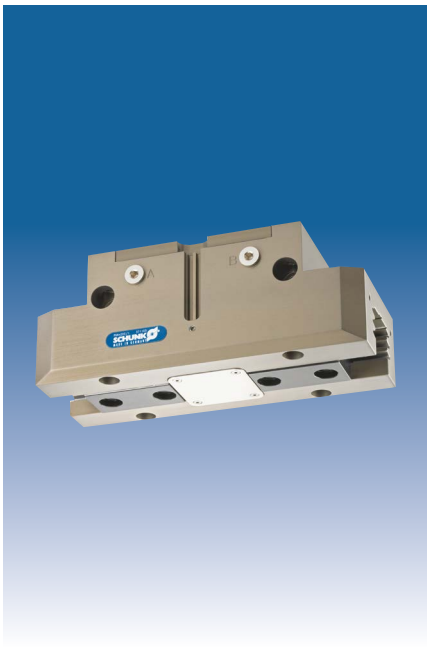

## Gripping force, I.D. gripping

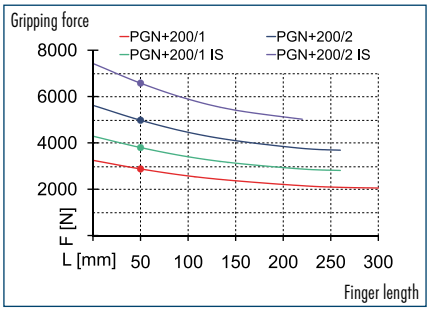


## Gripping force, O.D. gripping

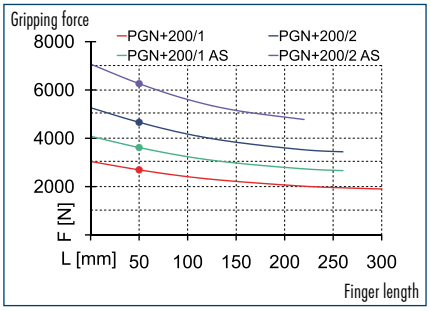


## Finger load

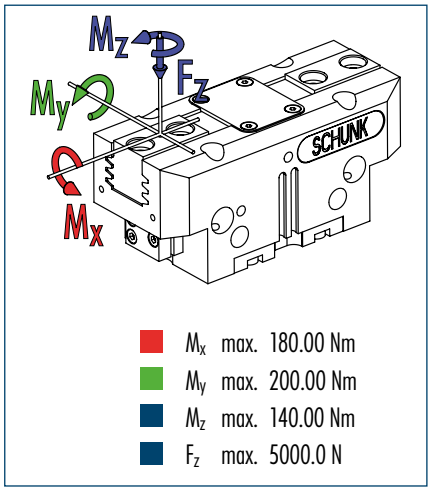


- $M_x$ max. 180.00 Nm
- $M_y$ max. 200.00 Nm
- $M_z$ max. 140.00 Nm
- $F_z$ max. 5000.0 N

ⓘ The indicated moments and forces are static values, apply per base jaw and may occur simultaneously. $M_y$ may arise in addition to the moment generated by the gripping force itself. If the max. permitted finger weight is exceeded, it is imperative to throttle the air pressure so that the jaw movement occurs without any hitting or bouncing. Service life may be reduced.

## Technical data

| Description | | PGN-plus 200-1 | PGN-plus 200-2 | PGN-plus 200-1-AS | PGN-plus 200-2-AS | PGN-plus 200-1-IS | PGN-plus 200-2-IS |
|---|---|---|---|---|---|---|---|
| **ID** | | **0371105** | **0371155** | **0371405** | **0371455** | **0371465** | **0371475** |
| Stroke per finger | [mm] | 25 | 14 | 25 | 14 | 25 | 14 |
| Closing force | [N] | 2700 | 4650 | 3610 | 6250 | | |
| Opening force | [N] | 2870 | 4980 | | | 3780 | 6580 |
| Min. spring force | [N] | | | 910 | 1600 | 910 | 1600 |
| Weight | [kg] | 5.4 | 5.4 | 7.5 | 7.5 | 7.5 | 7.5 |
| Recommended workpiece weight | [kg] | 13.5 | 23.5 | 13.5 | 23.5 | 13.5 | 23.5 |
| Air consumption per double stroke | [cm³] | 390 | 390 | 635 | 635 | 635 | 635 |
| Min./max. operating pressure | [bar] | 2.5/8 | 2.5/8 | 4/6.5 | 4/6.5 | 4/6.5 | 4/6.5 |
| Nominal operating pressure | [bar] | 6 | 6 | 6 | 6 | 6 | 6 |
| Closing/opening time | [s] | 0.35/0.35 | 0.35/0.35 | 0.3/0.6 | 0.3/0.6 | 0.6/0.3 | 0.6/0.3 |
| Max. permitted finger length | [mm] | 280 | 240 | 240 | 200 | 240 | 200 |
| Max. permitted weight per finger | [kg] | 6.5 | 6.5 | 6.5 | 6.5 | 6.5 | 6.5 |
| IP class | | 40 | 40 | 40 | 40 | 40 | 40 |
| Min./max. ambient temperature | [°C] | -10/90 | -10/90 | -10/90 | -10/90 | -10/90 | -10/90 |
| Repeat accuracy | [mm] | 0.02 | 0.02 | 0.02 | 0.02 | 0.02 | 0.02 |
| Cleanroom class ISO-classification 14644-1 | | 5 | 5 | 5 | 5 | 5 | 5 |
| **OPTIONS and their characteristics** | | | | | | | |
| Dust-protection version | | **37371105** | **37371155** | **37371405** | **37371455** | **37371465** | **37371475** |
| IP class | | 64 | 64 | 64 | 64 | 64 | 64 |
| Weight | [kg] | 6 | 6 | 8.1 | 8.1 | 8.1 | 8.1 |
| Anti-corrosion version | | **38371105** | **38371155** | **38371405** | **38371455** | **38371465** | **38371475** |
| High-temperature version | | **39371105** | **39371155** | **39371405** | **39371455** | **39371465** | **39371475** |
| Min./max. ambient temperature | [°C] | -10/130 | -10/130 | -10/130 | -10/130 | -10/130 | -10/130 |
| Force intensified version | | PGN-plus 200-1-KVZ | PGN-plus 200-2-KVZ | PGN-plus 200-1-AS-KVZ | | PGN-plus 200-1-IS-KVZ | |
| ID | | **0372105** | **0372155** | **0372405** | | **0372465** | |
| Closing force | [N] | 4860 | 8370 | 5770 | | | |
| Opening force | [N] | 5165 | 8965 | | | 6075 | |
| Weight | [kg] | 6.7 | 6.7 | 9 | | 9 | |
| Maximum pressure | [bar] | 6 | 6 | 6 | | 6 | |
| Max. permitted finger length | [mm] | 200 | 160 | 160 | | 160 | |
| Precision version | | **0371127** | **0371177** | **0371427** | **0371442** | | |

## Main view

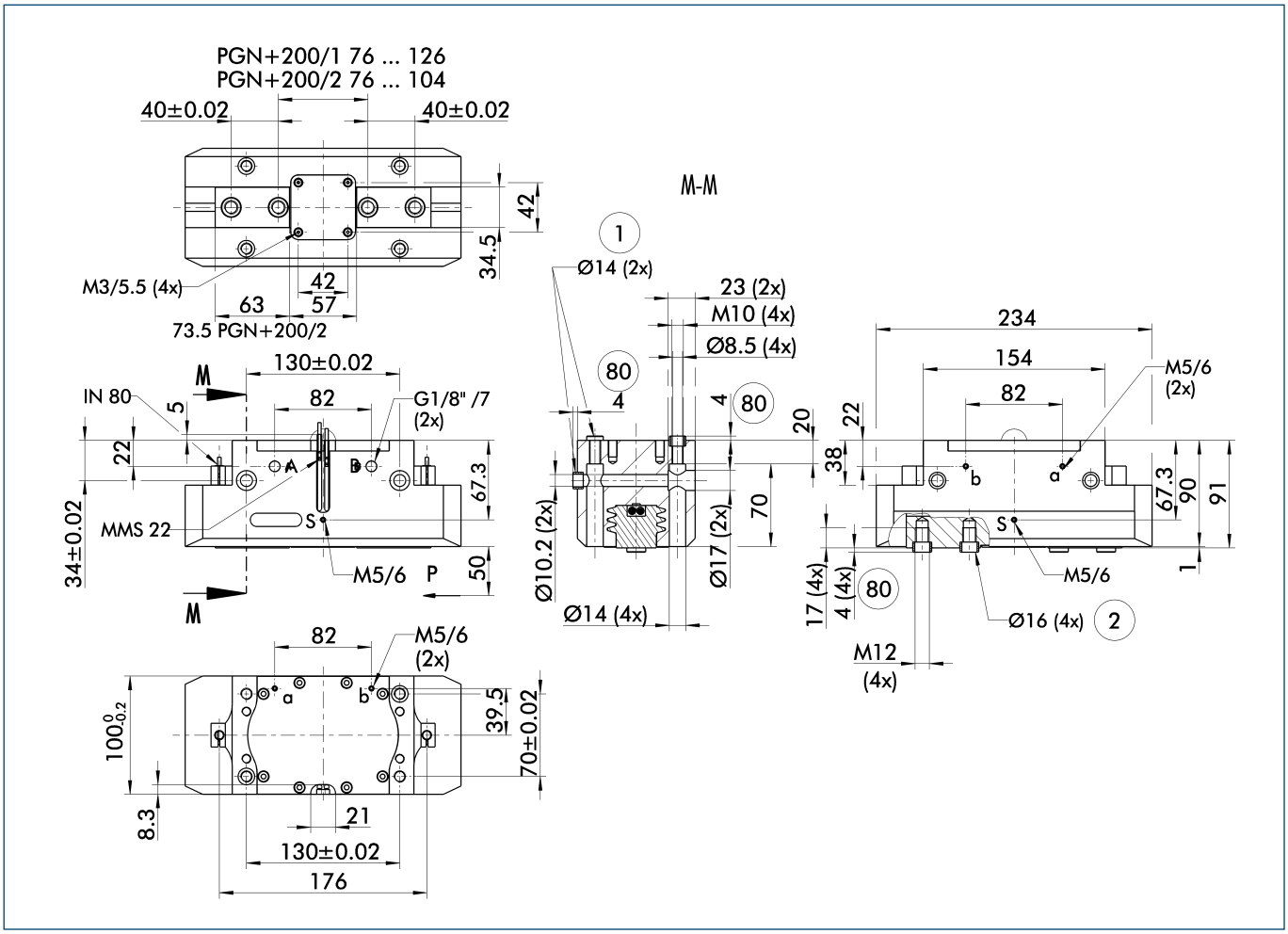


The drawing shows the gripper in the basic version with closed jaws, the dimensions do not include the options described below.

ⓘ The SDV-P pressure maintenance valve can also be used for I.D. or O.D. gripping alternatively or in addition to the spring-loaded, mechanical gripping force maintenance device (see "Accessories" catalog section).

A, a Main/direct connection, gripper opening
B, b Main/direct connection, gripper closing
S Air purge connection
① Gripper connection
② Finger connection
⑧⓪ Depth of the centering sleeve hole in the matching part

## Hose-free direct connection

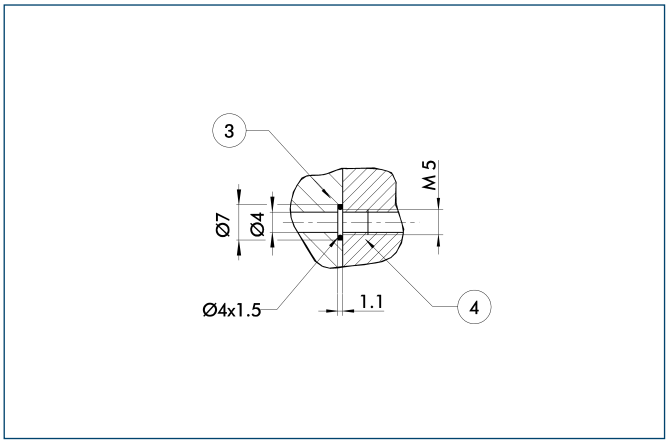


③ Adapter
④ Gripper

The direct connection is used for supplying compressed air without hoses. Instead, the pressure medium is fed through bore-holes in the mounting plate.

## AS/IS gripping force maintenance device

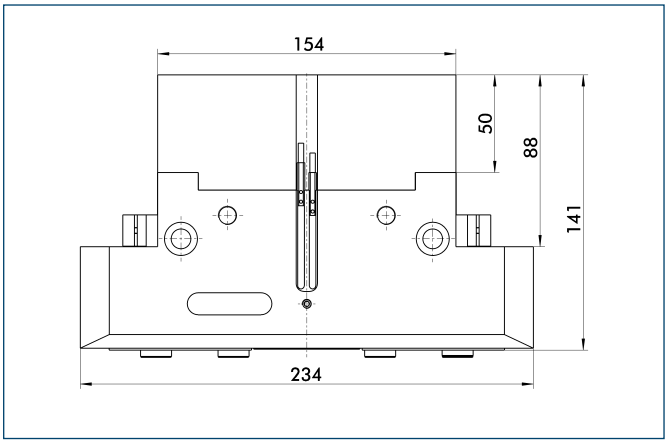


The mechanical gripping force maintenance device ensures a minimum gripping force even in case of pressure drop. This acts as closing force in the AS version, and as opening force in the IS version. In addition, the gripping force maintenance device can also be used for increasing the gripping force or for single-acting gripping.

## Dust-protection version

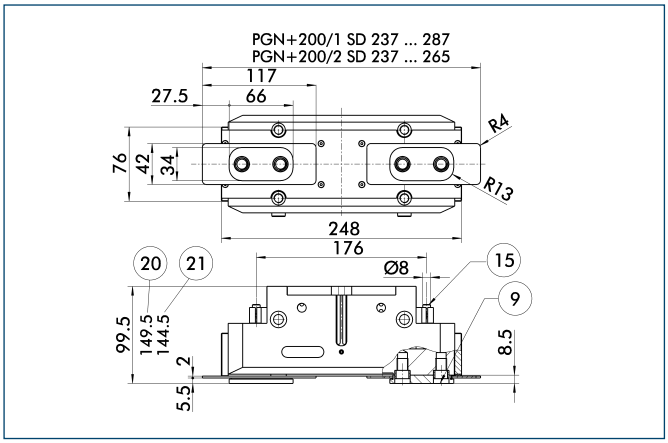


(9) For mounting screw connection diagram, see basic version
(15) Sealing bolt
(20) For AS / IS version
(21) Applies for KVZ version

The "dust-protection" option increases the degree of protection against penetrating substances. The screw connection diagram shifts by the height of the intermediate jaw. The finger length is still measured from the upper edge of the gripper housing.

## Precision version

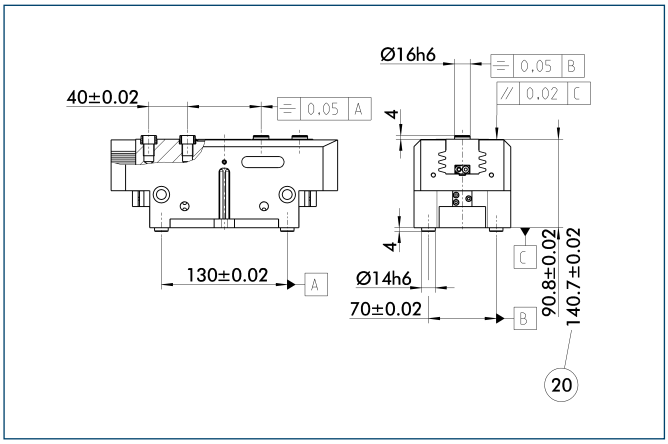


(20) For AS / IS version

The indicated tolerances just refer to the types of precision versions shown in the chart of technical specifications. All other types of precision versions are available on request.

## Force intensified version

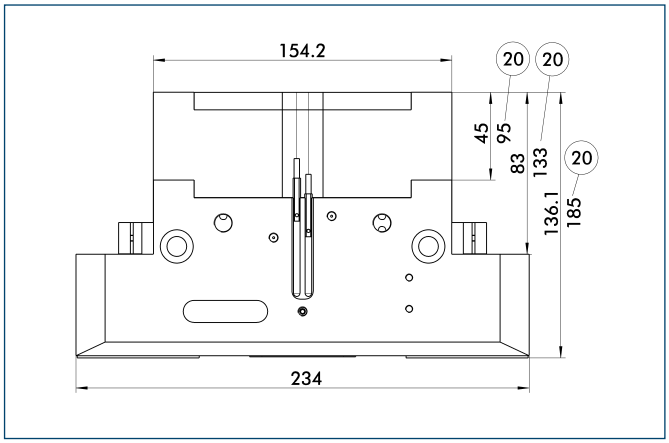


(20) For AS / IS version

The KVZ cylinder increases the gripping forces during opening and closing. A second, in series-connected piston also increases the force on the wedge hook. The full gripping force shown in the data table is sometimes only reached after a few hundred gripping cycles. Please consider that grippers which are equipped with a gripping force maintenance device (AS / IS) are higher.

## Maximum permitted finger projection

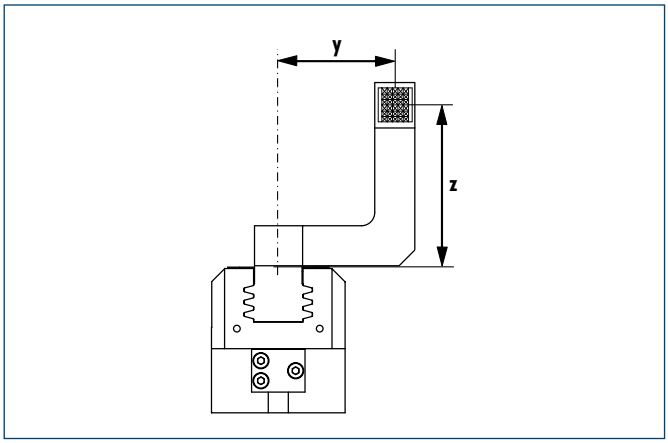


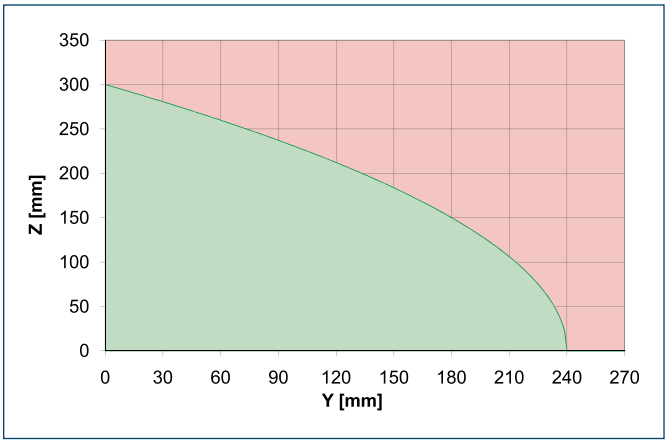


Permitted range
Inadmissible range

The curve applies to the basic version (stroke -1). For other versions, the curve will be parallel but offset in line with the max. permitted finger length.

## Quick-change Jaw System

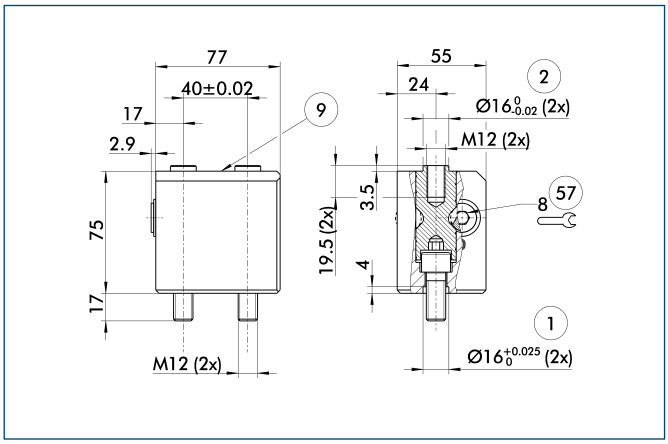


① Gripper connection
② Finger connection
⑨ For mounting screw connection diagram, see basic version
57 Locking

The BSWS quick-change jaw system enables top jaws to be changed on the gripper manually and rapidly. An adapter (BSWS-A) and a base (BSWS-B) are required for each gripper jaw.
For a reverse assembly without height set-up, one adapter (BSWS-A) and a kit (BSWS-U) per gripper jaw are required. Another effect of the BSWS-U is, that there are no disturbing fastening bores in the finger contour.

| Description | ID |
|---|---|
| Quick-change Jaw System adapter | |
| BSWS-A 200 | **0303032** |
| Quick-change Jaw System base | |
| BSWS-B 200 | **0303033** |
| Quick-change Jaw System reversed | |
| BSWS-U 200 | **0303046** |

## Universal intermediate jaw

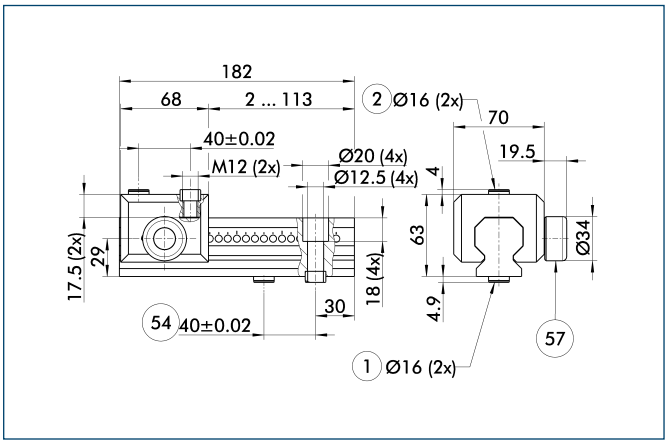


① Gripper connection
② Finger connection
54 Optional right or left connection
57 Locking

The universal intermediate jaw allows fast tool-free and reliable plugging and shifting of top jaws at the gripper.

| Description | ID | Grid dimension |
|---|---|---|
| Universal intermediate jaw | | |
| UZB 200 | **0300047** | 7 mm |
| UZB-S 200 | **5518275** | 7 mm |

ⓘ The slide UZB-S can be removed completely and has to be ordered separately. Moreover, it allows a fast jaw change.

You can find more detailed information and individual parts of the above-mentioned accessories in the “Accessories” catalog section.

## Force measuring jaws

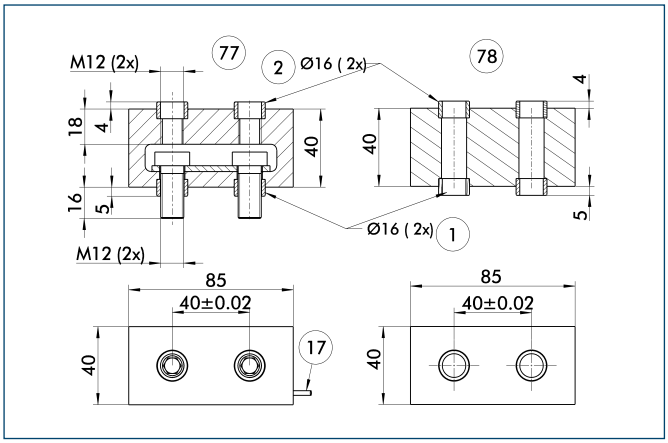


① Gripper connection
② Finger connection
⑰ Cable outlet
⑦⑦ Active intermediate jaws
⑦⑧ Passive intermediate jaws

Force measuring jaws measure gripping forces, but can also determine workpiece weights or dimensional deviations. There are active and passive intermediate jaws (FMS-ZBA or FMS-ZBP). At least one active force measuring jaw is required per gripper, the rest can be passive. For each active jaw, a FMS-A1 control unit and a FMS-A connection cable are required.

| Description | ID |
|---|---|
| Active intermediate jaws | |
| FMS-ZBA 200 | **0301842** |
| Passive intermediate jaws | |
| FMS-ZBP 200 | **0301843** |
| Electronic Processor | |
| FMS-A2 | **0301811** |
| Connection cables | |
| FMS-AK0200 | **0301820** |
| FMS-AK0500 | **0301821** |
| FMS-AK1000 | **0301822** |
| FMS-AK2000 | **0301823** |

## Finger blanks

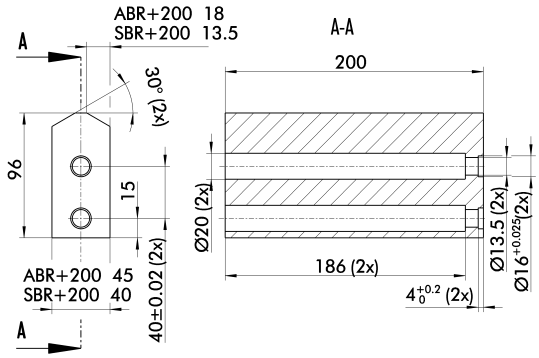


Finger blanks for customized subsequent machining

| Description | ID | Material | Scope of delivery |
|---|---|---|---|
| Finger blanks | | | |
| ABR-plus 200 | **0300015** | Aluminum | 1 |
| SBR-plus 200 | **0300025** | 16 MnCr 5 | 1 |

You can find more detailed information and individual parts of the above-mentioned accessories in the “Accessories” catalog section.

## Tolerance compensation unit

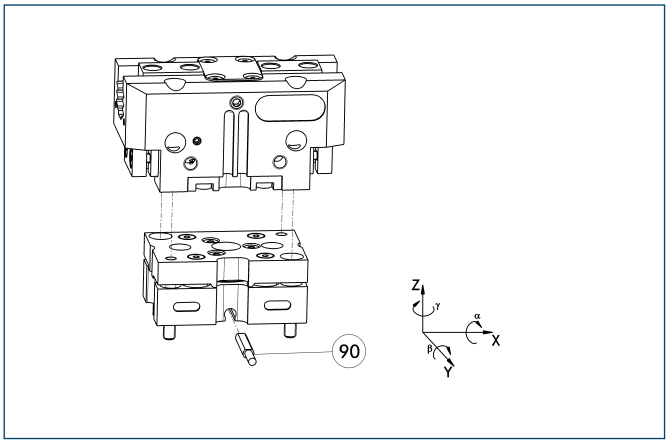


(90) Monitoring of locking

Grippers can be directly mounted without an adapter plate. Tolerance compensation unit and gripper have an identical screw connection diagram. Therefore the tolerance compensation units can be assembled later. Please consider the additional assembly height of the tolerance compensation unit. For details see catalog “Robot Accessories”.

| Description | ID | Locking | Deflection |
|---|---|---|---|
| Compensation unit | | | |
| TCU-200-3-MV-P | **0324864** | Yes | ±2°/±1°/±1.5° |
| TCU-200-3-OV-P | **0324865** | No | ±2°/±1°/±1.5° |

## Programmable magnetic switch

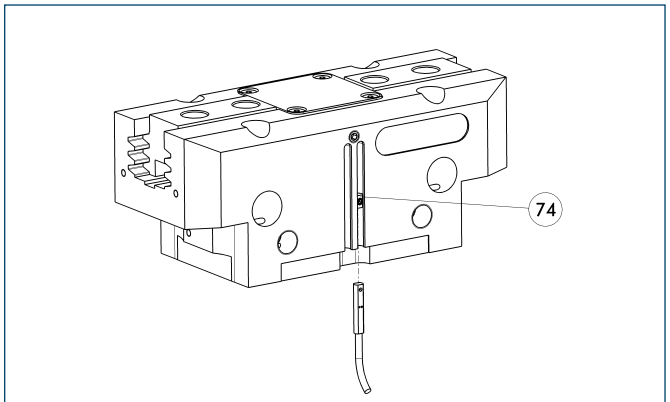


(74) Stop for MMS-P

Position monitoring with two programmable positions per sensor. The end position monitoring is mounted in the C-slot.

| Description | ID | Recommended product |
|---|---|---|
| Programmable magnetic switch | | |
| MMS-P 22-S-M8-PNP | **0301370** | • |
| MMSK-P 22-S-PNP | **0301371** | |
| Connection cables | | |
| KA BG08-L 4P-0500 | **0307767** | |
| KA BG08-L 4P-1000 | **0307768** | |
| KA BW08-L 4P-0500 | **0307765** | |
| KA BW08-L 4P-1000 | **0307766** | |
| Sensor Distributor | | |
| V2-M8-4P-2XM8-3P | **0301380** | |

ⓘ Please note the minimum permitted bending radii for the sensor cables, which are generally 35 mm.
ⓘ Per gripper one sensor (closer/NO) is required, optionally a cable extension.

You can find more detailed information and individual parts of the above-mentioned accessories in the “Accessories” catalog section.

## Electronic magnetic switches

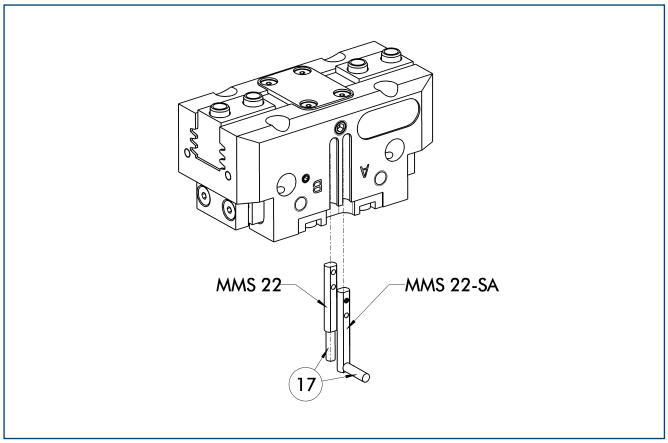


⑰ Cable outlet

End position monitoring for mounting in the C-slot

| Description | ID | Recommended product |
|---|---|---|
| Electronic magnetic switches | | |
| MMS 22-S-M5-PNP | 0301438 | |
| MMS 22-S-M5-NPN | 0301439 | |
| MMS 22-S-M8-PNP | 0301432 | • |
| MMS 22-S-M8-NPN | 0301433 | |
| MMSK 22-S-PNP | 0301434 | |
| MMSK 22-S-NPN | 0301435 | |
| Electronic magnetic switches with lateral cable outlet | | |
| MMS 22-S-M5-PNP-SA | 0301448 | |
| MMS 22-S-M5-NPN-SA | 0301449 | |
| MMS 22-S-M8-PNP-SA | 0301442 | • |
| MMS 22-S-M8-NPN-SA | 0301443 | |
| MMSK 22-S-PNP-SA | 0301444 | |
| MMSK 22-S-NPN-SA | 0301445 | |
| Reed Switches | | |
| RMS 22-S-M8 | 0377720 | • |
| Connection cables | | |
| KA BG05-L 3P-0300 | 0301652 | |
| KA BG08-L 3P-0300-PNP | 0301622 | |
| KA BG08-L 3P-0500-PNP | 0301623 | |
| KA BW05-L 3P-0300 | 0301650 | |
| KA BW08-L 3P-0300-NPN | 0301602 | |
| KA BW08-L 3P-0300-PNP | 0301594 | |
| KA BW08-L 3P-0500-NPN | 9641116 | |
| KA BW08-L 3P-0500-PNP | 0301502 | |
| Cable extensions | | |
| KV BW08-SG08 3P-0030-PNP | 0301495 | |
| KV BW08-SG08 3P-0100-PNP | 0301496 | |
| KV BW08-SG08 3P-0200-PNP | 0301497 | |

ⓘ Two sensors (closer/NO) are required for each gripper, plus extension cables as an option.

ⓘ Please note the minimum permitted bending radii for the sensor cables, which are generally 35 mm.

## Inductive proximity switches

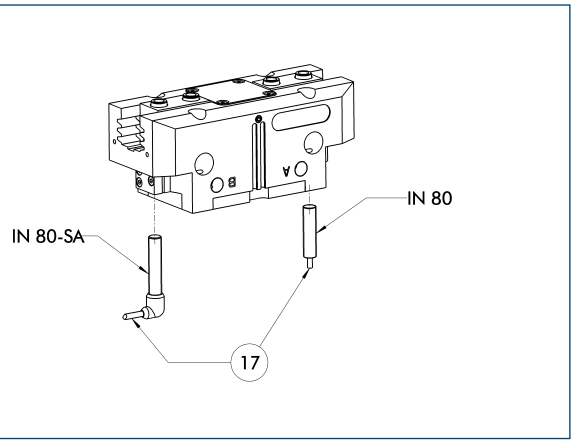


⑰ Cable outlet

End position monitoring for direct mounting

| Description | ID | Recommended product |
|---|---|---|
| Inductive proximity switches | | |
| IN 80-S-M8 | 0301478 | • |
| IN 80-S-M12 | 0301578 | |
| INK 80-S | 0301550 | |
| Inductive proximity switch with lateral outlet | | |
| IN 80-S-M12-SA | 0301587 | |
| IN 80-S-M8-SA | 0301483 | • |
| INK 80-S-SA | 0301566 | |
| Connection cables | | |
| KA BG08-L 3P-0300-PNP | 0301622 | |
| KA BG08-L 3P-0500-PNP | 0301623 | |
| KA BG12-L 3P-0500-PNP | 30016369 | |
| KA BW08-L 3P-0300-PNP | 0301594 | |
| KA BW08-L 3P-0500-PNP | 0301502 | |
| KA BW12-L 3P-0300-PNP | 0301503 | |
| KA BW12-L 3P-0500-PNP | 0301507 | |
| Cable extensions | | |
| KV BG12-SG12 3P-0030-PNP | 0301999 | |
| KV BG12-SG12 3P-0060-PNP | 0301998 | |
| KV BW08-SG08 3P-0030-PNP | 0301495 | |
| KV BW08-SG08 3P-0100-PNP | 0301496 | |
| KV BW08-SG08 3P-0200-PNP | 0301497 | |
| KV BW12-SG12 3P-0030-PNP | 0301595 | |
| KV BW12-SG12 3P-0100-PNP | 0301596 | |
| KV BW12-SG12 3P-0200-PNP | 0301597 | |

ⓘ Two sensors (closer/NO) are required for each gripper, plus extension cables as an option.

ⓘ Please note the minimum permitted bending radii for the sensor cables, which are generally 35 mm.

You can find more detailed information and individual parts of the above-mentioned accessories in the “Accessories” catalog section.

## Cylindrical Reed Switches

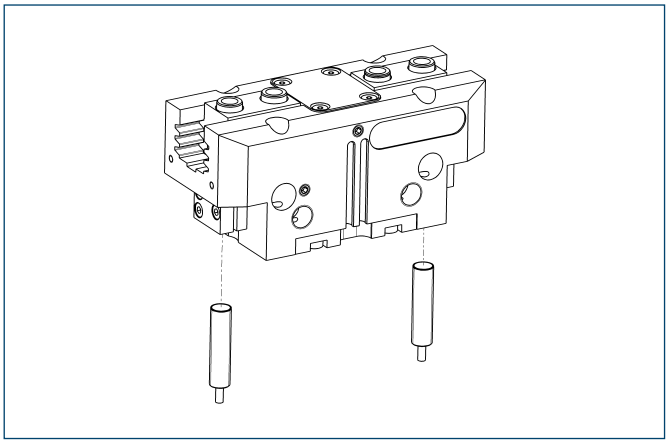

End position monitoring mounted with mounting kit

| Description | ID |
|---|---|
| Mounting kit for proximity switch | |
| AS-RMS 80 PGN/PZN-plus 160-380 | **0377727** |
| Reed Switches | |
| RMS 80-S-M8 | **0377721** |

ⓘ Two sensors (closer/NO) are required for each gripper, plus extension cables as an option.
ⓘ This mounting kit needs to be ordered optionally as an accessory.
ⓘ Please note the minimum permitted bending radii for the sensor cables, which are generally 35 mm.

## Analog position sensor

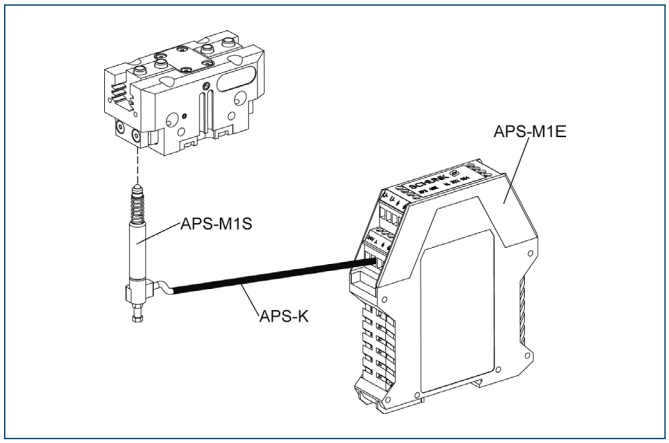


Analog multi position monitoring for any desired positions

| Description | ID |
|---|---|
| Mounting kit | |
| AS-APS-M1-200/1 and 380/2 | **0302085** |
| AS-APS-M1-200/2 | **0302086** |
| Connection cables | |
| APS-K0200 | **0302066** |
| APS-K0700 | **0302068** |
| Electronic Processor | |
| APS-M1E | **0302064** |
| Sensor | |
| APS-M1S | **0302062** |

ⓘ When using an APS system, for each gripper a mounting kit (AS-APS), an APS sensor (APS-M 1S, incl. 3 m cable) as well as an electronics (APS-M1e) are required.
ⓘ An extension cable (APS-K) can be connected between the sensor and the electronics as an option. The max. cable length between the sensor and the electronics is 10 m, between the electronics and their control unit (PLC) it is max. 1 m.

You can find more detailed information and individual parts of the above-mentioned accessories in the “Accessories” catalog section.

## Flexible Position Sensor

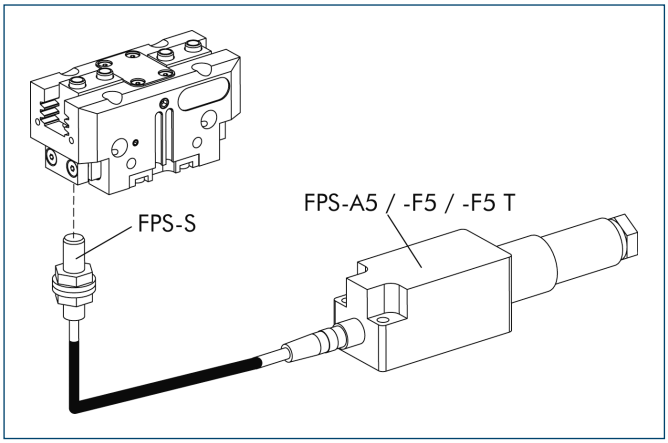


Flexible position monitoring of up to five positions

| Description | ID |
|---|---|
| Mounting kit for FPS | |
| AS-PGN/PZN-plus 200/1 | **0301640** |
| AS-PGN/PZN-plus 200/2 | **0301641** |
| Electronic Processor | |
| FPS-F5 | **0301805** |
| FPS-F5 T | **0301807** |
| Sensor | |
| FPS-S M8 | **0301704** |

ⓘ When using a FPS system, a FPS sensor (FPS-S) and a control unit (FPS-F5 / F5 T or A5) are required for each gripper as well as a mounting kit (AS), if listed. Cable extensions (KV) are available as options in the “Accessories” catalog section.

You can find more detailed information and individual parts of the above-mentioned accessories in the “Accessories” catalog section.

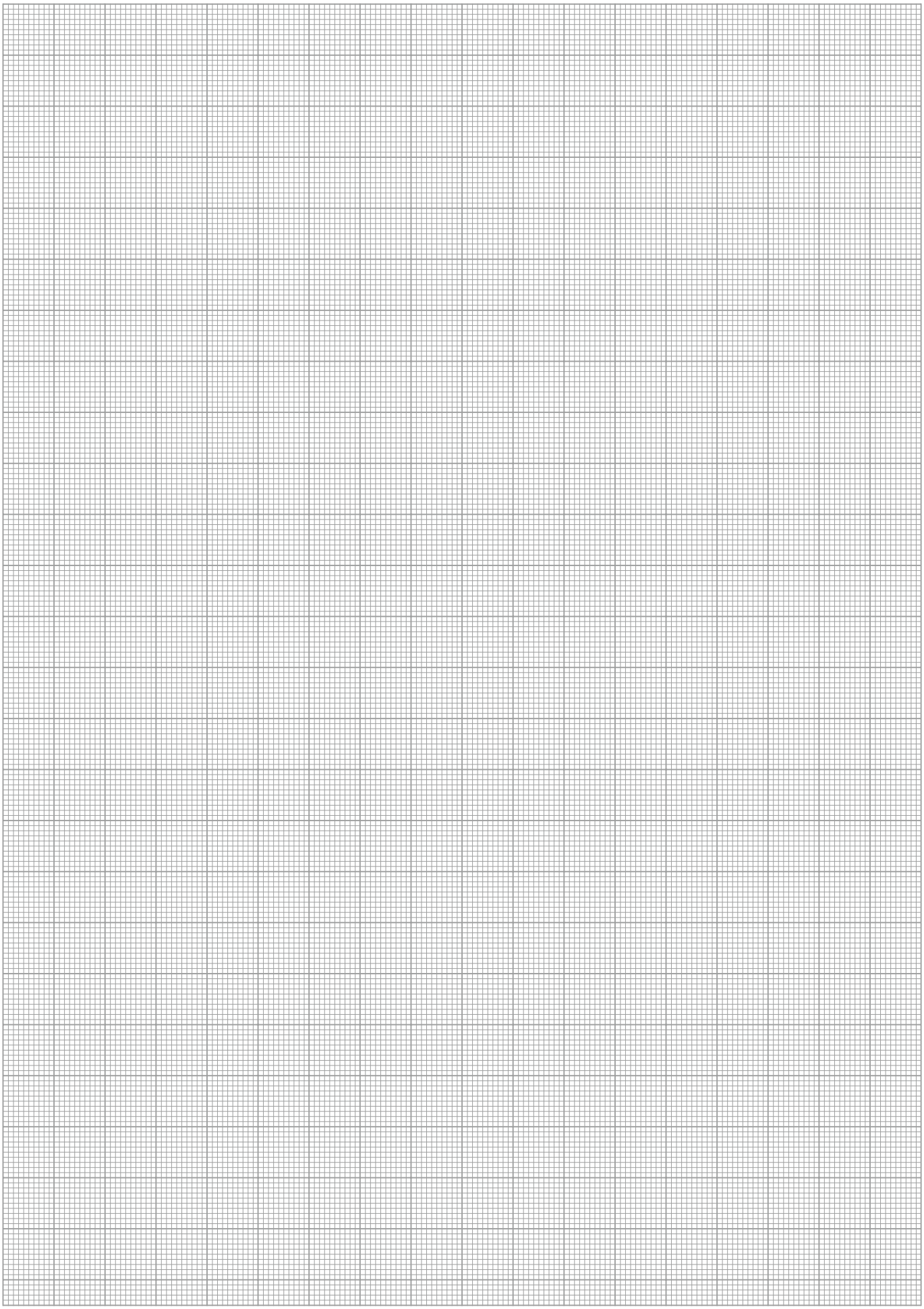

# PGN-plus 240

**Pneumatic • 2-Finger Parallel Gripper • Universal Gripper**



## Gripping force, I.D. gripping

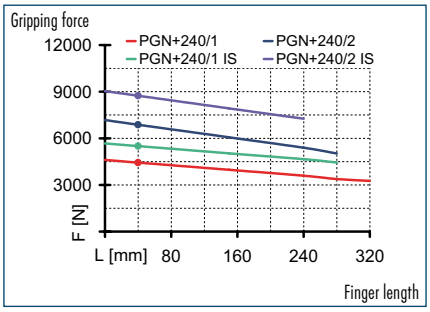


## Gripping force, O.D. gripping

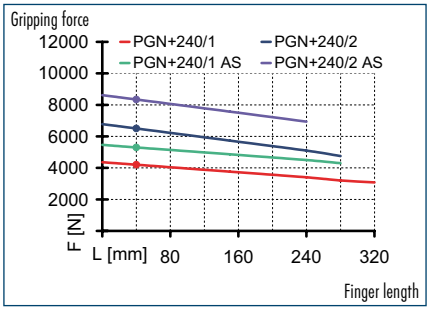


## Finger load

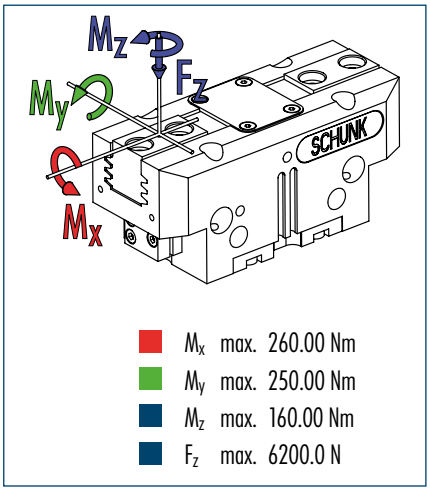


- $M_x$ max. 260.00 Nm
- $M_y$ max. 250.00 Nm
- $M_z$ max. 160.00 Nm
- $F_z$ max. 6200.0 N

ⓘ The indicated moments and forces are static values, apply per base jaw and may occur simultaneously. $M_y$ may arise in addition to the moment generated by the gripping force itself. If the max. permitted finger weight is exceeded, it is imperative to throttle the air pressure so that the jaw movement occurs without any hitting or bouncing. Service life may be reduced.

## Technical data

| Description | | PGN-plus 240-1 | PGN-plus 240-2 | PGN-plus 240-1-AS | PGN-plus 240-2-AS | PGN-plus 240-1-IS | PGN-plus 240-2-IS |
|---|---|---|---|---|---|---|---|
| **ID** | | **0371108** | **0371158** | **0371408** | **0371458** | **0371468** | **0371478** |
| Stroke per finger | [mm] | 30 | 17 | 30 | 17 | 30 | 17 |
| Closing force | [N] | 4200 | 6500 | 5300 | 8340 | | |
| Opening force | [N] | 4440 | 6870 | | | 5540 | 8710 |
| Min. spring force | [N] | | | 1100 | 1840 | 1100 | 1840 |
| Weight | [kg] | 8.5 | 8.5 | 12 | 12 | 12 | 12 |
| Recommended workpiece weight | [kg] | 21.5 | 33 | 21.5 | 33 | 21.5 | 33 |
| Air consumption per double stroke | [cm³] | 646 | 646 | 1026 | 1026 | 1026 | 1026 |
| Min./max. operating pressure | [bar] | 2.5/8 | 2.5/8 | 4/6.5 | 4/6.5 | 4/6.5 | 4/6.5 |
| Nominal operating pressure | [bar] | 6 | 6 | 6 | 6 | 6 | 6 |
| Closing/opening time | [s] | 0.45/0.45 | 0.45/0.45 | 0.35/0.65 | 0.35/0.65 | 0.65/0.35 | 0.65/0.35 |
| Max. permitted finger length | [mm] | 320 | 280 | 280 | 240 | 280 | 240 |
| Max. permitted weight per finger | [kg] | 8.5 | 8.5 | 8.5 | 8.5 | 8.5 | 8.5 |
| IP class | | 40 | 40 | 40 | 40 | 40 | 40 |
| Min./max. ambient temperature | [°C] | -10/90 | -10/90 | -10/90 | -10/90 | -10/90 | -10/90 |
| Repeat accuracy | [mm] | 0.04 | 0.04 | 0.04 | 0.04 | 0.04 | 0.04 |
| Cleanroom class ISO-classification 14644-1 | | 5 | 5 | 5 | 5 | 5 | 5 |
| **OPTIONS and their characteristics** | | | | | | | |
| Dust-protection version | | **37371108** | **37371158** | **37371408** | **37371458** | **37371468** | **37371478** |
| IP class | | 64 | 64 | 64 | 64 | 64 | 64 |
| Weight | [kg] | 11.4 | 11.4 | 14.4 | 14.4 | 14.4 | 14.4 |
| Anti-corrosion version | | **38371108** | **38371158** | **38371408** | **38371458** | **38371468** | **38371478** |
| High-temperature version | | **39371108** | **39371158** | **39371408** | **39371458** | **39371468** | **39371478** |
| Min./max. ambient temperature | [°C] | -10/130 | -10/130 | -10/130 | -10/130 | -10/130 | -10/130 |
| Precision version | | **0371128** | **0371178** | **0371428** | **0371443** | | |

## Main view

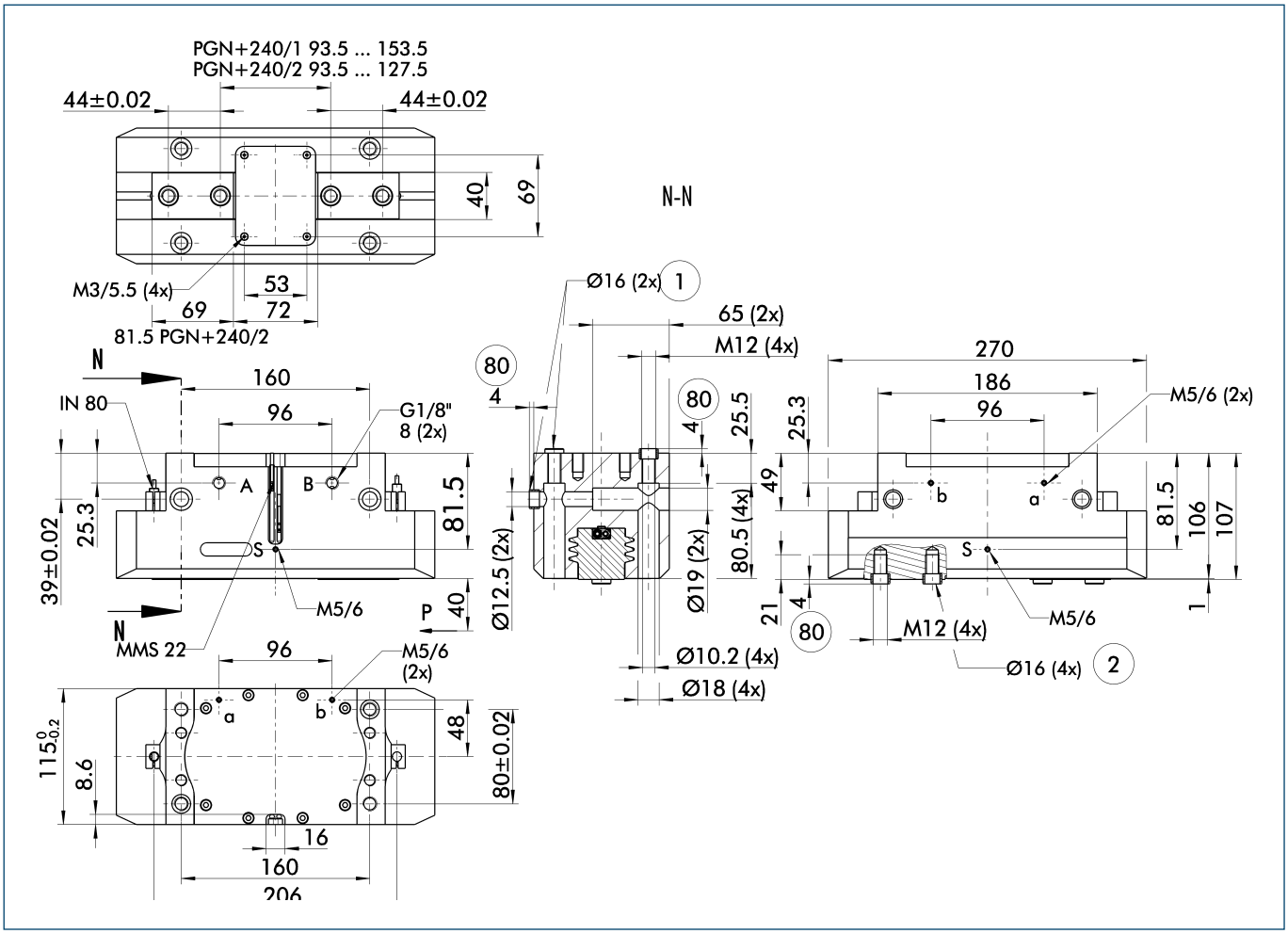


The drawing shows the gripper in the basic version with closed jaws, the dimensions do not include the options described below.

ⓘ The SDV-P pressure maintenance valve can also be used for I.D. or O.D. gripping alternatively or in addition to the spring-loaded, mechanical gripping force maintenance device (see "Accessories" catalog section).

A, a Main/direct connection, gripper opening
B, b Main/direct connection, gripper closing
S Air purge connection
① Gripper connection
② Finger connection
(80) Depth of the centering sleeve hole in the matching part

## Hose-free direct connection

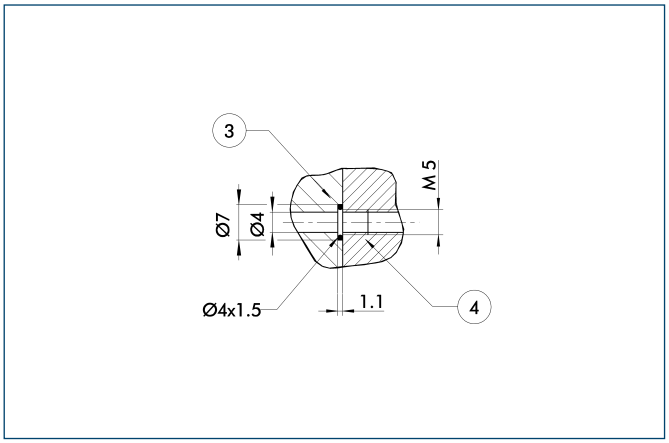


③ Adapter
④ Gripper

The direct connection is used for supplying compressed air without hoses. Instead, the pressure medium is fed through bore-holes in the mounting plate.

## AS/IS gripping force maintenance device

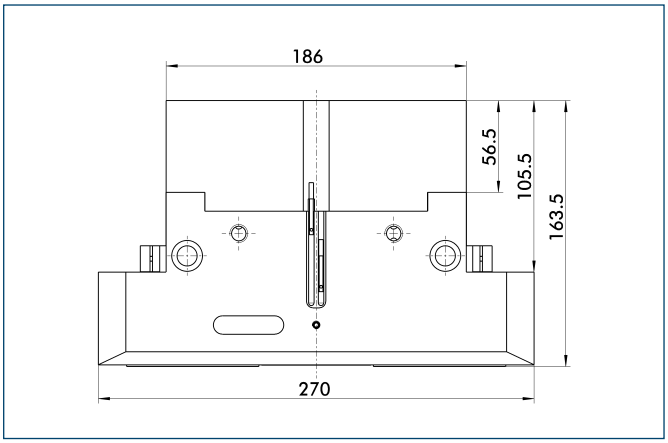


The mechanical gripping force maintenance device ensures a minimum gripping force even in case of pressure drop. This acts as closing force in the AS version, and as opening force in the IS version. In addition, the gripping force maintenance device can also be used for increasing the gripping force or for single-acting gripping.

## Dust-protection version

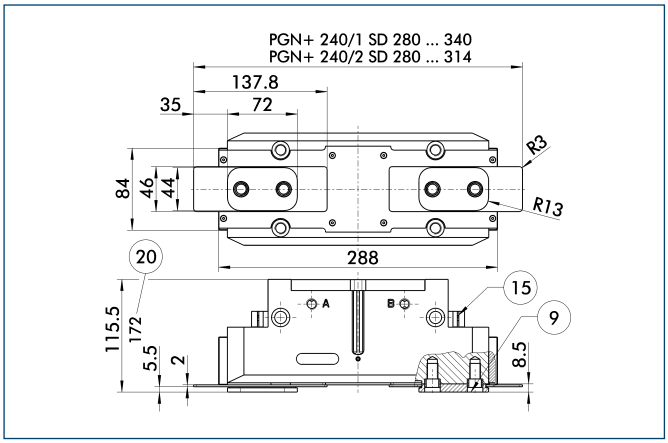


⑨ For mounting screw connection diagram, see basic version
⑮ Sealing bolt
⑳ For AS / IS version

The "dust-protection" option increases the degree of protection against penetrating substances. The screw connection diagram shifts by the height of the intermediate jaw. The finger length is still measured from the upper edge of the gripper housing.

## Precision version

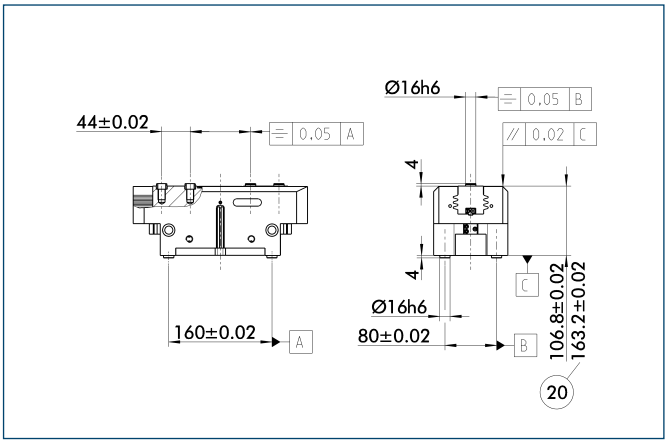


⑳ For AS / IS version

The indicated tolerances just refer to the types of precision versions shown in the chart of technical specifications. All other types of precision versions are available on request.

## Maximum permitted finger projection

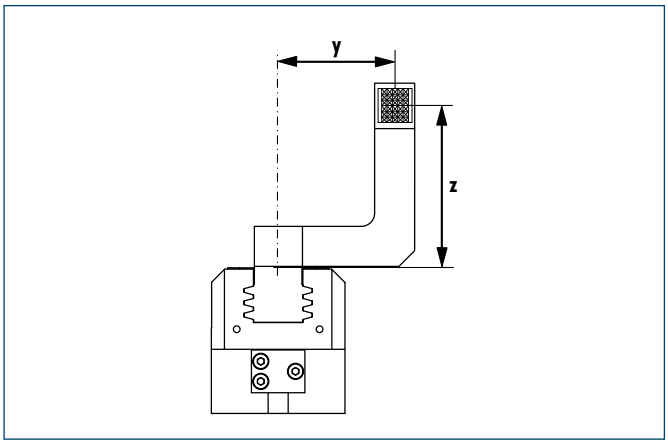


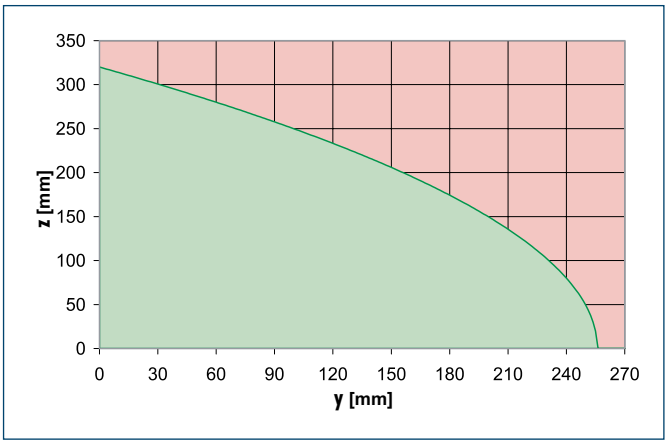


Permitted range
Inadmissible range

The curve applies to the basic version (stroke -1). For other versions, the curve will be parallel but offset in line with the max. permitted finger length.

## Quick-change Jaw System

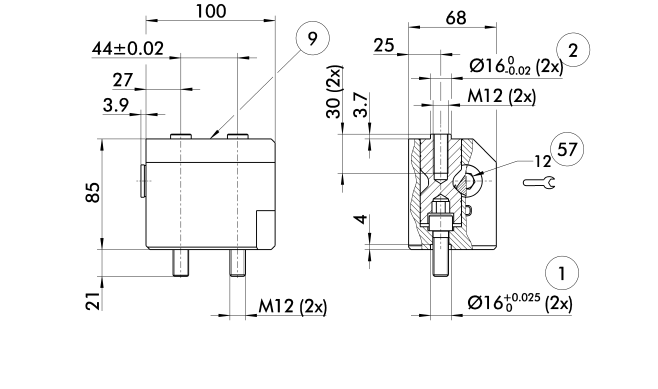


① Gripper connection
② Finger connection
⑨ For mounting screw connection diagram, see basic version
㊼ Locking

The BSWS quick-change jaw system enables top jaws to be changed on the gripper manually and rapidly. An adapter (BSWS-A) and a base (BSWS-B) are required for each gripper jaw.
For a reverse assembly without height set-up, one adapter (BSWS-A) and a kit (BSWS-U) per gripper jaw are required. Another effect of the BSWS-U is, that there are no disturbing fastening bores in the finger contour.

| Description | ID |
|---|---|
| Quick-change Jaw System adapter | |
| BSWS-A 240 | **0303034** |
| Quick-change Jaw System base | |
| BSWS-B 240 | **0303035** |
| Quick-change Jaw System reversed | |
| BSWS-U 240 | **0303047** |

## Force measuring jaws

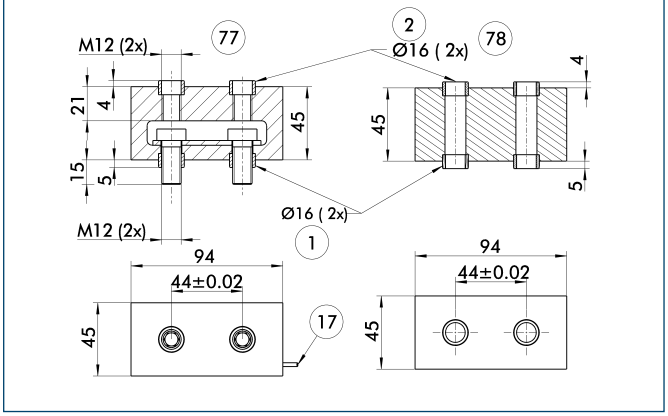


① Gripper connection
② Finger connection
⑰ Cable outlet
㊼ Active intermediate jaws
㊽ Passive intermediate jaws

Force measuring jaws measure gripping forces, but can also determine workpiece weights or dimensional deviations. There are active and passive intermediate jaws (FMS-ZBA or FMS-ZBP). At least one active force measuring jaw is required per gripper, the rest can be passive. For each active jaw, a FMS-A1 control unit and a FMS-A connection cable are required.

| Description | ID |
|---|---|
| Active intermediate jaws | |
| FMS-ZBA 240 | **0301844** |
| Passive intermediate jaws | |
| FMS-ZBP 240 | **0301845** |
| Electronic Processor | |
| FMS-A2 | **0301811** |
| Connection cables | |
| FMS-AK0200 | **0301820** |
| FMS-AK0500 | **0301821** |
| FMS-AK1000 | **0301822** |
| FMS-AK2000 | **0301823** |

## Finger blanks

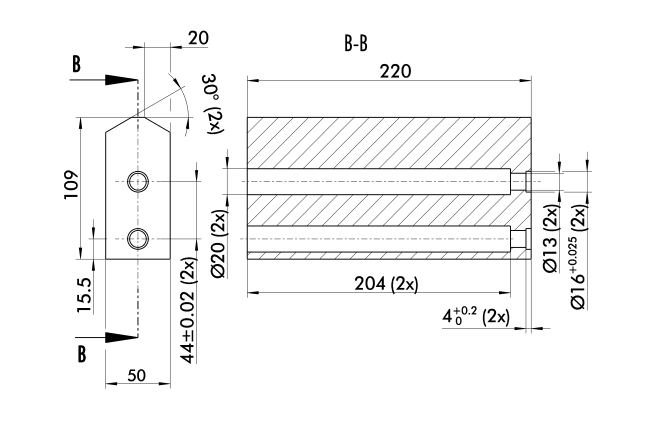


Finger blanks for customized subsequent machining

| Description | ID | Material | Scope of delivery |
|---|---|---|---|
| Finger blanks | | | |
| ABR-plus 240 | **0300017** | Aluminum | 1 |
| SBR-plus 240 | **0300027** | 16 MnCr 5 | 1 |

You can find more detailed information and individual parts of the above-mentioned accessories in the “Accessories” catalog section.

## Programmable magnetic switch

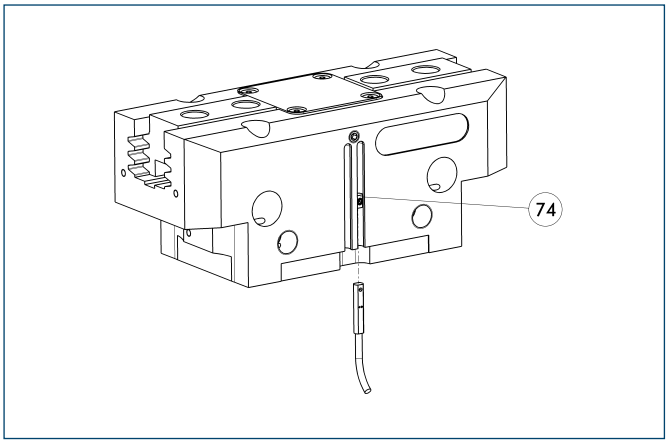


74 Stop for MMS-P

Position monitoring with two programmable positions per sensor. The end position monitoring is mounted in the C-slot.

| Description | ID | Recommended product |
|---|---|---|
| Programmable magnetic switch | | |
| MMS-P 22-S-M8-PNP | **0301370** | • |
| MMSK-P 22-S-PNP | **0301371** | |
| Connection cables | | |
| KA BG08-L 4P-0500 | **0307767** | |
| KA BG08-L 4P-1000 | **0307768** | |
| KA BW08-L 4P-0500 | **0307765** | |
| KA BW08-L 4P-1000 | **0307766** | |
| Sensor Distributor | | |
| V2-M8-4P-2XM8-3P | **0301380** | |

ⓘ Please note the minimum permitted bending radii for the sensor cables, which are generally 35 mm.

ⓘ Per gripper one sensor (closer/NO) is required, optionally a cable extension.

## Electronic magnetic switches

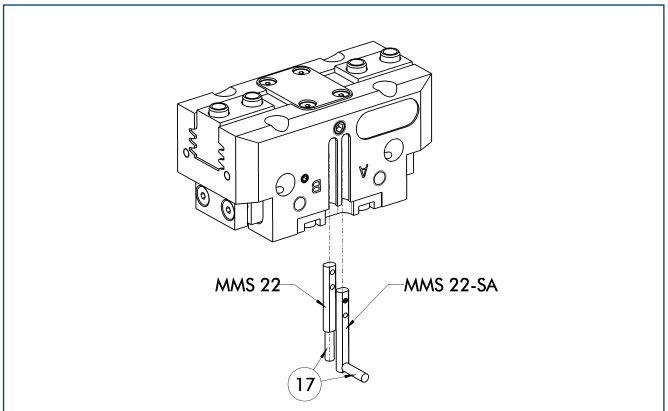


17 Cable outlet

End position monitoring for mounting in the C-slot

| Description | ID | Recommended product |
|---|---|---|
| Electronic magnetic switches | | |
| MMS 22-S-M5-PNP | **0301438** | |
| MMS 22-S-M5-NPN | **0301439** | |
| MMS 22-S-M8-PNP | **0301432** | • |
| MMS 22-S-M8-NPN | **0301433** | |
| MMSK 22-S-PNP | **0301434** | |
| MMSK 22-S-NPN | **0301435** | |
| Electronic magnetic switches with lateral cable outlet | | |
| MMS 22-S-M5-PNP-SA | **0301448** | |
| MMS 22-S-M5-NPN-SA | **0301449** | |
| MMS 22-S-M8-PNP-SA | **0301442** | • |
| MMS 22-S-M8-NPN-SA | **0301443** | |
| MMSK 22-S-PNP-SA | **0301444** | |
| MMSK 22-S-NPN-SA | **0301445** | |
| Reed Switches | | |
| RMS 22-S-M8 | **0377720** | • |
| Connection cables | | |
| KA BG05-L 3P-0300 | **0301652** | |
| KA BG08-L 3P-0300-PNP | **0301622** | |
| KA BG08-L 3P-0500-PNP | **0301623** | |
| KA BW05-L 3P-0300 | **0301650** | |
| KA BW08-L 3P-0300-NPN | **0301602** | |
| KA BW08-L 3P-0300-PNP | **0301594** | |
| KA BW08-L 3P-0500-NPN | **9641116** | |
| KA BW08-L 3P-0500-PNP | **0301502** | |
| Cable extensions | | |
| KV BW08-SG08 3P-0030-PNP | **0301495** | |
| KV BW08-SG08 3P-0100-PNP | **0301496** | |
| KV BW08-SG08 3P-0200-PNP | **0301497** | |

ⓘ Two sensors (closer/NO) are required for each gripper, plus extension cables as an option.

ⓘ Please note the minimum permitted bending radii for the sensor cables, which are generally 35 mm.

You can find more detailed information and individual parts of the above-mentioned accessories in the “Accessories” catalog section.

## Inductive proximity switches

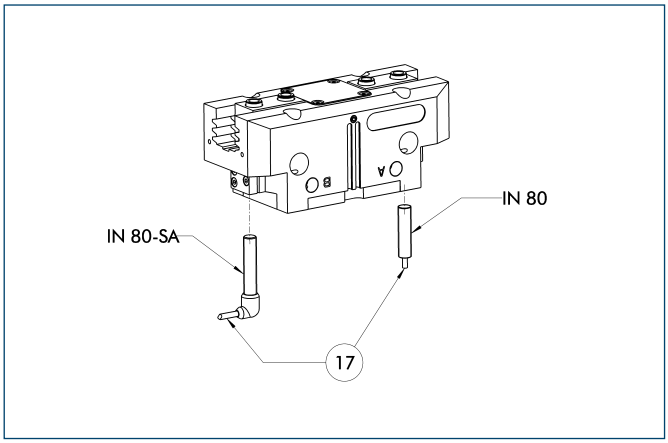


⑰ Cable outlet

End position monitoring for direct mounting

| Description | ID | Recommended product |
|---|---|---|
| Inductive proximity switches | | |
| IN 80-S-M8 | **0301478** | • |
| IN 80-S-M12 | **0301578** | |
| INK 80-S | **0301550** | |
| Inductive proximity switch with lateral outlet | | |
| IN 80-S-M12-SA | **0301587** | |
| IN 80-S-M8-SA | **0301483** | • |
| INK 80-S-SA | **0301566** | |
| Connection cables | | |
| KA BG08-L 3P-0300-PNP | **0301622** | |
| KA BG08-L 3P-0500-PNP | **0301623** | |
| KA BG12-L 3P-0500-PNP | **30016369** | |
| KA BW08-L 3P-0300-PNP | **0301594** | |
| KA BW08-L 3P-0500-PNP | **0301502** | |
| KA BW12-L 3P-0300-PNP | **0301503** | |
| KA BW12-L 3P-0500-PNP | **0301507** | |
| Cable extensions | | |
| KV BG12-SG12 3P-0030-PNP | **0301999** | |
| KV BG12-SG12 3P-0060-PNP | **0301998** | |
| KV BW08-SG08 3P-0030-PNP | **0301495** | |
| KV BW08-SG08 3P-0100-PNP | **0301496** | |
| KV BW08-SG08 3P-0200-PNP | **0301497** | |
| KV BW12-SG12 3P-0030-PNP | **0301595** | |
| KV BW12-SG12 3P-0100-PNP | **0301596** | |
| KV BW12-SG12 3P-0200-PNP | **0301597** | |

ⓘ Two sensors (closer/NO) are required for each gripper, plus extension cables as an option.
ⓘ Please note the minimum permitted bending radii for the sensor cables, which are generally 35 mm.

## Cylindrical Reed Switches

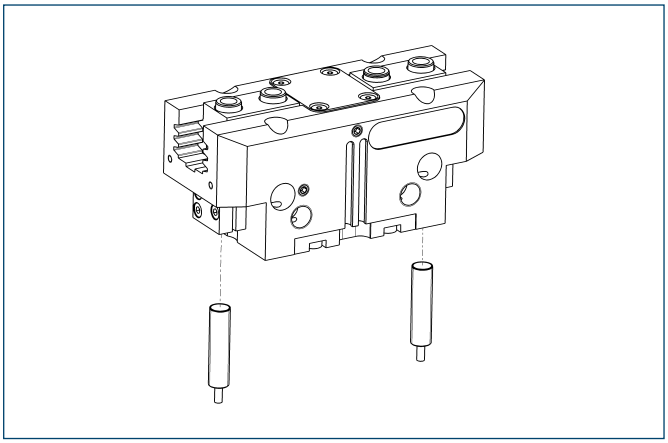

End position monitoring mounted with mounting kit

| Description | ID |
|---|---|
| Mounting kit for proximity switch | |
| AS-RMS 80 PGN/PZN-plus 160-380 | **0377727** |
| Reed Switches | |
| RMS 80-S-M8 | **0377721** |

ⓘ Two sensors (closer/NO) are required for each gripper, plus extension cables as an option.
ⓘ This mounting kit needs to be ordered optionally as an accessory.
ⓘ Please note the minimum permitted bending radii for the sensor cables, which are generally 35 mm.

You can find more detailed information and individual parts of the above-mentioned accessories in the “Accessories” catalog section.

## Analog position sensor

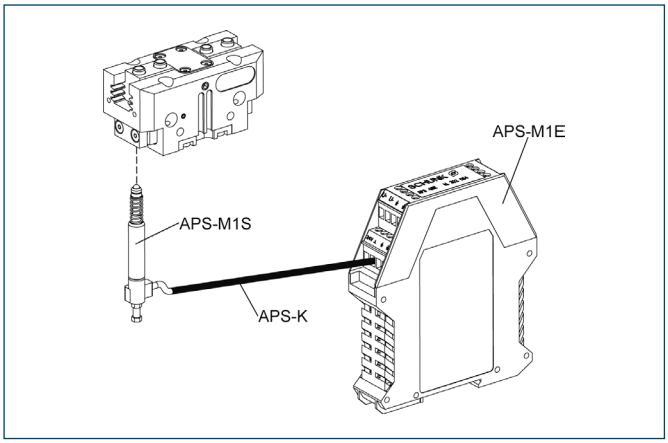


Analog multi position monitoring for any desired positions

| Description | ID |
|---|---|
| Mounting kit | |
| AS-APS-M1-160/1 and 240/2 | **0302083** |
| AS-APS-M1-240/1 | **0302087** |
| Connection cables | |
| APS-K0200 | **0302066** |
| APS-K0700 | **0302068** |
| Electronic Processor | |
| APS-M1E | **0302064** |
| Sensor | |
| APS-M1S | **0302062** |

ⓘ When using an APS system, for each gripper a mounting kit (AS-APS), an APS sensor (APS-M 1S, incl. 3 m cable) as well as an electronics (APS-M1e) are required.

ⓘ An extension cable (APS-K) can be connected between the sensor and the electronics as an option. The max. cable length between the sensor and the electronics is 10 m, between the electronics and their control unit (PLC) it is max. 1 m.

## Flexible Position Sensor

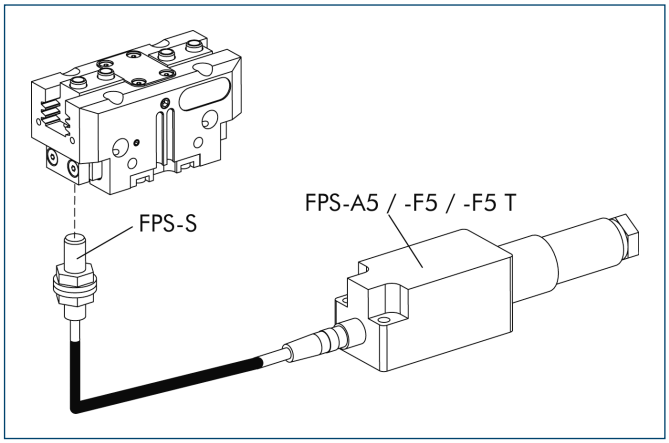


Flexible position monitoring of up to five positions

| Description | ID |
|---|---|
| Mounting kit for FPS | |
| AS-PGN/PZN-plus 240/1 | **0301643** |
| AS-PGN/PZN-plus 240/2 | **0301644** |
| Electronic Processor | |
| FPS-F5 | **0301805** |
| FPS-F5 T | **0301807** |
| Sensor | |
| FPS-S M8 | **0301704** |

ⓘ When using a FPS system, a FPS sensor (FPS-S) and a control unit (FPS-F5 / F5 T or A5) are required for each gripper as well as a mounting kit (AS), if listed. Cable extensions (KV) are available as options in the "Accessories" catalog section.

You can find more detailed information and individual parts of the above-mentioned accessories in the "Accessories" catalog section.

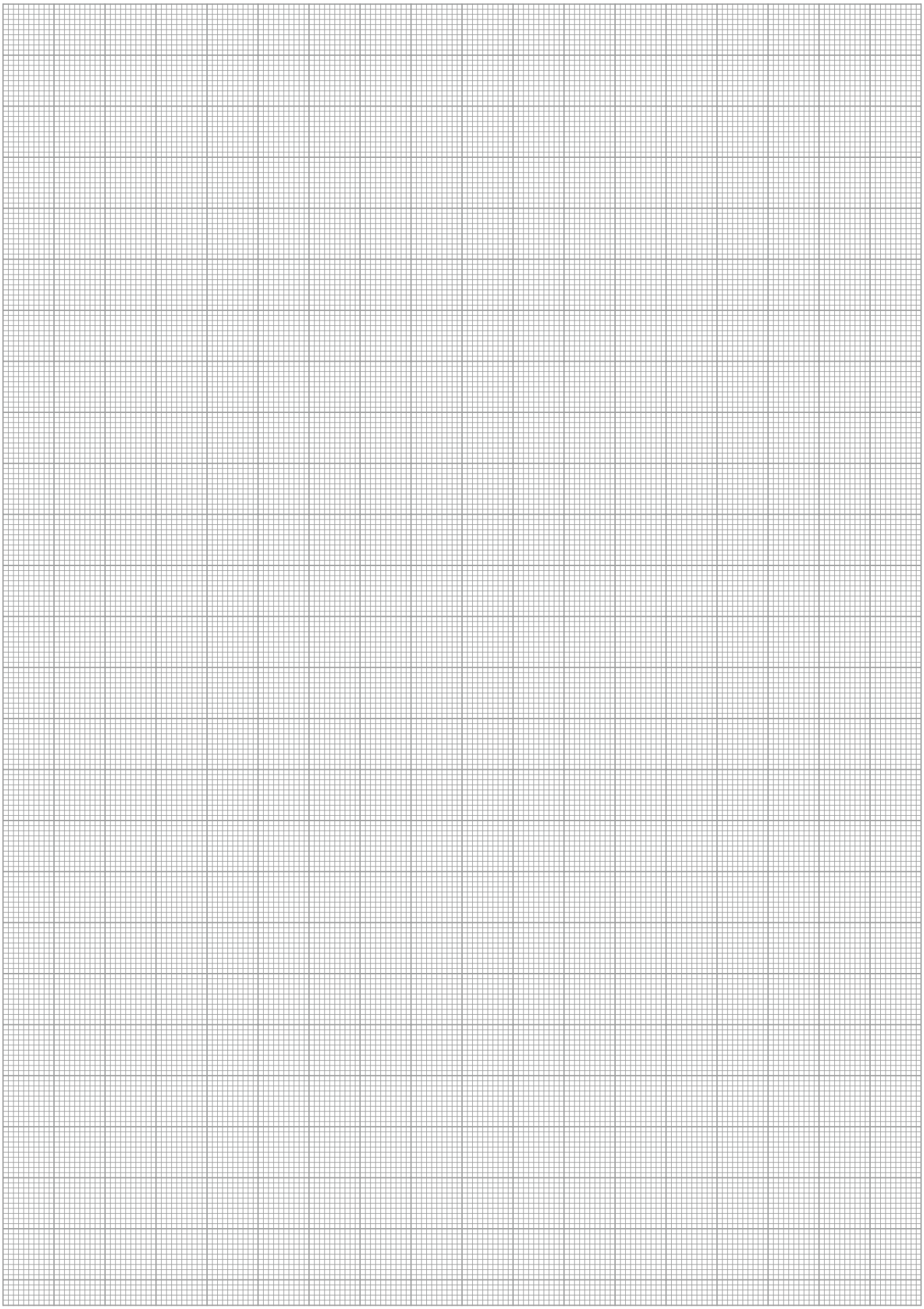

# PGN-plus 300

**Pneumatic • 2-Finger Parallel Gripper • Universal Gripper**



## Gripping force, I.D. gripping

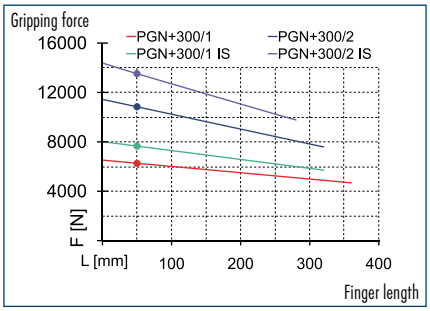


## Gripping force, O.D. gripping

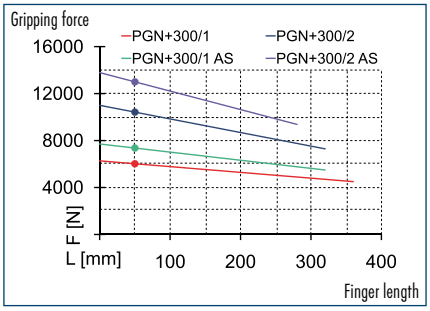


## Finger load

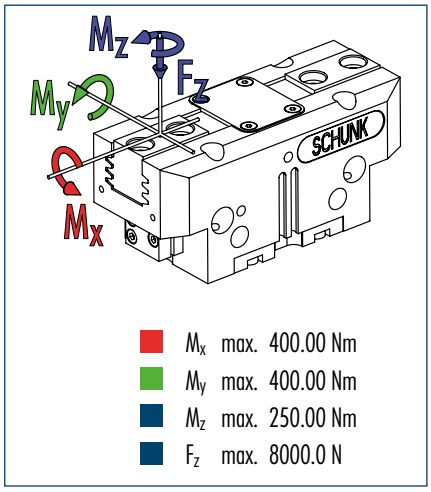


ⓘ The indicated moments and forces are static values, apply per base jaw and may occur simultaneously. $M_y$ may arise in addition to the moment generated by the gripping force itself. If the max. permitted finger weight is exceeded, it is imperative to throttle the air pressure so that the jaw movement occurs without any hitting or bouncing. Service life may be reduced.

## Technical data

| Description | | PGN-plus 300-1 | PGN-plus 300-2 | PGN-plus 300-1-AS | PGN-plus 300-2-AS | PGN-plus 300-1-IS | PGN-plus 300-2-IS |
|---|---|---|---|---|---|---|---|
| **ID** | | **0371106** | **0371156** | **0371406** | **0371456** | **0371466** | **0371476** |
| Stroke per finger | [mm] | 35 | 20 | 35 | 20 | 35 | 20 |
| Closing force | [N] | 6000 | 10300 | 7400 | 12500 | | |
| Opening force | [N] | 6260 | 10800 | | | 7660 | 13000 |
| Min. spring force | [N] | | | 1400 | 2200 | 1400 | 2200 |
| Weight | [kg] | 13.9 | 13.9 | 17.2 | 17.2 | 17.2 | 17.2 |
| Recommended workpiece weight | [kg] | 30 | 51.5 | 30 | 51.5 | 30 | 51.5 |
| Air consumption per double stroke | [cm³] | 1030 | 1030 | 1585 | 1585 | 1585 | 1585 |
| Min./max. operating pressure | [bar] | 2.5/8 | 2.5/8 | 4/6.5 | 4/6.5 | 4/6.5 | 4/6.5 |
| Nominal operating pressure | [bar] | 6 | 6 | 6 | 6 | 6 | 6 |
| Closing/opening time | [s] | 0.5/0.5 | 0.5/0.5 | 0.4/0.7 | 0.4/0.7 | 0.7/0.4 | 0.7/0.4 |
| Max. permitted finger length | [mm] | 350 | 300 | 300 | 250 | 300 | 250 |
| Max. permitted weight per finger | [kg] | 11.5 | 11.5 | 11.5 | 11.5 | 11.5 | 11.5 |
| IP class | | 40 | 40 | 40 | 40 | 40 | 40 |
| Min./max. ambient temperature | [°C] | -10/90 | -10/90 | -10/90 | -10/90 | -10/90 | -10/90 |
| Repeat accuracy | [mm] | 0.05 | 0.05 | 0.05 | 0.05 | 0.05 | 0.05 |
| Cleanroom class ISO-classification 14644-1 | | 5 | 5 | 5 | 5 | 5 | 5 |
| **OPTIONS and their characteristics** | | | | | | | |
| Dust-protection version | | **37371106** | **37371156** | **37371406** | **37371456** | **37371466** | **37371476** |
| IP class | | 64 | 64 | 64 | 64 | 64 | 64 |
| Weight | [kg] | 17.6 | 17.6 | 21.3 | 21.3 | 21.3 | 21.3 |
| Anti-corrosion version | | **38371106** | **38371156** | **38371406** | **38371456** | **38371466** | **38371476** |
| High-temperature version | | **39371106** | **39371156** | **39371406** | **39371456** | **39371466** | **39371476** |
| Min./max. ambient temperature | [°C] | -10/130 | -10/130 | -10/130 | -10/130 | -10/130 | -10/130 |
| Precision version | | **0371129** | **0371179** | **0371429** | **0371444** | | |

## Main view

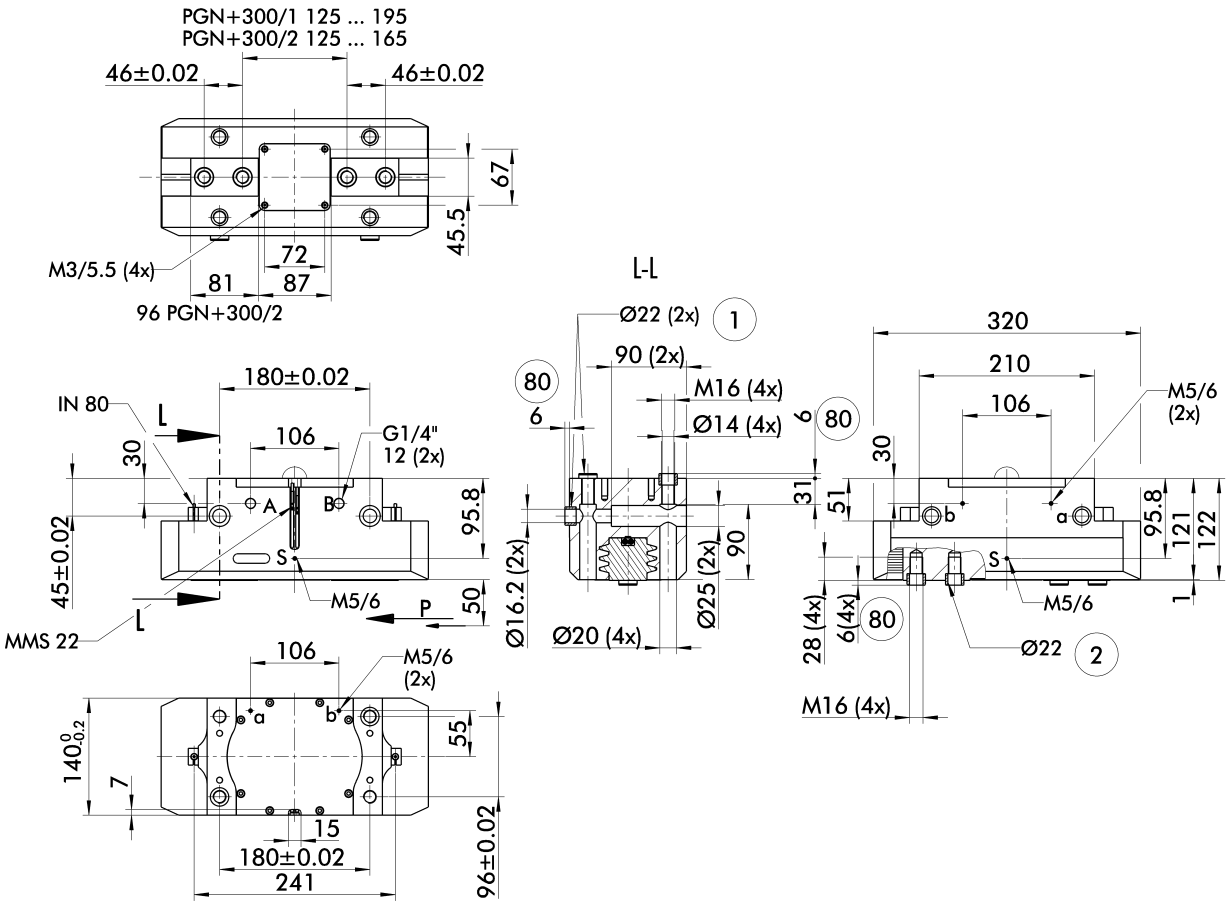


The drawing shows the gripper in the basic version with closed jaws, the dimensions do not include the options described below.

ⓘ The SDV-P pressure maintenance valve can also be used for I.D. or O.D. gripping alternatively or in addition to the spring-loaded, mechanical gripping force maintenance device (see "Accessories" catalog section).

A, a Main/direct connection, gripper opening
B, b Main/direct connection, gripper closing
S Air purge connection
① Gripper connection
② Finger connection
(80) Depth of the centering sleeve hole in the matching part

## Hose-free direct connection

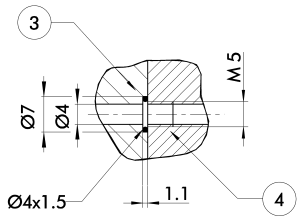


③ Adapter
④ Gripper

The direct connection is used for supplying compressed air without hoses. Instead, the pressure medium is fed through bore-holes in the mounting plate.

## AS/IS gripping force maintenance device

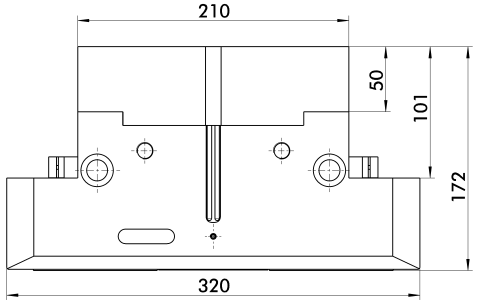


The mechanical gripping force maintenance device ensures a minimum gripping force even in case of pressure drop. This acts as closing force in the AS version, and as opening force in the IS version. In addition, the gripping force maintenance device can also be used for increasing the gripping force or for single-acting gripping.

## Dust-protection version

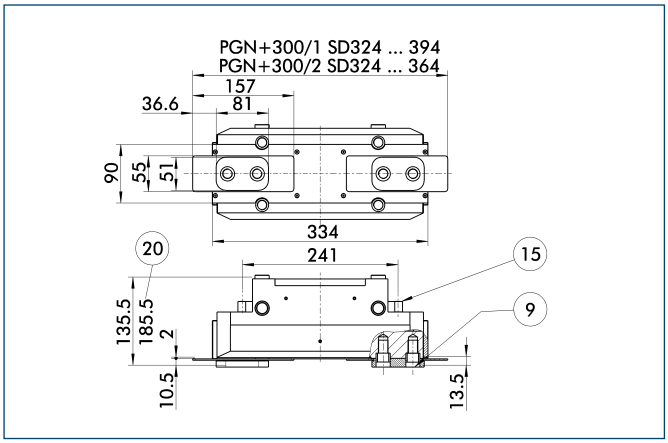


⑨ For mounting screw connection diagram, see basic version
⑮ Sealing bolt
⑳ For AS / IS version

The “dust-protection” option increases the degree of protection against penetrating substances. The screw connection diagram shifts by the height of the intermediate jaw. The finger length is still measured from the upper edge of the gripper housing.

## Precision version

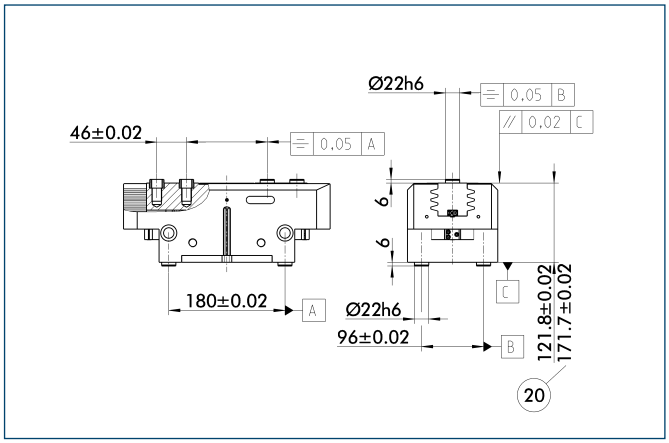


⑳ For AS / IS version

The indicated tolerances just refer to the types of precision versions shown in the chart of technical specifications. All other types of precision versions are available on request.

## Maximum permitted finger projection

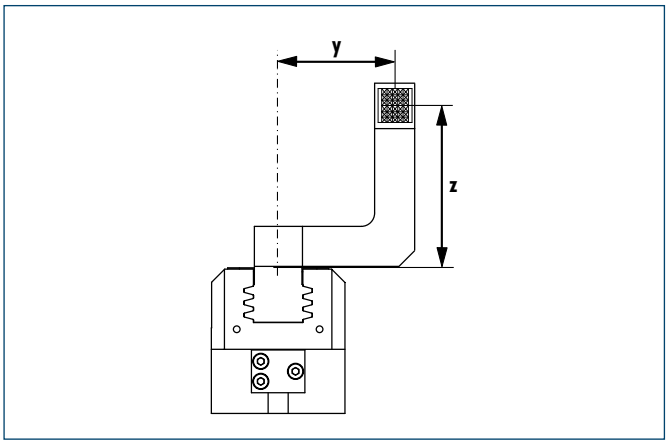


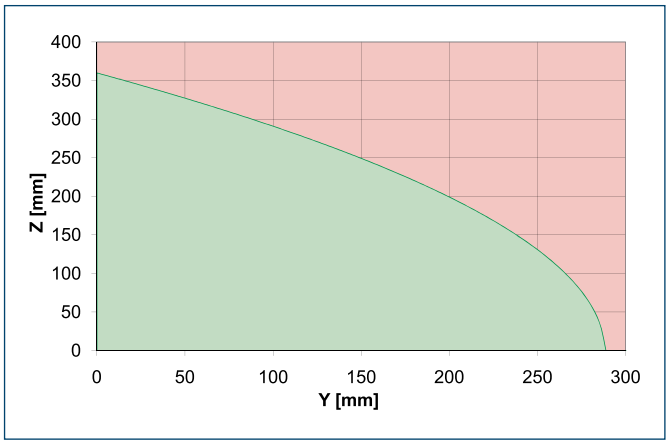


Permitted range
Inadmissible range

The curve applies to the basic version (stroke -1). For other versions, the curve will be parallel but offset in line with the max. permitted finger length.

## Quick-change Jaw System

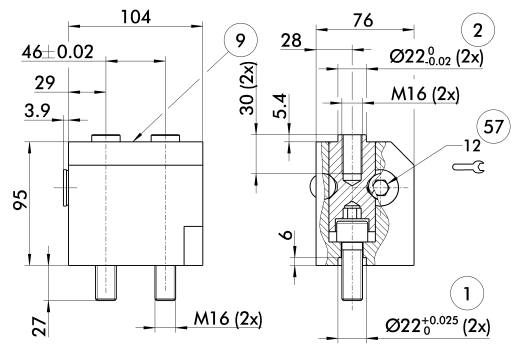


① Gripper connection
② Finger connection
⑨ For mounting screw connection diagram, see basic version
㊼ Locking

The BSWS quick-change jaw system enables top jaws to be changed on the gripper manually and rapidly. An adapter (BSWS-A) and a base (BSWS-B) are required for each gripper jaw.
For a reverse assembly without height set-up, one adapter (BSWS-A) and a kit (BSWS-U) per gripper jaw are required. Another effect of the BSWS-U is, that there are no disturbing fastening bores in the finger contour.

| Description | ID |
|---|---|
| Quick-change Jaw System adapter | |
| BSWS-A 300 | **0303036** |
| Quick-change Jaw System base | |
| BSWS-B 300 | **0303037** |
| Quick-change Jaw System reversed | |
| BSWS-U 300 | **0303048** |

## Force measuring jaws

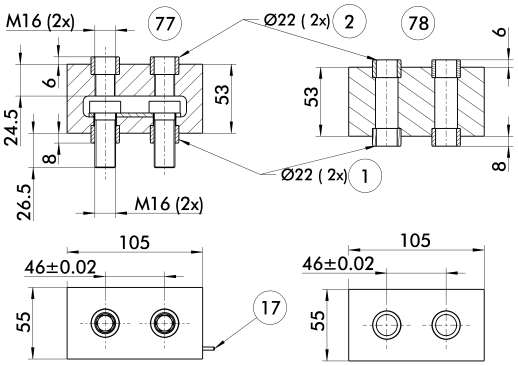


① Gripper connection
② Finger connection
⑰ Cable outlet
㊼ Active intermediate jaws
㊽ Passive intermediate jaws

Force measuring jaws measure gripping forces, but can also determine workpiece weights or dimensional deviations. There are active and passive intermediate jaws (FMS-ZBA or FMS-ZBP). At least one active force measuring jaw is required per gripper, the rest can be passive. For each active jaw, a FMS-A1 control unit and a FMS-A connection cable are required.

| Description | ID |
|---|---|
| Active intermediate jaws | |
| FMS-ZBA 300 | **0301846** |
| Passive intermediate jaws | |
| FMS-ZBP 300 | **0301847** |
| Electronic Processor | |
| FMS-A2 | **0301811** |
| Connection cables | |
| FMS-AK0200 | **0301820** |
| FMS-AK0500 | **0301821** |
| FMS-AK1000 | **0301822** |
| FMS-AK2000 | **0301823** |

## Finger blanks

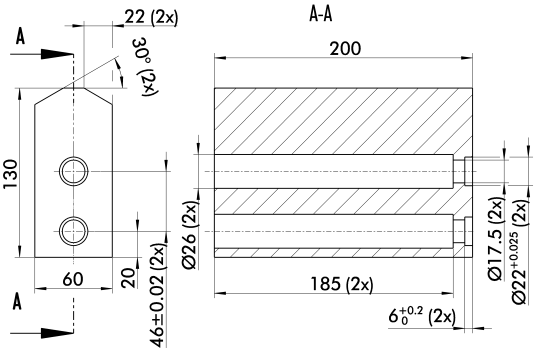


Finger blanks for customized subsequent machining

| Description | ID | Material | Scope of delivery |
|---|---|---|---|
| Finger blanks | | | |
| ABR-plus 300 | **0300016** | Aluminum | 1 |
| SBR-plus 300 | **0300026** | 16 MnCr 5 | 1 |

You can find more detailed information and individual parts of the above-mentioned accessories in the “Accessories” catalog section.

## Electronic magnetic switches

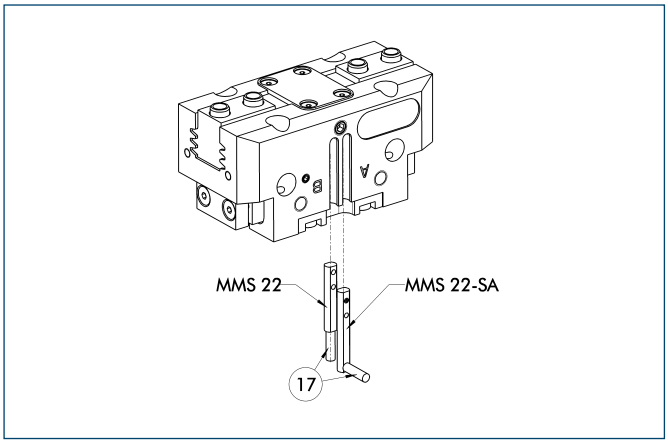


⑰ Cable outlet

End position monitoring for mounting in the C-slot

| Description | ID | Recommended product |
|---|---|---|
| Electronic magnetic switches | | |
| MMS 22-S-M5-PNP | **0301438** | |
| MMS 22-S-M5-NPN | **0301439** | |
| MMS 22-S-M8-PNP | **0301432** | • |
| MMS 22-S-M8-NPN | **0301433** | |
| MMSK 22-S-PNP | **0301434** | |
| MMSK 22-S-NPN | **0301435** | |
| Electronic magnetic switches with lateral cable outlet | | |
| MMS 22-S-M5-PNP-SA | **0301448** | |
| MMS 22-S-M5-NPN-SA | **0301449** | |
| MMS 22-S-M8-PNP-SA | **0301442** | • |
| MMS 22-S-M8-NPN-SA | **0301443** | |
| MMSK 22-S-PNP-SA | **0301444** | |
| MMSK 22-S-NPN-SA | **0301445** | |
| Reed Switches | | |
| RMS 22-S-M8 | **0377720** | • |
| Connection cables | | |
| KA BG05-L 3P-0300 | **0301652** | |
| KA BG08-L 3P-0300-PNP | **0301622** | |
| KA BG08-L 3P-0500-PNP | **0301623** | |
| KA BW05-L 3P-0300 | **0301650** | |
| KA BW08-L 3P-0300-NPN | **0301602** | |
| KA BW08-L 3P-0300-PNP | **0301594** | |
| KA BW08-L 3P-0500-NPN | **9641116** | |
| KA BW08-L 3P-0500-PNP | **0301502** | |
| Cable extensions | | |
| KV BW08-SG08 3P-0030-PNP | **0301495** | |
| KV BW08-SG08 3P-0100-PNP | **0301496** | |
| KV BW08-SG08 3P-0200-PNP | **0301497** | |

ⓘ Two sensors (closer/NO) are required for each gripper, plus extension cables as an option.

ⓘ Please note the minimum permitted bending radii for the sensor cables, which are generally 35 mm.

## Inductive proximity switches

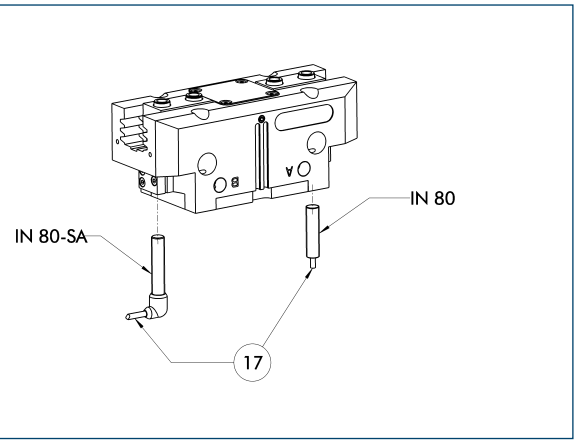


⑰ Cable outlet

End position monitoring for direct mounting

| Description | ID | Recommended product |
|---|---|---|
| Inductive proximity switches | | |
| IN 80-S-M8 | **0301478** | • |
| IN 80-S-M12 | **0301578** | |
| INK 80-S | **0301550** | |
| Inductive proximity switch with lateral outlet | | |
| IN 80-S-M12-SA | **0301587** | |
| IN 80-S-M8-SA | **0301483** | • |
| INK 80-S-SA | **0301566** | |
| Connection cables | | |
| KA BG08-L 3P-0300-PNP | **0301622** | |
| KA BG08-L 3P-0500-PNP | **0301623** | |
| KA BG12-L 3P-0500-PNP | **30016369** | |
| KA BW08-L 3P-0300-PNP | **0301594** | |
| KA BW08-L 3P-0500-PNP | **0301502** | |
| KA BW12-L 3P-0300-PNP | **0301503** | |
| KA BW12-L 3P-0500-PNP | **0301507** | |
| Cable extensions | | |
| KV BG12-SG12 3P-0030-PNP | **0301999** | |
| KV BG12-SG12 3P-0060-PNP | **0301998** | |
| KV BW08-SG08 3P-0030-PNP | **0301495** | |
| KV BW08-SG08 3P-0100-PNP | **0301496** | |
| KV BW08-SG08 3P-0200-PNP | **0301497** | |
| KV BW12-SG12 3P-0030-PNP | **0301595** | |
| KV BW12-SG12 3P-0100-PNP | **0301596** | |
| KV BW12-SG12 3P-0200-PNP | **0301597** | |

ⓘ Two sensors (closer/NO) are required for each gripper, plus extension cables as an option.

ⓘ Please note the minimum permitted bending radii for the sensor cables, which are generally 35 mm.


You can find more detailed information and individual parts of the above-mentioned accessories in the “Accessories” catalog section.

## Cylindrical Reed Switches

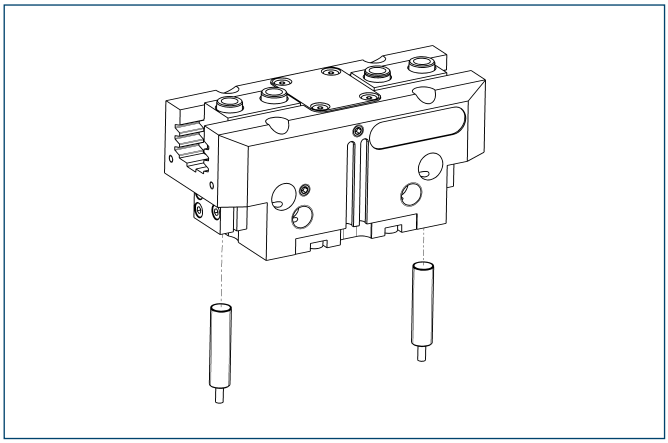

End position monitoring mounted with mounting kit

| Description | ID |
|---|---|
| Mounting kit for proximity switch | |
| AS-RMS 80 PGN/PZN-plus 160-380 | **0377727** |
| Reed Switches | |
| RMS 80-S-M8 | **0377721** |

ⓘ Two sensors (closer/NO) are required for each gripper, plus extension cables as an option.
ⓘ This mounting kit needs to be ordered optionally as an accessory.
ⓘ Please note the minimum permitted bending radii for the sensor cables, which are generally 35 mm.

## Analog position sensor

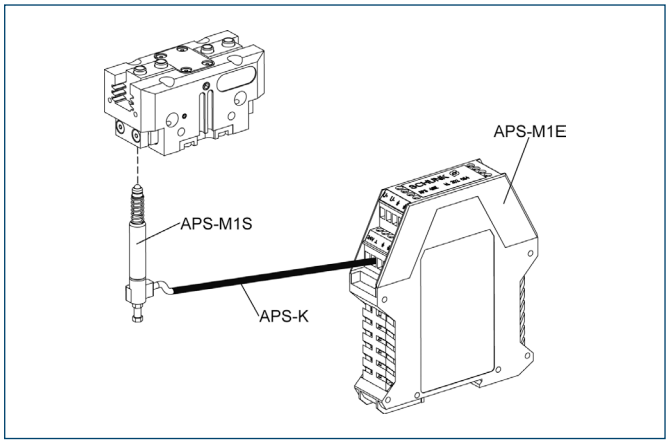


Analog multi position monitoring for any desired positions

| Description | ID |
|---|---|
| Mounting kit | |
| AS-APS-M1-300/1 | **0302088** |
| AS-APS-M1-300/2 | **0302089** |
| Connection cables | |
| APS-K0200 | **0302066** |
| APS-K0700 | **0302068** |
| Electronic Processor | |
| APS-M1E | **0302064** |
| Sensor | |
| APS-M1S | **0302062** |

ⓘ When using an APS system, for each gripper a mounting kit (AS-APS), an APS sensor (APS-M 1S, incl. 3 m cable) as well as an electronics (APS-M1e) are required.
ⓘ An extension cable (APS-K) can be connected between the sensor and the electronics as an option. The max. cable length between the sensor and the electronics is 10 m, between the electronics and their control unit (PLC) it is max. 1 m.

You can find more detailed information and individual parts of the above-mentioned accessories in the “Accessories” catalog section.

## Flexible Position Sensor

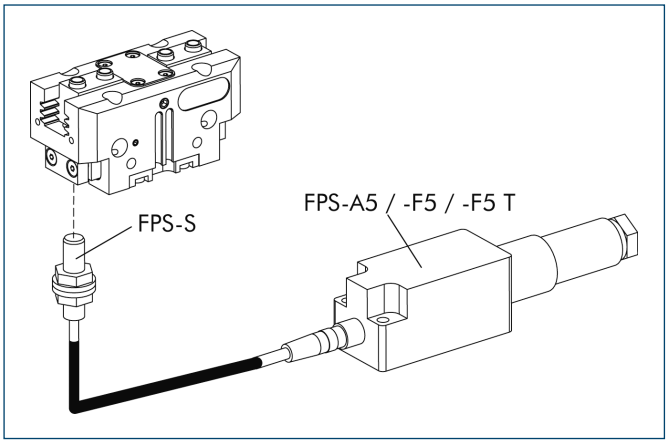


Flexible position monitoring of up to five positions

| Description | ID |
|---|---|
| Mounting kit for FPS | |
| AS-PGN/PZN-plus 300-2 | **0301642** |
| Electronic Processor | |
| FPS-F5 | **0301805** |
| FPS-F5 T | **0301807** |
| Sensor | |
| FPS-S M8 | **0301704** |

ⓘ When using a FPS system, a FPS sensor (FPS-S) and a control unit (FPS-F5 / F5 T or A5) are required for each gripper as well as a mounting kit (AS), if listed. Cable extensions (KV) are available as options in the “Accessories” catalog section.

You can find more detailed information and individual parts of the above-mentioned accessories in the “Accessories” catalog section.

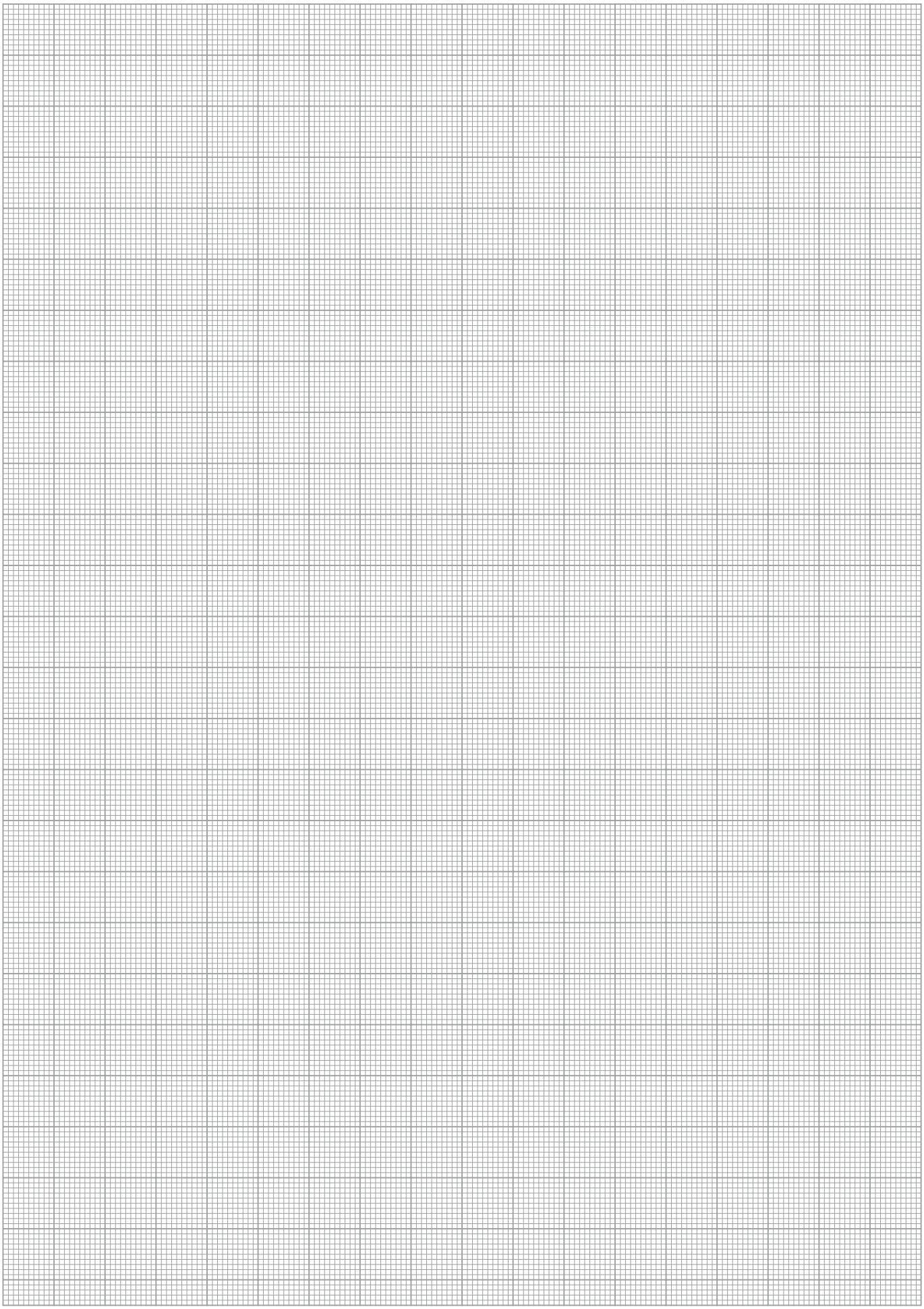

# PGN-plus 380

**Pneumatic • 2-Finger Parallel Gripper • Universal Gripper**

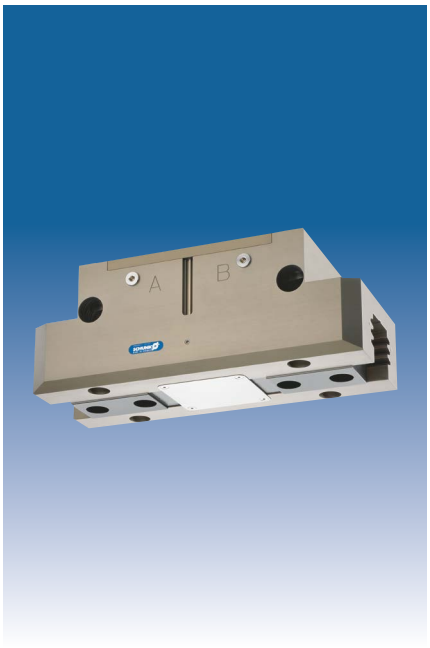

## Gripping force, I.D. gripping

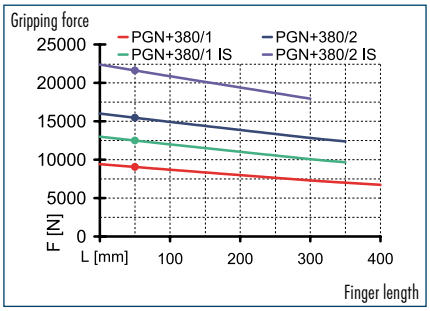


## Gripping force, O.D. gripping

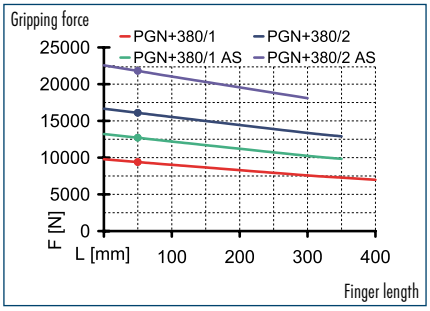


## Finger load

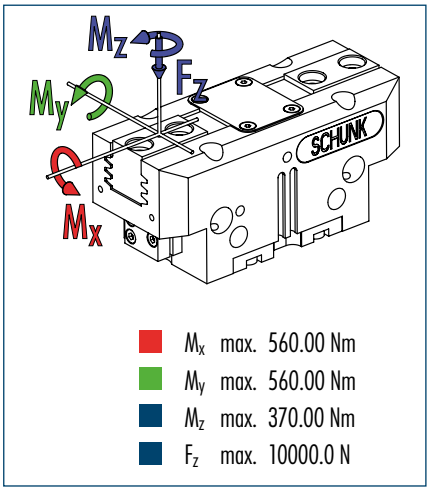


- $M_x$ max. 560.00 Nm
- $M_y$ max. 560.00 Nm
- $M_z$ max. 370.00 Nm
- $F_z$ max. 10000.0 N

ⓘ The indicated moments and forces are static values, apply per base jaw and may occur simultaneously. $M_y$ may arise in addition to the moment generated by the gripping force itself. If the max. permitted finger weight is exceeded, it is imperative to throttle the air pressure so that the jaw movement occurs without any hitting or bouncing. Service life may be reduced.

## Technical data

| Description | | PGN-plus 380-1 | PGN-plus 380-2 | PGN-plus 380-1-AS | PGN-plus 380-2-AS | PGN-plus 380-1-IS | PGN-plus 380-2-IS |
|---|---|---|---|---|---|---|---|
| **ID** | | **0371107** | **0371157** | **0371407** | **0371457** | **0371467** | **0371477** |
| Stroke per finger | [mm] | 45 | 26 | 45 | 26 | 45 | 26 |
| Closing force | [N] | 9050 | 15450 | 12350 | 21150 | | |
| Opening force | [N] | 9400 | 16100 | | | 12700 | 21800 |
| Min. spring force | [N] | | | 3300 | 5700 | 3300 | 5700 |
| Weight | [kg] | 28 | 29 | 36.5 | 37.5 | 36.5 | 37.5 |
| Recommended workpiece weight | [kg] | 47 | 80.5 | 47 | 80.5 | 47 | 80.5 |
| Air consumption per double stroke | [cm³] | 1714 | 1714 | 1714 | 1714 | 1714 | 1714 |
| Min./max. operating pressure | [bar] | 2.5/8 | 2.5/8 | 4/6.5 | 4/6.5 | 4/6.5 | 4/6.5 |
| Nominal operating pressure | [bar] | 6 | 6 | 6 | 6 | 6 | 6 |
| Closing/opening time | [s] | 0.6/0.6 | 0.6/0.6 | 0.5/0.8 | 0.5/0.8 | 0.8/0.5 | 0.8/0.5 |
| Max. permitted finger length | [mm] | 400 | 350 | 350 | 300 | 350 | 300 |
| Max. permitted weight per finger | [kg] | 17 | 17 | 17 | 17 | 17 | 17 |
| IP class | | 40 | 40 | 40 | 40 | 40 | 40 |
| Min./max. ambient temperature | [°C] | -10/90 | -10/90 | -10/90 | -10/90 | -10/90 | -10/90 |
| Repeat accuracy | [mm] | 0.05 | 0.05 | 0.05 | 0.05 | 0.05 | 0.05 |
| Cleanroom class ISO-classification 14644-1 | | 5 | 5 | 5 | 5 | 5 | 5 |
| **OPTIONS and their characteristics** | | | | | | | |
| Dust-protection version | | **37371107** | **37371157** | **37371407** | **37371457** | **37371467** | **37371477** |
| IP class | | 64 | 64 | 64 | 64 | 64 | 64 |
| Weight | [kg] | 30 | 31 | 38.5 | 39.5 | 38.5 | 39.5 |
| Anti-corrosion version | | **38371107** | **38371157** | **38371407** | **38371457** | **38371467** | **38371477** |
| High-temperature version | | **39371107** | **39371157** | **39371407** | **39371457** | **39371467** | **39371477** |
| Min./max. ambient temperature | [°C] | -10/130 | -10/130 | -10/130 | -10/130 | -10/130 | -10/130 |
| Precision version | | **0371130** | **0371180** | **0371430** | **0371445** | | |

## Main view

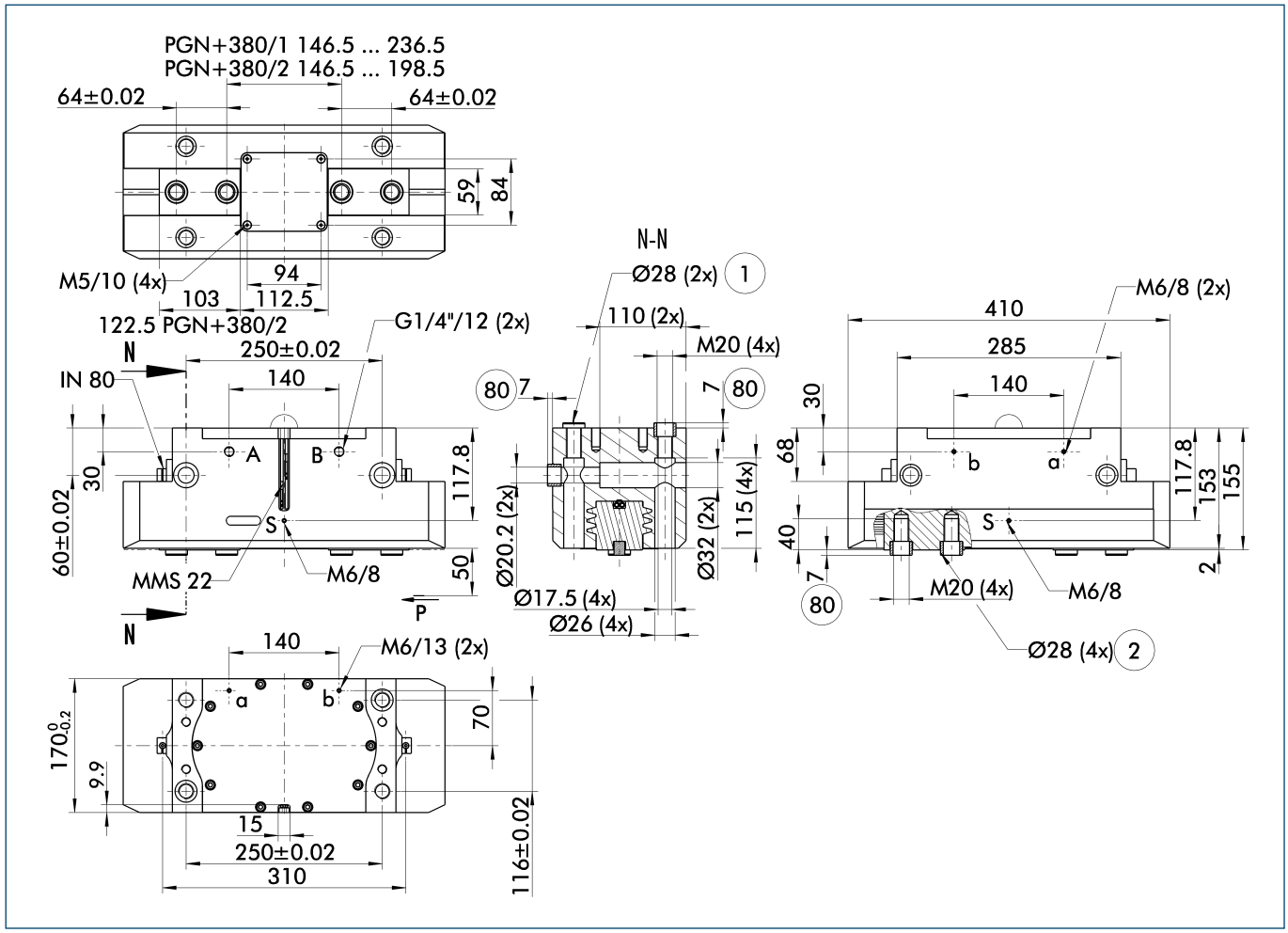


The drawing shows the gripper in the basic version with closed jaws, the dimensions do not include the options described below.

ⓘ The SDV-P pressure maintenance valve can also be used for I.D. or O.D. gripping alternatively or in addition to the spring-loaded, mechanical gripping force maintenance device (see "Accessories" catalog section).

A, a Main/direct connection, gripper opening
B, b Main/direct connection, gripper closing
S Air purge connection
① Gripper connection
② Finger connection
80 Depth of the centering sleeve hole in the matching part

## Hose-free direct connection

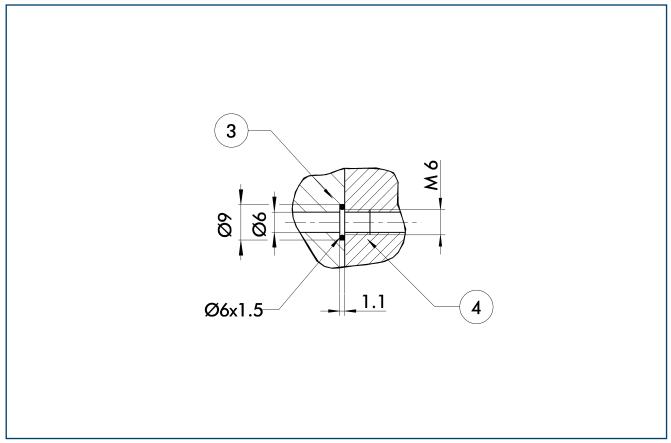


③ Adapter
④ Gripper

The direct connection is used for supplying compressed air without hoses. Instead, the pressure medium is fed through bore-holes in the mounting plate.

## AS/IS gripping force maintenance device

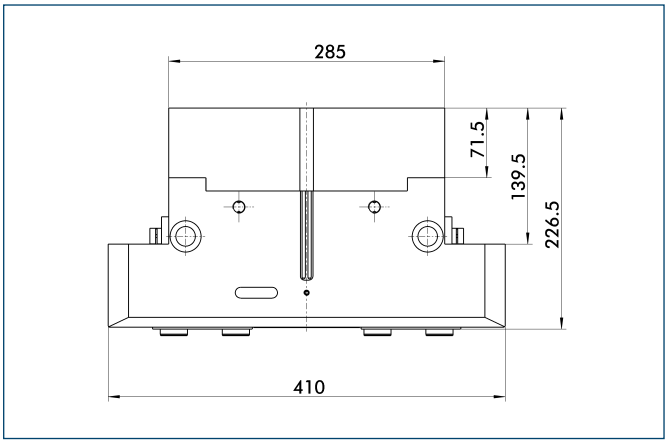


The mechanical gripping force maintenance device ensures a minimum gripping force even in case of pressure drop. This acts as closing force in the AS version, and as opening force in the IS version. In addition, the gripping force maintenance device can also be used for increasing the gripping force or for single-acting gripping.

## Dust-protection version

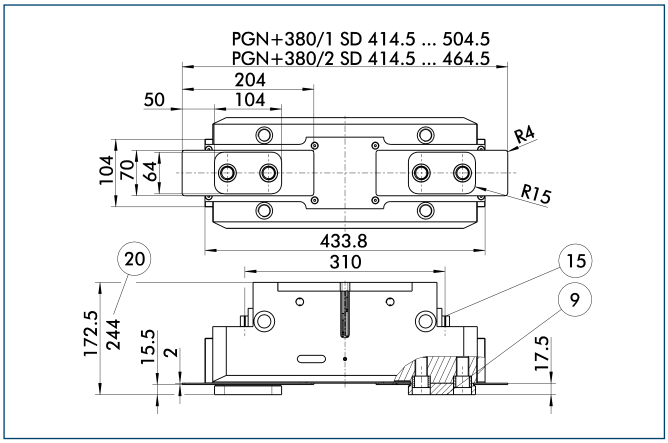


⑨ For mounting screw connection diagram, see basic version
⑳ For AS / IS version
⑮ Sealing bolt

The “dust-protection” option increases the degree of protection against penetrating substances. The screw connection diagram shifts by the height of the intermediate jaw. The finger length is still measured from the upper edge of the gripper housing.

## Precision version

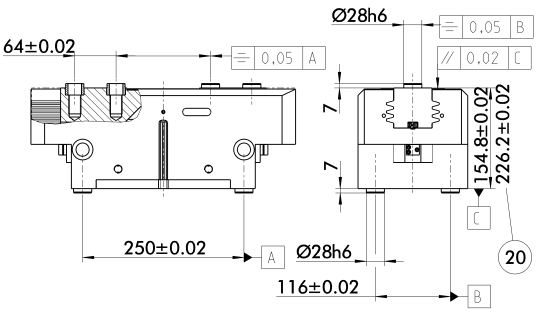


⑳ For AS / IS version

The indicated tolerances just refer to the types of precision versions shown in the chart of technical specifications. All other types of precision versions are available on request.

## Maximum permitted finger projection

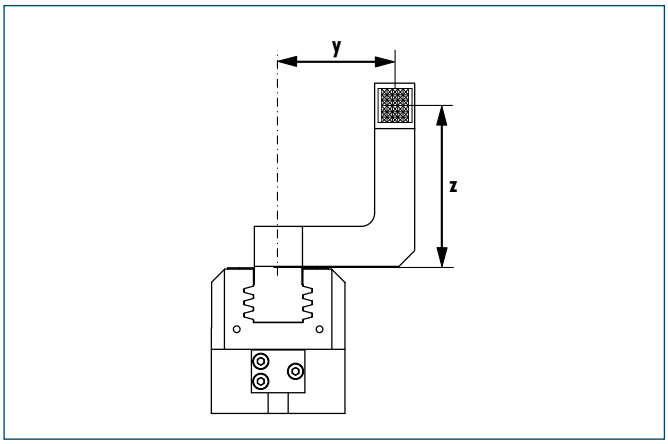


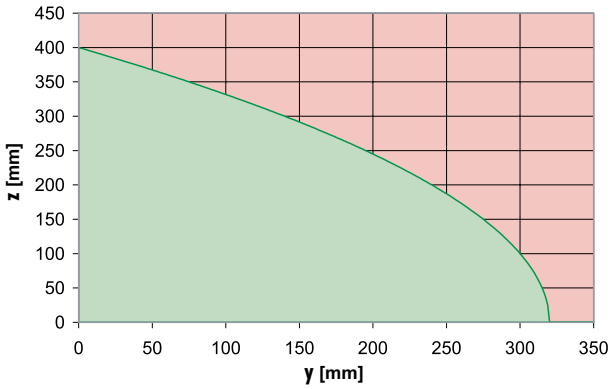


Permitted range
Inadmissible range

The curve applies to the basic version (stroke -1). For other versions, the curve will be parallel but offset in line with the max. permitted finger length.

## Electronic magnetic switches

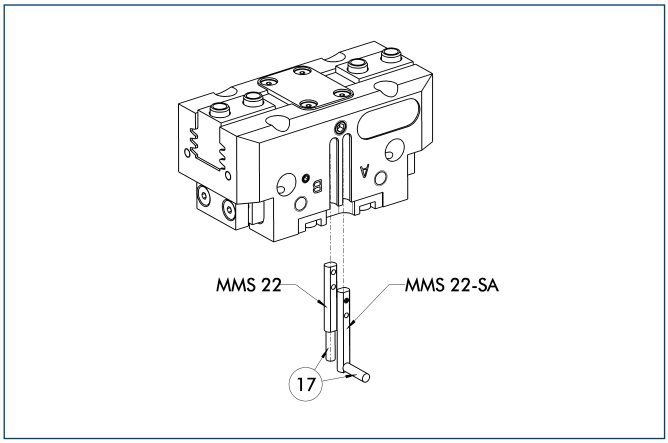


⑰ Cable outlet

End position monitoring for mounting in the C-slot

| Description | ID | Recommended product |
|---|---|---|
| Electronic magnetic switches | | |
| MMS 22-S-M5-PNP | **0301438** | |
| MMS 22-S-M5-NPN | **0301439** | |
| MMS 22-S-M8-PNP | **0301432** | • |
| MMS 22-S-M8-NPN | **0301433** | |
| MMSK 22-S-PNP | **0301434** | |
| MMSK 22-S-NPN | **0301435** | |
| Electronic magnetic switches with lateral cable outlet | | |
| MMS 22-S-M5-PNP-SA | **0301448** | |
| MMS 22-S-M5-NPN-SA | **0301449** | |
| MMS 22-S-M8-PNP-SA | **0301442** | • |
| MMS 22-S-M8-NPN-SA | **0301443** | |
| MMSK 22-S-PNP-SA | **0301444** | |
| MMSK 22-S-NPN-SA | **0301445** | |
| Reed Switches | | |
| RMS 22-S-M8 | **0377720** | • |
| Connection cables | | |
| KA BG05-L 3P-0300 | **0301652** | |
| KA BG08-L 3P-0300-PNP | **0301622** | |
| KA BG08-L 3P-0500-PNP | **0301623** | |
| KA BW05-L 3P-0300 | **0301650** | |
| KA BW08-L 3P-0300-NPN | **0301602** | |
| KA BW08-L 3P-0300-PNP | **0301594** | |
| KA BW08-L 3P-0500-NPN | **9641116** | |
| KA BW08-L 3P-0500-PNP | **0301502** | |
| Cable extensions | | |
| KV BW08-SG08 3P-0030-PNP | **0301495** | |
| KV BW08-SG08 3P-0100-PNP | **0301496** | |
| KV BW08-SG08 3P-0200-PNP | **0301497** | |

ⓘ Two sensors (closer/NO) are required for each gripper, plus extension cables as an option.

ⓘ Please note the minimum permitted bending radii for the sensor cables, which are generally 35 mm.

## Inductive proximity switches

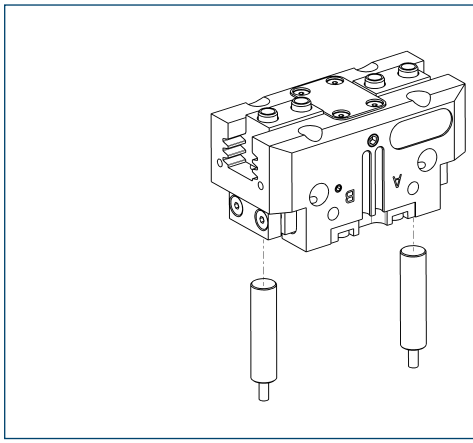

End position monitoring for direct mounting

| Description | ID | Recommended product |
|---|---|---|
| Inductive proximity switches | | |
| IN 80-S-M8 | **0301478** | • |
| IN 80-S-M12 | **0301578** | |
| INK 80-S | **0301550** | |
| Connection cables | | |
| KA BG08-L 3P-0300-PNP | **0301622** | |
| KA BG08-L 3P-0500-PNP | **0301623** | |
| KA BG12-L 3P-0500-PNP | **30016369** | |
| KA BW08-L 3P-0300-PNP | **0301594** | |
| KA BW08-L 3P-0500-PNP | **0301502** | |
| KA BW12-L 3P-0300-PNP | **0301503** | |
| KA BW12-L 3P-0500-PNP | **0301507** | |
| Cable extensions | | |
| KV BG12-SG12 3P-0030-PNP | **0301999** | |
| KV BG12-SG12 3P-0060-PNP | **0301998** | |
| KV BW08-SG08 3P-0030-PNP | **0301495** | |
| KV BW08-SG08 3P-0100-PNP | **0301496** | |
| KV BW08-SG08 3P-0200-PNP | **0301497** | |
| KV BW12-SG12 3P-0030-PNP | **0301595** | |
| KV BW12-SG12 3P-0100-PNP | **0301596** | |
| KV BW12-SG12 3P-0200-PNP | **0301597** | |

ⓘ Two sensors (closer/NO) are required for each gripper, plus extension cables as an option.

ⓘ Please note the minimum permitted bending radii for the sensor cables, which are generally 35 mm.

You can find more detailed information and individual parts of the above-mentioned accessories in the “Accessories” catalog section.

## Cylindrical Reed Switches

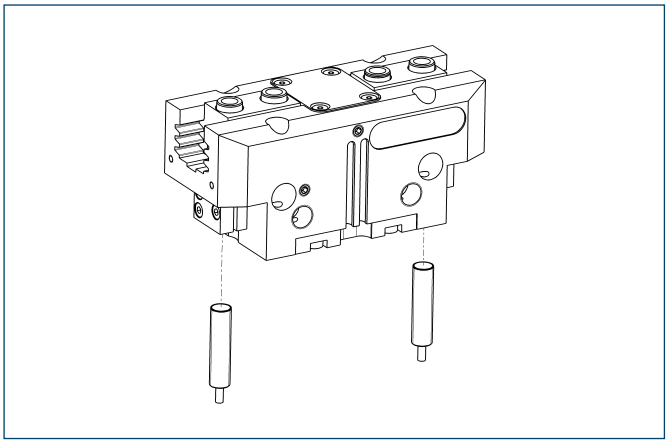

End position monitoring mounted with mounting kit

| Description | ID |
|---|---|
| Mounting kit for proximity switch | |
| AS-RMS 80 PGN/PZN-plus 160-380 | **0377727** |
| Reed Switches | |
| RMS 80-S-M8 | **0377721** |

ⓘ Two sensors (closer/NO) are required for each gripper, plus extension cables as an option.
ⓘ This mounting kit needs to be ordered optionally as an accessory.
ⓘ Please note the minimum permitted bending radii for the sensor cables, which are generally 35 mm.

## Analog position sensor

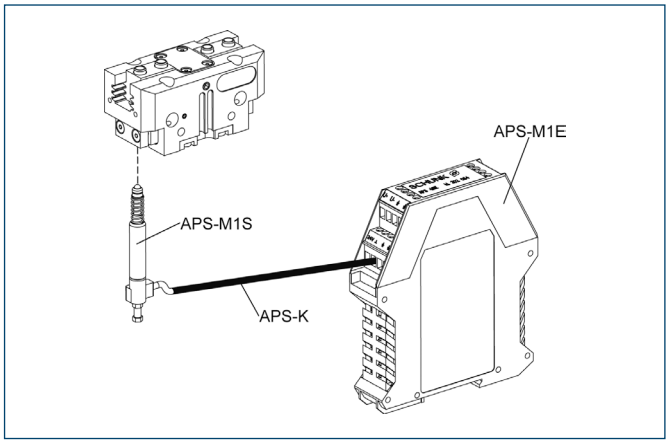


Analog multi position monitoring for any desired positions

| Description | ID |
|---|---|
| Mounting kit | |
| AS-APS-M1-200/1 and 380/2 | **0302085** |
| AS-APS-M1-380/1 | **0302090** |
| Connection cables | |
| APS-K0200 | **0302066** |
| APS-K0700 | **0302068** |
| Electronic Processor | |
| APS-M1E | **0302064** |
| Sensor | |
| APS-M1S | **0302062** |

ⓘ When using an APS system, for each gripper a mounting kit (AS-APS), an APS sensor (APS-M 1S, incl. 3 m cable) as well as an electronics (APS-M1e) are required.
ⓘ An extension cable (APS-K) can be connected between the sensor and the electronics as an option. The max. cable length between the sensor and the electronics is 10 m, between the electronics and their control unit (PLC) it is max. 1 m.


You can find more detailed information and individual parts of the above-mentioned accessories in the “Accessories” catalog section.

## Flexible Position Sensor

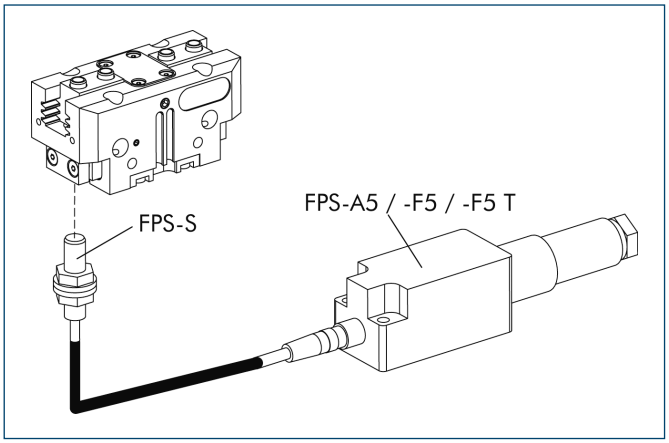


Flexible position monitoring of up to five positions

| Description | ID |
|---|---|
| Mounting kit for FPS | |
| AS-PGN-plus 380-2 | **0301645** |
| Electronic Processor | |
| FPS-F5 | **0301805** |
| FPS-F5 T | **0301807** |
| Sensor | |
| FPS-S M8 | **0301704** |

ⓘ When using a FPS system, a FPS sensor (FPS-S) and a control unit (FPS-F5 / F5 T or A5) are required for each gripper as well as a mounting kit (AS), if listed. Cable extensions (KV) are available as options in the “Accessories” catalog section.

You can find more detailed information and individual parts of the above-mentioned accessories in the “Accessories” catalog section.

**Sizes**
40 ... 160

**Weight**
0.08 kg ... 3.3 kg

**Gripping force**
123 N ... 2210 N

**Stroke per finger**
2.5 mm ... 16 mm

**Workpiece weight**
0.62 kg ... 8.2 kg

## Application example

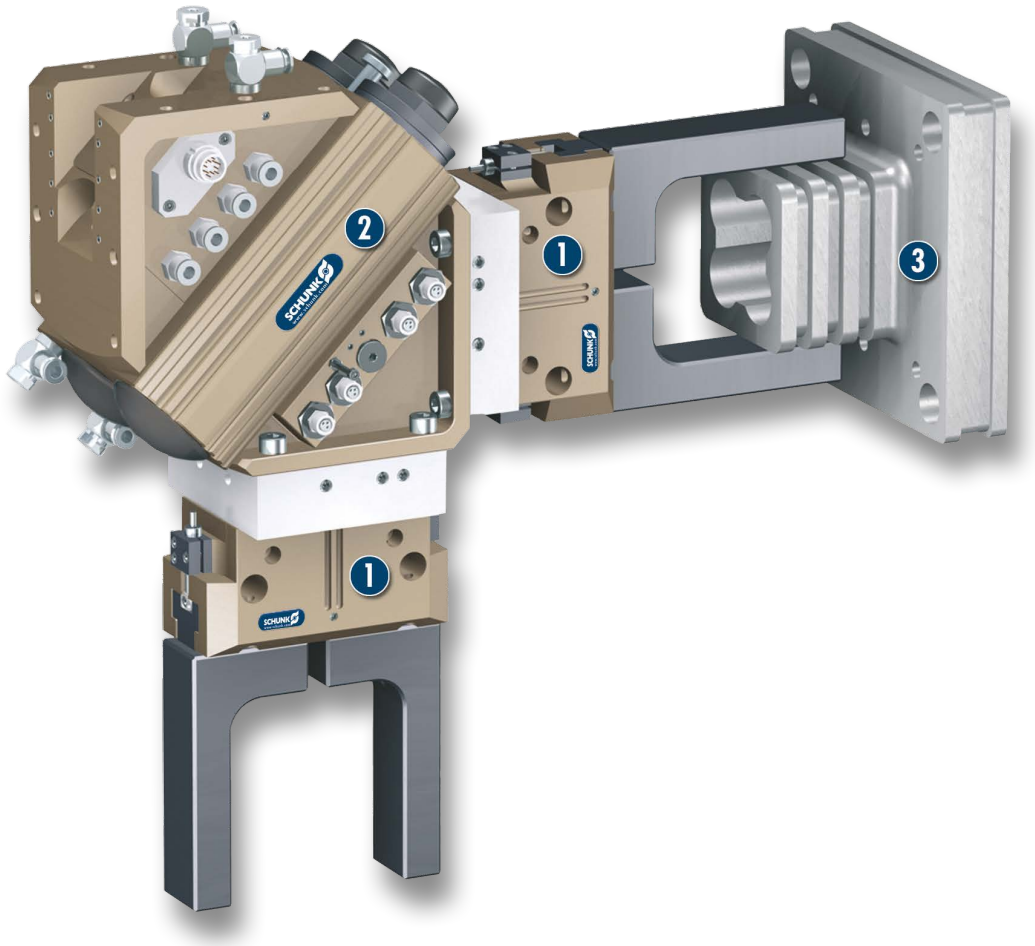


**Supply and assembly devices**

1. 2-Finger Parallel Gripper JGP with workpiece-specific gripper fingers
2. Swivel Head SRH-plus
3. Workpiece

## Universal Gripper

universal 2-Finger Parallel Gripper of the compact class with T-slot guidance and best cost-performance ratio

## Field of application

Optimum standard solution for many fields of application. Universal application in clean and slightly dirty surroundings in machine building and plant building industry, assembly and handling as well as automotive industry.




## Your advantages and benefits

**A firm focus on the essentials**
for maximum profitability

**Sturdy T-slot guidance**
for the precise handling of all kinds of workpieces

**Compact dimensions and low weight**
for minimal interfering contours in handling

**High maximum moments possible**
suitable for using long gripper fingers

**Wedge-hook design**
for high power transmission and synchronized gripping

**Comprehensive sensor accessories**
for interrogation and control of the stroke position

**Mounting from two gripper sides**
for universal and flexible gripper assembly

**Air supply via hose-free direct connection or screw connections**
for the flexible supply of compressed air in all automation systems

## General note to the series

**Principle of function**
Wedge-hook kinematics

**Housing material**
Aluminum alloy, hard-anodized

**Base jaw material**
Steel

**Actuation**
pneumatic, with filtered compressed air (10 microns): dry, lubricated or non-lubricated
Pressure medium: Required quality class of compressed air according to DIN ISO 8573-1: 6 4 4

**Warranty**
24 months (details, general terms and conditions and operation manuals can be downloaded under www.schunk.com)

**Scope of delivery**
Brackets for proximity switches, centering sleeves, O-rings for direct connection, assembly and operating manual with manufacturer's declaration

**Gripping force maintenance device**
with either mechanical gripping force maintenance or SDV-P pressure maintenance valve

## Sectional diagram

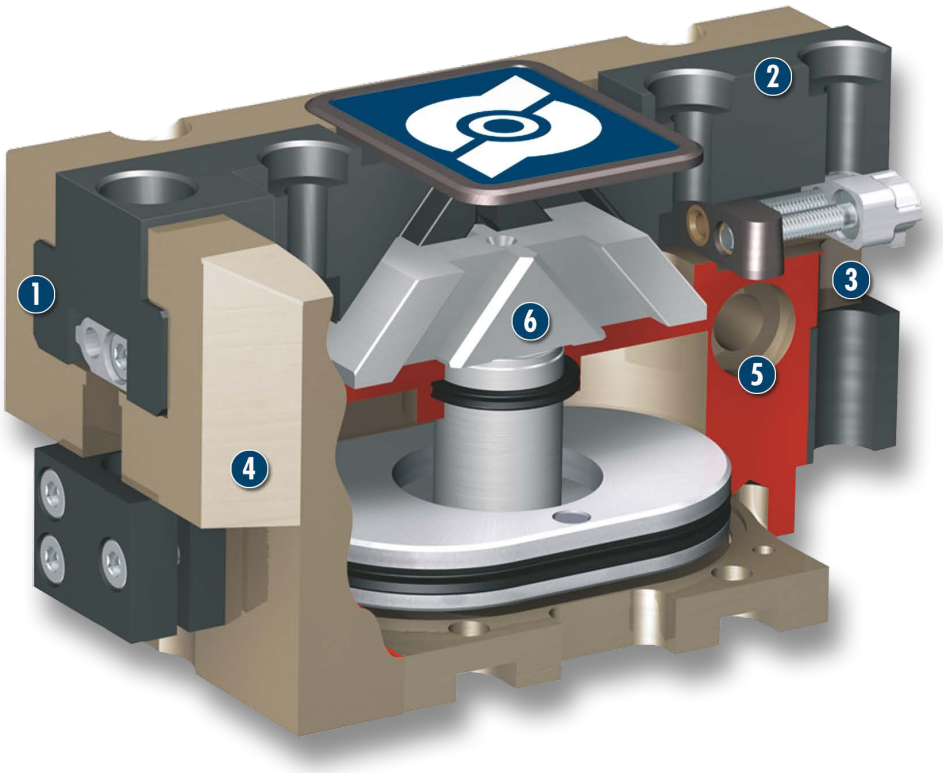


**1 T-slot guidance**
loadable, robust base jaw guidance for extremely long gripper fingers

**2 Base jaw**
for the connection of workpiece-specific gripper fingers

**3 Sensor system**
Proximity switch can be assembled without mounting kit

**4 Housing**
weight-optimized through application of hard-anodized, high-strength aluminum alloy

**5 Centering and mounting possibilities**
for universal assembly of the gripper

**6 Wedge-hook design**
for high power transmission and centric gripping

## Functional description

The oval piston is moved up or down by means of compressed air.
Through its angled active surfaces, the wedge hook transforms this movement into the lateral, synchronous gripping movement of both base jaws.

## Options and special information

The JGP series is especially suitable for economic handling solutions and distinguishes by its high cost-benefit ratio.

## Accessories

Accessories from SCHUNK – the suitable supplement for maximum functionality, reliability and performance of all automation modules.

### Tolerance compensation unit



### Compensation unit



### Magnetic Switches



### Inductive proximity switches



### Universal intermediate jaw






### Switching valve



### Quick-change Jaw System



### Sensor Distributor

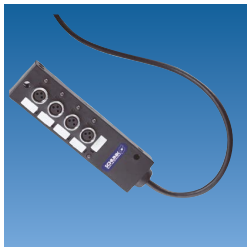

### Pressure maintenance valve



### Finger blanks



### Force measuring jaws



### Analog position sensor

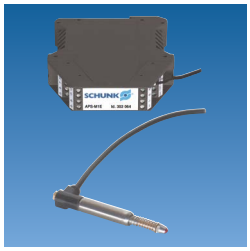

### Flexible Position Sensor

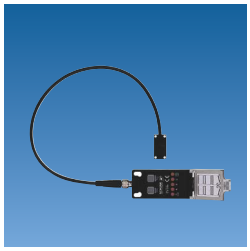

ⓘ For the exact size of the required accessories, availability of this size and the designation and ID, please refer to the additional views at the end of the size in question. You will find more detailed information on our accessory range in the “Accessories” catalog section.

## General note to the series

### Gripping force

is the arithmetic total of the gripping force applied to each finger at distance P (see illustration) measured from the upper edge of the gripper.

### Finger length

The finger length is measured from the upper edge of the gripper housing in the direction of the main axis.

### Repeat accuracy

is defined as the spread of the limit position after 100 consecutive strokes.

### Workpiece weight

The recommended workpiece weight is calculated for a force-type connection with a coefficient of friction of 0.1 and a safety factor of 2 against slippage of the workpiece on acceleration due to gravity g. Considerably heavier workpiece weights are permitted with form-fit gripping.

### Closing and opening times

Closing and opening times are purely the times that the base jaws or fingers are in motion. Valve switching times, hose filling times or PLC reaction times are not included in the above times and must be taken into consideration when determining cycle times.

# JGP 40

**Pneumatic • 2-Finger Parallel Gripper • Universal Gripper**




## Gripping force, I.D. gripping

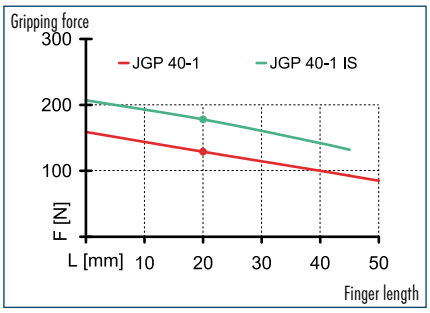


## Gripping force, O.D. gripping

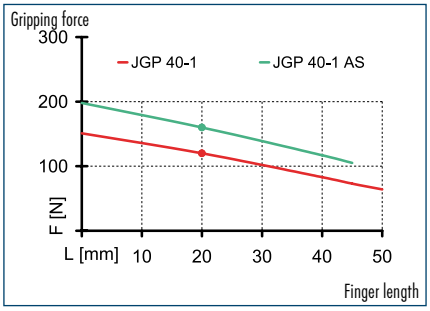


## Finger load

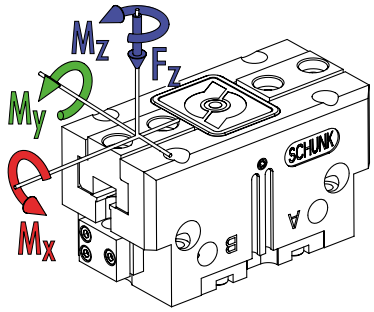


- $M_x$ max. 8.00 Nm
- $M_y$ max. 10.00 Nm
- $M_z$ max. 4.00 Nm
- $F_z$ max. 200.0 N

ⓘ The indicated moments and forces are static values, apply per base jaw and may occur simultaneously. $M_y$ may arise in addition to the moment generated by the gripping force itself. If the max. permitted finger weight is exceeded, it is imperative to throttle the air pressure so that the jaw movement occurs without any hitting or bouncing. Service life may be reduced.

## Technical data

| Description | | JGP 40 | JGP 40-1-AS | JGP 40-1-IS |
|---|---|---|---|---|
| **ID** | | **0308600** | **0308601** | **0308602** |
| Stroke per finger | [mm] | 2.5 | 2.5 | 2.5 |
| Closing force | [N] | 123 | 163 | |
| Opening force | [N] | 132 | | 182 |
| Min. spring force | [N] | | 40 | 50 |
| Weight | [kg] | 0.08 | 0.09 | 0.09 |
| Recommended workpiece weight | [kg] | 0.62 | 0.62 | 0.62 |
| Air consumption per double stroke | [cm³] | 2.5 | 5.5 | 5.5 |
| Min./max. operating pressure | [bar] | 2.5/8 | 4/6.5 | 4/6.5 |
| Nominal operating pressure | [bar] | 6 | 6 | 6 |
| Closing/opening time | [s] | 0.02/0.02 | 0.02/0.03 | 0.03/0.02 |
| Max. permitted finger length | [mm] | 50 | 45 | 45 |
| Max. permitted weight per finger | [kg] | 0.1 | 0.1 | 0.1 |
| IP class | | 40 | 40 | 40 |
| Min./max. ambient temperature | [°C] | -10/90 | -10/90 | -10/90 |
| Repeat accuracy | [mm] | 0.01 | 0.01 | 0.01 |

## Main view

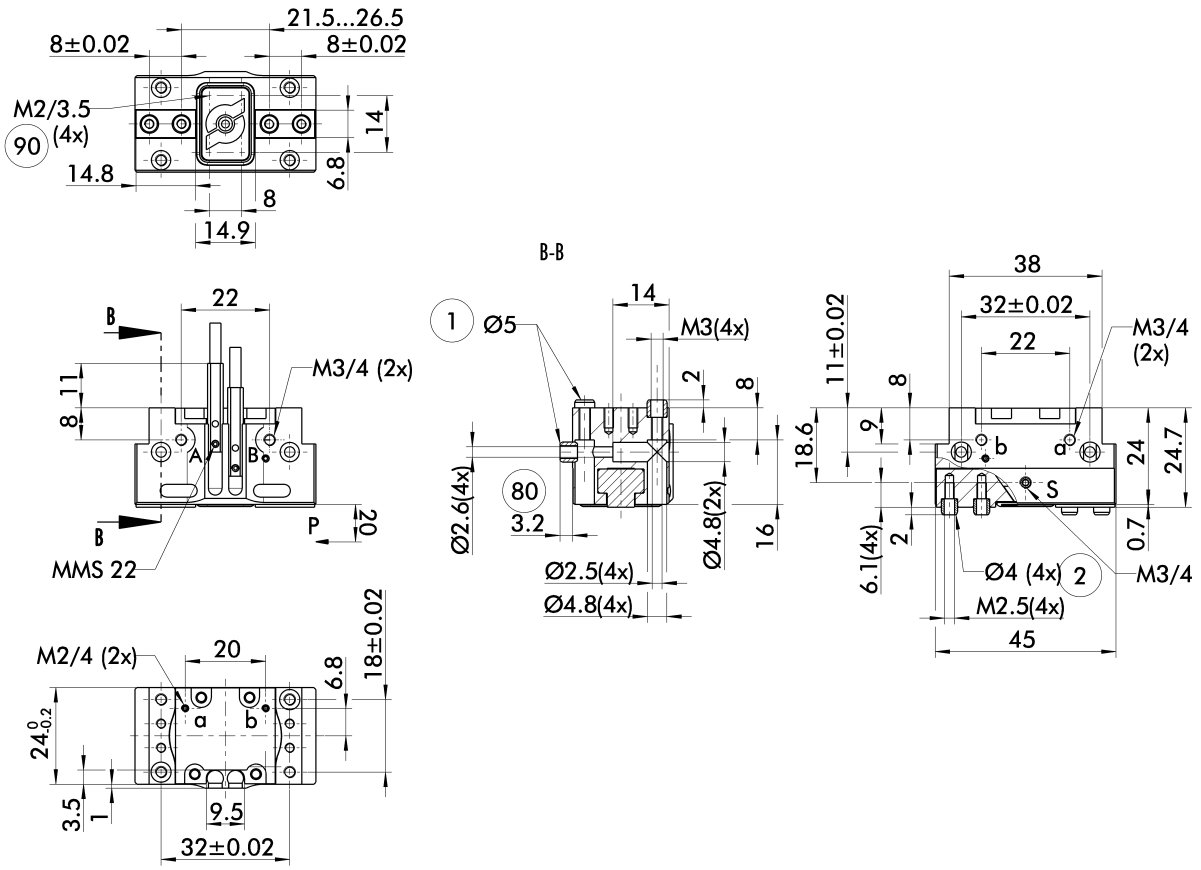


The drawing shows the gripper in the basic version with closed jaws, the dimensions do not include the options described below.

ⓘ The SDV-P pressure maintenance valve can also be used for I.D. or O.D. gripping alternatively or in addition to the spring-loaded, mechanical gripping force maintenance device (see "Accessories" catalog section).

A, a Main/direct connection, gripper opening
B, b Main/direct connection, gripper closing
① Gripper connection
② Finger connection
⑧⓪ Depth of the centering sleeve hole in the matching part
⑨⓪ Thread below the cover for fastening external attachments

## Hose-free direct connection

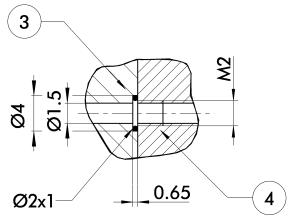


③ Adapter
④ Gripper

The direct connection is used for supplying compressed air without hoses. Instead, the pressure medium is fed through bore-holes in the mounting plate.

## AS/IS gripping force maintenance device

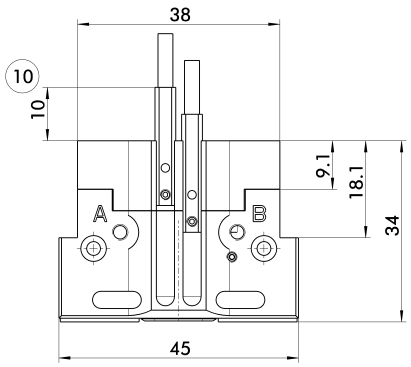


⑩ Projection applies only for AS version

The mechanical gripping force maintenance device ensures a minimum gripping force even in case of pressure drop. This acts as closing force in the AS version, and as opening force in the IS version. In addition, the gripping force maintenance device can also be used for increasing the gripping force or for single-acting gripping.

## Modular Assembly Automation

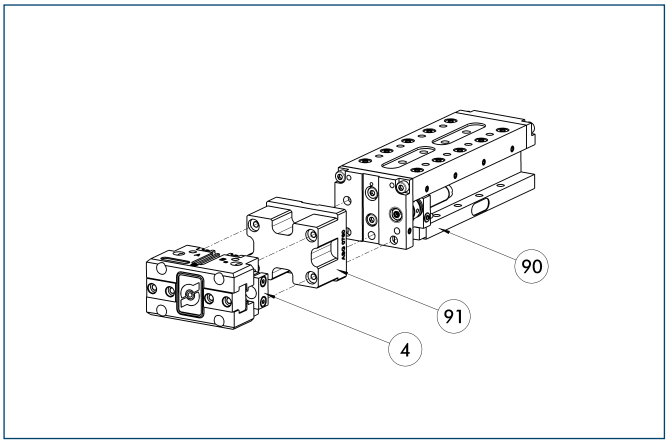


④ Gripper
⑨① ASG
⑨⓪ CLM

This gripper can be combined with the standard linear modules LM, KLM, CLM and ELM of the GEMOTEC modular system. For more information see our main catalog "Modular Assembly Automation".

## Maximum permitted finger projection

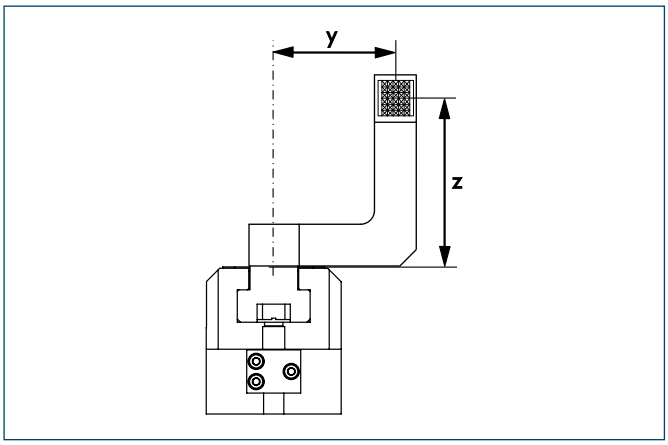


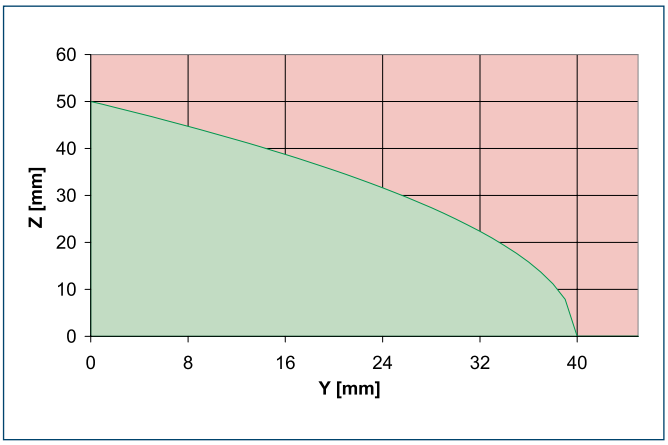


Permitted range
Inadmissible range

The curve applies to the basic version (stroke -1). For other versions, the curve will be parallel but offset in line with the max. permitted finger length.

## Universal intermediate jaw

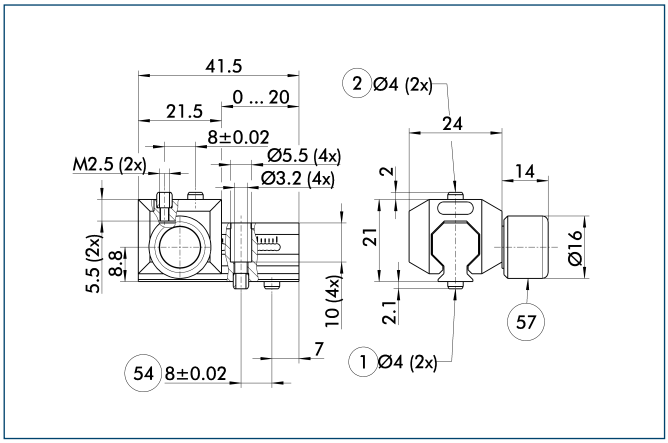


① Gripper connection
② Finger connection
54 Optional right or left connection
57 Locking

The universal intermediate jaw allows fast tool-free and reliable plugging and shifting of top jaws at the gripper.

| Description | ID | Grid dimension |
|---|---|---|
| Universal intermediate jaw | | |
| UZB 40 | **0300040** | 1 mm |

ⓘ The slide UZB-S can be removed completely and has to be ordered separately. Moreover, it allows a fast jaw change.

## Finger blanks

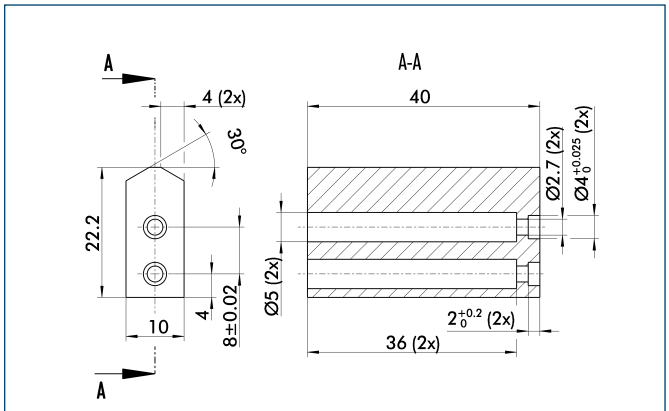


Finger blanks for customized subsequent machining

| Description | ID | Material | Scope of delivery |
|---|---|---|---|
| Finger blanks | | | |
| ABR-plus 40 | **0300008** | Aluminum | 1 |
| SBR-plus 40 | **0300018** | 16 MnCr 5 | 1 |

## Compensation unit with spring reset

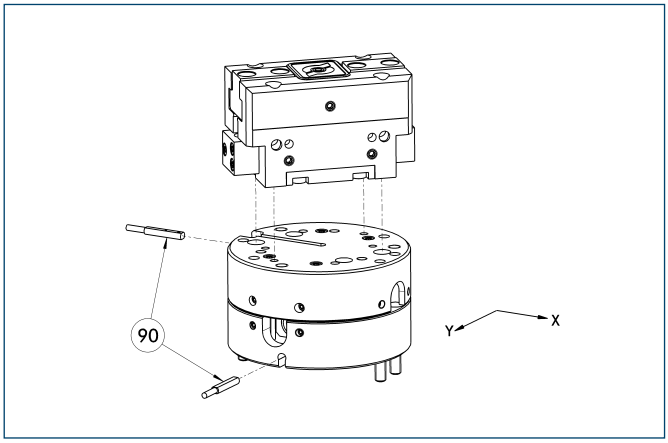


90 Monitoring

Grippers can be directly mounted without using an adapter plate. For details see our catalog “Robot Accessories”.

| Description | ID | Compensation travel | Reset force |
|---|---|---|---|
| Compensation unit | | | |
| AGE-F-XY-031-1 | **0324900** | ±1.5 mm | 1 N |
| AGE-F-XY-031-2 | **0324901** | ±1.5 mm | 2.5 N |
| AGE-F-XY-031-3 | **0324902** | ±1.5 mm | 3.3 kN |

## Attachment valves

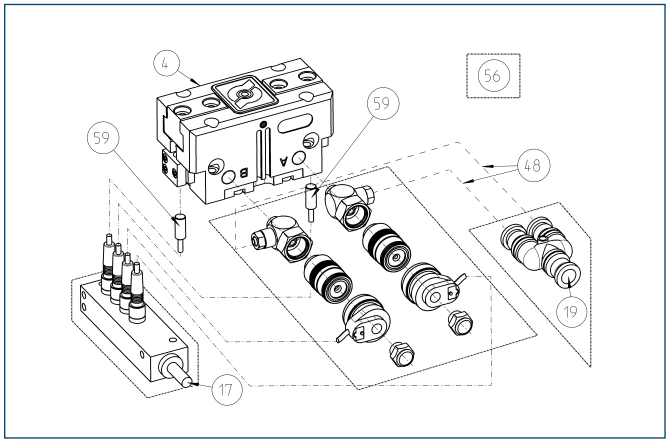


④ Gripper
⑰ Cable outlet
⑲ Air connection
48 Hose
56 Included in delivery
59 Monitoring “gripping”

For each gripper one attachment valve ABV is required, optional with distributor for sensors and valves. Attachment valves increase the efficiency, reduce the installation work and air consumption and simplify air supply. For details please refer to the “Accessories” catalog section.

| Description | ID |
|---|---|
| Attachment valves | |
| ABV-MV15-M3 | **0303322** |
| ABV-MV15-M3-V2-M8 | **0303384** |
| ABV-MV15-M3-V4-M8 | **0303354** |
| ABV-MV15-M3-V8-M8 | **0303355** |

You can find more detailed information and individual parts of the above-mentioned accessories in the “Accessories” catalog section.

## Programmable magnetic switch

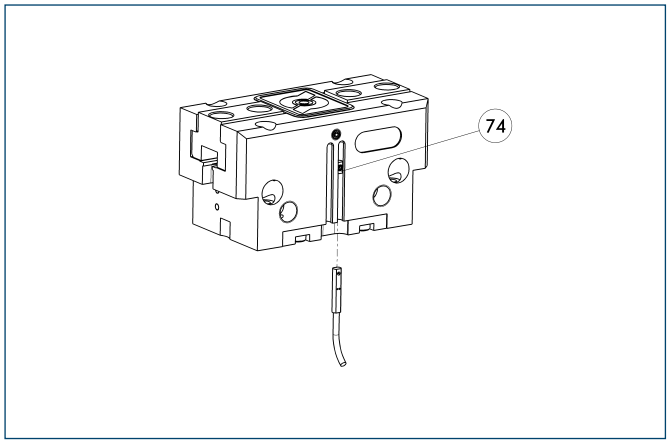


74 Stop for MMS-P

Position monitoring with two programmable positions per sensor. The end position monitoring is mounted in the C-slot.

| Description | ID | Recommended product |
|---|---|---|
| Programmable magnetic switch | | |
| MMS-P 22-S-M8-PNP | **0301370** | • |
| MMSK-P 22-S-PNP | **0301371** | |
| Connection cables | | |
| KA BG08-L 4P-0500 | **0307767** | |
| KA BG08-L 4P-1000 | **0307768** | |
| KA BW08-L 4P-0500 | **0307765** | |
| KA BW08-L 4P-1000 | **0307766** | |
| Sensor Distributor | | |
| V2-M8-4P-2XM8-3P | **0301380** | |

ⓘ Please note the minimum permitted bending radii for the sensor cables, which are generally 35 mm.

ⓘ Per gripper one sensor (closer/NO) is required, optionally a cable extension.

## Electronic magnetic switches

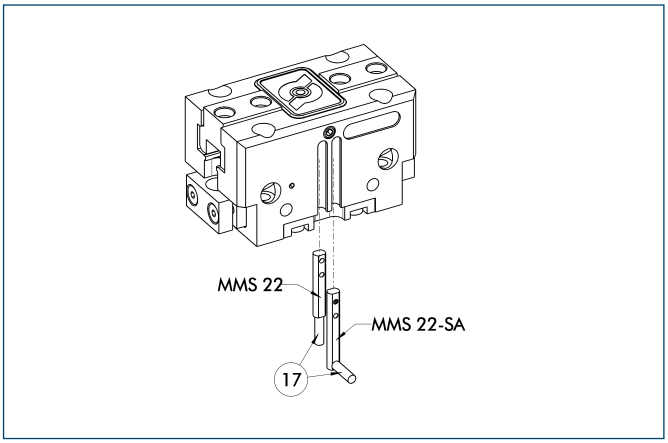


17 Cable outlet

End position monitoring for mounting in the C-slot

| Description | ID | Recommended product |
|---|---|---|
| Electronic magnetic switches | | |
| MMS 22-S-M5-PNP | **0301438** | |
| MMS 22-S-M5-NPN | **0301439** | |
| MMS 22-S-M8-PNP | **0301432** | • |
| MMS 22-S-M8-NPN | **0301433** | |
| MMSK 22-S-PNP | **0301434** | |
| MMSK 22-S-NPN | **0301435** | |
| Electronic magnetic switches with lateral cable outlet | | |
| MMS 22-S-M5-PNP-SA | **0301448** | |
| MMS 22-S-M5-NPN-SA | **0301449** | |
| MMS 22-S-M8-PNP-SA | **0301442** | • |
| MMS 22-S-M8-NPN-SA | **0301443** | |
| MMSK 22-S-PNP-SA | **0301444** | |
| MMSK 22-S-NPN-SA | **0301445** | |
| Connection cables | | |
| KA BG05-L 3P-0300 | **0301652** | |
| KA BG08-L 3P-0300-PNP | **0301622** | |
| KA BG08-L 3P-0500-PNP | **0301623** | |
| KA BW05-L 3P-0300 | **0301650** | |
| KA BW08-L 3P-0300-NPN | **0301602** | |
| KA BW08-L 3P-0300-PNP | **0301594** | |
| KA BW08-L 3P-0500-NPN | **9641116** | |
| KA BW08-L 3P-0500-PNP | **0301502** | |
| Cable extensions | | |
| KV BW08-SG08 3P-0030-PNP | **0301495** | |
| KV BW08-SG08 3P-0100-PNP | **0301496** | |
| KV BW08-SG08 3P-0200-PNP | **0301497** | |

ⓘ Two sensors (closer/NO) are required for each gripper, plus extension cables as an option.

ⓘ Please note the minimum permitted bending radii for the sensor cables, which are generally 35 mm.

You can find more detailed information and individual parts of the above-mentioned accessories in the “Accessories” catalog section.

# JGP 50





## Gripping force, I.D. gripping

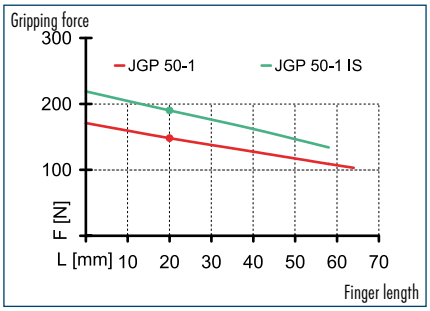


## Gripping force, O.D. gripping

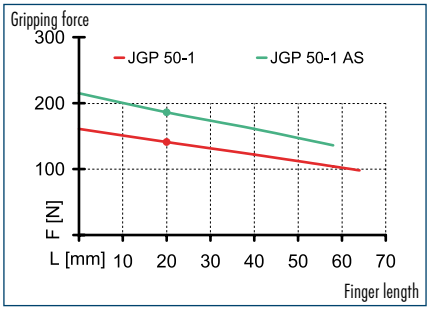


## Finger load

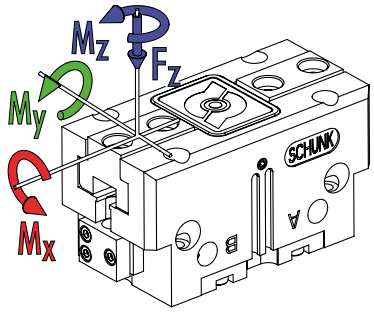


- $M_x$ max. 16.00 Nm
- $M_y$ max. 20.00 Nm
- $M_z$ max. 8.00 Nm
- $F_z$ max. 400.0 N

ⓘ The indicated moments and forces are static values, apply per base jaw and may occur simultaneously. $M_y$ may arise in addition to the moment generated by the gripping force itself. If the max. permitted finger weight is exceeded, it is imperative to throttle the air pressure so that the jaw movement occurs without any hitting or bouncing. Service life may be reduced.

## Technical data

| Description | | JGP 50-1 | JGP 50-1-AS | JGP 50-1-IS |
|---|---|---|---|---|
| ID | | 0308610 | 0308611 | 0308612 |
| Stroke per finger | [mm] | 4 | 4 | 4 |
| Closing force | [N] | 140 | 185 | |
| Opening force | [N] | 145 | | 190 |
| Min. spring force | [N] | | 45 | 45 |
| Weight | [kg] | 0.15 | 0.2 | 0.2 |
| Recommended workpiece weight | [kg] | 0.7 | 0.7 | 0.7 |
| Air consumption per double stroke | [cm³] | 5 | 12 | 12 |
| Min./max. operating pressure | [bar] | 2.5/8 | 4/6.5 | 4/6.5 |
| Nominal operating pressure | [bar] | 6 | 6 | 6 |
| Closing/opening time | [s] | 0.02/0.02 | 0.02/0.03 | 0.02/0.03 |
| Max. permitted finger length | [mm] | 64 | 58 | 58 |
| Max. permitted weight per finger | [kg] | 0.18 | 0.18 | 0.18 |
| IP class | | 40 | 40 | 40 |
| Min./max. ambient temperature | [°C] | -10/90 | -10/90 | -10/90 |
| Repeat accuracy | [mm] | 0.01 | 0.01 | 0.01 |

## Main view

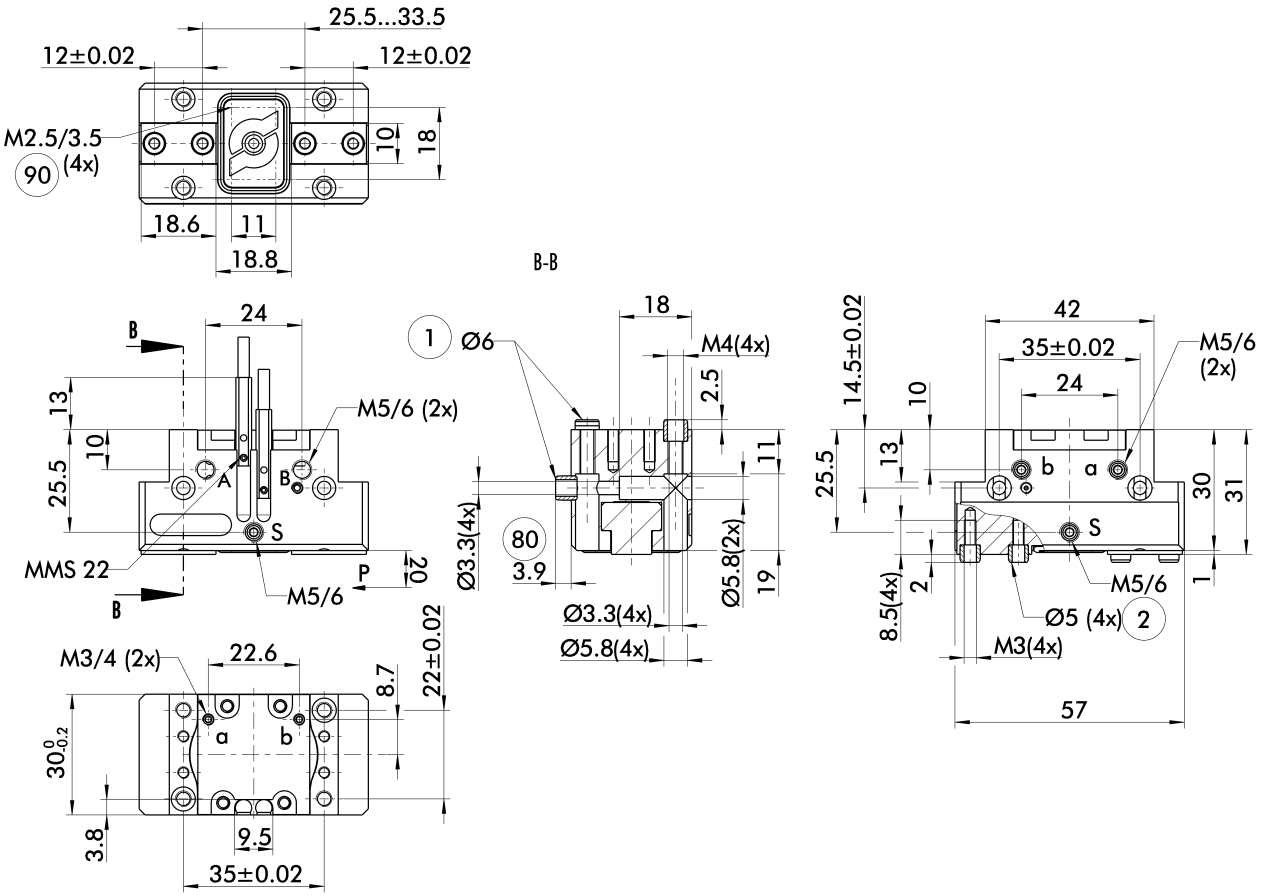


The drawing shows the gripper in the basic version with closed jaws, the dimensions do not include the options described below.

ⓘ The SDV-P pressure maintenance valve can also be used for I.D. or O.D. gripping alternatively or in addition to the spring-loaded, mechanical gripping force maintenance device (see "Accessories" catalog section).

A, a Main/direct connection, gripper opening
B, b Main/direct connection, gripper closing
① Gripper connection
② Finger connection
80 Depth of the centering sleeve hole in the matching part
90 Thread below the cover for fastening external attachments

## Hose-free direct connection

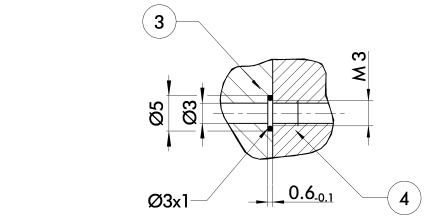


③ Adapter
④ Gripper

The direct connection is used for supplying compressed air without hoses. Instead, the pressure medium is fed through bore-holes in the mounting plate.

## AS/IS gripping force maintenance device

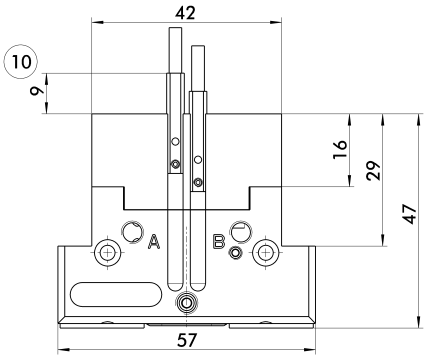


⑩ Projection applies only for AS version

The mechanical gripping force maintenance device ensures a minimum gripping force even in case of pressure drop. This acts as closing force in the AS version, and as opening force in the IS version. In addition, the gripping force maintenance device can also be used for increasing the gripping force or for single-acting gripping.

## Modular Assembly Automation

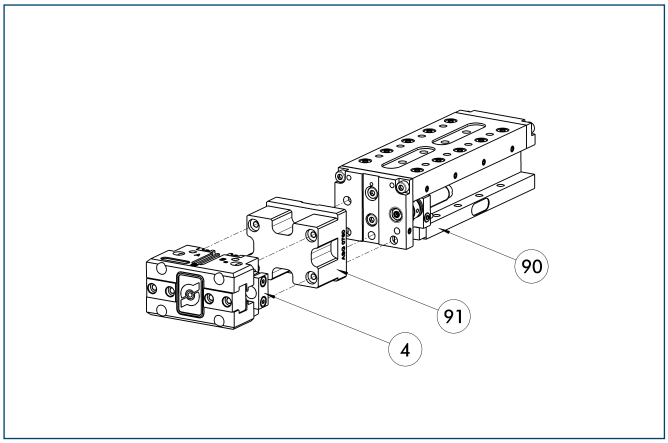


④ Gripper
⑨⓪ CLM
⑨① ASG

This gripper can be combined with the standard linear modules LM, KLM, CLM and ELM of the GEMOTEC modular system. For more information see our main catalog "Modular Assembly Automation".

## Maximum permitted finger projection

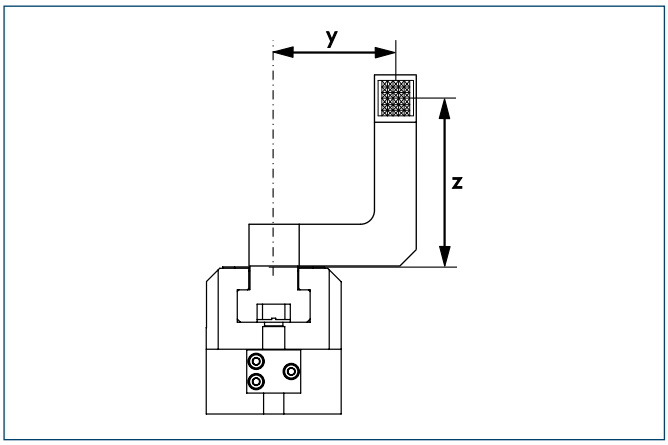


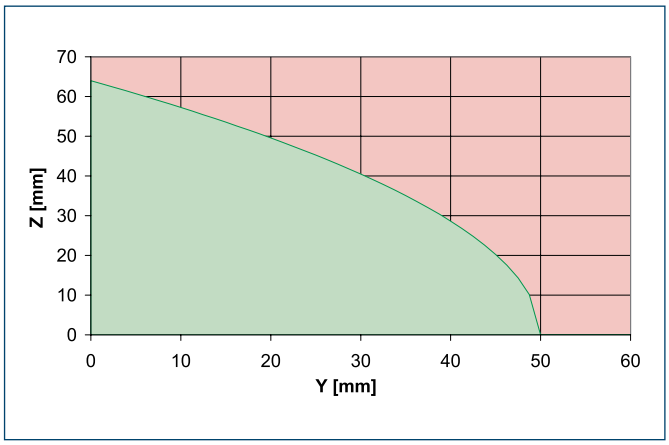


Permitted range
Inadmissible range

The curve applies to the basic version (stroke -1). For other versions, the curve will be parallel but offset in line with the max. permitted finger length.

## Quick-change Jaw System

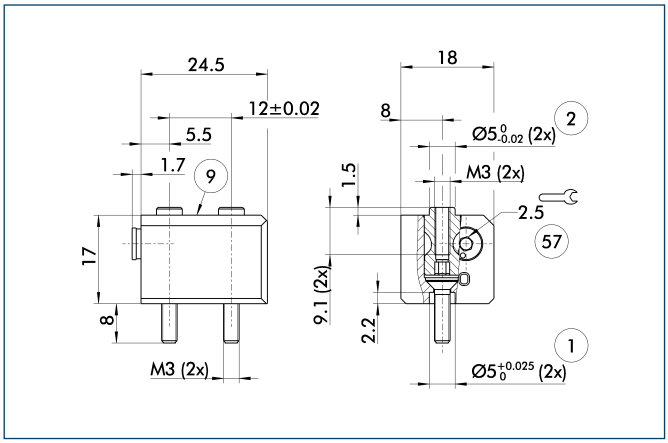


① Gripper connection
② Finger connection
⑨ For mounting screw connection diagram, see basic version
⑤⑦ Locking

The BSWS quick-change jaw system enables top jaws to be changed on the gripper manually and rapidly. An adapter (BSWS-A) and a base (BSWS-B) are required for each gripper jaw.
For a reverse assembly without height set-up, one adapter (BSWS-A) and a kit (BSWS-U) per gripper jaw are required. Another effect of the BSWS-U is, that there are no disturbing fastening bores in the finger contour.

| Description | ID |
|---|---|
| Quick-change Jaw System adapter | |
| BSWS-A 50 | **0303020** |
| Quick-change Jaw System base | |
| BSWS-B 50 | **0303021** |
| Quick-change Jaw System reversed | |
| BSWS-U 50 | **0303040** |

## Universal intermediate jaw

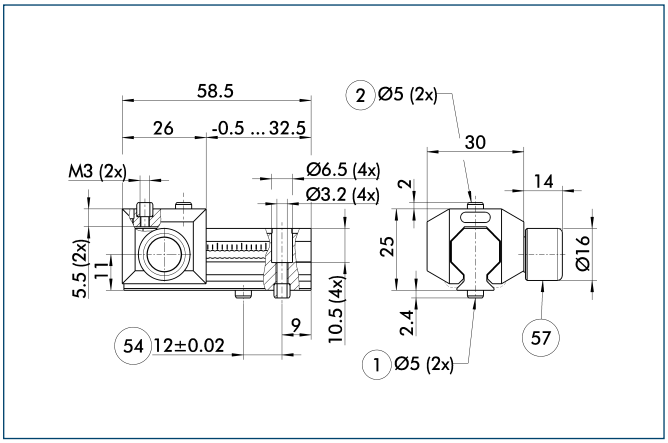


① Gripper connection
② Finger connection
⑤④ Optional right or left connection
⑤⑦ Locking

The universal intermediate jaw allows fast tool-free and reliable plugging and shifting of top jaws at the gripper.

| Description | ID | Grid dimension |
|---|---|---|
| Universal intermediate jaw | | |
| UZB 50 | **0300041** | 1.5 mm |

ⓘ The slide UZB-S can be removed completely and has to be ordered separately. Moreover, it allows a fast jaw change.

You can find more detailed information and individual parts of the above-mentioned accessories in the “Accessories” catalog section.

## Force measuring jaws

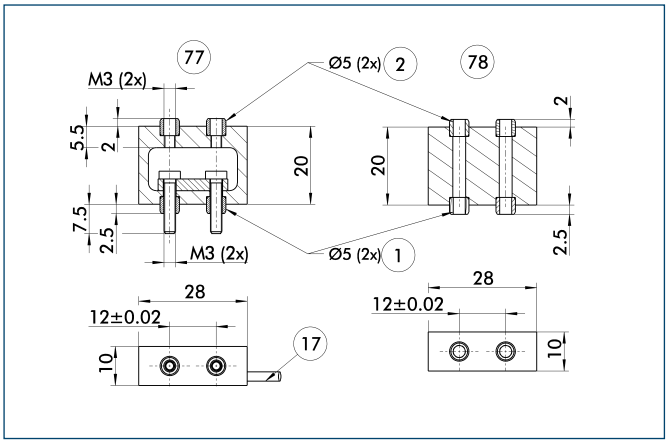


① Gripper connection
② Finger connection
⑰ Cable outlet
⑦⑦ Active intermediate jaws
⑦⑧ Passive intermediate jaws

Force measuring jaws measure gripping forces, but can also determine workpiece weights or dimensional deviations. There are active and passive intermediate jaws (FMS-ZBA or FMS-ZBP). At least one active force measuring jaw is required per gripper, the rest can be passive. For each active jaw, a FMS-A1 control unit and a FMS-A connection cable are required.

| Description | ID |
|---|---|
| Active intermediate jaws | |
| FMS-ZBA 50 | **0301830** |
| Passive intermediate jaws | |
| FMS-ZBP 50 | **0301831** |
| Electronic Processor | |
| FMS-A1 | **0301810** |
| Connection cables | |
| FMS-AK0200 | **0301820** |
| FMS-AK0500 | **0301821** |
| FMS-AK1000 | **0301822** |
| FMS-AK2000 | **0301823** |

## Finger blanks

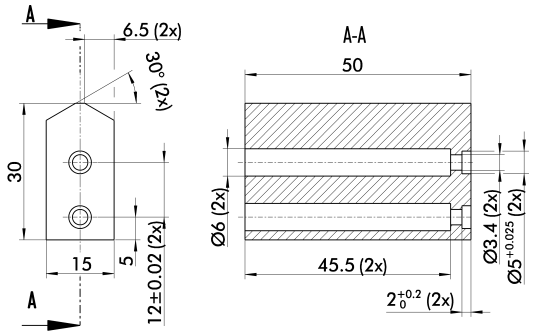


Finger blanks for customized subsequent machining

| Description | ID | Material | Scope of delivery |
|---|---|---|---|
| Finger blanks | | | |
| ABR-plus 50 | **0300009** | Aluminum | 1 |
| SBR-plus 50 | **0300019** | 16 MnCr 5 | 1 |

You can find more detailed information and individual parts of the above-mentioned accessories in the “Accessories” catalog section.

## Tolerance compensation unit

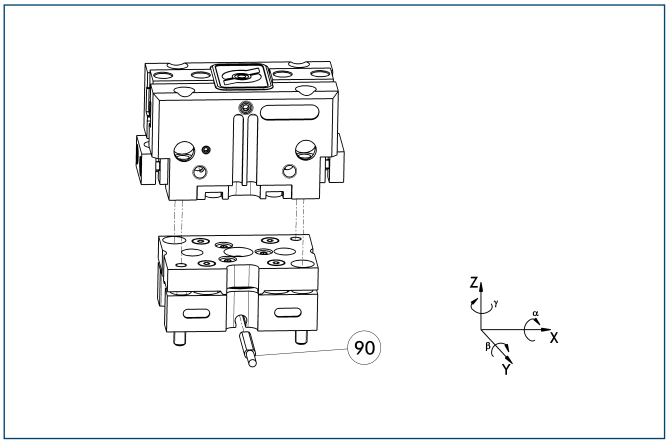


(90) Monitoring of locking

Grippers can be directly mounted without an adapter plate. Tolerance compensation unit and gripper have an identical screw connection diagram. Therefore the tolerance compensation units can be assembled later. Please consider the additional assembly height of the tolerance compensation unit. For details see catalog “Robot Accessories”.

| Description | ID | Locking | Deflection |
|---|---|---|---|
| Compensation unit | | | |
| TCU-050-3-OV-P | **0324757** | No | ±0°/±1°/±0° |

## Compensation unit with spring reset

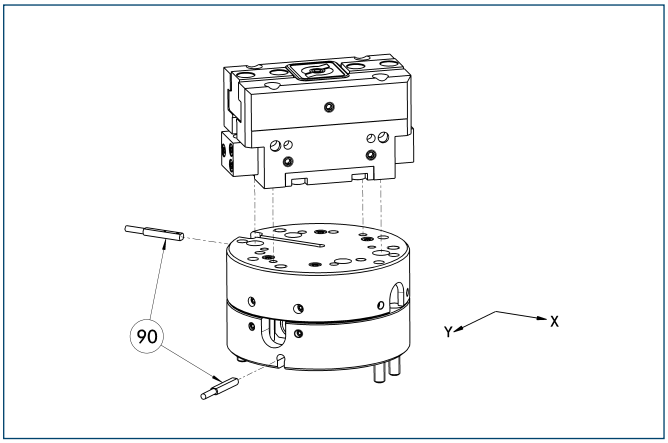


(90) Monitoring

Grippers can be directly mounted without using an adapter plate. For details see our catalog “Robot Accessories”.

| Description | ID | Compensation travel | Reset force |
|---|---|---|---|
| Compensation unit | | | |
| AGE-F-XY-040-1 | **0324920** | ±2 mm | 1 N |
| AGE-F-XY-040-2 | **0324921** | ±2 mm | 2.5 N |
| AGE-F-XY-040-3 | **0324922** | ±2 mm | 3.3 N |

## Attachment valves

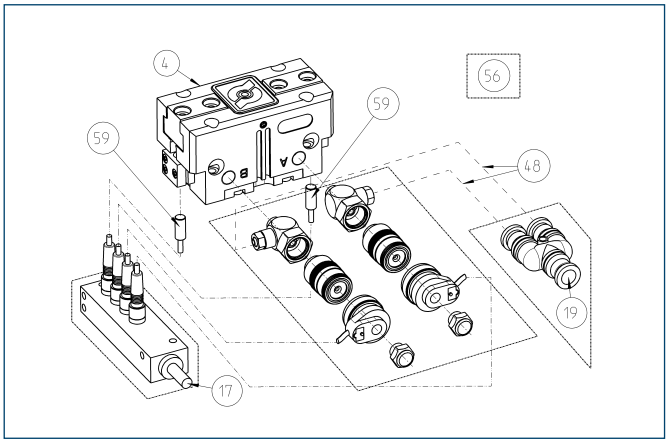


(4) Gripper
(17) Cable outlet
(19) Air connection
(48) Hose
(56) Included in delivery
(59) Monitoring “gripping”

For each gripper one attachment valve ABV is required, optional with distributor for sensors and valves. Attachment valves increase the efficiency, reduce the installation work and air consumption and simplify air supply. For details please refer to the “Accessories” catalog section.

| Description | ID |
|---|---|
| Attachment valves | |
| ABV-MV15-M5 | **0303323** |
| ABV-MV15-M5-V2-M8 | **0303386** |
| ABV-MV15-M5-V4-M8 | **0303356** |
| ABV-MV15-M5-V8-M8 | **0303357** |

## Programmable magnetic switch

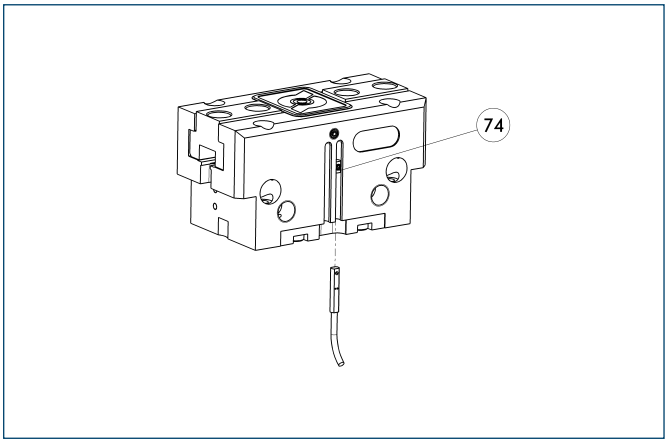


(74) Stop for MMS-P

Position monitoring with two programmable positions per sensor. The end position monitoring is mounted in the C-slot.

| Description | ID | Recommended product |
|---|---|---|
| Programmable magnetic switch | | |
| MMS-P 22-S-M8-PNP | **0301370** | • |
| MMSK-P 22-S-PNP | **0301371** | |
| Connection cables | | |
| KA BG08-L 4P-0500 | **0307767** | |
| KA BG08-L 4P-1000 | **0307768** | |
| KA BW08-L 4P-0500 | **0307765** | |
| KA BW08-L 4P-1000 | **0307766** | |
| Sensor Distributor | | |
| V2-M8-4P-2XM8-3P | **0301380** | |

ⓘ Please note the minimum permitted bending radii for the sensor cables, which are generally 35 mm.
ⓘ Per gripper one sensor (closer/NO) is required, optionally a cable extension.

You can find more detailed information and individual parts of the above-mentioned accessories in the “Accessories” catalog section.

## Electronic magnetic switches

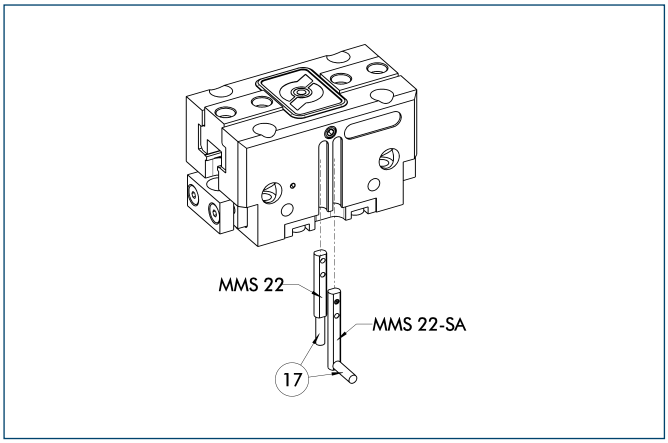


⑰ Cable outlet

End position monitoring for mounting in the C-slot

| Description | ID | Recommended product |
|---|---|---|
| Electronic magnetic switches | | |
| MMS 22-S-M5-PNP | 0301438 | |
| MMS 22-S-M5-NPN | 0301439 | |
| MMS 22-S-M8-PNP | 0301432 | • |
| MMS 22-S-M8-NPN | 0301433 | |
| MMSK 22-S-PNP | 0301434 | |
| MMSK 22-S-NPN | 0301435 | |
| Electronic magnetic switches with lateral cable outlet | | |
| MMS 22-S-M5-PNP-SA | 0301448 | |
| MMS 22-S-M5-NPN-SA | 0301449 | |
| MMS 22-S-M8-PNP-SA | 0301442 | • |
| MMS 22-S-M8-NPN-SA | 0301443 | |
| MMSK 22-S-PNP-SA | 0301444 | |
| MMSK 22-S-NPN-SA | 0301445 | |
| Connection cables | | |
| KA BG05-L 3P-0300 | 0301652 | |
| KA BG08-L 3P-0300-PNP | 0301622 | |
| KA BG08-L 3P-0500-PNP | 0301623 | |
| KA BW05-L 3P-0300 | 0301650 | |
| KA BW08-L 3P-0300-NPN | 0301602 | |
| KA BW08-L 3P-0300-PNP | 0301594 | |
| KA BW08-L 3P-0500-NPN | 9641116 | |
| KA BW08-L 3P-0500-PNP | 0301502 | |
| Cable extensions | | |
| KV BW08-SG08 3P-0030-PNP | 0301495 | |
| KV BW08-SG08 3P-0100-PNP | 0301496 | |
| KV BW08-SG08 3P-0200-PNP | 0301497 | |

ⓘ Two sensors (closer/NO) are required for each gripper, plus extension cables as an option.

ⓘ Please note the minimum permitted bending radii for the sensor cables, which are generally 35 mm.

You can find more detailed information and individual parts of the above-mentioned accessories in the “Accessories” catalog section.

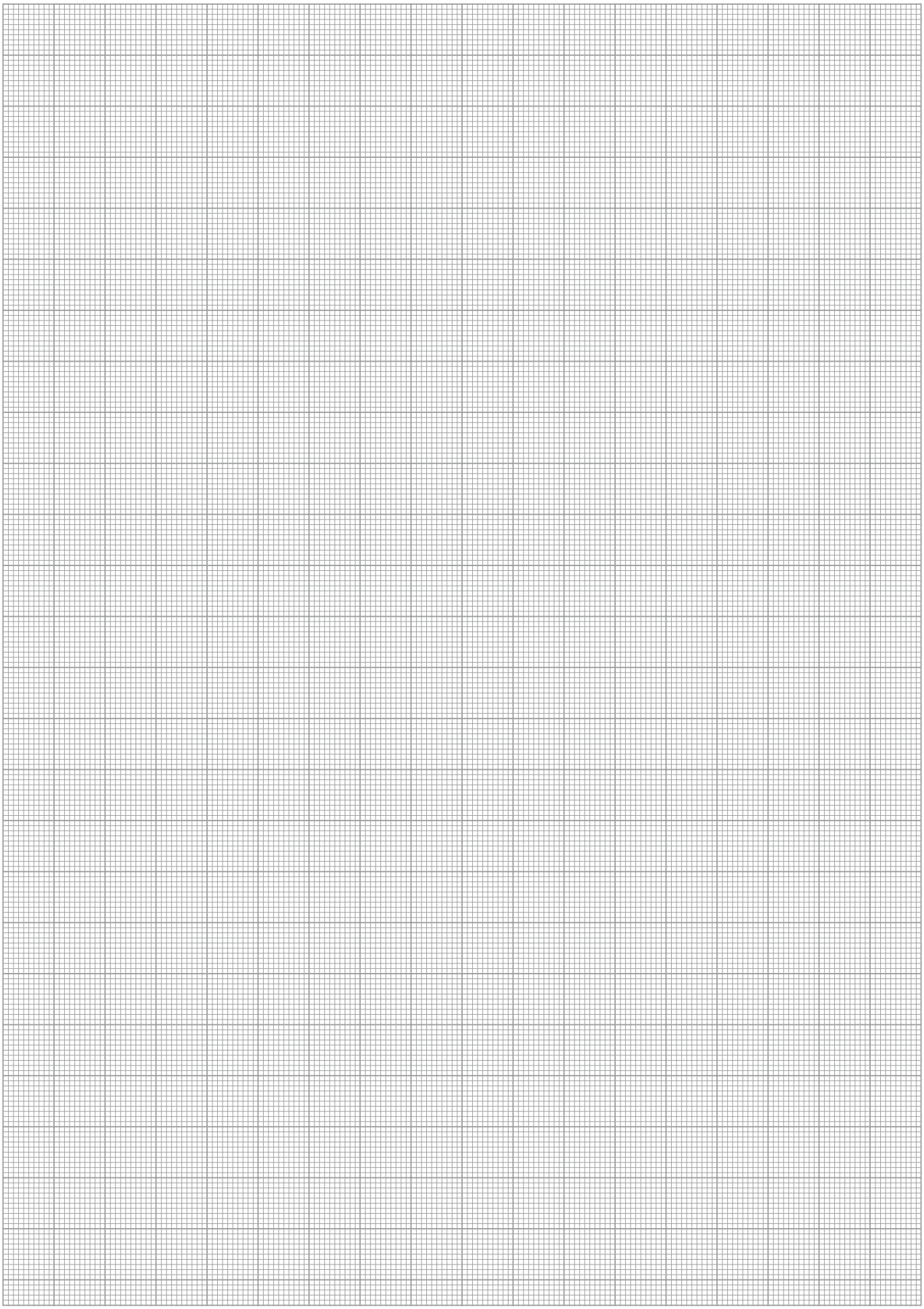

# JGP 64

**Pneumatic • 2-Finger Parallel Gripper • Universal Gripper**



## Gripping force, I.D. gripping

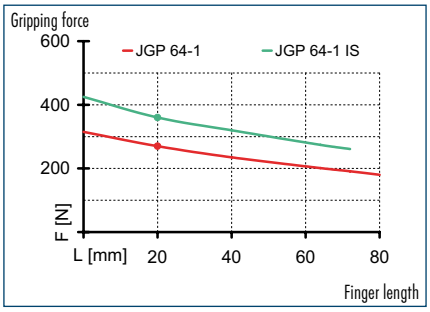


## Gripping force, O.D. gripping

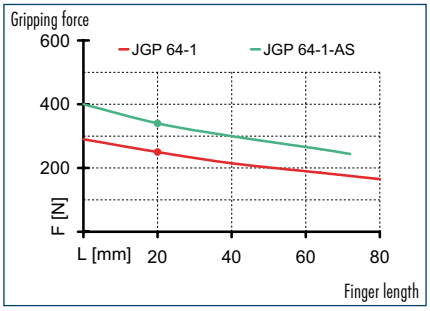


## Finger load

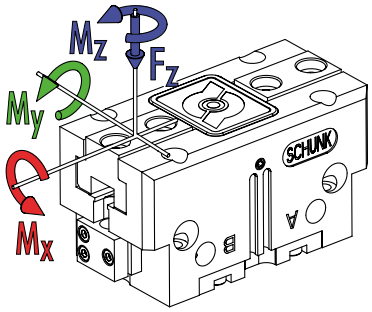


$M_x$ max. 32.00 Nm
$M_y$ max. 48.00 Nm
$M_z$ max. 32.00 Nm
$F_z$ max. 800.0 N

ⓘ The indicated moments and forces are static values, apply per base jaw and may occur simultaneously. $M_y$ may arise in addition to the moment generated by the gripping force itself. If the max. permitted finger weight is exceeded, it is imperative to throttle the air pressure so that the jaw movement occurs without any hitting or bouncing. Service life may be reduced.

## Technical data

| Description | | JGP 64-1 | JGP 64-1-AS | JGP 64-1-IS |
|---|---|---|---|---|
| ID | | 0308620 | 0308621 | 0308622 |
| Stroke per finger | [mm] | 6 | 6 | 6 |
| Closing force | [N] | 250 | 340 | |
| Opening force | [N] | 270 | | 360 |
| Min. spring force | [N] | | 90 | 90 |
| Weight | [kg] | 0.28 | 0.37 | 0.37 |
| Recommended workpiece weight | [kg] | 1.25 | 1.25 | 1.25 |
| Air consumption per double stroke | [cm³] | 9 | 9 | 9 |
| Min./max. operating pressure | [bar] | 2.5/8 | 4/6.5 | 4/6.5 |
| Nominal operating pressure | [bar] | 6 | 6 | 6 |
| Closing/opening time | [s] | 0.03/0.03 | 0.02/0.04 | 0.04/0.02 |
| Max. permitted finger length | [mm] | 80 | 72 | 72 |
| Max. permitted weight per finger | [kg] | 0.35 | 0.35 | 0.35 |
| IP class | | 40 | 40 | 40 |
| Min./max. ambient temperature | [°C] | -10/90 | -10/90 | -10/90 |
| Repeat accuracy | [mm] | 0.01 | 0.01 | 0.01 |

## Main view

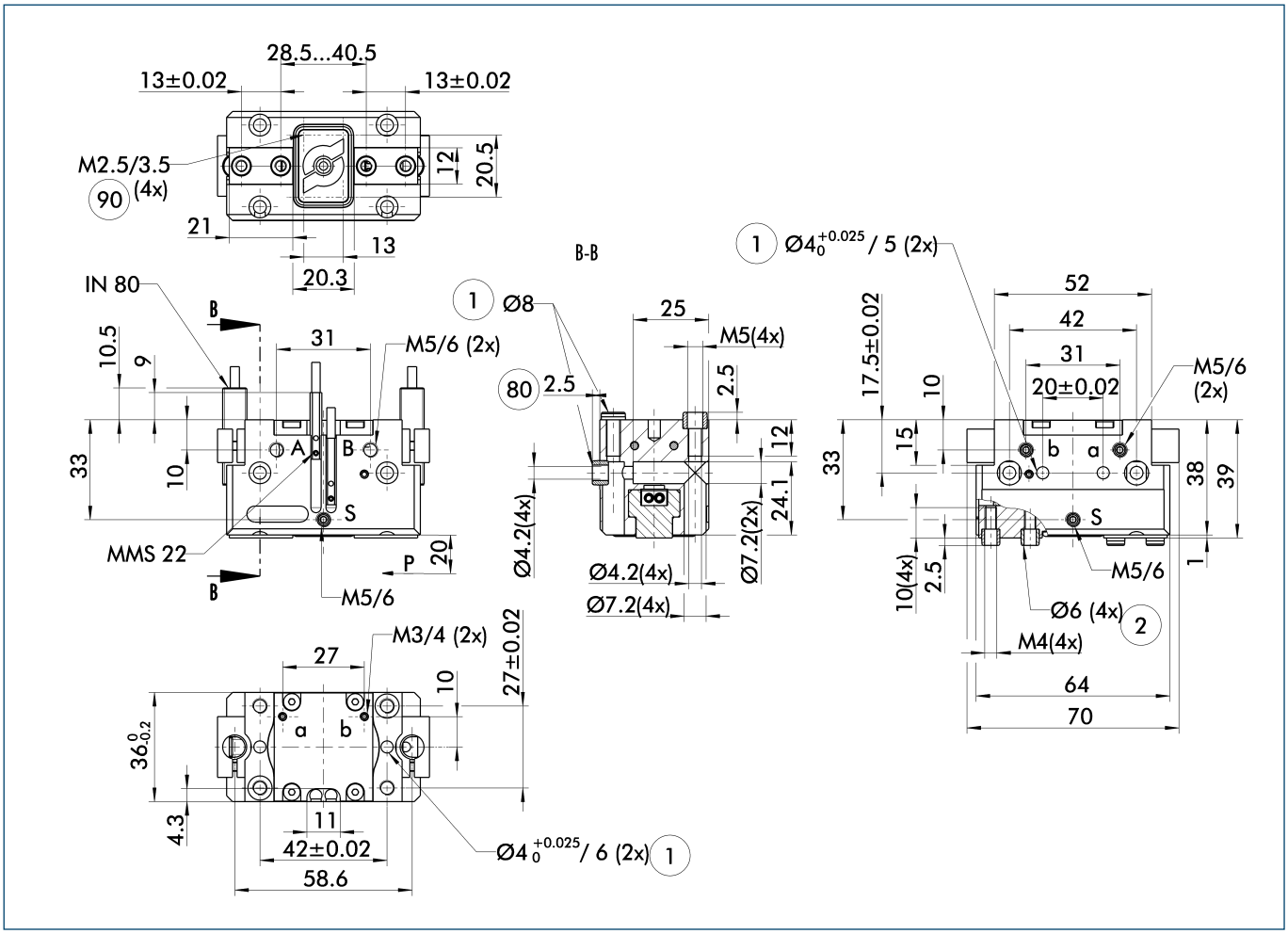


The drawing shows the gripper in the basic version with closed jaws, the dimensions do not include the options described below.

ⓘ The SDV-P pressure maintenance valve can also be used for I.D. or O.D. gripping alternatively or in addition to the spring-loaded, mechanical gripping force maintenance device (see "Accessories" catalog section).

A, a Main/direct connection, gripper opening
B, b Main/direct connection, gripper closing
S Air purge connection
① Gripper connection
② Finger connection
⑧⓪ Depth of the centering sleeve hole in the matching part
⑨⓪ Thread below the cover for fastening external attachments

## Hose-free direct connection

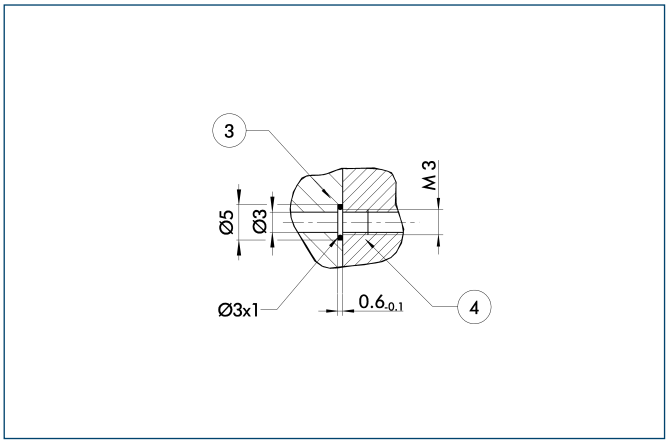


③ Adapter
④ Gripper

The direct connection is used for supplying compressed air without hoses. Instead, the pressure medium is fed through bore-holes in the mounting plate.

## AS/IS gripping force maintenance device

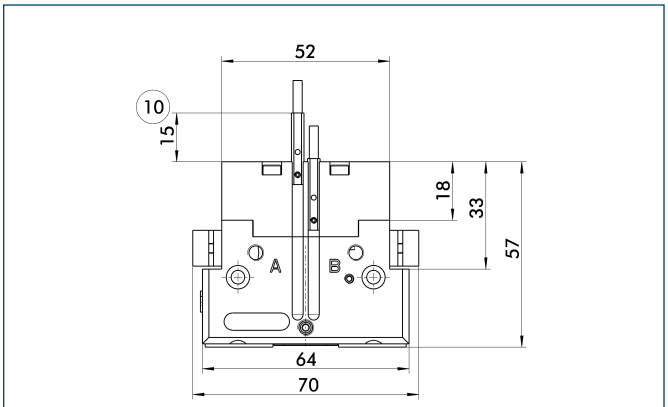


⑩ Projection applies only for AS version

The mechanical gripping force maintenance device ensures a minimum gripping force even in case of pressure drop. This acts as closing force in the AS version, and as opening force in the IS version. In addition, the gripping force maintenance device can also be used for increasing the gripping force or for single-acting gripping.

## Modular Assembly Automation

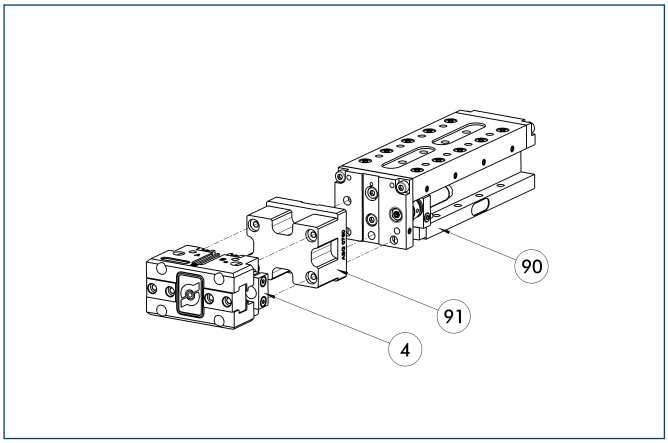


④ Gripper
⑨① ASG
⑨⓪ CLM

This gripper can be combined with the standard linear modules LM, KLM, CLM and ELM of the GEMOTEC modular system. For more information see our main catalog "Modular Assembly Automation".

## Maximum permitted finger projection

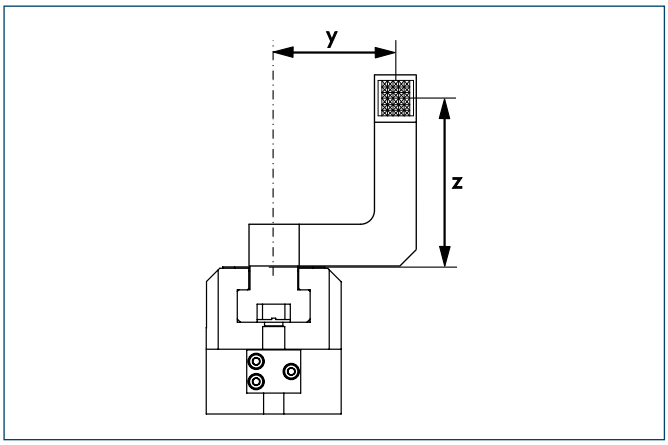


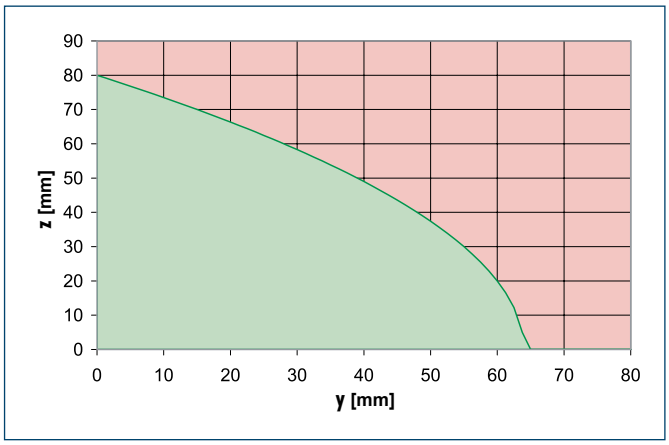


Permitted range
Inadmissible range

The curve applies to the basic version (stroke -1). For other versions, the curve will be parallel but offset in line with the max. permitted finger length.

## Quick-change Jaw System

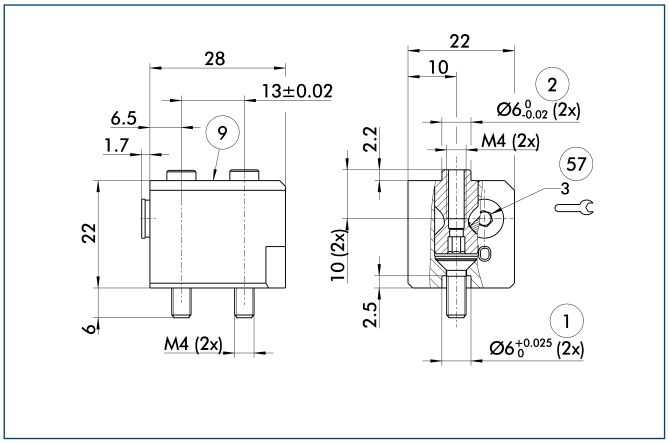


① Gripper connection
② Finger connection
⑨ For mounting screw connection diagram, see basic version
57 Locking

The BSWS quick-change jaw system enables top jaws to be changed on the gripper manually and rapidly. An adapter (BSWS-A) and a base (BSWS-B) are required for each gripper jaw.
For a reverse assembly without height set-up, one adapter (BSWS-A) and a kit (BSWS-U) per gripper jaw are required. Another effect of the BSWS-U is, that there are no disturbing fastening bores in the finger contour.

| Description | ID |
|---|---|
| Quick-change Jaw System adapter | |
| BSWS-A 64 | **0303022** |
| Quick-change Jaw System base | |
| BSWS-B 64 | **0303023** |
| Quick-change Jaw System reversed | |
| BSWS-U 64 | **0303041** |

## Universal intermediate jaw

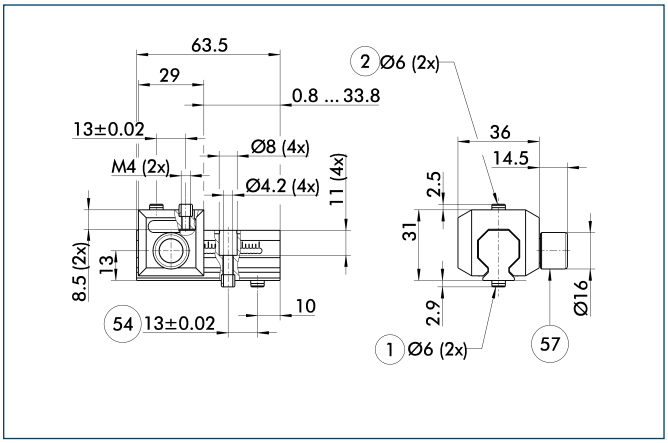


① Gripper connection
② Finger connection
54 Optional right or left connection
57 Locking

The universal intermediate jaw allows fast tool-free and reliable plugging and shifting of top jaws at the gripper.

| Description | ID | Grid dimension |
|---|---|---|
| Universal intermediate jaw | | |
| UZB 64 | **0300042** | 1.5 mm |

ⓘ The slide UZB-S can be removed completely and has to be ordered separately. Moreover, it allows a fast jaw change.

You can find more detailed information and individual parts of the above-mentioned accessories in the “Accessories” catalog section.

## Force measuring jaws

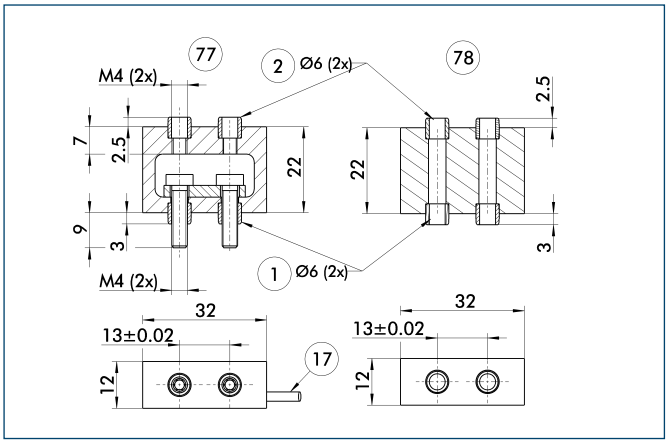


① Gripper connection
② Finger connection
⑰ Cable outlet
⑦⑦ Active intermediate jaws
⑦⑧ Passive intermediate jaws

Force measuring jaws measure gripping forces, but can also determine workpiece weights or dimensional deviations. There are active and passive intermediate jaws (FMS-ZBA or FMS-ZBP). At least one active force measuring jaw is required per gripper, the rest can be passive. For each active jaw, a FMS-A1 control unit and a FMS-A connection cable are required.

| Description | ID |
|---|---|
| Active intermediate jaws | |
| FMS-ZBA 64 | **0301832** |
| Passive intermediate jaws | |
| FMS-ZBP 64 | **0301833** |
| Electronic Processor | |
| FMS-A1 | **0301810** |
| Connection cables | |
| FMS-AK0200 | **0301820** |
| FMS-AK0500 | **0301821** |
| FMS-AK1000 | **0301822** |
| FMS-AK2000 | **0301823** |

## Finger blanks

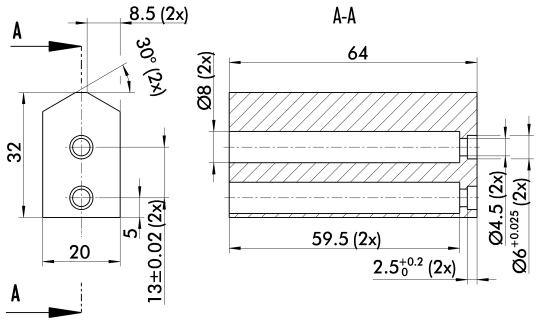


Finger blanks for customized subsequent machining

| Description | ID | Material | Scope of delivery |
|---|---|---|---|
| Finger blanks | | | |
| ABR-plus 64 | **0300010** | Aluminum | 1 |
| SBR-plus 64 | **0300020** | 16 MnCr 5 | 1 |

You can find more detailed information and individual parts of the above-mentioned accessories in the "Accessories" catalog section.

## Tolerance compensation unit

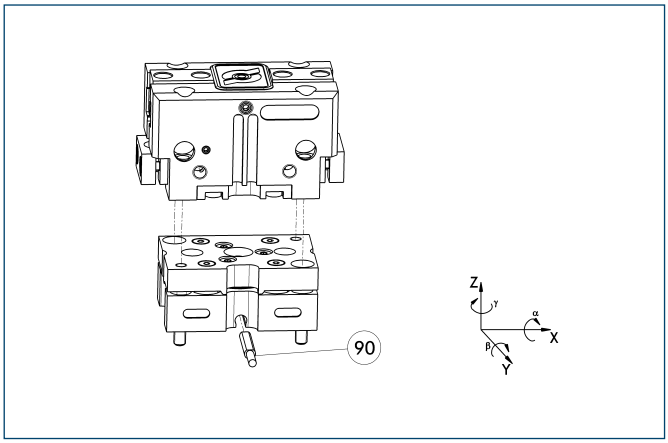


(90) Monitoring of locking

Grippers can be directly mounted without an adapter plate. Tolerance compensation unit and gripper have an identical screw connection diagram. Therefore the tolerance compensation units can be assembled later. Please consider the additional assembly height of the tolerance compensation unit. For details see catalog “Robot Accessories”.

| Description | ID | Locking | Deflection |
|---|---|---|---|
| Compensation unit | | | |
| TCU-064-3-MV-P | **0324774** | Yes | ±3°/±1°/±2° |
| TCU-064-3-OV-P | **0324775** | No | ±3°/±1°/±2° |

## Compensation unit with spring reset

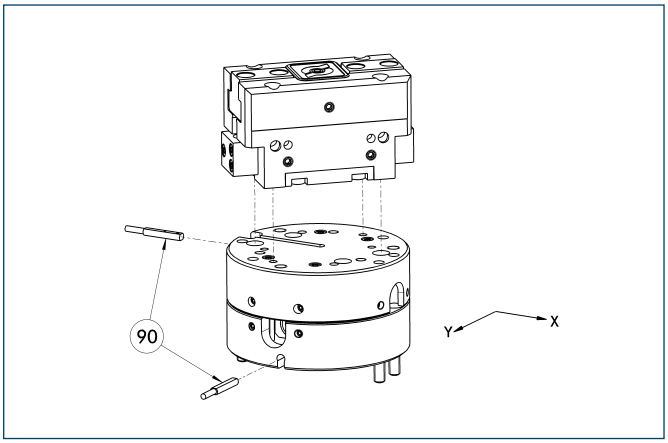


(90) Monitoring

Grippers can be directly mounted without using an adapter plate. For details see our catalog “Robot Accessories”.

| Description | ID | Compensation travel | Reset force |
|---|---|---|---|
| Compensation unit | | | |
| AGE-F-XY-063-1 | **0324940** | ±4 mm | 9 N |
| AGE-F-XY-063-2 | **0324941** | ±4 mm | 10 N |
| AGE-F-XY-063-3 | **0324942** | ±4 mm | 19.3 N |

## Attachment valves

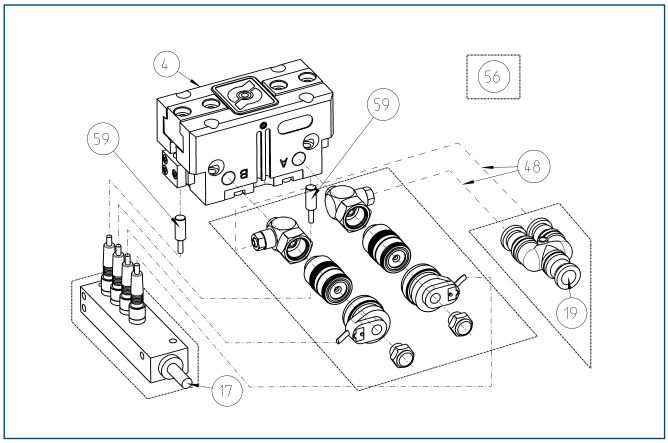


(4) Gripper
(17) Cable outlet
(19) Air connection
(48) Hose
(56) Included in delivery
(59) Monitoring “gripping”

For each gripper one attachment valve ABV is required, optional with distributor for sensors and valves. Attachment valves increase the efficiency, reduce the installation work and air consumption and simplify air supply. For details please refer to the “Accessories” catalog section.

| Description | ID |
|---|---|
| Attachment valves | |
| ABV-MV15-M5 | **0303323** |
| ABV-MV15-M5-V2-M8 | **0303386** |
| ABV-MV15-M5-V4-M8 | **0303356** |
| ABV-MV15-M5-V8-M8 | **0303357** |

## Programmable magnetic switch

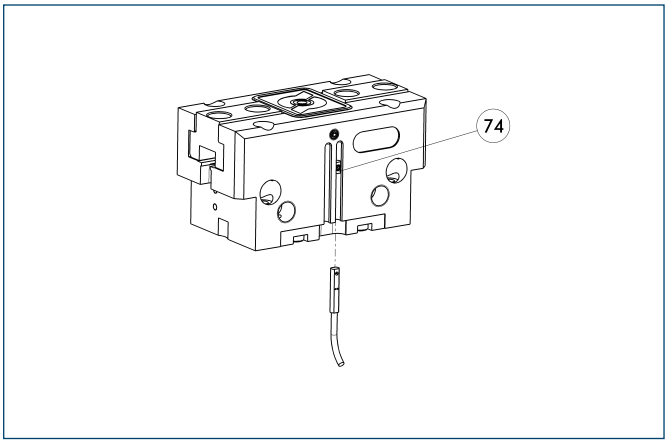


(74) Stop for MMS-P

Position monitoring with two programmable positions per sensor. The end position monitoring is mounted in the C-slot.

| Description | ID | Recommended product |
|---|---|---|
| Programmable magnetic switch | | |
| MMS-P 22-S-M8-PNP | **0301370** | • |
| MMSK-P 22-S-PNP | **0301371** | |
| Connection cables | | |
| KA BG08-L 4P-0500 | **0307767** | |
| KA BG08-L 4P-1000 | **0307768** | |
| KA BW08-L 4P-0500 | **0307765** | |
| KA BW08-L 4P-1000 | **0307766** | |
| Sensor Distributor | | |
| V2-M8-4P-2XM8-3P | **0301380** | |

ⓘ Please note the minimum permitted bending radii for the sensor cables, which are generally 35 mm.
ⓘ Per gripper one sensor (closer/NO) is required, optionally a cable extension.

You can find more detailed information and individual parts of the above-mentioned accessories in the “Accessories” catalog section.

## Electronic magnetic switches

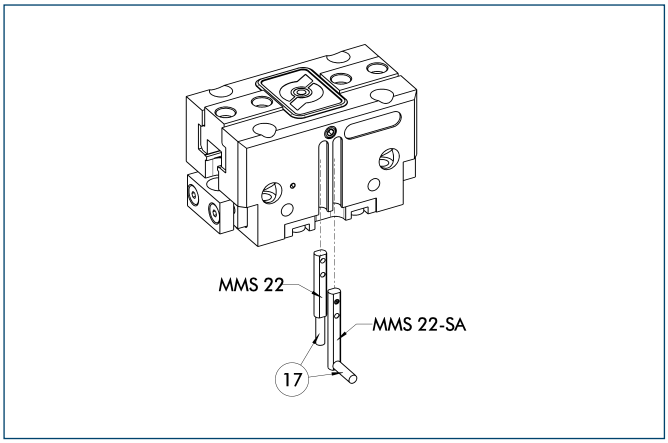


⑰ Cable outlet

End position monitoring for mounting in the C-slot

| Description | ID | Recommended product |
|---|---|---|
| Electronic magnetic switches | | |
| MMS 22-S-M5-PNP | 0301438 | |
| MMS 22-S-M5-NPN | 0301439 | |
| MMS 22-S-M8-PNP | 0301432 | • |
| MMS 22-S-M8-NPN | 0301433 | |
| MMSK 22-S-PNP | 0301434 | |
| MMSK 22-S-NPN | 0301435 | |
| Electronic magnetic switches with lateral cable outlet | | |
| MMS 22-S-M5-PNP-SA | 0301448 | |
| MMS 22-S-M5-NPN-SA | 0301449 | |
| MMS 22-S-M8-PNP-SA | 0301442 | • |
| MMS 22-S-M8-NPN-SA | 0301443 | |
| MMSK 22-S-PNP-SA | 0301444 | |
| MMSK 22-S-NPN-SA | 0301445 | |
| Connection cables | | |
| KA BG05-L 3P-0300 | 0301652 | |
| KA BG08-L 3P-0300-PNP | 0301622 | |
| KA BG08-L 3P-0500-PNP | 0301623 | |
| KA BW05-L 3P-0300 | 0301650 | |
| KA BW08-L 3P-0300-NPN | 0301602 | |
| KA BW08-L 3P-0300-PNP | 0301594 | |
| KA BW08-L 3P-0500-NPN | 9641116 | |
| KA BW08-L 3P-0500-PNP | 0301502 | |
| Cable extensions | | |
| KV BW08-SG08 3P-0030-PNP | 0301495 | |
| KV BW08-SG08 3P-0100-PNP | 0301496 | |
| KV BW08-SG08 3P-0200-PNP | 0301497 | |

ⓘ Two sensors (closer/NO) are required for each gripper, plus extension cables as an option.

ⓘ Please note the minimum permitted bending radii for the sensor cables, which are generally 35 mm.

## Inductive proximity switches

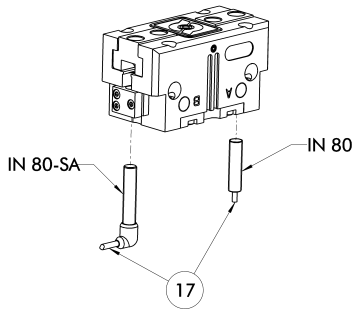


⑰ Cable outlet

End position monitoring for direct mounting

| Description | ID | Recommended product |
|---|---|---|
| Inductive proximity switches | | |
| IN 80-S-M8 | 0301478 | • |
| IN 80-S-M12 | 0301578 | |
| INK 80-S | 0301550 | |
| Inductive proximity switch with lateral outlet | | |
| IN 80-S-M12-SA | 0301587 | |
| IN 80-S-M8-SA | 0301483 | • |
| INK 80-S-SA | 0301566 | |
| Connection cables | | |
| KA BG08-L 3P-0300-PNP | 0301622 | |
| KA BG08-L 3P-0500-PNP | 0301623 | |
| KA BG12-L 3P-0500-PNP | 30016369 | |
| KA BW08-L 3P-0300-PNP | 0301594 | |
| KA BW08-L 3P-0500-PNP | 0301502 | |
| KA BW12-L 3P-0300-PNP | 0301503 | |
| KA BW12-L 3P-0500-PNP | 0301507 | |
| Cable extensions | | |
| KV BG12-SG12 3P-0030-PNP | 0301999 | |
| KV BG12-SG12 3P-0060-PNP | 0301998 | |
| KV BW08-SG08 3P-0030-PNP | 0301495 | |
| KV BW08-SG08 3P-0100-PNP | 0301496 | |
| KV BW08-SG08 3P-0200-PNP | 0301497 | |
| KV BW12-SG12 3P-0030-PNP | 0301595 | |
| KV BW12-SG12 3P-0100-PNP | 0301596 | |
| KV BW12-SG12 3P-0200-PNP | 0301597 | |

ⓘ Two sensors (closer/NO) are required for each gripper, plus extension cables as an option.

ⓘ Please note the minimum permitted bending radii for the sensor cables, which are generally 35 mm.

You can find more detailed information and individual parts of the above-mentioned accessories in the “Accessories” catalog section.

## Cylindrical Reed Switches

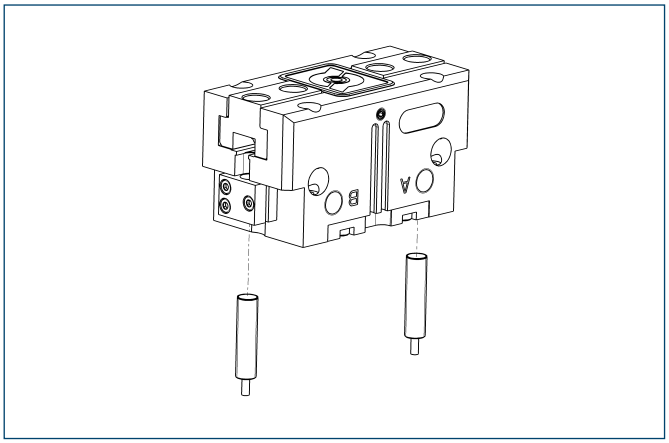

End position monitoring mounted with mounting kit

| Description | ID |
|---|---|
| Mounting kit for proximity switch | |
| AS-RMS 80 PGN/PZN-plus 64/80 | **0377725** |
| Reed Switches | |
| RMS 80-S-M8 | **0377721** |

ⓘ Two sensors (closer/NO) are required for each gripper, plus extension cables as an option.

ⓘ This mounting kit needs to be ordered optionally as an accessory.

ⓘ Please note the minimum permitted bending radii for the sensor cables, which are generally 35 mm.

## Analog position sensor

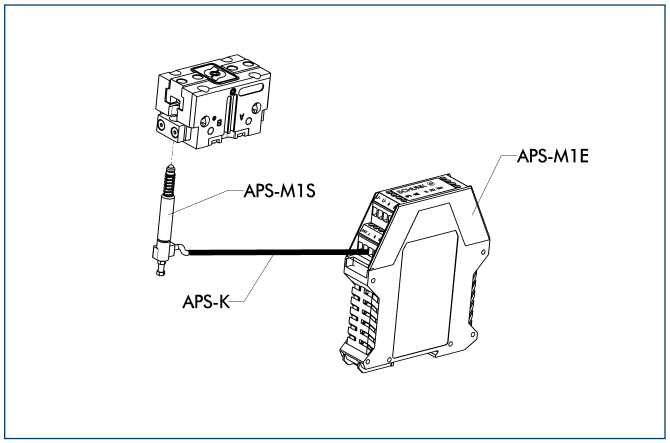


Analog multi position monitoring for any desired positions

| Description | ID |
|---|---|
| Mounting kit | |
| AS-APS-M1-64/1 | **0302075** |
| Connection cables | |
| APS-K0200 | **0302066** |
| APS-K0700 | **0302068** |
| Electronic Processor | |
| APS-M1E | **0302064** |
| Sensor | |
| APS-M1S | **0302062** |

ⓘ When using an APS system, for each gripper a mounting kit (AS-APS), an APS sensor (APS-M 1S, incl. 3 m cable) as well as an electronics (APS-M1e) are required.

ⓘ An extension cable (APS-K) can be connected between the sensor and the electronics as an option. The max. cable length between the sensor and the electronics is 10 m, between the electronics and their control unit (PLC) it is max. 1 m.

You can find more detailed information and individual parts of the above-mentioned accessories in the “Accessories” catalog section.

## Flexible Position Sensor

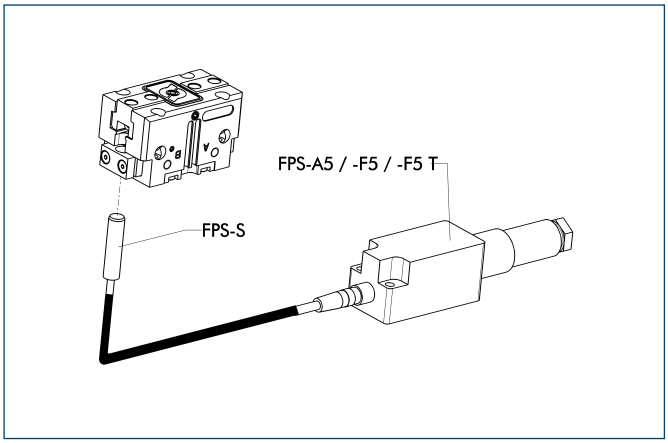


Flexible position monitoring of up to five positions

| Description | ID |
|---|---|
| Mounting kit for FPS | |
| AS-PGN/PZN-plus 64/1, PGN/PZN-plus 80/2 | **0301630** |
| Electronic Processor | |
| FPS-F5 | **0301805** |
| FPS-F5 T | **0301807** |
| Sensor | |
| FPS-S M8 | **0301704** |

ⓘ When using a FPS system, a FPS sensor (FPS-S) and a control unit (FPS-F5 / F5 T or A5) are required for each gripper as well as a mounting kit (AS), if listed. Cable extensions (KV) are available as options in the “Accessories” catalog section.

You can find more detailed information and individual parts of the above-mentioned accessories in the “Accessories” catalog section.

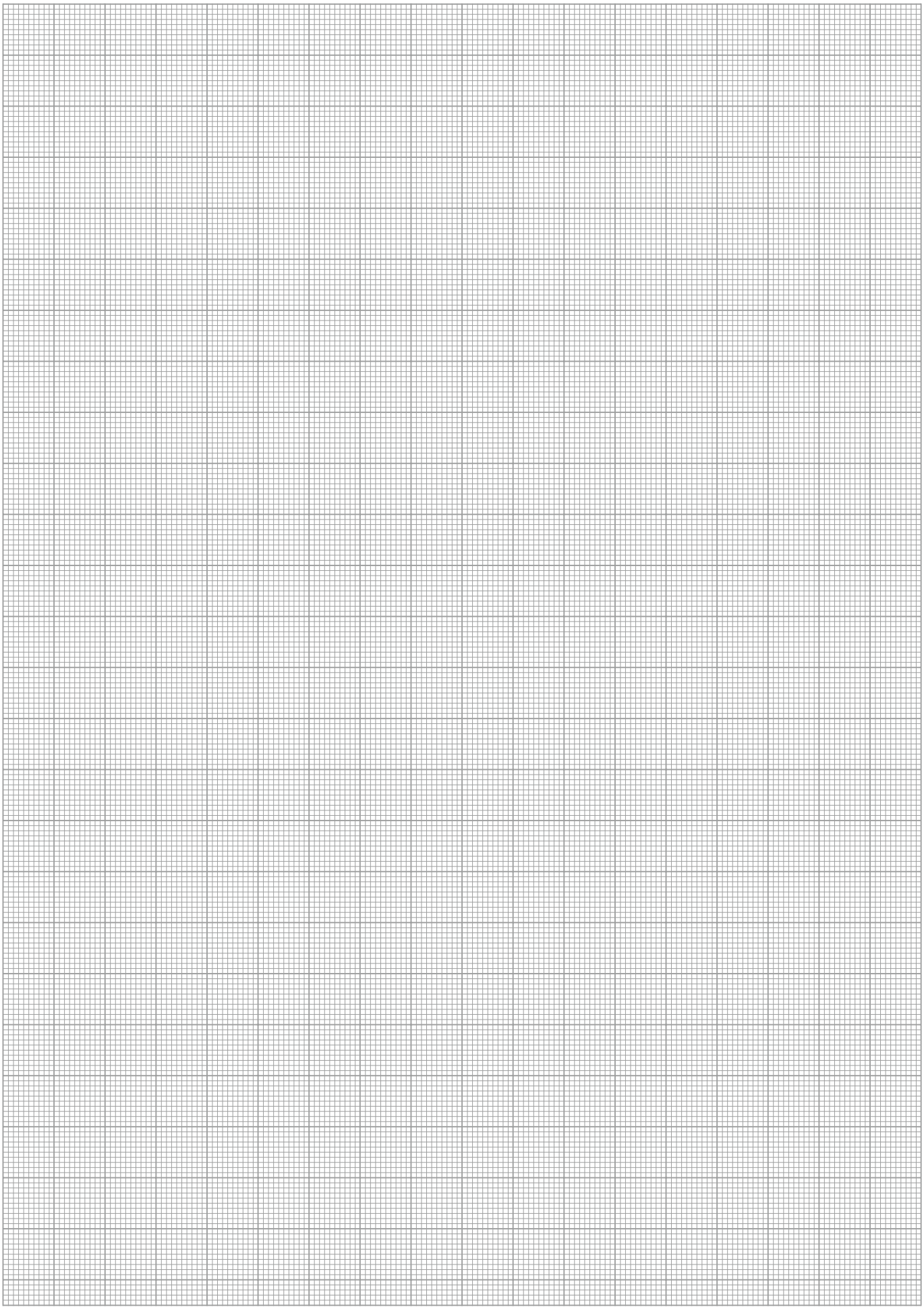

# JGP 80

**Pneumatic • 2-Finger Parallel Gripper • Universal Gripper**




## Gripping force, I.D. gripping

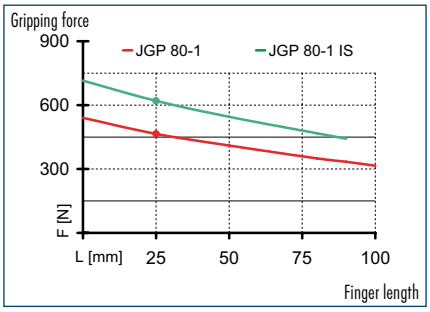


## Gripping force, O.D. gripping

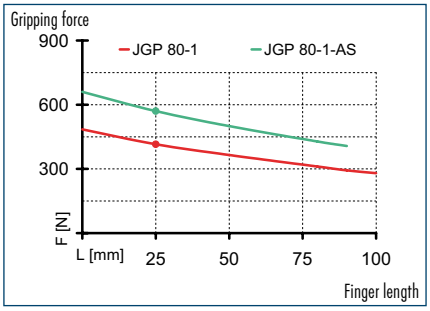


## Finger load

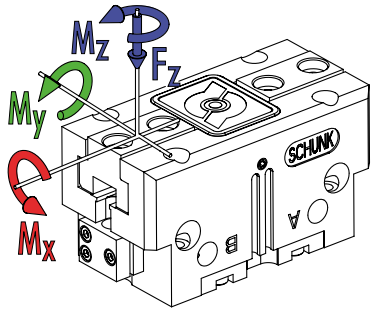


- $M_x$ max. 48.00 Nm
- $M_y$ max. 76.00 Nm
- $M_z$ max. 44.00 Nm
- $F_z$ max. 1200.0 N

ⓘ The indicated moments and forces are static values, apply per base jaw and may occur simultaneously. $M_y$ may arise in addition to the moment generated by the gripping force itself. If the max. permitted finger weight is exceeded, it is imperative to throttle the air pressure so that the jaw movement occurs without any hitting or bouncing. Service life may be reduced.

## Technical data

| Description | | JGP 80-1 | JGP 80-1-AS | JGP 80-1-IS |
|---|---|---|---|---|
| **ID** | | **0308800** | **0308801** | **0308802** |
| Stroke per finger | [mm] | 8 | 8 | 8 |
| Closing force | [N] | 415 | 570 | |
| Opening force | [N] | 465 | | 620 |
| Min. spring force | [N] | | 155 | 155 |
| Weight | [kg] | 0.5 | 0.6 | 0.6 |
| Recommended workpiece weight | [kg] | 2.1 | 2.1 | 2.1 |
| Air consumption per double stroke | [cm³] | 21 | 21 | 21 |
| Min./max. operating pressure | [bar] | 2.5/8 | 4/6.5 | 4/6.5 |
| Nominal operating pressure | [bar] | 6 | 6 | 6 |
| Closing/opening time | [s] | 0.04/0.04 | 0.03/0.05 | 0.05/0.03 |
| Max. permitted finger length | [mm] | 100 | 90 | 90 |
| Max. permitted weight per finger | [kg] | 0.6 | 0.6 | 0.6 |
| IP class | | 40 | 40 | 40 |
| Min./max. ambient temperature | [°C] | -10/90 | -10/90 | -10/90 |
| Repeat accuracy | [mm] | 0.01 | 0.01 | 0.01 |

## Main view

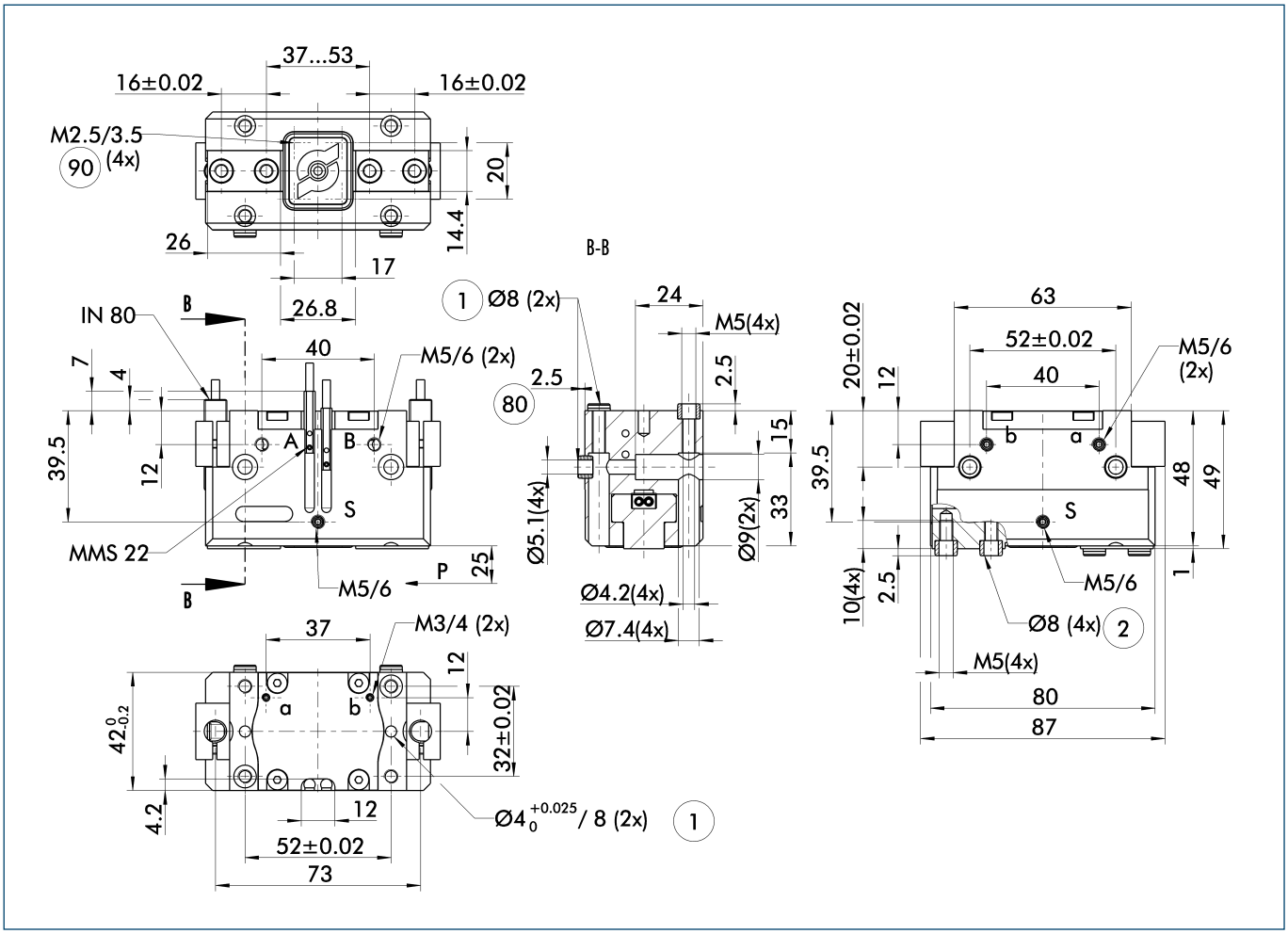


The drawing shows the gripper in the basic version with closed jaws, the dimensions do not include the options described below.

ⓘ The SDV-P pressure maintenance valve can also be used for I.D. or O.D. gripping alternatively or in addition to the spring-loaded, mechanical gripping force maintenance device (see "Accessories" catalog section).

A, a Main/direct connection, gripper opening
B, b Main/direct connection, gripper closing
S Air purge connection
① Gripper connection
② Finger connection
⑧⓪ Depth of the centering sleeve hole in the matching part
⑨⓪ Thread below the cover for fastening external attachments

## Hose-free direct connection

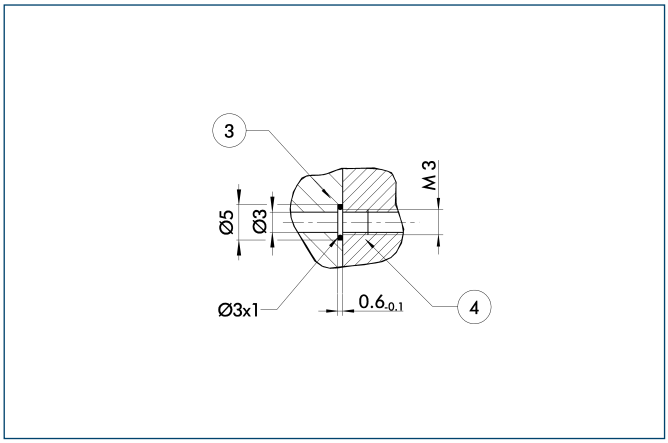


③ Adapter
④ Gripper

The direct connection is used for supplying compressed air without hoses. Instead, the pressure medium is fed through bore-holes in the mounting plate.

## AS/IS gripping force maintenance device

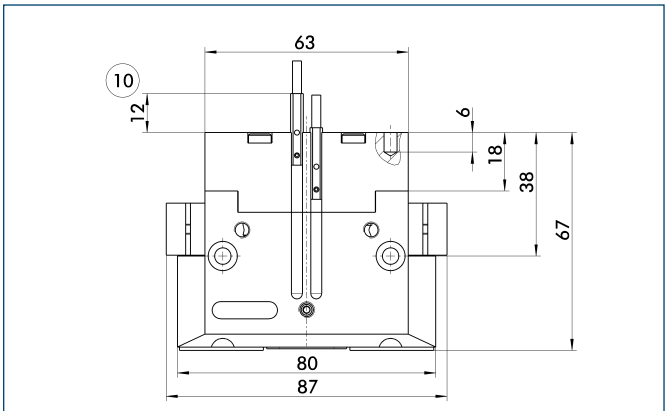


⑩ Projection applies only for AS version

The mechanical gripping force maintenance device ensures a minimum gripping force even in case of pressure drop. This acts as closing force in the AS version, and as opening force in the IS version. In addition, the gripping force maintenance device can also be used for increasing the gripping force or for single-acting gripping.

## Modular Assembly Automation

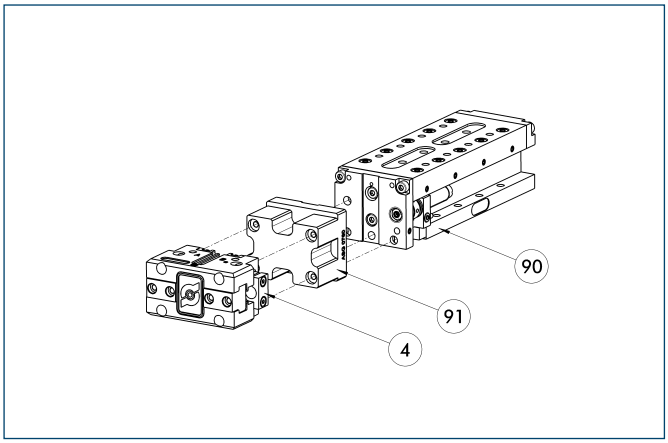


④ Gripper
⑨① ASG
⑨⓪ CLM

This gripper can be combined with the standard linear modules LM, KLM, CLM and ELM of the GEMOTEC modular system. For more information see our main catalog "Modular Assembly Automation".

## Maximum permitted finger projection

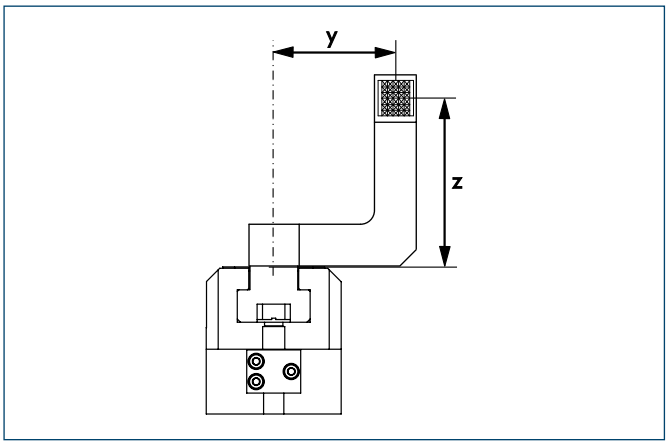


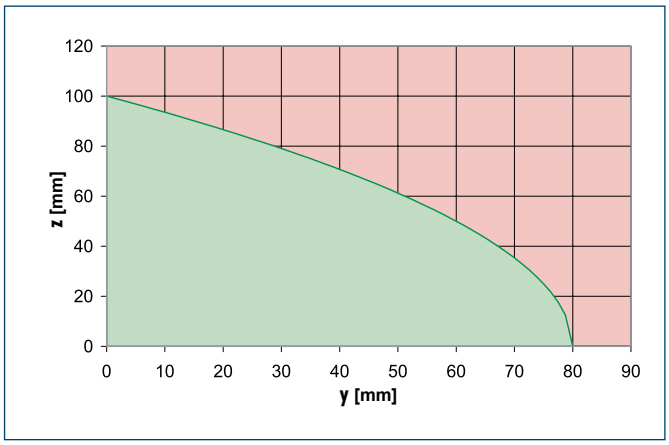


Permitted range
Inadmissible range

The curve applies to the basic version (stroke -1). For other versions, the curve will be parallel but offset in line with the max. permitted finger length.

## Quick-change Jaw System

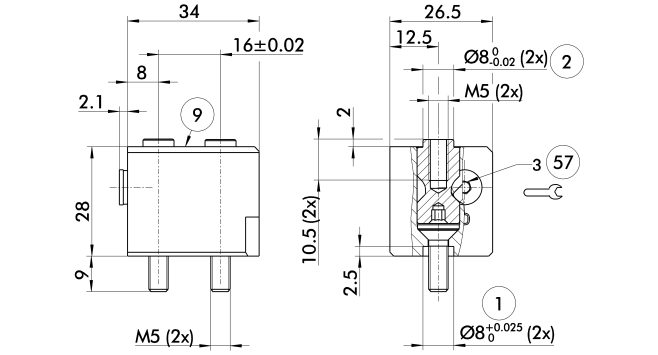


① Gripper connection
② Finger connection
⑨ For mounting screw connection diagram, see basic version
57 Locking

The BSWS quick-change jaw system enables top jaws to be changed on the gripper manually and rapidly. An adapter (BSWS-A) and a base (BSWS-B) are required for each gripper jaw.
For a reverse assembly without height set-up, one adapter (BSWS-A) and a kit (BSWS-U) per gripper jaw are required. Another effect of the BSWS-U is, that there are no disturbing fastening bores in the finger contour.

| Description | ID |
|---|---|
| Quick-change Jaw System adapter | |
| BSWS-A 80 | **0303024** |
| Quick-change Jaw System base | |
| BSWS-B 80 | **0303025** |
| Quick-change Jaw System reversed | |
| BSWS-U 80 | **0303042** |

## Universal intermediate jaw

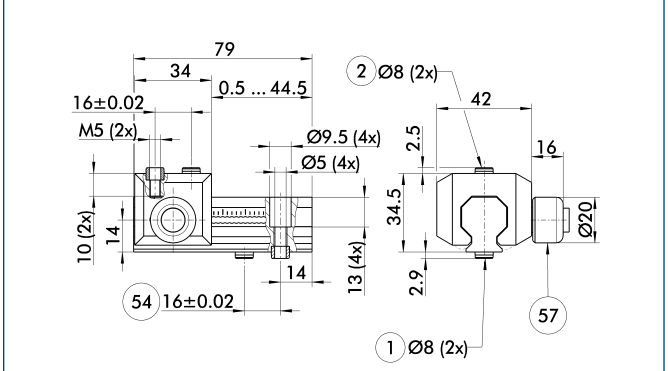


① Gripper connection
② Finger connection
54 Optional right or left connection
57 Locking

The universal intermediate jaw allows fast tool-free and reliable plugging and shifting of top jaws at the gripper.

| Description | ID | Grid dimension |
|---|---|---|
| Universal intermediate jaw | | |
| UZB 80 | **0300043** | 2 mm |
| UZB-S 80 | **5518271** | 2 mm |

ⓘ The slide UZB-S can be removed completely and has to be ordered separately. Moreover, it allows a fast jaw change.

You can find more detailed information and individual parts of the above-mentioned accessories in the “Accessories” catalog section.

## Force measuring jaws

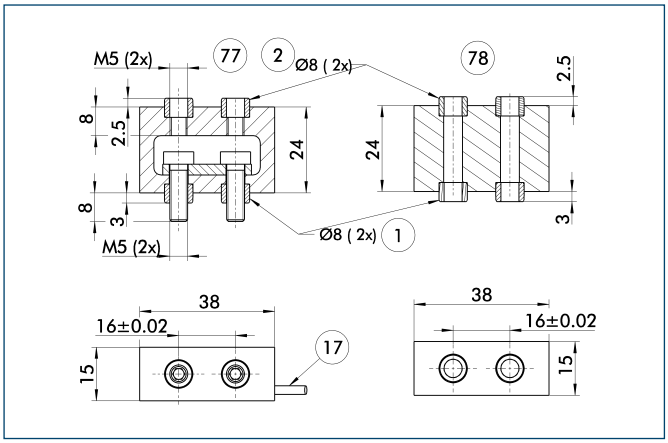


① Gripper connection
② Finger connection
⑰ Cable outlet
⑦⑦ Active intermediate jaws
⑦⑧ Passive intermediate jaws

Force measuring jaws measure gripping forces, but can also determine workpiece weights or dimensional deviations. There are active and passive intermediate jaws (FMS-ZBA or FMS-ZBP). At least one active force measuring jaw is required per gripper, the rest can be passive. For each active jaw, a FMS-A1 control unit and a FMS-A connection cable are required.

| Description | ID |
|---|---|
| Active intermediate jaws | |
| FMS-ZBA 80 | **0301834** |
| Passive intermediate jaws | |
| FMS-ZBP 80 | **0301835** |
| Electronic Processor | |
| FMS-A1 | **0301810** |
| Connection cables | |
| FMS-AK0200 | **0301820** |
| FMS-AK0500 | **0301821** |
| FMS-AK1000 | **0301822** |
| FMS-AK2000 | **0301823** |

## Finger blanks

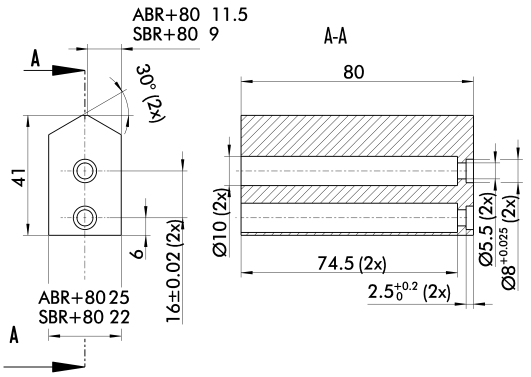


Finger blanks for customized subsequent machining

| Description | ID | Material | Scope of delivery |
|---|---|---|---|
| Finger blanks | | | |
| ABR-plus 80 | **0300011** | Aluminum | 1 |
| SBR-plus 80 | **0300021** | 16 MnCr 5 | 1 |

You can find more detailed information and individual parts of the above-mentioned accessories in the “Accessories” catalog section.

## Tolerance compensation unit

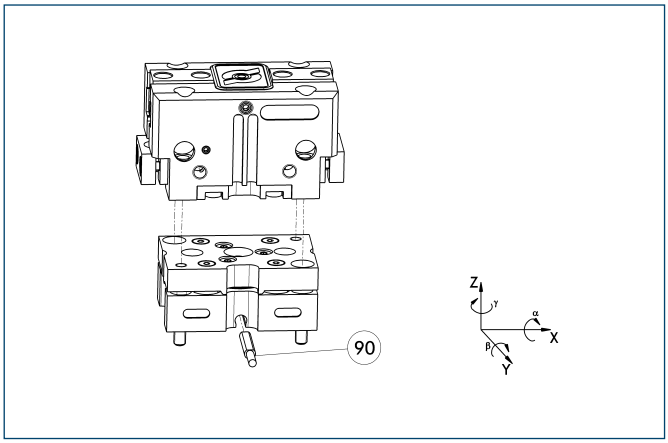


(90) Monitoring of locking

Grippers can be directly mounted without an adapter plate. Tolerance compensation unit and gripper have an identical screw connection diagram. Therefore the tolerance compensation units can be assembled later. Please consider the additional assembly height of the tolerance compensation unit. For details see catalog “Robot Accessories”.

| Description | ID | Locking | Deflection |
|---|---|---|---|
| Compensation unit | | | |
| TCU-080-3-MV-P | **0324792** | Yes | ±1.5°/±1°/±2° |
| TCU-080-3-OV-P | **0324793** | No | ±1.5°/±1°/±2° |

## Compensation unit with spring reset

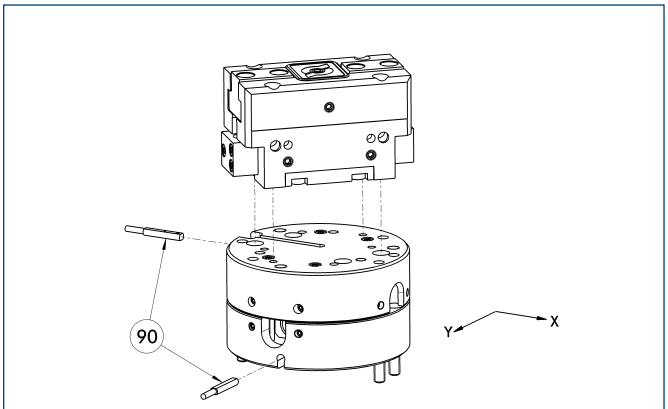


(90) Monitoring

Grippers can be directly mounted without using an adapter plate. For details see our catalog “Robot Accessories”.

| Description | ID | Compensation travel | Reset force |
|---|---|---|---|
| Compensation unit | | | |
| AGE-F-XY-063-1 | **0324940** | ±4 mm | 9 N |
| AGE-F-XY-063-2 | **0324941** | ±4 mm | 10 N |
| AGE-F-XY-063-3 | **0324942** | ±4 mm | 19.3 N |

## Attachment valves

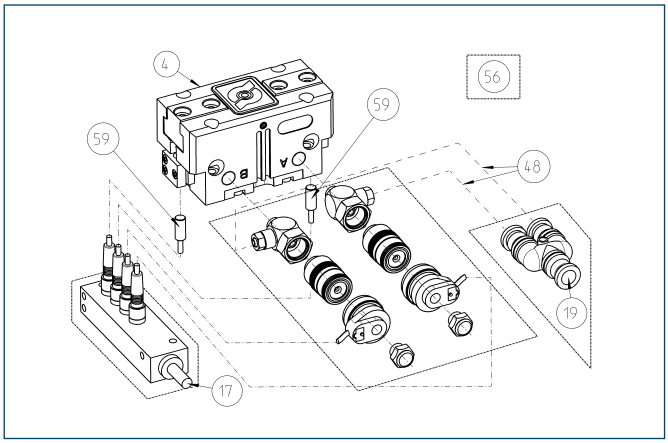


(4) Gripper
(17) Cable outlet
(19) Air connection
(48) Hose
(56) Included in delivery
(59) Monitoring “gripping”

For each gripper one attachment valve ABV is required, optional with distributor for sensors and valves. Attachment valves increase the efficiency, reduce the installation work and air consumption and simplify air supply. For details please refer to the “Accessories” catalog section.

| Description | ID |
|---|---|
| Attachment valves | |
| ABV-MV25-M5 | **0303326** |
| ABV-MV25-M5-V2-M8 | **0303392** |
| ABV-MV25-M5-V4-M8 | **0303362** |
| ABV-MV25-M5-V8-M8 | **0303363** |

## Programmable magnetic switch

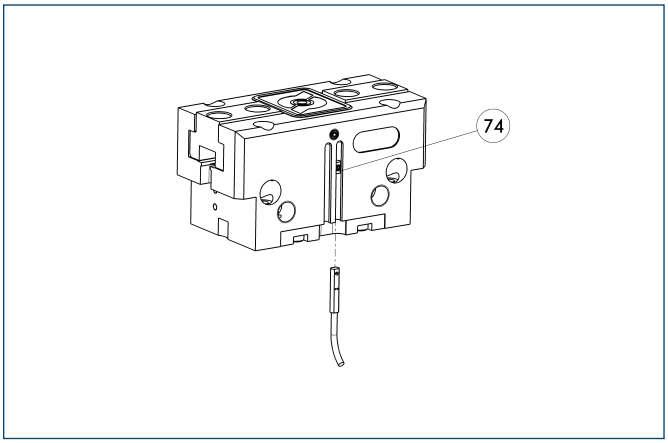


(74) Stop for MMS-P

Position monitoring with two programmable positions per sensor. The end position monitoring is mounted in the C-slot.

| Description | ID | Recommended product |
|---|---|---|
| Programmable magnetic switch | | |
| MMS-P 22-S-M8-PNP | **0301370** | • |
| MMSK-P 22-S-PNP | **0301371** | |
| Connection cables | | |
| KA BG08-L 4P-0500 | **0307767** | |
| KA BG08-L 4P-1000 | **0307768** | |
| KA BW08-L 4P-0500 | **0307765** | |
| KA BW08-L 4P-1000 | **0307766** | |
| Sensor Distributor | | |
| V2-M8-4P-2XM8-3P | **0301380** | |

ⓘ Please note the minimum permitted bending radii for the sensor cables, which are generally 35 mm.
ⓘ Per gripper one sensor (closer/NO) is required, optionally a cable extension.

You can find more detailed information and individual parts of the above-mentioned accessories in the “Accessories” catalog section.

## Electronic magnetic switches

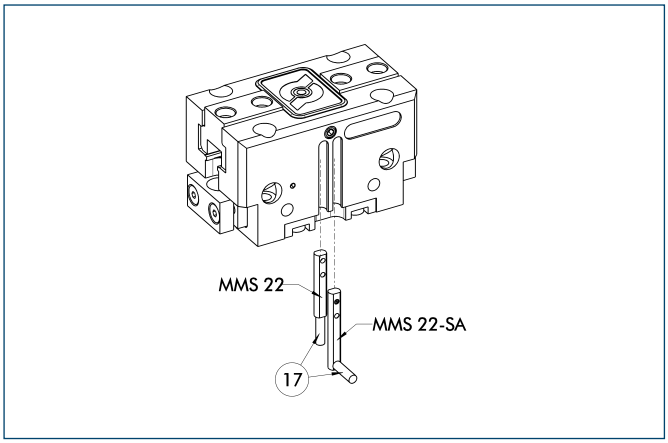


⑰ Cable outlet

End position monitoring for mounting in the C-slot

| Description | ID | Recommended product |
|---|---|---|
| Electronic magnetic switches | | |
| MMS 22-S-M5-PNP | 0301438 | |
| MMS 22-S-M5-NPN | 0301439 | |
| MMS 22-S-M8-PNP | 0301432 | • |
| MMS 22-S-M8-NPN | 0301433 | |
| MMSK 22-S-PNP | 0301434 | |
| MMSK 22-S-NPN | 0301435 | |
| Electronic magnetic switches with lateral cable outlet | | |
| MMS 22-S-M5-PNP-SA | 0301448 | |
| MMS 22-S-M5-NPN-SA | 0301449 | |
| MMS 22-S-M8-PNP-SA | 0301442 | • |
| MMS 22-S-M8-NPN-SA | 0301443 | |
| MMSK 22-S-PNP-SA | 0301444 | |
| MMSK 22-S-NPN-SA | 0301445 | |
| Connection cables | | |
| KA BG05-L 3P-0300 | 0301652 | |
| KA BG08-L 3P-0300-PNP | 0301622 | |
| KA BG08-L 3P-0500-PNP | 0301623 | |
| KA BW05-L 3P-0300 | 0301650 | |
| KA BW08-L 3P-0300-NPN | 0301602 | |
| KA BW08-L 3P-0300-PNP | 0301594 | |
| KA BW08-L 3P-0500-NPN | 9641116 | |
| KA BW08-L 3P-0500-PNP | 0301502 | |
| Cable extensions | | |
| KV BW08-SG08 3P-0030-PNP | 0301495 | |
| KV BW08-SG08 3P-0100-PNP | 0301496 | |
| KV BW08-SG08 3P-0200-PNP | 0301497 | |

ⓘ Two sensors (closer/NO) are required for each gripper, plus extension cables as an option.

ⓘ Please note the minimum permitted bending radii for the sensor cables, which are generally 35 mm.

## Inductive proximity switches

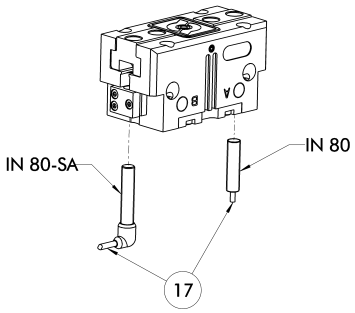


⑰ Cable outlet

End position monitoring for direct mounting

| Description | ID | Recommended product |
|---|---|---|
| Inductive proximity switches | | |
| IN 80-S-M8 | 0301478 | • |
| IN 80-S-M12 | 0301578 | |
| INK 80-S | 0301550 | |
| Inductive proximity switch with lateral outlet | | |
| IN 80-S-M12-SA | 0301587 | |
| IN 80-S-M8-SA | 0301483 | • |
| INK 80-S-SA | 0301566 | |
| Connection cables | | |
| KA BG08-L 3P-0300-PNP | 0301622 | |
| KA BG08-L 3P-0500-PNP | 0301623 | |
| KA BG12-L 3P-0500-PNP | 30016369 | |
| KA BW08-L 3P-0300-PNP | 0301594 | |
| KA BW08-L 3P-0500-PNP | 0301502 | |
| KA BW12-L 3P-0300-PNP | 0301503 | |
| KA BW12-L 3P-0500-PNP | 0301507 | |
| Cable extensions | | |
| KV BG12-SG12 3P-0030-PNP | 0301999 | |
| KV BG12-SG12 3P-0060-PNP | 0301998 | |
| KV BW08-SG08 3P-0030-PNP | 0301495 | |
| KV BW08-SG08 3P-0100-PNP | 0301496 | |
| KV BW08-SG08 3P-0200-PNP | 0301497 | |
| KV BW12-SG12 3P-0030-PNP | 0301595 | |
| KV BW12-SG12 3P-0100-PNP | 0301596 | |
| KV BW12-SG12 3P-0200-PNP | 0301597 | |

ⓘ Two sensors (closer/NO) are required for each gripper, plus extension cables as an option.

ⓘ Please note the minimum permitted bending radii for the sensor cables, which are generally 35 mm.

You can find more detailed information and individual parts of the above-mentioned accessories in the “Accessories” catalog section.

## Cylindrical Reed Switches

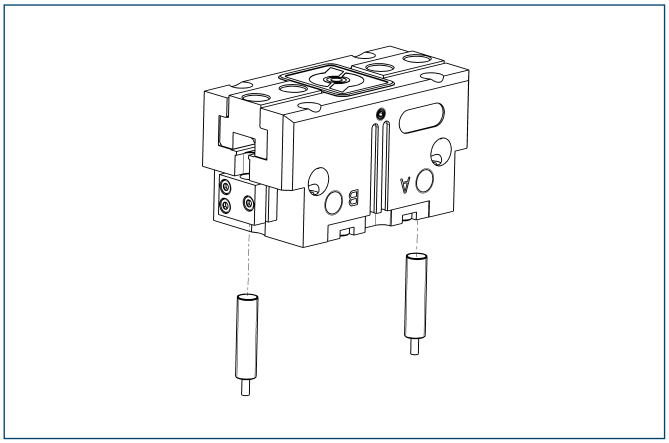

End position monitoring mounted with mounting kit

| Description | ID |
|---|---|
| Mounting kit for proximity switch | |
| AS-RMS 80 PGN/PZN-plus 64/80 | **0377725** |
| Reed Switches | |
| RMS 80-S-M8 | **0377721** |

ⓘ Two sensors (closer/NO) are required for each gripper, plus extension cables as an option.
ⓘ This mounting kit needs to be ordered optionally as an accessory.
ⓘ Please note the minimum permitted bending radii for the sensor cables, which are generally 35 mm.

## Analog position sensor

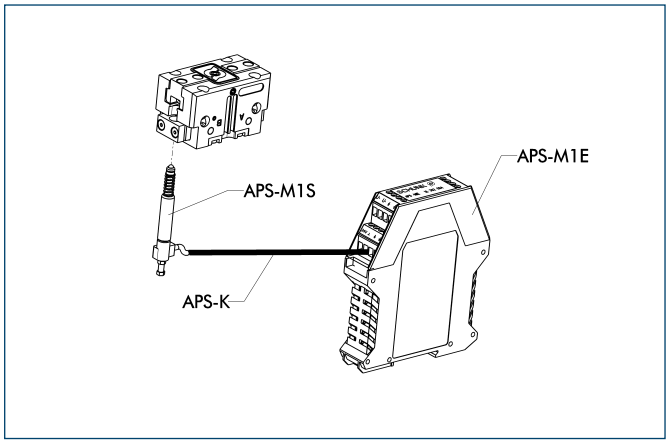


Analog multi position monitoring for any desired positions

| Description | ID |
|---|---|
| Mounting kit | |
| AS-APS-M1-80/1 | **0302077** |
| Connection cables | |
| APS-K0200 | **0302066** |
| APS-K0700 | **0302068** |
| Electronic Processor | |
| APS-M1E | **0302064** |
| Sensor | |
| APS-M1S | **0302062** |

ⓘ When using an APS system, for each gripper a mounting kit (AS-APS), an APS sensor (APS-M 1S, incl. 3 m cable) as well as an electronics (APS-M1e) are required.
ⓘ An extension cable (APS-K) can be connected between the sensor and the electronics as an option. The max. cable length between the sensor and the electronics is 10 m, between the electronics and their control unit (PLC) it is max. 1 m.

You can find more detailed information and individual parts of the above-mentioned accessories in the “Accessories” catalog section.

## Flexible Position Sensor

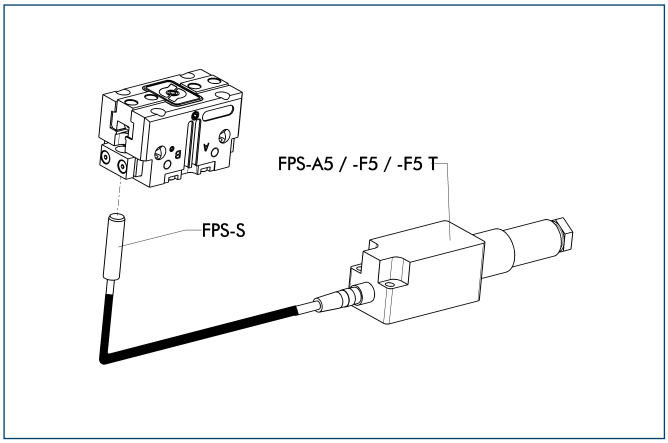


Flexible position monitoring of up to five positions

| Description | ID |
|---|---|
| Mounting kit for FPS | |
| AS-PGN-plus/PZN-plus 80/1, PZB 80/100 | **0301632** |
| Electronic Processor | |
| FPS-F5 | **0301805** |
| FPS-F5 T | **0301807** |
| Sensor | |
| FPS-S M8 | **0301704** |

ⓘ When using a FPS system, a FPS sensor (FPS-S) and a control unit (FPS-F5 / F5 T or A5) are required for each gripper as well as a mounting kit (AS), if listed. Cable extensions (KV) are available as options in the “Accessories” catalog section.

You can find more detailed information and individual parts of the above-mentioned accessories in the “Accessories” catalog section.

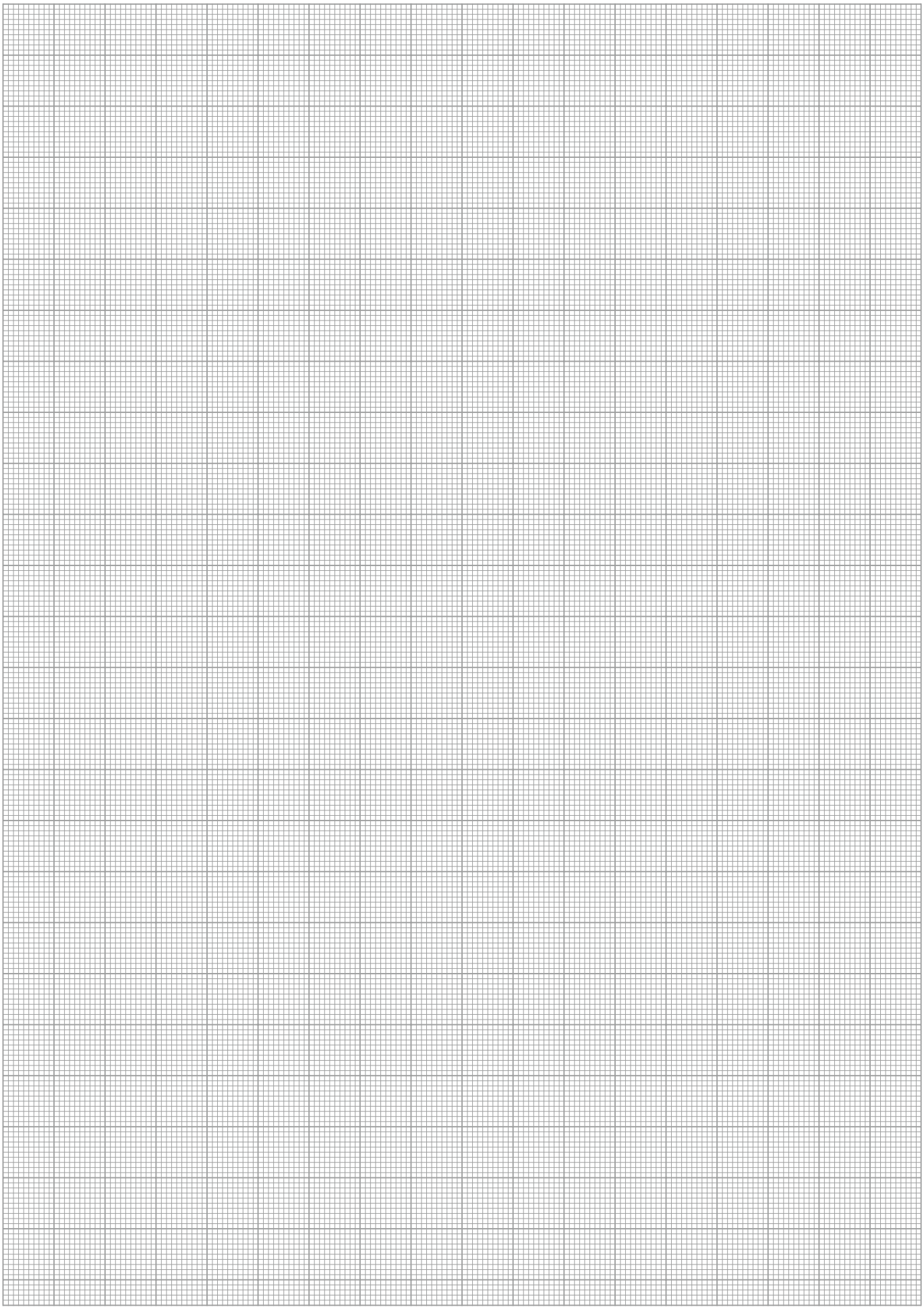

# JGP 100

**Pneumatic • 2-Finger Parallel Gripper • Universal Gripper**



## Gripping force, I.D. gripping

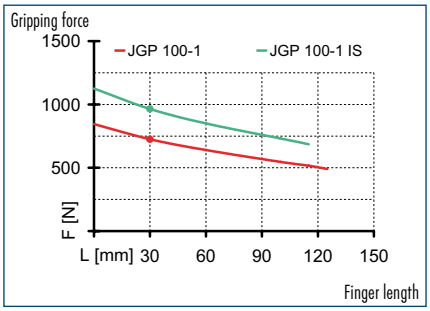


## Gripping force, O.D. gripping

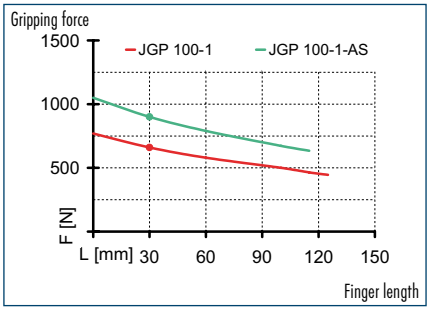


## Finger load

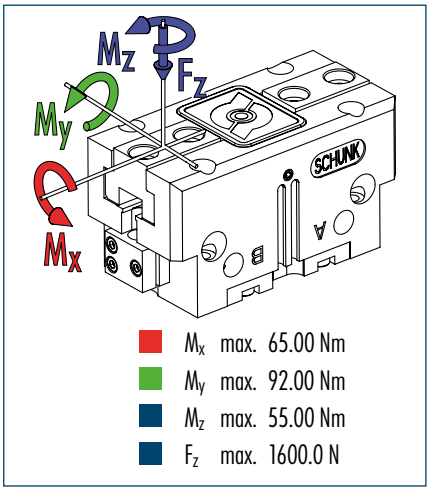


ⓘ The indicated moments and forces are static values, apply per base jaw and may occur simultaneously. $M_y$ may arise in addition to the moment generated by the gripping force itself. If the max. permitted finger weight is exceeded, it is imperative to throttle the air pressure so that the jaw movement occurs without any hitting or bouncing. Service life may be reduced.

## Technical data

| Description | | JGP 100-1 | JGP 100-1-AS | JGP 100-1-IS |
|---|---|---|---|---|
| **ID** | | **0308640** | **0308641** | **0308642** |
| Stroke per finger | [mm] | 10 | 10 | 10 |
| Closing force | [N] | 660 | 900 | |
| Opening force | [N] | 725 | | 965 |
| Min. spring force | [N] | | 240 | 240 |
| Weight | [kg] | 0.81 | 1 | 1 |
| Recommended workpiece weight | [kg] | 3.3 | 3.3 | 3.3 |
| Air consumption per double stroke | [$cm^3$] | 40 | 40 | 40 |
| Min./max. operating pressure | [bar] | 2.5/8 | 4/6.5 | 4/6.5 |
| Nominal operating pressure | [bar] | 6 | 6 | 6 |
| Closing/opening time | [s] | 0.07/0.07 | 0.05/0.09 | 0.09/0.05 |
| Max. permitted finger length | [mm] | 125 | 115 | 115 |
| Max. permitted weight per finger | [kg] | 1.1 | 1.1 | 1.1 |
| IP class | | 40 | 40 | 40 |
| Min./max. ambient temperature | [°C] | -10/90 | -10/90 | -10/90 |
| Repeat accuracy | [mm] | 0.01 | 0.01 | 0.01 |

## Main view

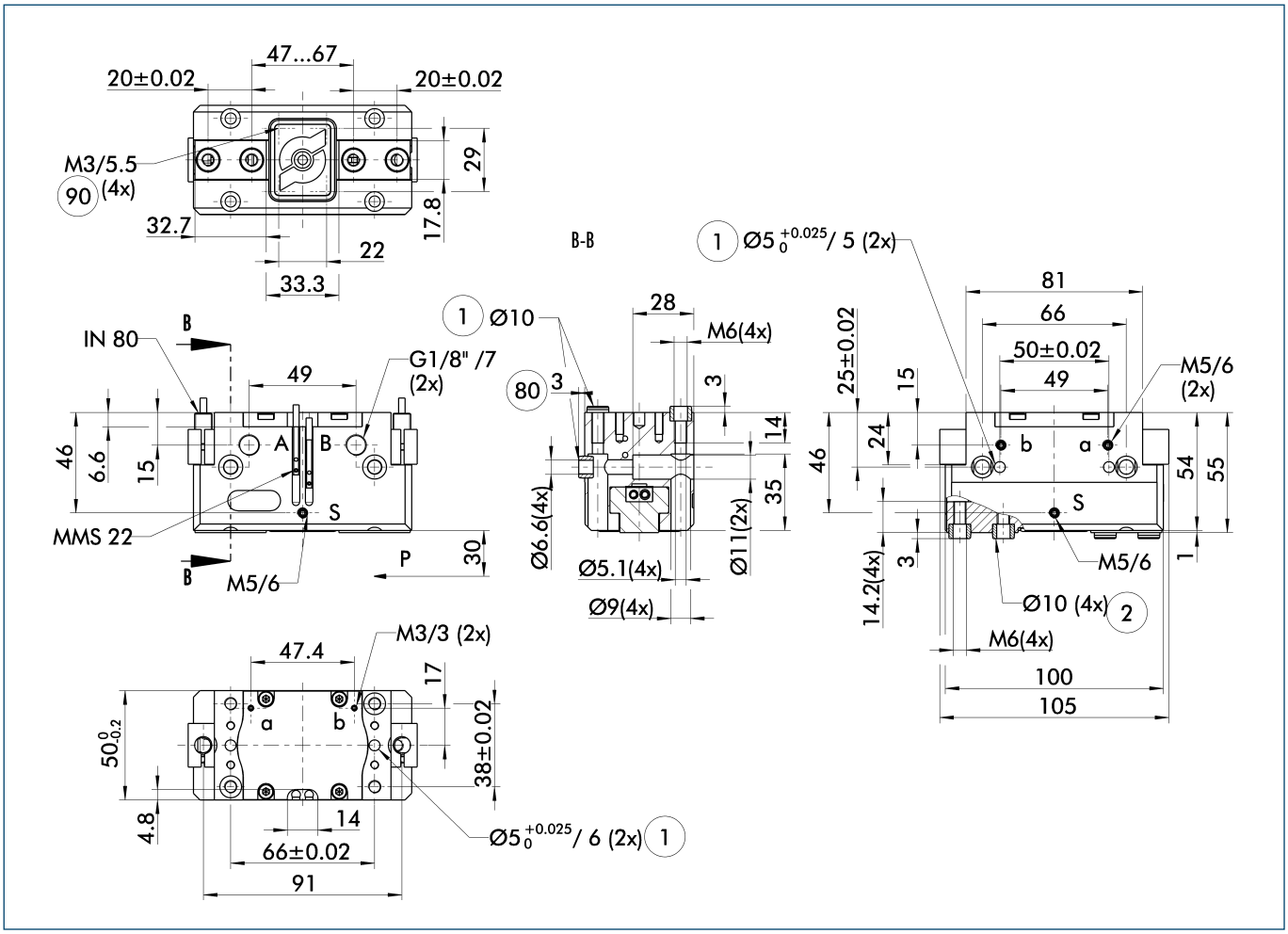


The drawing shows the gripper in the basic version with closed jaws, the dimensions do not include the options described below.

ⓘ The SDV-P pressure maintenance valve can also be used for I.D. or O.D. gripping alternatively or in addition to the spring-loaded, mechanical gripping force maintenance device (see "Accessories" catalog section).

A, a Main/direct connection, gripper opening
B, b Main/direct connection, gripper closing
S Air purge connection
① Gripper connection
② Finger connection
㊽ Depth of the centering sleeve hole in the matching part
㊿ Thread below the cover for fastening external attachments

## Hose-free direct connection

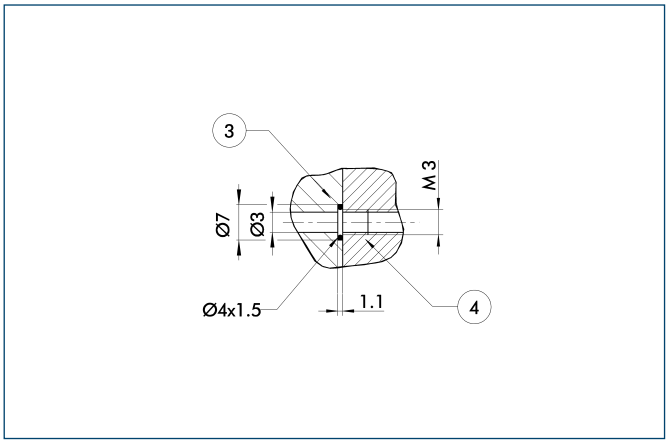


③ Adapter
④ Gripper

The direct connection is used for supplying compressed air without hoses. Instead, the pressure medium is fed through bore-holes in the mounting plate.

## AS/IS gripping force maintenance device

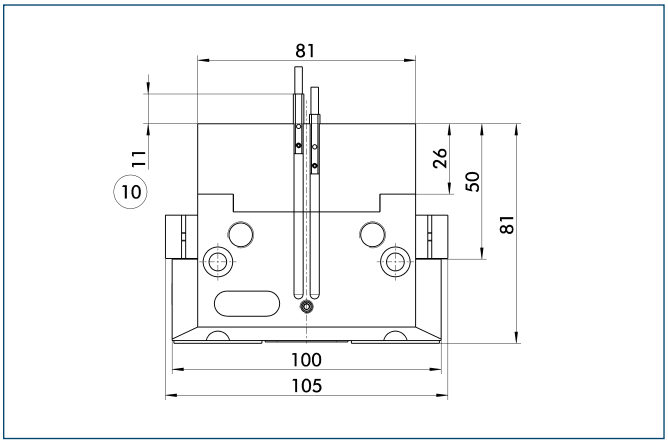


⑩ Projection applies only for AS version

The mechanical gripping force maintenance device ensures a minimum gripping force even in case of pressure drop. This acts as closing force in the AS version, and as opening force in the IS version. In addition, the gripping force maintenance device can also be used for increasing the gripping force or for single-acting gripping.

## Modular Assembly Automation

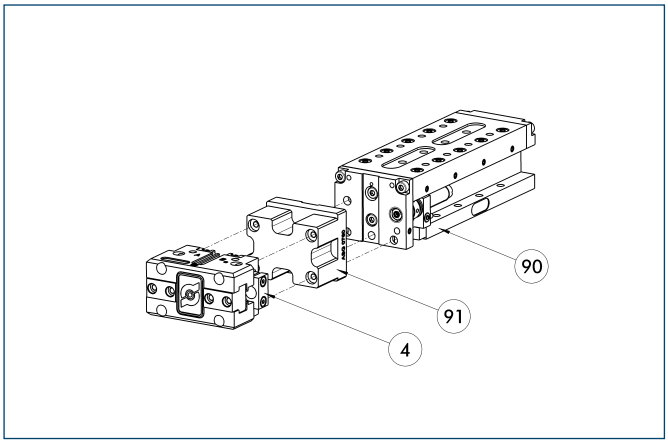


④ Gripper
⑨① ASG
⑨⓪ CLM

This gripper can be combined with the standard linear modules LM, KLM, CLM and ELM of the GEMOTEC modular system. For more information see our main catalog "Modular Assembly Automation".

## Maximum permitted finger projection

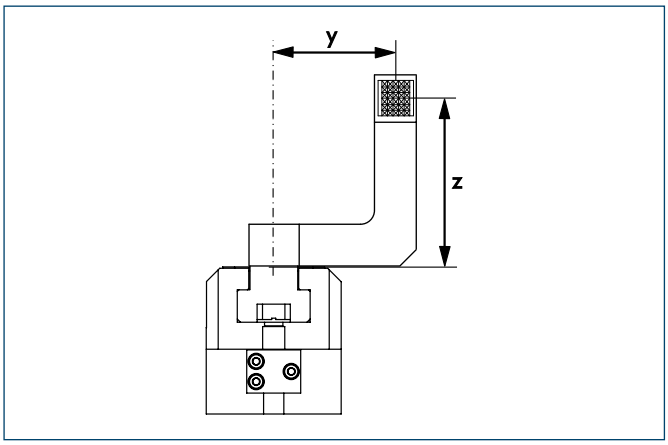


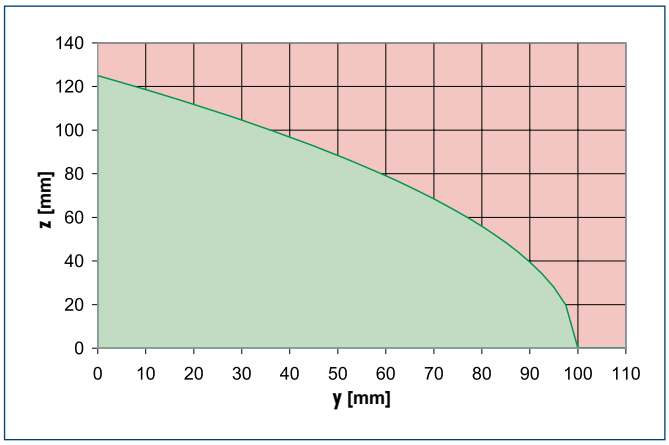


Permitted range
Inadmissible range

The curve applies to the basic version (stroke -1). For other versions, the curve will be parallel but offset in line with the max. permitted finger length.

## Quick-change Jaw System

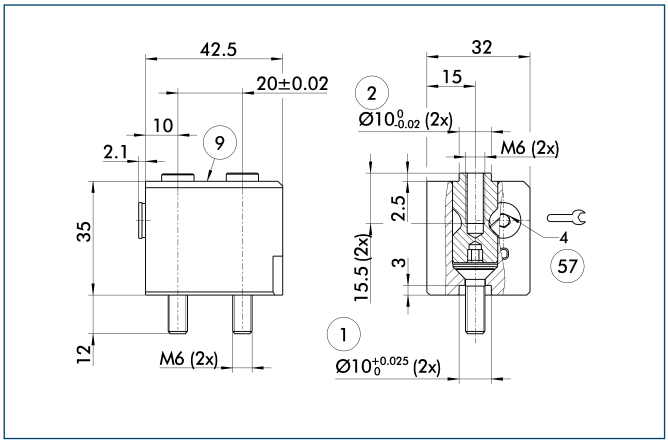


① Gripper connection
② Finger connection
⑨ For mounting screw connection diagram, see basic version
57 Locking

The BSWS quick-change jaw system enables top jaws to be changed on the gripper manually and rapidly. An adapter (BSWS-A) and a base (BSWS-B) are required for each gripper jaw.
For a reverse assembly without height set-up, one adapter (BSWS-A) and a kit (BSWS-U) per gripper jaw are required. Another effect of the BSWS-U is, that there are no disturbing fastening bores in the finger contour.

| Description | ID |
|---|---|
| Quick-change Jaw System adapter | |
| BSWS-A 100 | **0303026** |
| Quick-change Jaw System base | |
| BSWS-B 100 | **0303027** |
| Quick-change Jaw System reversed | |
| BSWS-U 100 | **0303043** |

## Universal intermediate jaw

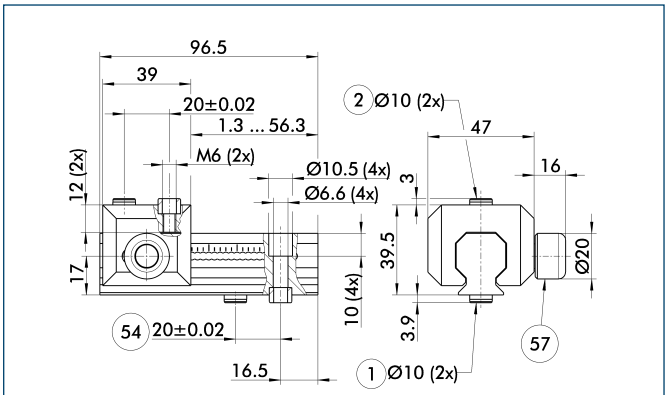


① Gripper connection
② Finger connection
54 Optional right or left connection
57 Locking

The universal intermediate jaw allows fast tool-free and reliable plugging and shifting of top jaws at the gripper.

| Description | ID | Grid dimension |
|---|---|---|
| Universal intermediate jaw | | |
| UZB 100 | **0300044** | 2.5 mm |
| UZB-S 100 | **5518272** | 2.5 mm |

ⓘ The slide UZB-S can be removed completely and has to be ordered separately. Moreover, it allows a fast jaw change.

You can find more detailed information and individual parts of the above-mentioned accessories in the “Accessories” catalog section.

## Force measuring jaws

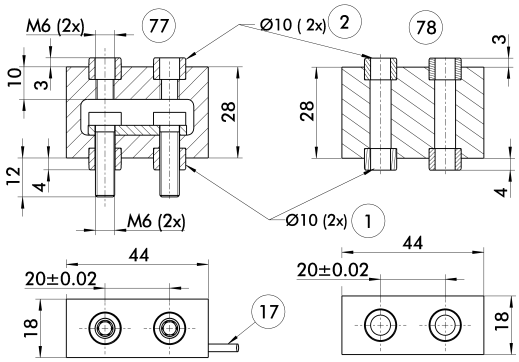


① Gripper connection
② Finger connection
⑰ Cable outlet
⑦⑦ Active intermediate jaws
⑦⑧ Passive intermediate jaws

Force measuring jaws measure gripping forces, but can also determine workpiece weights or dimensional deviations. There are active and passive intermediate jaws (FMS-ZBA or FMS-ZBP). At least one active force measuring jaw is required per gripper, the rest can be passive. For each active jaw, a FMS-A1 control unit and a FMS-A connection cable are required.

| Description | ID |
|---|---|
| Active intermediate jaws | |
| FMS-ZBA 100 | **0301836** |
| Passive intermediate jaws | |
| FMS-ZBP 100 | **0301837** |
| Electronic Processor | |
| FMS-A1 | **0301810** |
| Connection cables | |
| FMS-AK0200 | **0301820** |
| FMS-AK0500 | **0301821** |
| FMS-AK1000 | **0301822** |
| FMS-AK2000 | **0301823** |

## Finger blanks

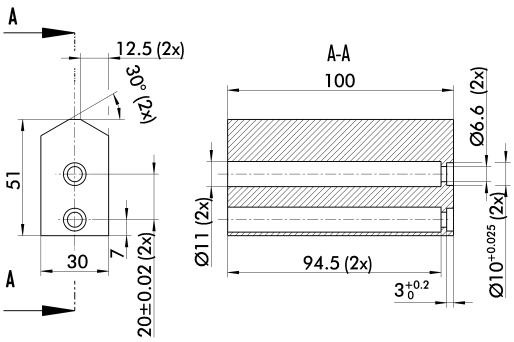


Finger blanks for customized subsequent machining

| Description | ID | Material | Scope of delivery |
|---|---|---|---|
| Finger blanks | | | |
| ABR-plus 100 | **0300012** | Aluminum | 1 |
| SBR-plus 100 | **0300022** | 16 MnCr 5 | 1 |

You can find more detailed information and individual parts of the above-mentioned accessories in the “Accessories” catalog section.

## Tolerance compensation unit

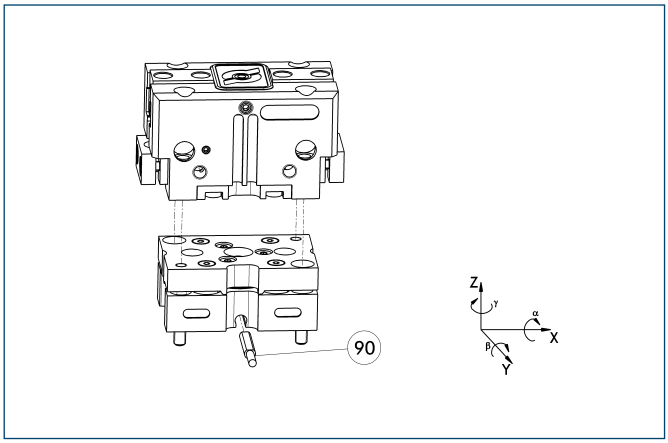


(90) Monitoring of locking

Grippers can be directly mounted without an adapter plate. Tolerance compensation unit and gripper have an identical screw connection diagram. Therefore the tolerance compensation units can be assembled later. Please consider the additional assembly height of the tolerance compensation unit. For details see catalog “Robot Accessories”.

| Description | ID | Locking | Deflection |
|---|---|---|---|
| Compensation unit | | | |
| TCU-100-2-MV-P | **0324808** | Yes | ±1.5°/±1°/±1.2° |
| TCU-100-3-OV-P | **0324811** | No | ±1.5°/±1°/±1.2° |

## Compensation unit with spring reset

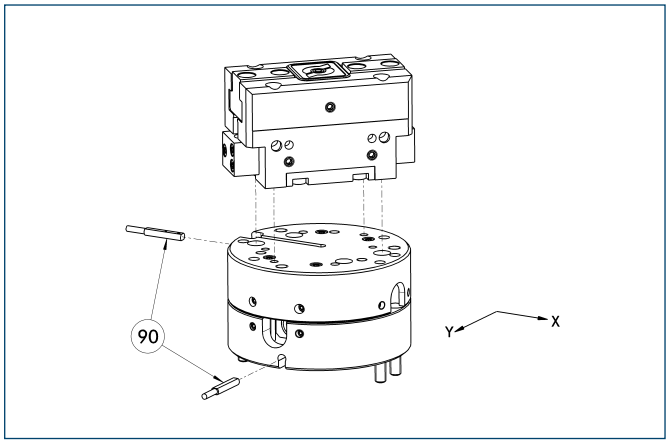


(90) Monitoring

Grippers can be directly mounted without using an adapter plate. For details see our catalog “Robot Accessories”.

| Description | ID | Compensation travel | Reset force |
|---|---|---|---|
| Compensation unit | | | |
| AGE-F-XY-080-1 | **0324960** | ±5 mm | 28.3 N |
| AGE-F-XY-080-2 | **0324961** | ±5 mm | 42.5 N |
| AGE-F-XY-080-3 | **0324962** | ±5 mm | 47.6 N |

## Attachment valves

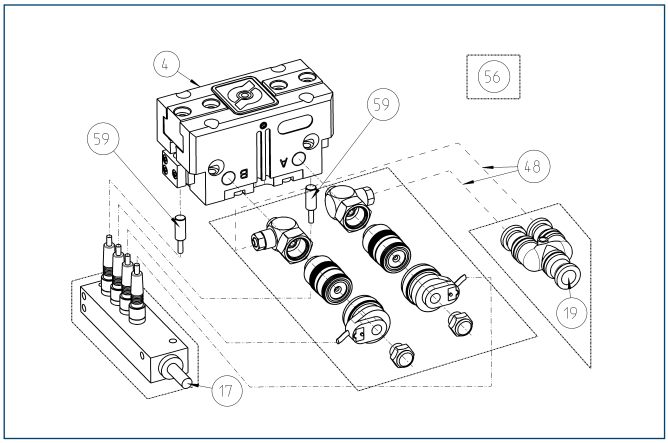


(4) Gripper
(17) Cable outlet
(19) Air connection
(48) Hose
(56) Included in delivery
(59) Monitoring “gripping”

For each gripper one attachment valve ABV is required, optional with distributor for sensors and valves. Attachment valves increase the efficiency, reduce the installation work and air consumption and simplify air supply. For details please refer to the “Accessories” catalog section.

| Description | ID |
|---|---|
| Attachment valves | |
| ABV-MV30-G1/8 | **0303328** |
| ABV-MV30-G1/8-V2-M8 | **0303396** |
| ABV-MV30-G1/8-V4-M8 | **0303366** |
| ABV-MV30-G1/8-V8-M8 | **0303367** |

## Programmable magnetic switch

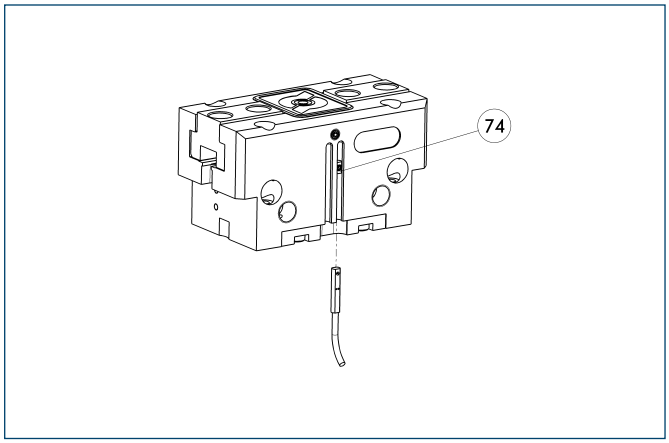


(74) Stop for MMS-P

Position monitoring with two programmable positions per sensor. The end position monitoring is mounted in the C-slot.

| Description | ID | Recommended product |
|---|---|---|
| Programmable magnetic switch | | |
| MMS-P 22-S-M8-PNP | **0301370** | • |
| MMSK-P 22-S-PNP | **0301371** | |
| Connection cables | | |
| KA BG08-L 4P-0500 | **0307767** | |
| KA BG08-L 4P-1000 | **0307768** | |
| KA BW08-L 4P-0500 | **0307765** | |
| KA BW08-L 4P-1000 | **0307766** | |
| Sensor Distributor | | |
| V2-M8-4P-2XM8-3P | **0301380** | |

ⓘ Please note the minimum permitted bending radii for the sensor cables, which are generally 35 mm.
ⓘ Per gripper one sensor (closer/NO) is required, optionally a cable extension.

You can find more detailed information and individual parts of the above-mentioned accessories in the “Accessories” catalog section.

## Electronic magnetic switches

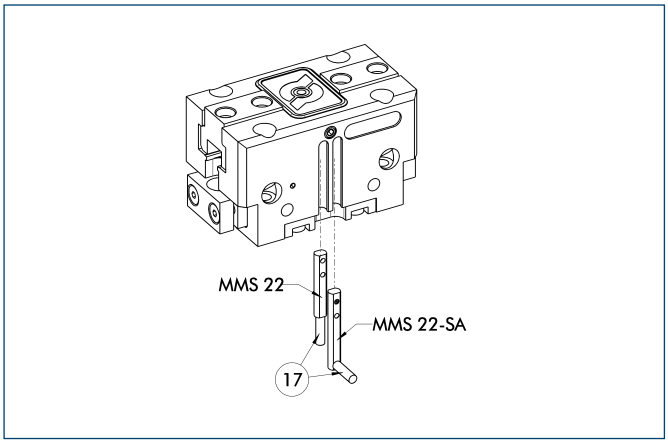


⑰ Cable outlet

End position monitoring for mounting in the C-slot

| Description | ID | Recommended product |
|---|---|---|
| Electronic magnetic switches | | |
| MMS 22-S-M5-PNP | 0301438 | |
| MMS 22-S-M5-NPN | 0301439 | |
| MMS 22-S-M8-PNP | 0301432 | • |
| MMS 22-S-M8-NPN | 0301433 | |
| MMSK 22-S-PNP | 0301434 | |
| MMSK 22-S-NPN | 0301435 | |
| Electronic magnetic switches with lateral cable outlet | | |
| MMS 22-S-M5-PNP-SA | 0301448 | |
| MMS 22-S-M5-NPN-SA | 0301449 | |
| MMS 22-S-M8-PNP-SA | 0301442 | • |
| MMS 22-S-M8-NPN-SA | 0301443 | |
| MMSK 22-S-PNP-SA | 0301444 | |
| MMSK 22-S-NPN-SA | 0301445 | |
| Reed Switches | | |
| RMS 22-S-M8 | 0377720 | • |
| Connection cables | | |
| KA BG05-L 3P-0300 | 0301652 | |
| KA BG08-L 3P-0300-PNP | 0301622 | |
| KA BG08-L 3P-0500-PNP | 0301623 | |
| KA BW05-L 3P-0300 | 0301650 | |
| KA BW08-L 3P-0300-NPN | 0301602 | |
| KA BW08-L 3P-0300-PNP | 0301594 | |
| KA BW08-L 3P-0500-NPN | 9641116 | |
| KA BW08-L 3P-0500-PNP | 0301502 | |
| Cable extensions | | |
| KV BW08-SG08 3P-0030-PNP | 0301495 | |
| KV BW08-SG08 3P-0100-PNP | 0301496 | |
| KV BW08-SG08 3P-0200-PNP | 0301497 | |

ⓘ Two sensors (closer/NO) are required for each gripper, plus extension cables as an option.

ⓘ Please note the minimum permitted bending radii for the sensor cables, which are generally 35 mm.

## Inductive proximity switches

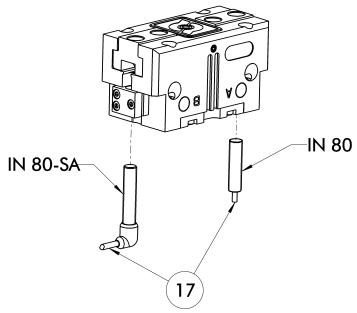


⑰ Cable outlet

End position monitoring for direct mounting

| Description | ID | Recommended product |
|---|---|---|
| Inductive proximity switches | | |
| IN 80-S-M8 | 0301478 | • |
| IN 80-S-M12 | 0301578 | |
| INK 80-S | 0301550 | |
| Inductive proximity switch with lateral outlet | | |
| IN 80-S-M12-SA | 0301587 | |
| IN 80-S-M8-SA | 0301483 | • |
| INK 80-S-SA | 0301566 | |
| Connection cables | | |
| KA BG08-L 3P-0300-PNP | 0301622 | |
| KA BG08-L 3P-0500-PNP | 0301623 | |
| KA BG12-L 3P-0500-PNP | 30016369 | |
| KA BW08-L 3P-0300-PNP | 0301594 | |
| KA BW08-L 3P-0500-PNP | 0301502 | |
| KA BW12-L 3P-0300-PNP | 0301503 | |
| KA BW12-L 3P-0500-PNP | 0301507 | |
| Cable extensions | | |
| KV BG12-SG12 3P-0030-PNP | 0301999 | |
| KV BG12-SG12 3P-0060-PNP | 0301998 | |
| KV BW08-SG08 3P-0030-PNP | 0301495 | |
| KV BW08-SG08 3P-0100-PNP | 0301496 | |
| KV BW08-SG08 3P-0200-PNP | 0301497 | |
| KV BW12-SG12 3P-0030-PNP | 0301595 | |
| KV BW12-SG12 3P-0100-PNP | 0301596 | |
| KV BW12-SG12 3P-0200-PNP | 0301597 | |

ⓘ Two sensors (closer/NO) are required for each gripper, plus extension cables as an option.

ⓘ Please note the minimum permitted bending radii for the sensor cables, which are generally 35 mm.

You can find more detailed information and individual parts of the above-mentioned accessories in the “Accessories” catalog section.

## Cylindrical Reed Switches

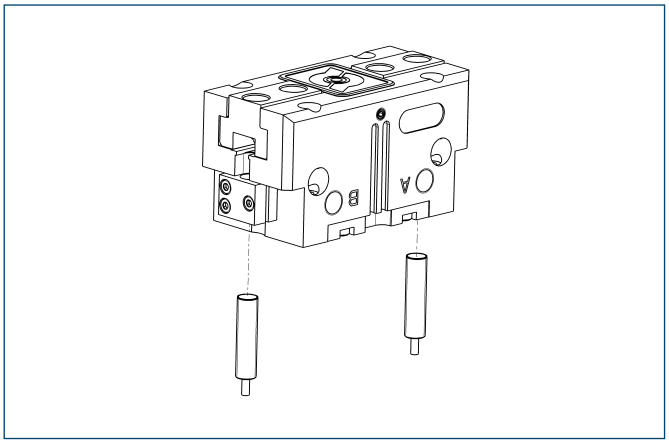

End position monitoring mounted with mounting kit

| Description | ID |
|---|---|
| Mounting kit for proximity switch | |
| AS-RMS 80 PGN/PZN-plus 100/125 | **0377726** |
| Reed Switches | |
| RMS 80-S-M8 | **0377721** |

ⓘ Two sensors (closer/NO) are required for each gripper, plus extension cables as an option.
ⓘ This mounting kit needs to be ordered optionally as an accessory.
ⓘ Please note the minimum permitted bending radii for the sensor cables, which are generally 35 mm.

## Analog position sensor

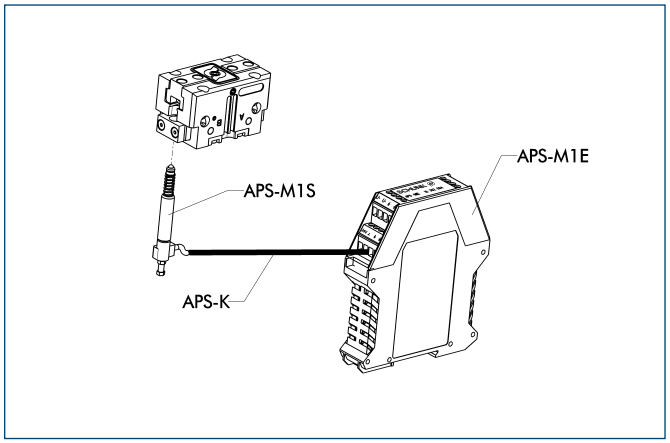


Analog multi position monitoring for any desired positions

| Description | ID |
|---|---|
| Mounting kit | |
| AS-APS-M1-100/1 | **0302079** |
| Connection cables | |
| APS-K0200 | **0302066** |
| APS-K0700 | **0302068** |
| Electronic Processor | |
| APS-M1E | **0302064** |
| Sensor | |
| APS-M1S | **0302062** |

ⓘ When using an APS system, for each gripper a mounting kit (AS-APS), an APS sensor (APS-M 1S, incl. 3 m cable) as well as an electronics (APS-M1e) are required.
ⓘ An extension cable (APS-K) can be connected between the sensor and the electronics as an option. The max. cable length between the sensor and the electronics is 10 m, between the electronics and their control unit (PLC) it is max. 1 m.

You can find more detailed information and individual parts of the above-mentioned accessories in the “Accessories” catalog section.

## Flexible Position Sensor

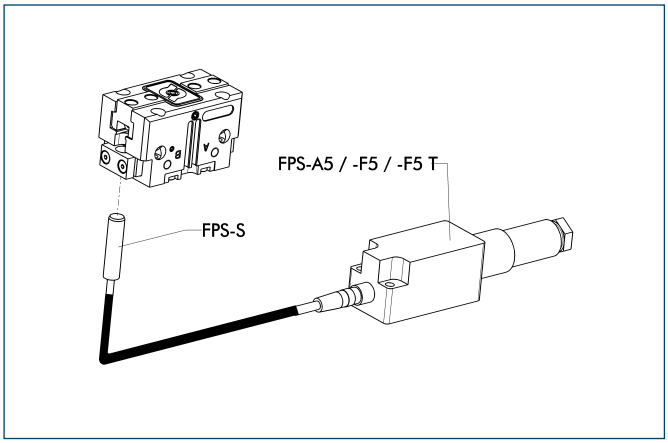


Flexible position monitoring of up to five positions

| Description | ID |
|---|---|
| Mounting kit for FPS | |
| AS-PGN/PZN-plus 100/1 | **0301634** |
| Electronic Processor | |
| FPS-F5 | **0301805** |
| FPS-F5 T | **0301807** |
| Sensor | |
| FPS-S M8 | **0301704** |

ⓘ When using a FPS system, a FPS sensor (FPS-S) and a control unit (FPS-F5 / F5 T or A5) are required for each gripper as well as a mounting kit (AS), if listed. Cable extensions (KV) are available as options in the “Accessories” catalog section.

You can find more detailed information and individual parts of the above-mentioned accessories in the “Accessories” catalog section.

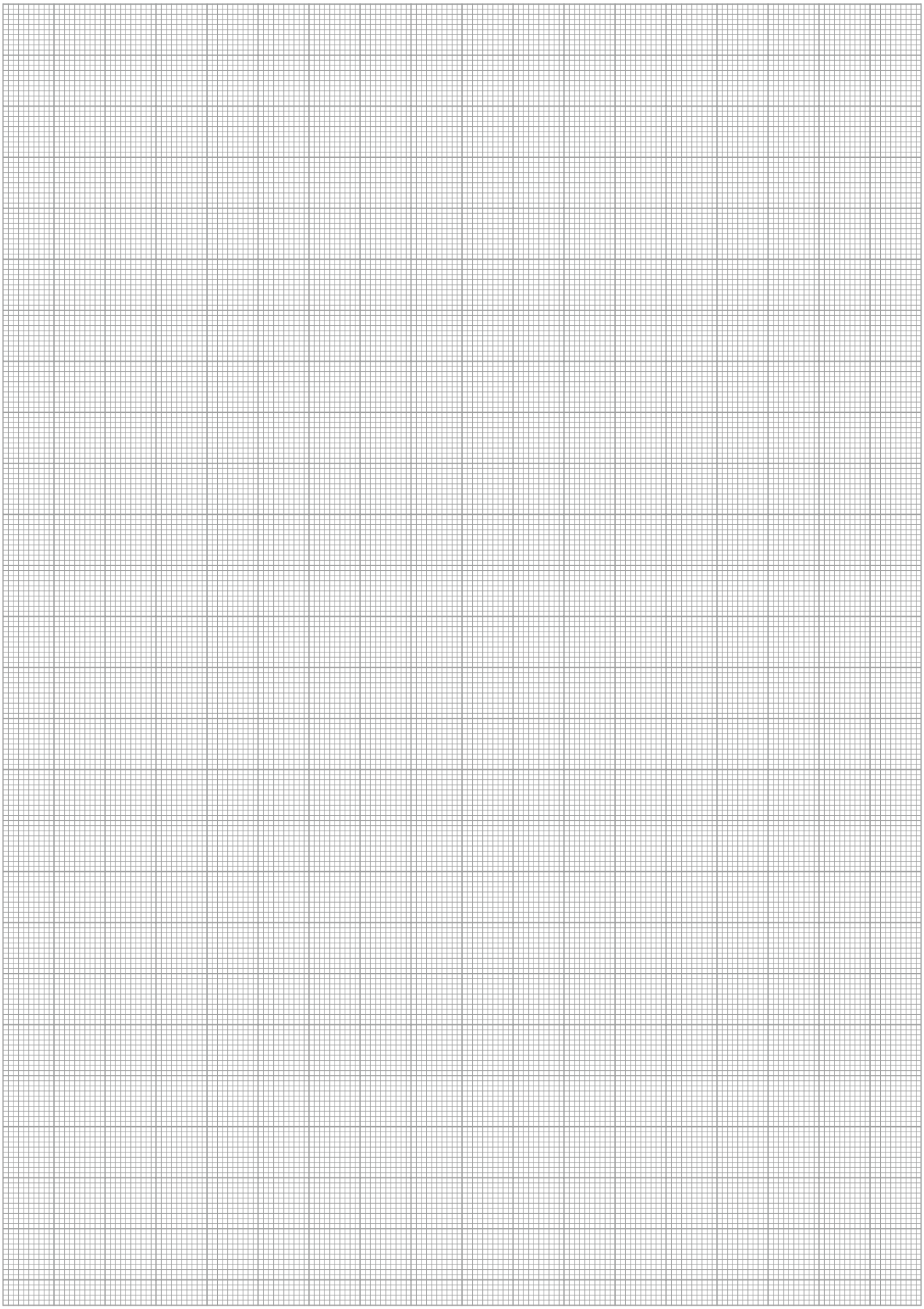

# JGP 125

**Pneumatic • 2-Finger Parallel Gripper • Universal Gripper**



## Gripping force, I.D. gripping

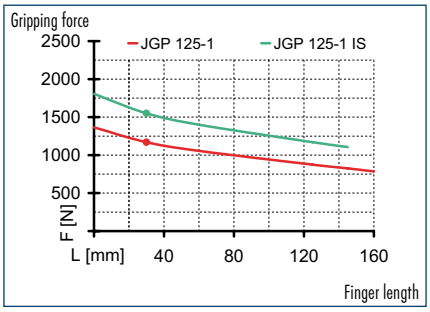


## Gripping force, O.D. gripping

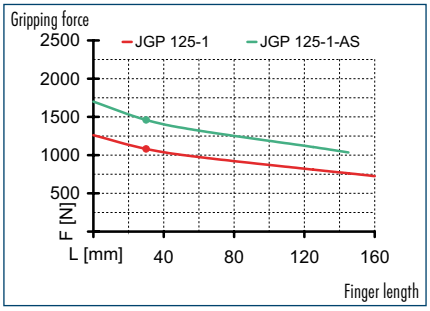


## Finger load

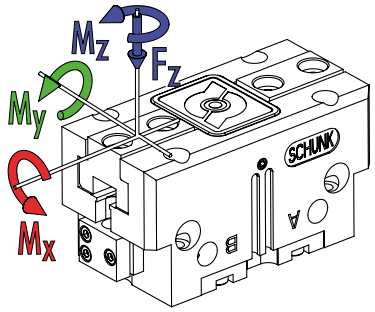


- $M_x$ max. 95.00 Nm
- $M_y$ max. 115.00 Nm
- $M_z$ max. 80.00 Nm
- $F_z$ max. 2240.0 N

ⓘ The indicated moments and forces are static values, apply per base jaw and may occur simultaneously. $M_y$ may arise in addition to the moment generated by the gripping force itself. If the max. permitted finger weight is exceeded, it is imperative to throttle the air pressure so that the jaw movement occurs without any hitting or bouncing. Service life may be reduced.

## Technical data

| Description | | JGP 125-1 | JGP 125-1-AS | JGP 125-1-IS |
|---|---|---|---|---|
| **ID** | | **0308650** | **0308651** | **0308652** |
| Stroke per finger | [mm] | 13 | 13 | 13 |
| Closing force | [N] | 1080 | 1470 | |
| Opening force | [N] | 1170 | | 1560 |
| Min. spring force | [N] | | 390 | 390 |
| Weight | [kg] | 1.35 | 1.85 | 1.85 |
| Recommended workpiece weight | [kg] | 5.4 | 5.4 | 5.4 |
| Air consumption per double stroke | [cm³] | 81 | 81 | 81 |
| Min./max. operating pressure | [bar] | 2.5/8 | 4/6.5 | 4/6.5 |
| Nominal operating pressure | [bar] | 6 | 6 | 6 |
| Closing/opening time | [s] | 0.1/0.1 | 0.08/0.12 | 0.12/0.08 |
| Max. permitted finger length | [mm] | 160 | 145 | 145 |
| Max. permitted weight per finger | [kg] | 2.1 | 2.1 | 2.1 |
| IP class | | 40 | 40 | 40 |
| Min./max. ambient temperature | [°C] | -10/90 | -10/90 | -10/90 |
| Repeat accuracy | [mm] | 0.01 | 0.01 | 0.01 |

## Main view

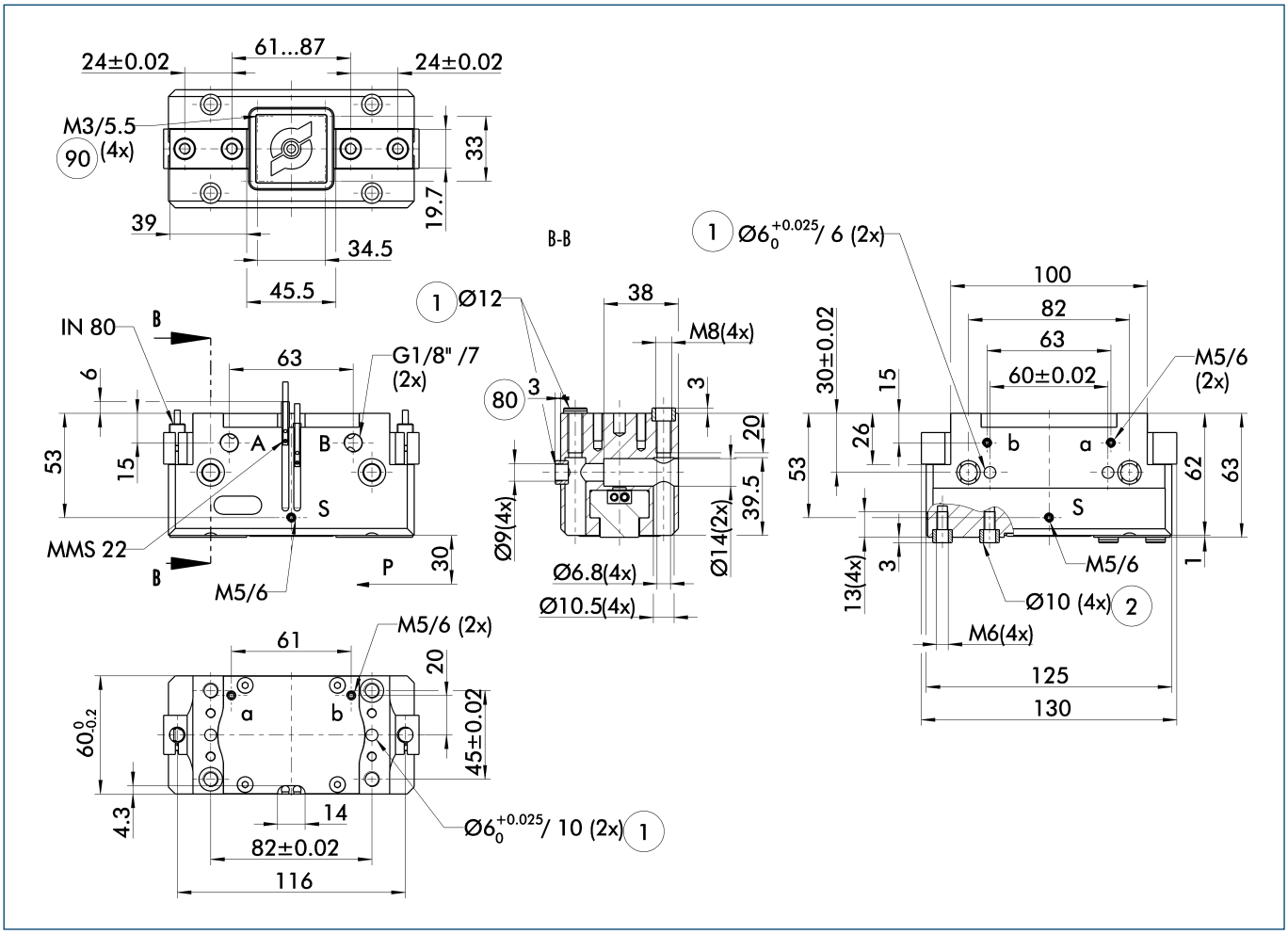


The drawing shows the gripper in the basic version with closed jaws, the dimensions do not include the options described below.

ⓘ The SDV-P pressure maintenance valve can also be used for I.D. or O.D. gripping alternatively or in addition to the spring-loaded, mechanical gripping force maintenance device (see "Accessories" catalog section).

A, a Main/direct connection, gripper opening
B, b Main/direct connection, gripper closing
S Air purge connection
① Gripper connection
② Finger connection
80 Depth of the centering sleeve hole in the matching part
90 Thread below the cover for fastening external attachments

## Hose-free direct connection

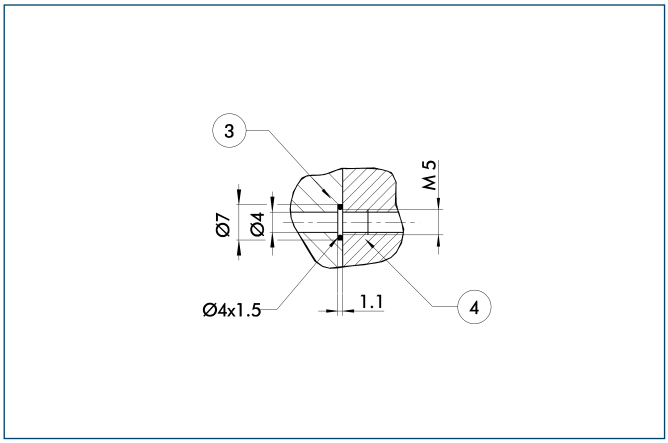


③ Adapter
④ Gripper

The direct connection is used for supplying compressed air without hoses. Instead, the pressure medium is fed through bore-holes in the mounting plate.

## AS/IS gripping force maintenance device

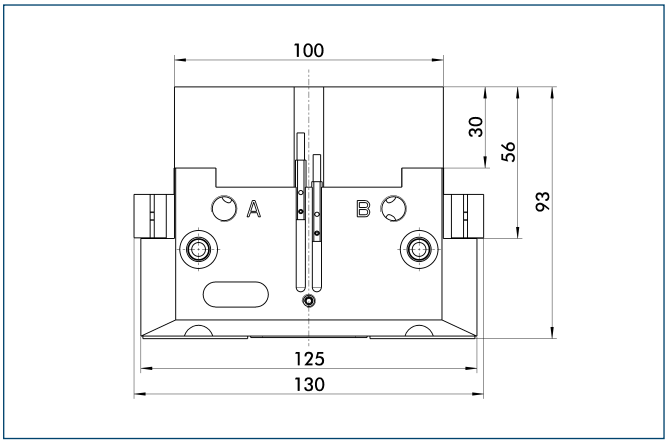


The mechanical gripping force maintenance device ensures a minimum gripping force even in case of pressure drop. This acts as closing force in the AS version, and as opening force in the IS version. In addition, the gripping force maintenance device can also be used for increasing the gripping force or for single-acting gripping.

## Modular Assembly Automation

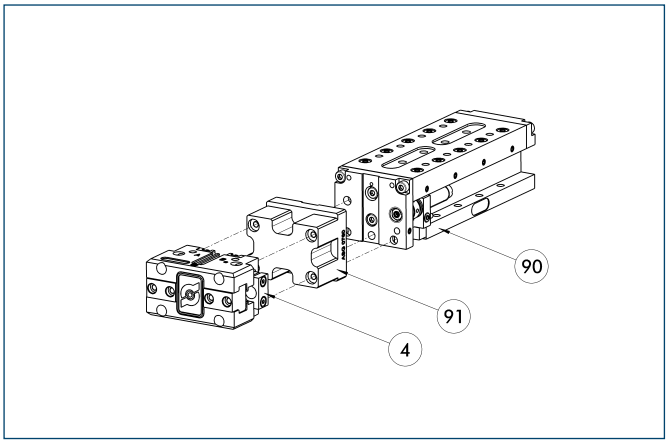


④ Gripper
⑨① ASG
⑨⓪ CLM

This gripper can be combined with the standard linear modules LM, KLM, CLM and ELM of the GEMOTEC modular system. For more information see our main catalog "Modular Assembly Automation".

## Maximum permitted finger projection

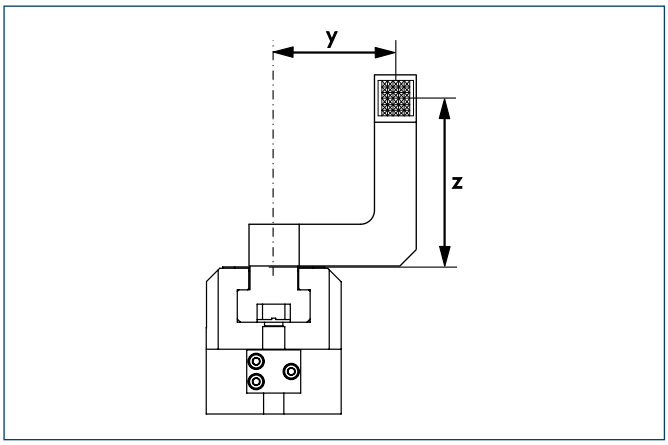


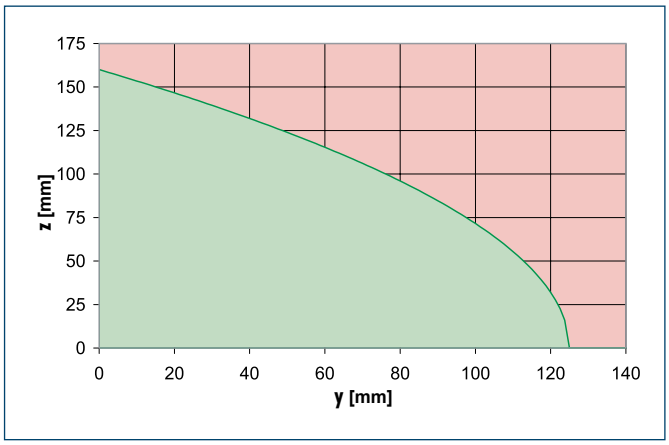


Permitted range
Inadmissible range

The curve applies to the basic version (stroke -1). For other versions, the curve will be parallel but offset in line with the max. permitted finger length.

## Quick-change Jaw System

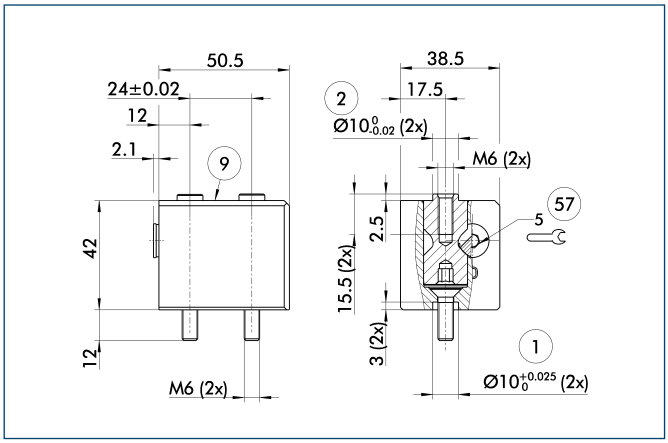


① Gripper connection
② Finger connection
⑨ For mounting screw connection diagram, see basic version
57 Locking

The BSWS quick-change jaw system enables top jaws to be changed on the gripper manually and rapidly. An adapter (BSWS-A) and a base (BSWS-B) are required for each gripper jaw.
For a reverse assembly without height set-up, one adapter (BSWS-A) and a kit (BSWS-U) per gripper jaw are required. Another effect of the BSWS-U is, that there are no disturbing fastening bores in the finger contour.

| Description | ID |
|---|---|
| Quick-change Jaw System adapter | |
| BSWS-A 125 | **0303028** |
| Quick-change Jaw System base | |
| BSWS-B 125 | **0303029** |
| Quick-change Jaw System reversed | |
| BSWS-U 125 | **0303044** |

## Universal intermediate jaw

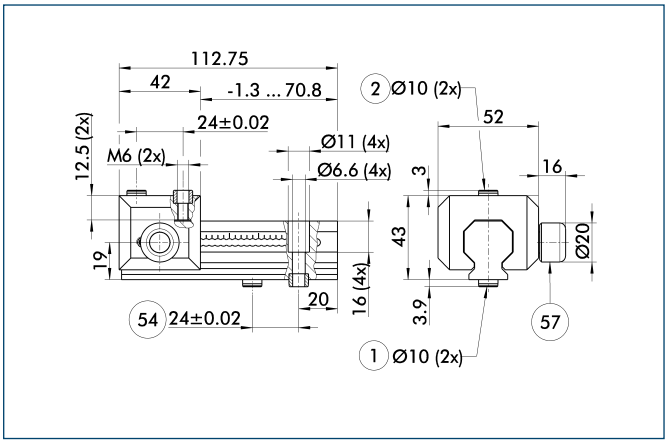


① Gripper connection
② Finger connection
54 Optional right or left connection
57 Locking

The universal intermediate jaw allows fast tool-free and reliable plugging and shifting of top jaws at the gripper.

| Description | ID | Grid dimension |
|---|---|---|
| Universal intermediate jaw | | |
| UZB 125 | **0300045** | 3 mm |
| UZB-S 125 | **5518273** | 3 mm |

ⓘ The slide UZB-S can be removed completely and has to be ordered separately. Moreover, it allows a fast jaw change.

You can find more detailed information and individual parts of the above-mentioned accessories in the “Accessories” catalog section.

## Force measuring jaws

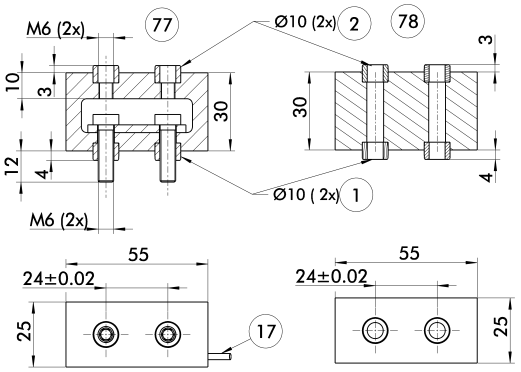


① Gripper connection
② Finger connection
⑰ Cable outlet
⑦⑦ Active intermediate jaws
⑦⑧ Passive intermediate jaws

Force measuring jaws measure gripping forces, but can also determine workpiece weights or dimensional deviations. There are active and passive intermediate jaws (FMS-ZBA or FMS-ZBP). At least one active force measuring jaw is required per gripper, the rest can be passive. For each active jaw, a FMS-A1 control unit and a FMS-A connection cable are required.

| Description | ID |
|---|---|
| Active intermediate jaws | |
| FMS-ZBA 125 | **0301838** |
| Passive intermediate jaws | |
| FMS-ZBP 125 | **0301839** |
| Electronic Processor | |
| FMS-A1 | **0301810** |
| Connection cables | |
| FMS-AK0200 | **0301820** |
| FMS-AK0500 | **0301821** |
| FMS-AK1000 | **0301822** |
| FMS-AK2000 | **0301823** |

## Finger blanks

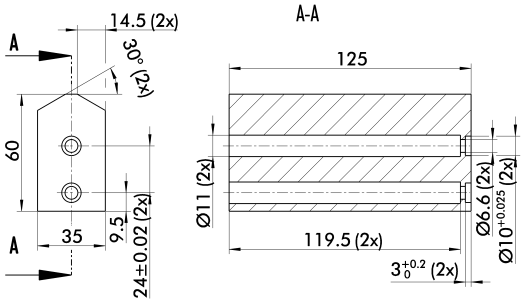


Finger blanks for customized subsequent machining

| Description | ID | Material | Scope of delivery |
|---|---|---|---|
| Finger blanks | | | |
| ABR-plus 125 | **0300013** | Aluminum | 1 |
| SBR-plus 125 | **0300023** | 16 MnCr 5 | 1 |

You can find more detailed information and individual parts of the above-mentioned accessories in the “Accessories” catalog section.

## Tolerance compensation unit

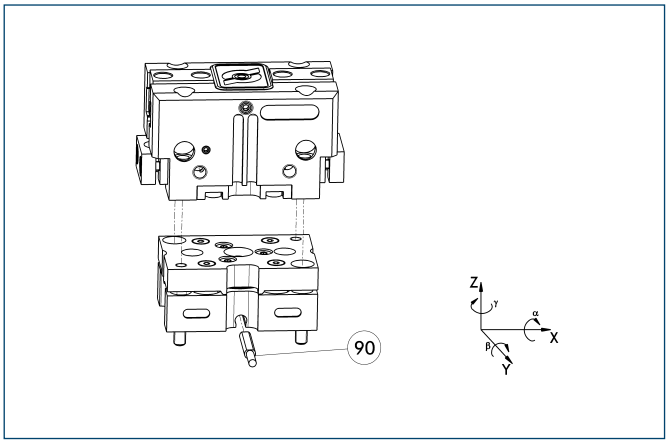


(90) Monitoring of locking

Grippers can be directly mounted without an adapter plate. Tolerance compensation unit and gripper have an identical screw connection diagram. Therefore the tolerance compensation units can be assembled later. Please consider the additional assembly height of the tolerance compensation unit. For details see catalog “Robot Accessories”.

| Description | ID | Locking | Deflection |
|---|---|---|---|
| Compensation unit | | | |
| TCU-125-3-MV-P | **0324828** | Yes | ±1.5°/±1°/±1.5° |
| TCU-125-3-OV-P | **0324829** | No | ±1.5°/±1°/±1.5° |

## Compensation unit with spring reset

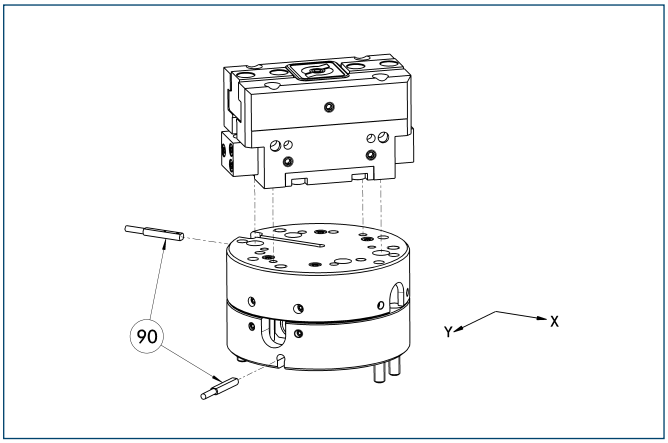


(90) Monitoring

Grippers can be directly mounted without using an adapter plate. For details see our catalog “Robot Accessories”.

| Description | ID | Compensation travel | Reset force |
|---|---|---|---|
| Compensation unit | | | |
| AGE-F-XY-080-1 | **0324960** | ±5 mm | 28.3 N |
| AGE-F-XY-080-2 | **0324961** | ±5 mm | 42.5 N |
| AGE-F-XY-080-3 | **0324962** | ±5 mm | 47.6 N |

## Attachment valves

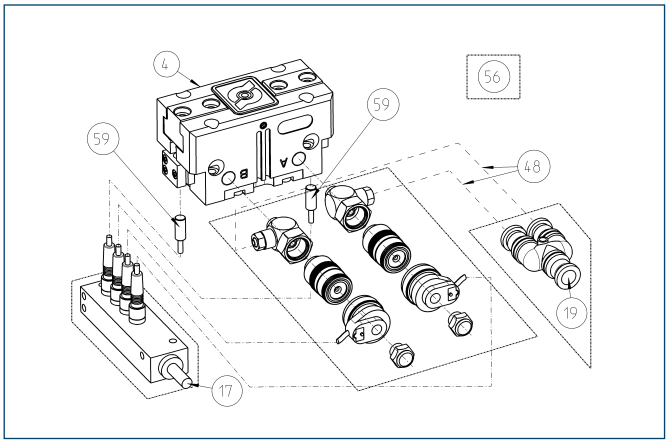


(4) Gripper
(17) Cable outlet
(19) Air connection
(48) Hose
(56) Included in delivery
(59) Monitoring “gripping”

For each gripper one attachment valve ABV is required, optional with distributor for sensors and valves. Attachment valves increase the efficiency, reduce the installation work and air consumption and simplify air supply. For details please refer to the “Accessories” catalog section.

| Description | ID |
|---|---|
| Attachment valves | |
| ABV-MV30-G1/8 | **0303328** |
| ABV-MV30-G1/8-V2-M8 | **0303396** |
| ABV-MV30-G1/8-V4-M8 | **0303366** |
| ABV-MV30-G1/8-V8-M8 | **0303367** |

## Programmable magnetic switch

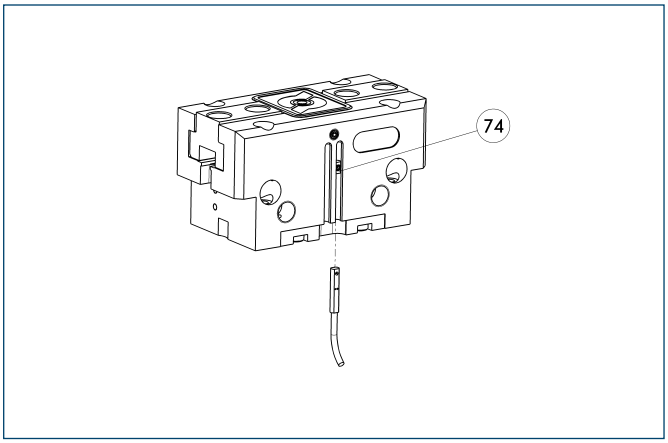


(74) Stop for MMS-P

Position monitoring with two programmable positions per sensor. The end position monitoring is mounted in the C-slot.

| Description | ID | Recommended product |
|---|---|---|
| Programmable magnetic switch | | |
| MMS-P 22-S-M8-PNP | **0301370** | • |
| MMSK-P 22-S-PNP | **0301371** | |
| Connection cables | | |
| KA BG08-L 4P-0500 | **0307767** | |
| KA BG08-L 4P-1000 | **0307768** | |
| KA BW08-L 4P-0500 | **0307765** | |
| KA BW08-L 4P-1000 | **0307766** | |
| Sensor Distributor | | |
| V2-M8-4P-2XM8-3P | **0301380** | |

ⓘ Please note the minimum permitted bending radii for the sensor cables, which are generally 35 mm.
ⓘ Per gripper one sensor (closer/NO) is required, optionally a cable extension.

You can find more detailed information and individual parts of the above-mentioned accessories in the “Accessories” catalog section.

## Electronic magnetic switches

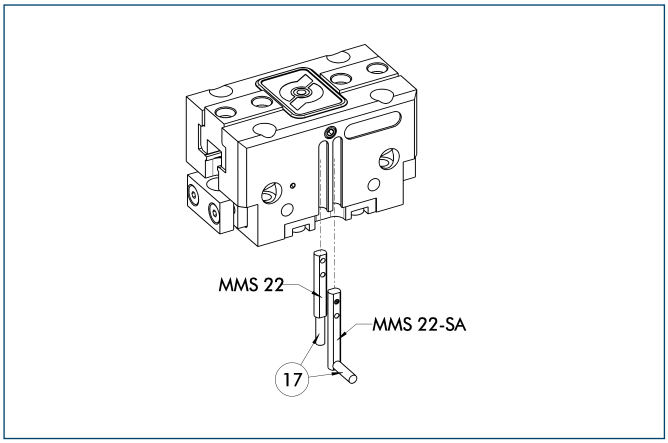


⑰ Cable outlet

End position monitoring for mounting in the C-slot

| Description | ID | Recommended product |
|---|---|---|
| Electronic magnetic switches | | |
| MMS 22-S-M5-PNP | 0301438 | |
| MMS 22-S-M5-NPN | 0301439 | |
| MMS 22-S-M8-PNP | 0301432 | • |
| MMS 22-S-M8-NPN | 0301433 | |
| MMSK 22-S-PNP | 0301434 | |
| MMSK 22-S-NPN | 0301435 | |
| Electronic magnetic switches with lateral cable outlet | | |
| MMS 22-S-M5-PNP-SA | 0301448 | |
| MMS 22-S-M5-NPN-SA | 0301449 | |
| MMS 22-S-M8-PNP-SA | 0301442 | • |
| MMS 22-S-M8-NPN-SA | 0301443 | |
| MMSK 22-S-PNP-SA | 0301444 | |
| MMSK 22-S-NPN-SA | 0301445 | |
| Reed Switches | | |
| RMS 22-S-M8 | 0377720 | • |
| Connection cables | | |
| KA BG05-L 3P-0300 | 0301652 | |
| KA BG08-L 3P-0300-PNP | 0301622 | |
| KA BG08-L 3P-0500-PNP | 0301623 | |
| KA BW05-L 3P-0300 | 0301650 | |
| KA BW08-L 3P-0300-NPN | 0301602 | |
| KA BW08-L 3P-0300-PNP | 0301594 | |
| KA BW08-L 3P-0500-NPN | 9641116 | |
| KA BW08-L 3P-0500-PNP | 0301502 | |
| Cable extensions | | |
| KV BW08-SG08 3P-0030-PNP | 0301495 | |
| KV BW08-SG08 3P-0100-PNP | 0301496 | |
| KV BW08-SG08 3P-0200-PNP | 0301497 | |

ⓘ Two sensors (closer/NO) are required for each gripper, plus extension cables as an option.

ⓘ Please note the minimum permitted bending radii for the sensor cables, which are generally 35 mm.

## Inductive proximity switches

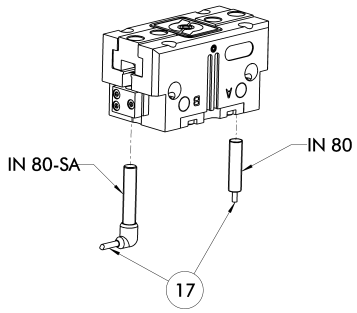


⑰ Cable outlet

End position monitoring for direct mounting

| Description | ID | Recommended product |
|---|---|---|
| Inductive proximity switches | | |
| IN 80-S-M8 | 0301478 | • |
| IN 80-S-M12 | 0301578 | |
| INK 80-S | 0301550 | |
| Inductive proximity switch with lateral outlet | | |
| IN 80-S-M12-SA | 0301587 | |
| IN 80-S-M8-SA | 0301483 | • |
| INK 80-S-SA | 0301566 | |
| Connection cables | | |
| KA BG08-L 3P-0300-PNP | 0301622 | |
| KA BG08-L 3P-0500-PNP | 0301623 | |
| KA BG12-L 3P-0500-PNP | 30016369 | |
| KA BW08-L 3P-0300-PNP | 0301594 | |
| KA BW08-L 3P-0500-PNP | 0301502 | |
| KA BW12-L 3P-0300-PNP | 0301503 | |
| KA BW12-L 3P-0500-PNP | 0301507 | |
| Cable extensions | | |
| KV BG12-SG12 3P-0030-PNP | 0301999 | |
| KV BG12-SG12 3P-0060-PNP | 0301998 | |
| KV BW08-SG08 3P-0030-PNP | 0301495 | |
| KV BW08-SG08 3P-0100-PNP | 0301496 | |
| KV BW08-SG08 3P-0200-PNP | 0301497 | |
| KV BW12-SG12 3P-0030-PNP | 0301595 | |
| KV BW12-SG12 3P-0100-PNP | 0301596 | |
| KV BW12-SG12 3P-0200-PNP | 0301597 | |

ⓘ Two sensors (closer/NO) are required for each gripper, plus extension cables as an option.

ⓘ Please note the minimum permitted bending radii for the sensor cables, which are generally 35 mm.

You can find more detailed information and individual parts of the above-mentioned accessories in the “Accessories” catalog section.

## Cylindrical Reed Switches

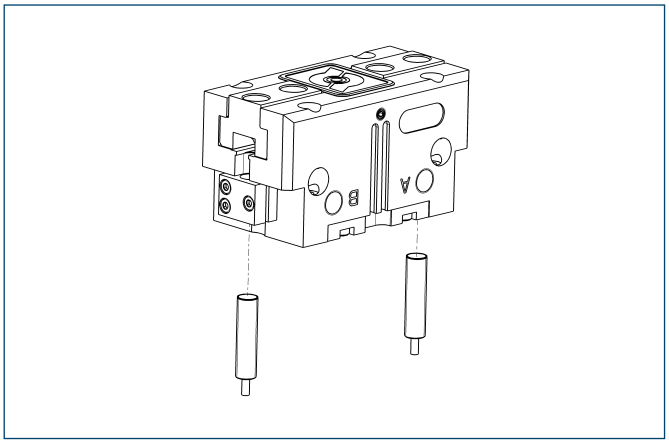

End position monitoring mounted with mounting kit

| Description | ID |
|---|---|
| Mounting kit for proximity switch | |
| AS-RMS 80 PGN/PZN-plus 100/125 | **0377726** |
| Reed Switches | |
| RMS 80-S-M8 | **0377721** |

ⓘ Two sensors (closer/NO) are required for each gripper, plus extension cables as an option.
ⓘ This mounting kit needs to be ordered optionally as an accessory.
ⓘ Please note the minimum permitted bending radii for the sensor cables, which are generally 35 mm.

## Analog position sensor

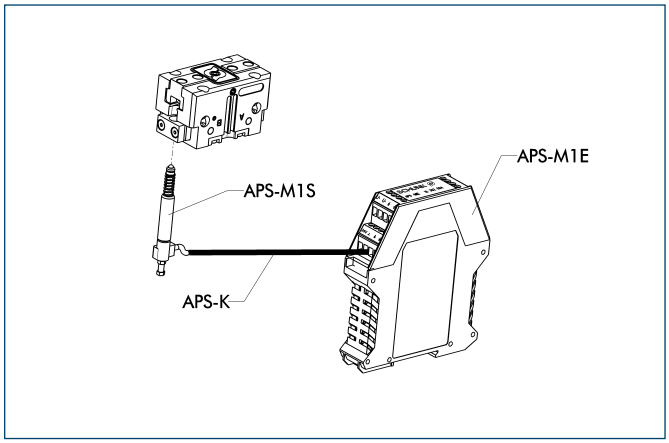


Analog multi position monitoring for any desired positions

| Description | ID |
|---|---|
| Mounting kit | |
| AS-APS-M1-125/1 | **0302081** |
| Connection cables | |
| APS-K0200 | **0302066** |
| APS-K0700 | **0302068** |
| Electronic Processor | |
| APS-M1E | **0302064** |
| Sensor | |
| APS-M1S | **0302062** |

ⓘ When using an APS system, for each gripper a mounting kit (AS-APS), an APS sensor (APS-M 1S, incl. 3 m cable) as well as an electronics (APS-M1e) are required.
ⓘ An extension cable (APS-K) can be connected between the sensor and the electronics as an option. The max. cable length between the sensor and the electronics is 10 m, between the electronics and their control unit (PLC) it is max. 1 m.

You can find more detailed information and individual parts of the above-mentioned accessories in the “Accessories” catalog section.

## Flexible Position Sensor

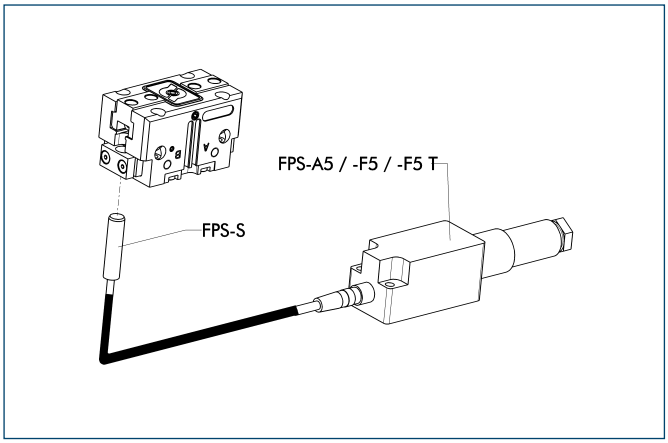


Flexible position monitoring of up to five positions

| Description | ID |
|---|---|
| Mounting kit for FPS | |
| AS-PGN/PZN-plus 125/1, PZB 160 | **0301636** |
| Electronic Processor | |
| FPS-F5 | **0301805** |
| FPS-F5 T | **0301807** |
| Sensor | |
| FPS-S M8 | **0301704** |

ⓘ When using a FPS system, a FPS sensor (FPS-S) and a control unit (FPS-F5 / F5 T or A5) are required for each gripper as well as a mounting kit (AS), if listed. Cable extensions (KV) are available as options in the “Accessories” catalog section.

You can find more detailed information and individual parts of the above-mentioned accessories in the “Accessories” catalog section.

# JGP 160

**Pneumatic • 2-Finger Parallel Gripper • Universal Gripper**



## Gripping force, I.D. gripping

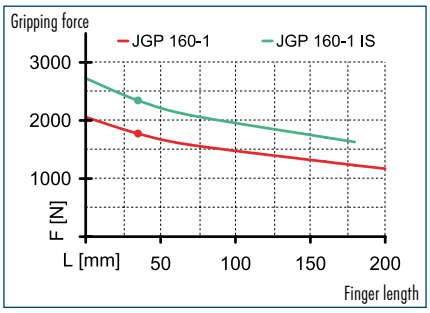


## Gripping force, O.D. gripping

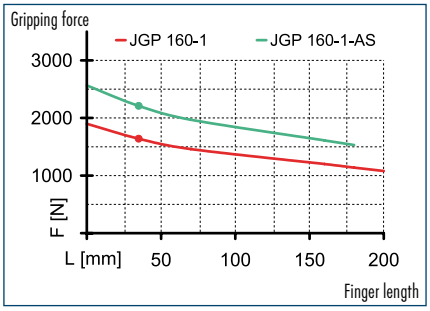


## Finger load

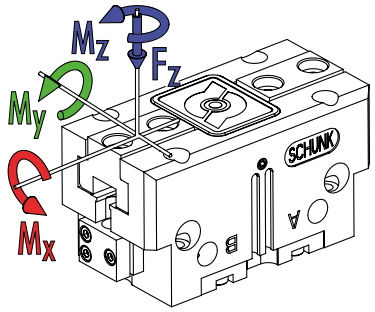


- $M_x$ max. 136.00 Nm
- $M_y$ max. 145.00 Nm
- $M_z$ max. 105.00 Nm
- $F_z$ max. 3440.0 N

ⓘ The indicated moments and forces are static values, apply per base jaw and may occur simultaneously. $M_y$ may arise in addition to the moment generated by the gripping force itself. If the max. permitted finger weight is exceeded, it is imperative to throttle the air pressure so that the jaw movement occurs without any hitting or bouncing. Service life may be reduced.

## Technical data

| Description | | JGP 160-1 | JGP 160-1-AS | JGP 160-1-IS |
|---|---|---|---|---|
| **ID** | | **0308660** | **0308661** | **0308662** |
| Stroke per finger | [mm] | 16 | 16 | 16 |
| Closing force | [N] | 1640 | 2210 | |
| Opening force | [N] | 1770 | | 2340 |
| Min. spring force | [N] | | 570 | 570 |
| Weight | [kg] | 2.6 | 3.3 | 3.3 |
| Recommended workpiece weight | [kg] | 8.2 | 8.2 | 8.2 |
| Air consumption per double stroke | [cm³] | 157 | 157 | 157 |
| Min./max. operating pressure | [bar] | 2.5/8 | 4/6.5 | 4/6.5 |
| Nominal operating pressure | [bar] | 6 | 6 | 6 |
| Closing/opening time | [s] | 0.15/0.15 | 0.12/0.25 | 0.25/0.12 |
| Max. permitted finger length | [mm] | 200 | 180 | 180 |
| Max. permitted weight per finger | [kg] | 3.5 | 3.5 | 3.5 |
| IP class | | 40 | 40 | 40 |
| Min./max. ambient temperature | [°C] | -10/90 | -10/90 | -10/90 |
| Repeat accuracy | [mm] | 0.01 | 0.01 | 0.01 |

## Main view

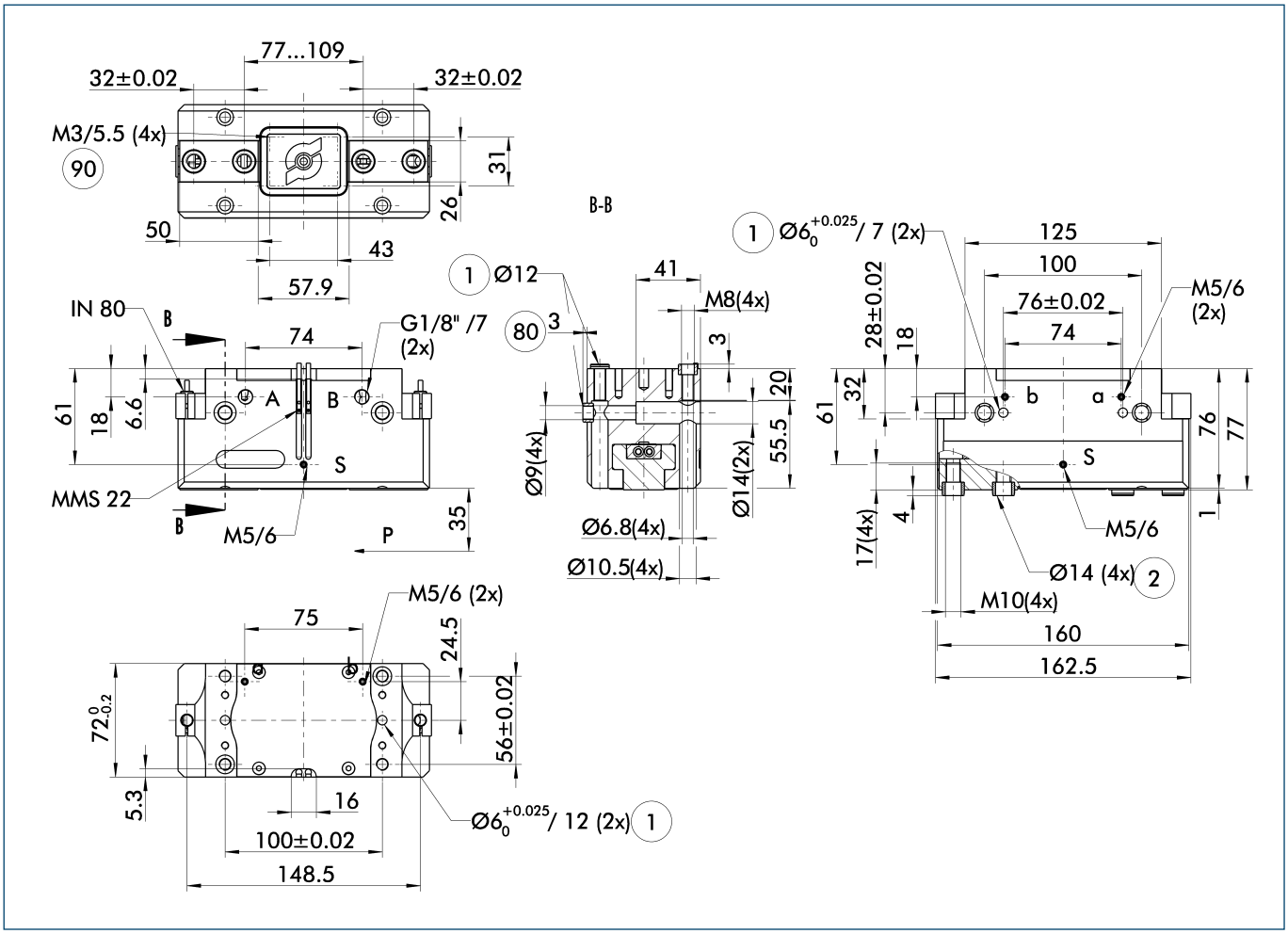


The drawing shows the gripper in the basic version with closed jaws, the dimensions do not include the options described below.

ⓘ The SDV-P pressure maintenance valve can also be used for I.D. or O.D. gripping alternatively or in addition to the spring-loaded, mechanical gripping force maintenance device (see "Accessories" catalog section).

A, a Main/direct connection, gripper opening
B, b Main/direct connection, gripper closing
S Air purge connection
① Gripper connection
② Finger connection
⑧⓪ Depth of the centering sleeve hole in the matching part
⑨⓪ Thread below the cover for fastening external attachments

## Hose-free direct connection

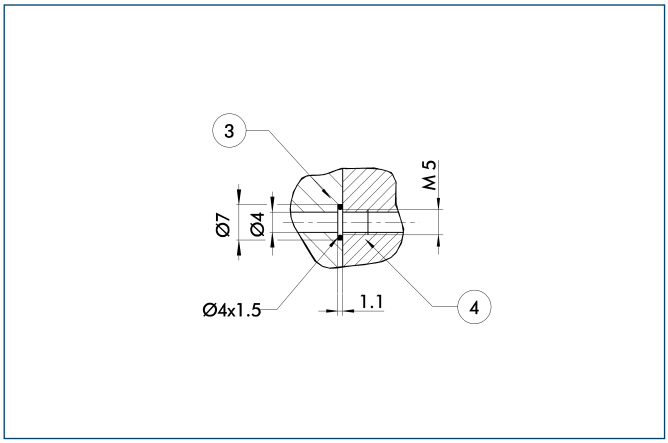


③ Adapter
④ Gripper

The direct connection is used for supplying compressed air without hoses. Instead, the pressure medium is fed through bore-holes in the mounting plate.

## AS/IS gripping force maintenance device

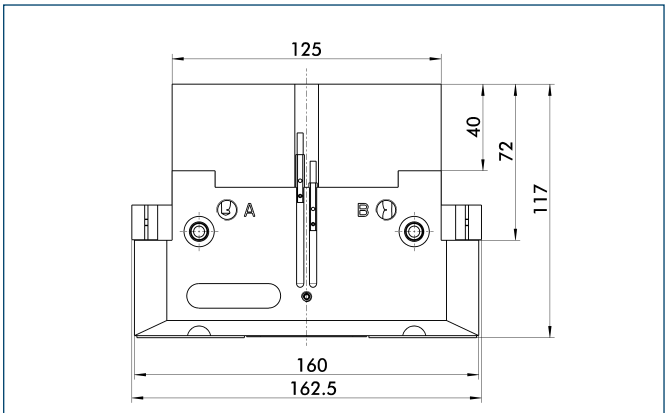


The mechanical gripping force maintenance device ensures a minimum gripping force even in case of pressure drop. This acts as closing force in the AS version, and as opening force in the IS version. In addition, the gripping force maintenance device can also be used for increasing the gripping force or for single-acting gripping.

## Maximum permitted finger projection

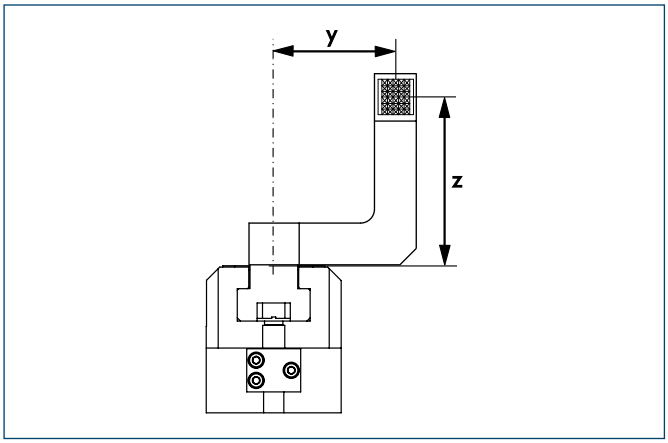


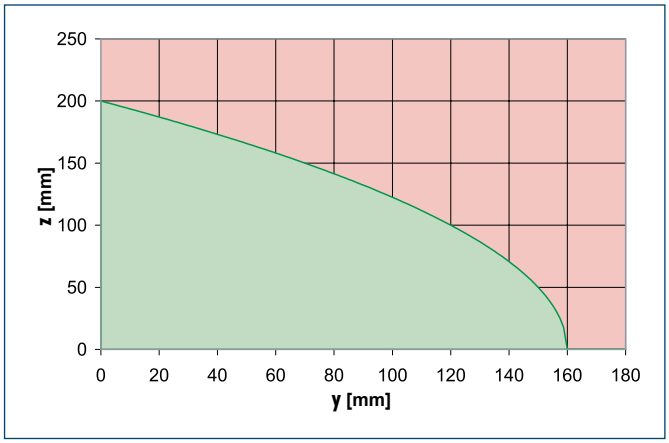


Permitted range
Inadmissible range

The curve applies to the basic version (stroke -1). For other versions, the curve will be parallel but offset in line with the max. permitted finger length.

## Quick-change Jaw System

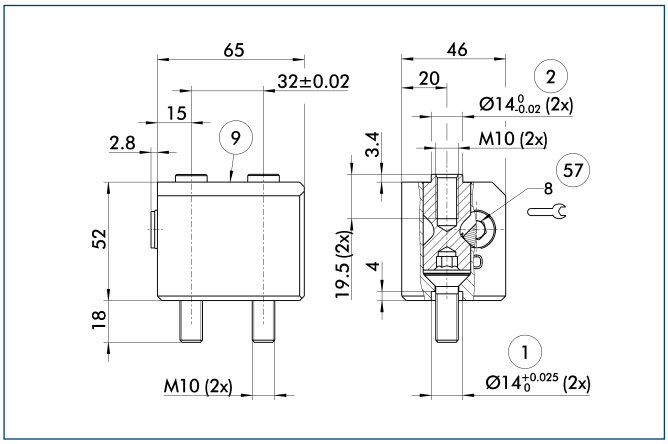


① Gripper connection
② Finger connection
⑨ For mounting screw connection diagram, see basic version
㊼ Locking

The BSWS quick-change jaw system enables top jaws to be changed on the gripper manually and rapidly. An adapter (BSWS-A) and a base (BSWS-B) are required for each gripper jaw.
For a reverse assembly without height set-up, one adapter (BSWS-A) and a kit (BSWS-U) per gripper jaw are required. Another effect of the BSWS-U is, that there are no disturbing fastening bores in the finger contour.

| Description | ID |
|---|---|
| Quick-change Jaw System adapter | |
| BSWS-A 160 | **0303030** |
| Quick-change Jaw System base | |
| BSWS-B 160 | **0303031** |
| Quick-change Jaw System reversed | |
| BSWS-U 160 | **0303045** |

## Universal intermediate jaw

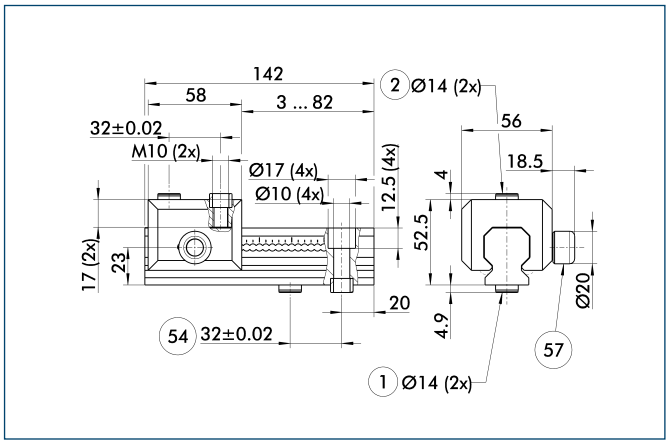


① Gripper connection
② Finger connection
㊹ Optional right or left connection
㊼ Locking

The universal intermediate jaw allows fast tool-free and reliable plugging and shifting of top jaws at the gripper.

| Description | ID | Grid dimension |
|---|---|---|
| Universal intermediate jaw | | |
| UZB 160 | **0300046** | 4 mm |
| UZB-S 160 | **5518274** | 4 mm |

ⓘ The slide UZB-S can be removed completely and has to be ordered separately. Moreover, it allows a fast jaw change.

You can find more detailed information and individual parts of the above-mentioned accessories in the "Accessories" catalog section.

## Force measuring jaws

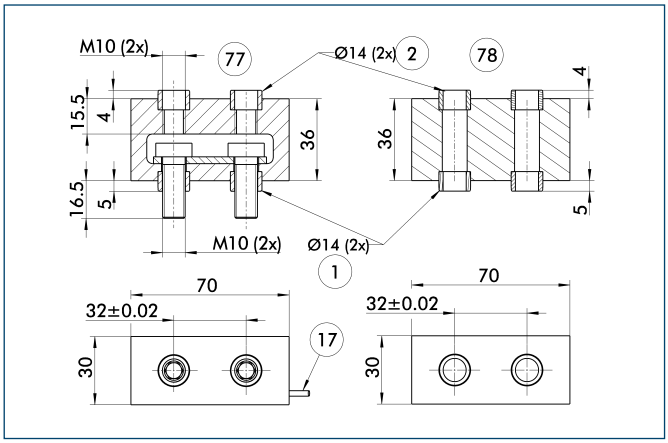


① Gripper connection
② Finger connection
⑰ Cable outlet
⑦⑦ Active intermediate jaws
⑦⑧ Passive intermediate jaws

Force measuring jaws measure gripping forces, but can also determine workpiece weights or dimensional deviations. There are active and passive intermediate jaws (FMS-ZBA or FMS-ZBP). At least one active force measuring jaw is required per gripper, the rest can be passive. For each active jaw, a FMS-A1 control unit and a FMS-A connection cable are required.

| Description | ID |
|---|---|
| Active intermediate jaws | |
| FMS-ZBA 160 | **0301840** |
| Passive intermediate jaws | |
| FMS-ZBP 160 | **0301841** |
| Electronic Processor | |
| FMS-A2 | **0301811** |
| Connection cables | |
| FMS-AK0200 | **0301820** |
| FMS-AK0500 | **0301821** |
| FMS-AK1000 | **0301822** |
| FMS-AK2000 | **0301823** |

## Finger blanks

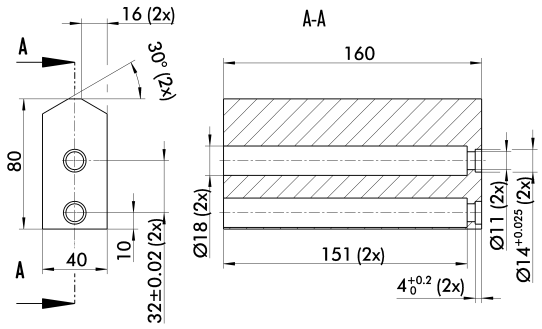


Finger blanks for customized subsequent machining

| Description | ID | Material | Scope of delivery |
|---|---|---|---|
| Finger blanks | | | |
| ABR-plus 160 | **0300014** | Aluminum | 1 |
| SBR-plus 160 | **0300024** | 16 MnCr 5 | 1 |

You can find more detailed information and individual parts of the above-mentioned accessories in the “Accessories” catalog section.

## Tolerance compensation unit

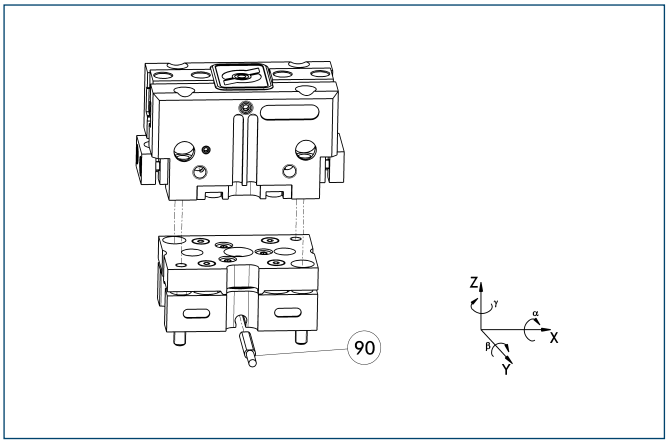


90 Monitoring of locking

Grippers can be directly mounted without an adapter plate. Tolerance compensation unit and gripper have an identical screw connection diagram. Therefore the tolerance compensation units can be assembled later. Please consider the additional assembly height of the tolerance compensation unit. For details see catalog “Robot Accessories”.

| Description | ID | Locking | Deflection |
|---|---|---|---|
| Compensation unit | | | |
| TCU-160-3-MV-P | **0324846** | Yes | ±2°/±1°/±1.5° |
| TCU-160-3-OV-P | **0324847** | No | ±2°/±1°/±1.5° |

## Attachment valves

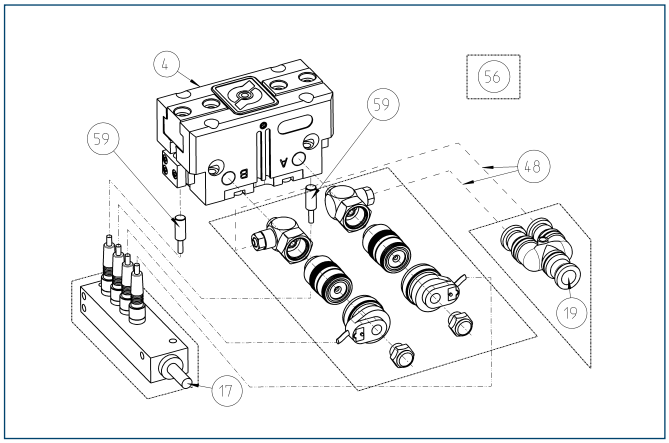


4 Gripper
17 Cable outlet
19 Air connection
48 Hose
56 Included in delivery
59 Monitoring “gripping”

For each gripper one attachment valve ABV is required, optional with distributor for sensors and valves. Attachment valves increase the efficiency, reduce the installation work and air consumption and simplify air supply. For details please refer to the “Accessories” catalog section.

| Description | ID |
|---|---|
| Attachment valves | |
| ABV-MV30-G1/8 | **0303328** |
| ABV-MV30-G1/8-V2-M8 | **0303396** |
| ABV-MV30-G1/8-V4-M8 | **0303366** |
| ABV-MV30-G1/8-V8-M8 | **0303367** |

You can find more detailed information and individual parts of the above-mentioned accessories in the “Accessories” catalog section.

## Programmable magnetic switch

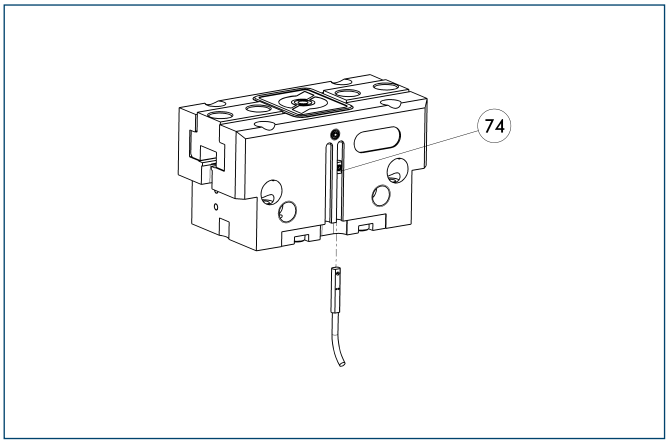


(74) Stop for MMS-P

Position monitoring with two programmable positions per sensor. The end position monitoring is mounted in the C-slot.

| Description | ID | Recommended product |
|---|---|---|
| Programmable magnetic switch | | |
| MMS-P 22-S-M8-PNP | **0301370** | • |
| MMSK-P 22-S-PNP | **0301371** | |
| Connection cables | | |
| KA BG08-L 4P-0500 | **0307767** | |
| KA BG08-L 4P-1000 | **0307768** | |
| KA BW08-L 4P-0500 | **0307765** | |
| KA BW08-L 4P-1000 | **0307766** | |
| Sensor Distributor | | |
| V2-M8-4P-2XM8-3P | **0301380** | |

ⓘ Please note the minimum permitted bending radii for the sensor cables, which are generally 35 mm.
ⓘ Per gripper one sensor (closer/NO) is required, optionally a cable extension.

## Electronic magnetic switches

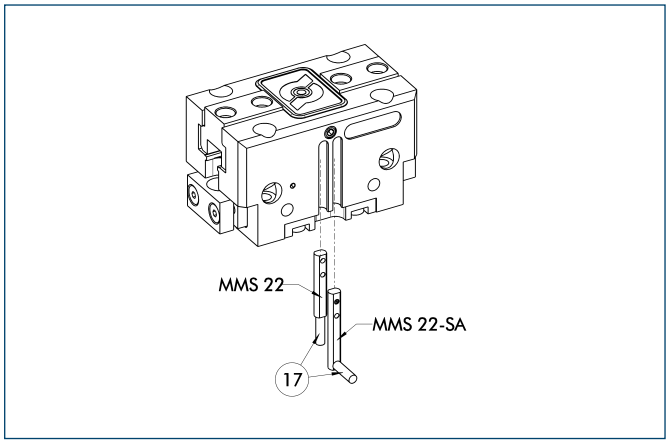


(17) Cable outlet

End position monitoring for mounting in the C-slot

| Description | ID | Recommended product |
|---|---|---|
| Electronic magnetic switches | | |
| MMS 22-S-M5-PNP | **0301438** | |
| MMS 22-S-M5-NPN | **0301439** | |
| MMS 22-S-M8-PNP | **0301432** | • |
| MMS 22-S-M8-NPN | **0301433** | |
| MMSK 22-S-PNP | **0301434** | |
| MMSK 22-S-NPN | **0301435** | |
| Electronic magnetic switches with lateral cable outlet | | |
| MMS 22-S-M5-PNP-SA | **0301448** | |
| MMS 22-S-M5-NPN-SA | **0301449** | |
| MMS 22-S-M8-PNP-SA | **0301442** | • |
| MMS 22-S-M8-NPN-SA | **0301443** | |
| MMSK 22-S-PNP-SA | **0301444** | |
| MMSK 22-S-NPN-SA | **0301445** | |
| Reed Switches | | |
| RMS 22-S-M8 | **0377720** | • |
| Connection cables | | |
| KA BG05-L 3P-0300 | **0301652** | |
| KA BG08-L 3P-0300-PNP | **0301622** | |
| KA BG08-L 3P-0500-PNP | **0301623** | |
| KA BW05-L 3P-0300 | **0301650** | |
| KA BW08-L 3P-0300-NPN | **0301602** | |
| KA BW08-L 3P-0300-PNP | **0301594** | |
| KA BW08-L 3P-0500-NPN | **9641116** | |
| KA BW08-L 3P-0500-PNP | **0301502** | |
| Cable extensions | | |
| KV BW08-SG08 3P-0030-PNP | **0301495** | |
| KV BW08-SG08 3P-0100-PNP | **0301496** | |
| KV BW08-SG08 3P-0200-PNP | **0301497** | |

ⓘ Two sensors (closer/NO) are required for each gripper, plus extension cables as an option.
ⓘ Please note the minimum permitted bending radii for the sensor cables, which are generally 35 mm.

You can find more detailed information and individual parts of the above-mentioned accessories in the “Accessories” catalog section.

## Inductive proximity switches

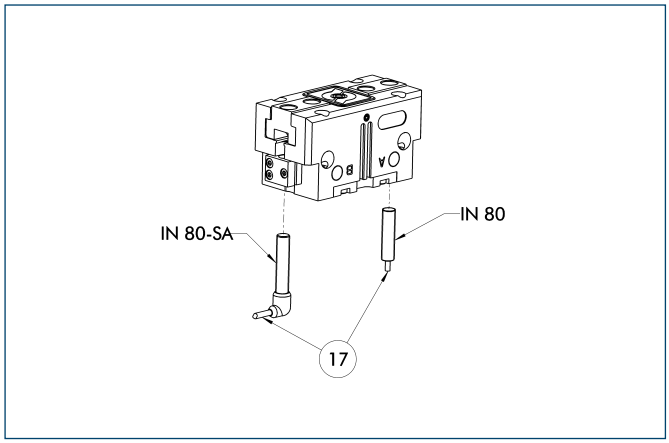


⑰ Cable outlet

End position monitoring for direct mounting

| Description | ID | Recommended product |
|---|---|---|
| Inductive proximity switches | | |
| IN 80-S-M8 | **0301478** | • |
| IN 80-S-M12 | **0301578** | |
| INK 80-S | **0301550** | |
| Inductive proximity switch with lateral outlet | | |
| IN 80-S-M12-SA | **0301587** | |
| IN 80-S-M8-SA | **0301483** | • |
| INK 80-S-SA | **0301566** | |
| Connection cables | | |
| KA BG08-L 3P-0300-PNP | **0301622** | |
| KA BG08-L 3P-0500-PNP | **0301623** | |
| KA BG12-L 3P-0500-PNP | **30016369** | |
| KA BW08-L 3P-0300-PNP | **0301594** | |
| KA BW08-L 3P-0500-PNP | **0301502** | |
| KA BW12-L 3P-0300-PNP | **0301503** | |
| KA BW12-L 3P-0500-PNP | **0301507** | |
| Cable extensions | | |
| KV BG12-SG12 3P-0030-PNP | **0301999** | |
| KV BG12-SG12 3P-0060-PNP | **0301998** | |
| KV BW08-SG08 3P-0030-PNP | **0301495** | |
| KV BW08-SG08 3P-0100-PNP | **0301496** | |
| KV BW08-SG08 3P-0200-PNP | **0301497** | |
| KV BW12-SG12 3P-0030-PNP | **0301595** | |
| KV BW12-SG12 3P-0100-PNP | **0301596** | |
| KV BW12-SG12 3P-0200-PNP | **0301597** | |

ⓘ Two sensors (closer/NO) are required for each gripper, plus extension cables as an option.

ⓘ Please note the minimum permitted bending radii for the sensor cables, which are generally 35 mm.

## Cylindrical Reed Switches

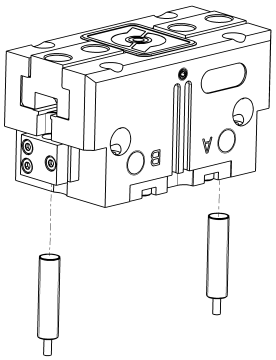

End position monitoring mounted with mounting kit

| Description | ID |
|---|---|
| Mounting kit for proximity switch | |
| AS-RMS 80 PGN/PZN-plus 160-380 | **0377727** |
| Reed Switches | |
| RMS 80-S-M8 | **0377721** |

ⓘ Two sensors (closer/NO) are required for each gripper, plus extension cables as an option.

ⓘ This mounting kit needs to be ordered optionally as an accessory.

ⓘ Please note the minimum permitted bending radii for the sensor cables, which are generally 35 mm.

You can find more detailed information and individual parts of the above-mentioned accessories in the “Accessories” catalog section.

## Analog position sensor

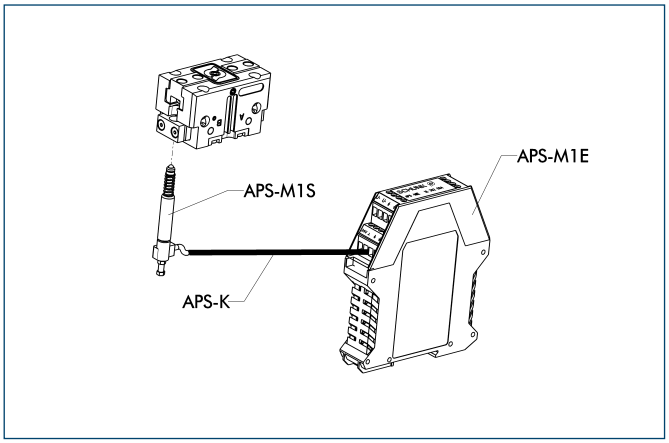


Analog multi position monitoring for any desired positions

| Description | ID |
|---|---|
| Mounting kit | |
| AS-APS-M1-160/1 and 240/2 | **0302083** |
| Connection cables | |
| APS-K0200 | **0302066** |
| APS-K0700 | **0302068** |
| Electronic Processor | |
| APS-M1E | **0302064** |
| Sensor | |
| APS-M1S | **0302062** |

ⓘ When using an APS system, for each gripper a mounting kit (AS-APS), an APS sensor (APS-M 1S, incl. 3 m cable) as well as an electronics (APS-M1e) are required.

ⓘ An extension cable (APS-K) can be connected between the sensor and the electronics as an option. The max. cable length between the sensor and the electronics is 10 m, between the electronics and their control unit (PLC) it is max. 1 m.

## Flexible Position Sensor

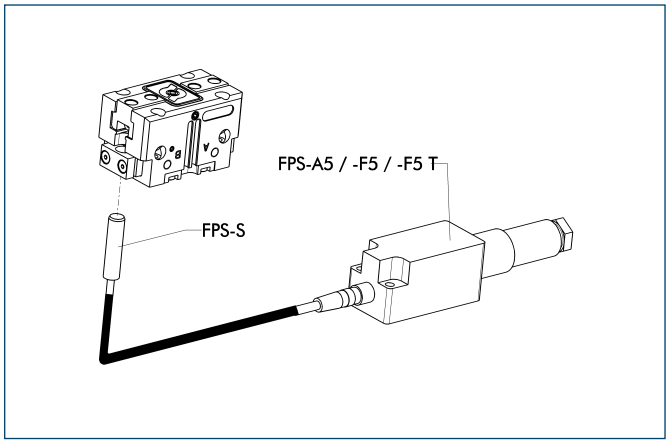


Flexible position monitoring of up to five positions

| Description | ID |
|---|---|
| Mounting kit for FPS | |
| AS-PGN/PZN-plus 160/1 | **0301638** |
| Electronic Processor | |
| FPS-F5 | **0301805** |
| FPS-F5 T | **0301807** |
| Sensor | |
| FPS-S M8 | **0301704** |

ⓘ When using a FPS system, a FPS sensor (FPS-S) and a control unit (FPS-F5 / F5 T or A5) are required for each gripper as well as a mounting kit (AS), if listed. Cable extensions (KV) are available as options in the “Accessories” catalog section.

You can find more detailed information and individual parts of the above-mentioned accessories in the “Accessories” catalog section.

# PGF



**Sizes**
50 ... 125

**Weight**
0.3 kg ... 5.3 kg

**Gripping force**
240 N ... 1900 N

**Stroke per finger**
7.5 mm ... 31.5 mm

**Workpiece weight**
1.2 kg ... 7.1 kg

## Application example




Assembly unit for mounting a pin in a bore with tolerances for the position. The compensation unit compensates for the planar offset without turning or tilting the workpiece.

1 2-Finger Parallel Gripper PGF top jaw and workpiece

2 AGE-XY Compensation Unit

## Universal Gripper
universal Parallel Gripper with surface-guided base jaw

## Field of application
suitable for clean working environments and high part diversity
thanks to its long jaw stroke and high gripping forces




## Your advantages and benefits

**Precise flat guidance**
for very good guidance characteristics

**Large stroke at compact design**
for minimal interfering contours

**Mounting from two sides in three screw directions possible**
for universal and flexible gripper assembly

**Air supply via hose-free direct connection or screw connections**
for the flexible supply of compressed air in all automation systems

**M5 connection on both sides of the guidances**
for the use of lubricating nipples

## General note to the series

**Principle of function**
Wedge-hook kinematics

**Housing material**
Aluminum alloy, hard-anodized

**Base jaw material**
Steel

**Actuation**
pneumatic, with filtered compressed air (10 microns): dry, lubricated or non-lubricated
Pressure medium: Required quality class of compressed air according to
DIN ISO 8573-1: 6 4 4

**Warranty**
24 months (details, general terms and conditions and operation manuals can be downloaded under www.schunk.com)

**Scope of delivery**
Brackets for proximity switches, centering sleeves, O-rings for direct connection, assembly and operating manual with manufacturer's declaration

**Gripping force maintenance device**
possible with SDV-P pressure maintenance valve

## Sectional diagram

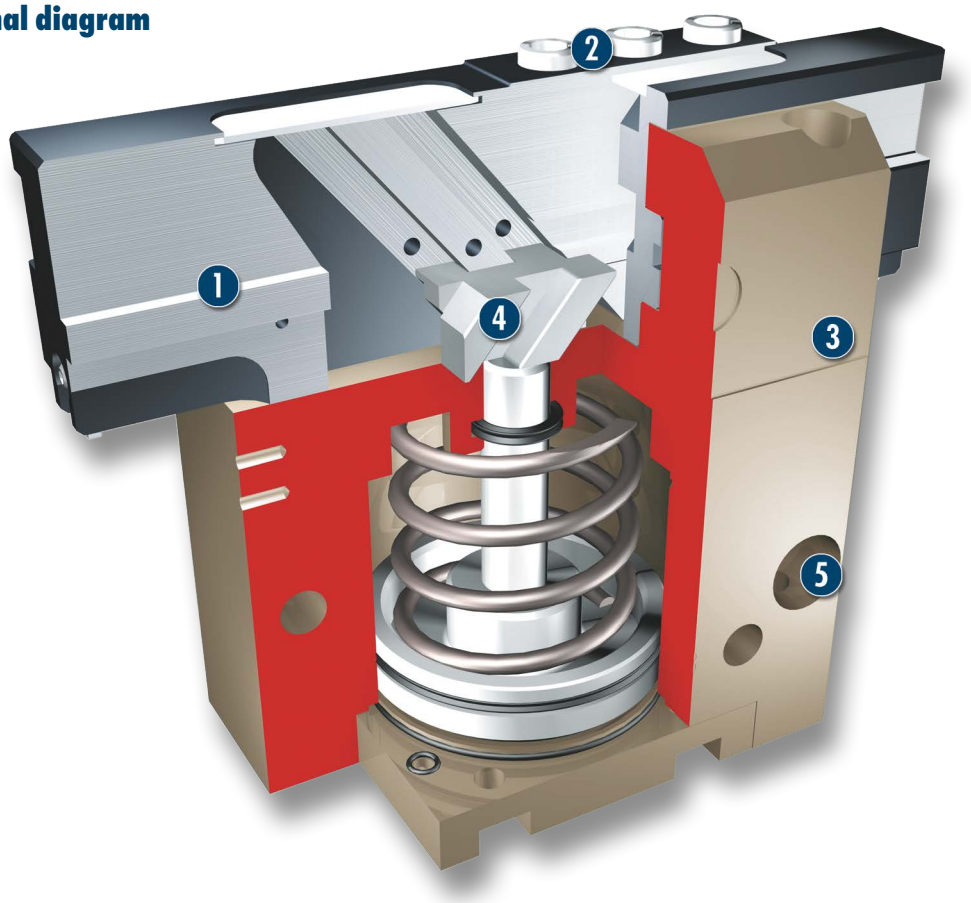


**1 Guidance**
precise gripping through flat, low-play precision ground guidance along the entire length of the housing

**2 Base jaw**
for the connection of workpiece-specific gripper fingers

**3 Housing**
weight-optimized through application of hard-anodized, high-strength aluminum alloy

**4 Wedge-hook design**
for high power transmission and centric gripping

**5 Centering and mounting possibilities**
for universal assembly of the gripper

## Functional description

The round piston is moved up or down by compressed air.
Through its angled active surfaces, the wedge hook transforms this movement into the lateral, synchronous gripping movement of both base jaws.

## Options and special information

Due to the long guidance, the gripper is highly resistant during gripping operations where the gripper fingers are exposed to high moment loads. Grippers with a higher exchange accuracy are available on request.

## Accessories

Accessories from SCHUNK – the suitable supplement for maximum functionality, reliability and performance of all automation modules.

### Centering sleeves



### Fittings



### Inductive proximity switches



### Sensor cables



### Plastic inserts





### Sensor Distributor

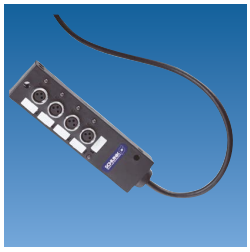

### Gripper pads

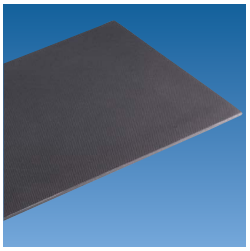

### Flexible Position Sensor

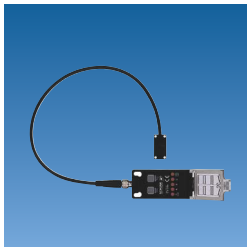

### Pressure maintenance valve



ⓘ For the exact size of the required accessories, availability of this size and the designation and ID, please refer to the additional views at the end of the size in question. You will find more detailed information on our accessory range in the “Accessories” catalog section.

## General note to the series

### Gripping force

is the arithmetic total of the gripping force applied to each finger at distance P (see illustration) measured from the upper edge of the gripper.

### Finger length

The finger length is measured from the upper edge of the gripper housing in the direction of the main axis.

### Repeat accuracy

is defined as the spread of the limit position after 100 consecutive strokes.

### Workpiece weight

The recommended workpiece weight is calculated for a force-type connection with a coefficient of friction of 0.1 and a safety factor of 2 against slippage of the workpiece on acceleration due to gravity g. Considerably heavier workpiece weights are permitted with form-fit gripping.

### Closing and opening times

Closing and opening times are purely the times that the base jaws or fingers are in motion. Valve switching times, hose filling times or PLC reaction times are not included in the above times and must be taken into consideration when determining cycle times.

# PGF 50






## Gripping force, I.D. gripping

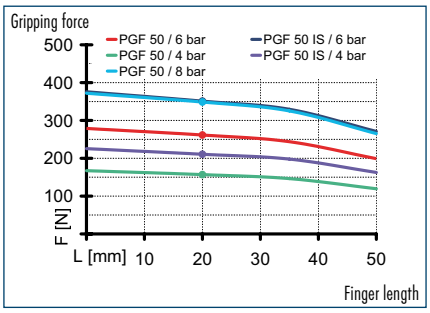


## Gripping force, O.D. gripping

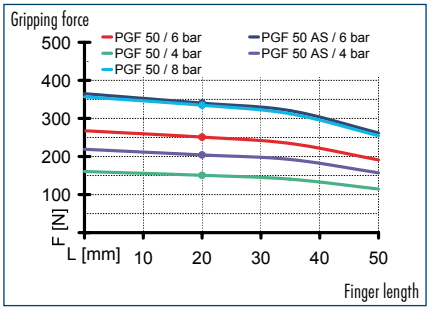


## Finger load

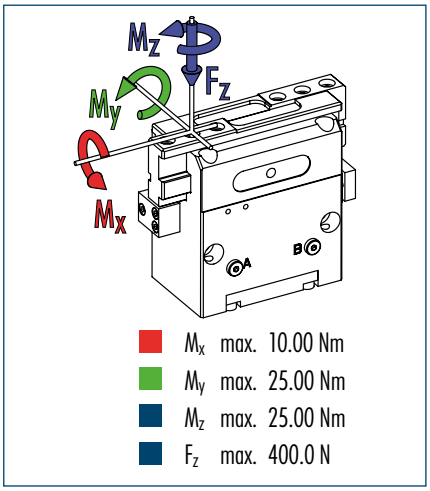


| | |
|---|---|
| $M_x$ | max. 10.00 Nm |
| $M_y$ | max. 25.00 Nm |
| $M_z$ | max. 25.00 Nm |
| $F_z$ | max. 400.0 N |

ⓘ The indicated moments and forces are static values, apply per base jaw and may occur simultaneously. $M_y$ may arise in addition to the moment generated by the gripping force itself. If the max. permitted finger weight is exceeded, it is imperative to throttle the air pressure so that the jaw movement occurs without any hitting or bouncing. Service life may be reduced.

## Technical data

| Description | | PGF 50 | PGF 50-AS | PGF 50-IS |
|---|---|---|---|---|
| ID | | 0340360 | 0340361 | 0340362 |
| Stroke per finger | [mm] | 7.5 | 7.5 | 7.5 |
| Closing force | [N] | 240 | 340 | |
| Opening force | [N] | 260 | | 360 |
| Min. spring force | [N] | | 100 | 100 |
| Weight | [kg] | 0.3 | 0.35 | 0.35 |
| Recommended workpiece weight | [kg] | 1.2 | 1.2 | 1.2 |
| Air consumption per double stroke | [cm³] | 14 | 14 | 14 |
| Min./max. operating pressure | [bar] | 3.5/8 | 4/6.5 | 4/6.5 |
| Nominal operating pressure | [bar] | 6 | 6 | 6 |
| Closing/opening time | [s] | 0.03/0.03 | 0.03/0.07 | 0.07/0.03 |
| Max. permitted finger length | [mm] | 50 | 50 | 50 |
| Max. permitted weight per finger | [kg] | 0.25 | 0.25 | 0.25 |
| IP class | | 40 | 40 | 40 |
| Min./max. ambient temperature | [°C] | -10/90 | -10/90 | -10/90 |
| Repeat accuracy | [mm] | 0.02 | 0.02 | 0.02 |

## Main view

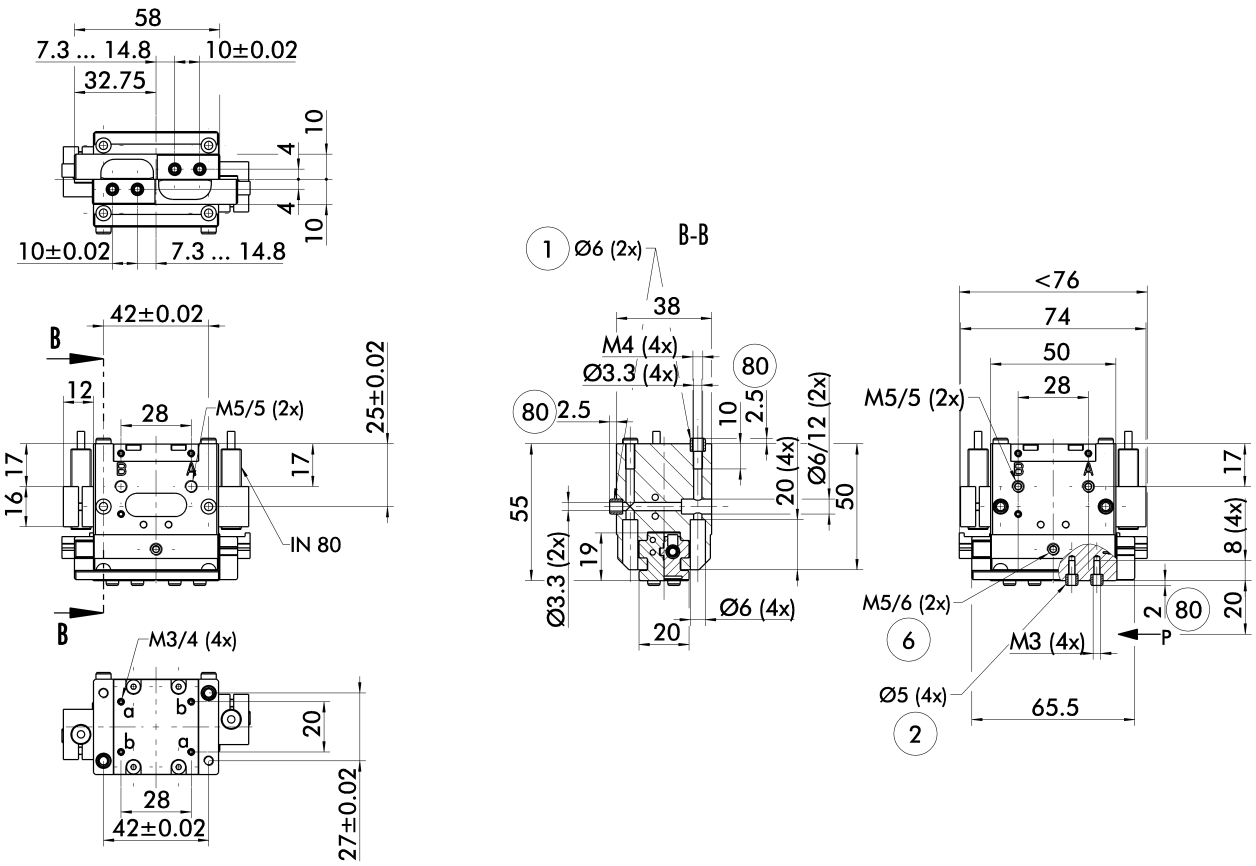


The drawing shows the gripper in the basic version with closed jaws, the dimensions do not include the options described below.

ⓘ The SDV-P pressure maintenance valve can also be used for I.D. or O.D. gripping alternatively or in addition to the spring-loaded, mechanical gripping force maintenance device (see “Accessories” catalog section).

A, a Main/direct connection, gripper opening
B, b Main/direct connection, gripper closing
① Gripper connection
② Finger connection
⑥ Lubricating nipple connection
(80) Depth of the centering sleeve hole in the matching part

## Hose-free direct connection

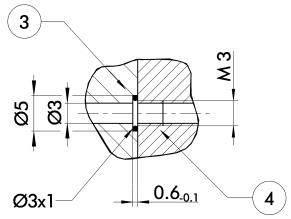


③ Adapter
④ Gripper

The direct connection is used for supplying compressed air without hoses. Instead, the pressure medium is fed through bore-holes in the mounting plate.

## Mounting kit for FPS

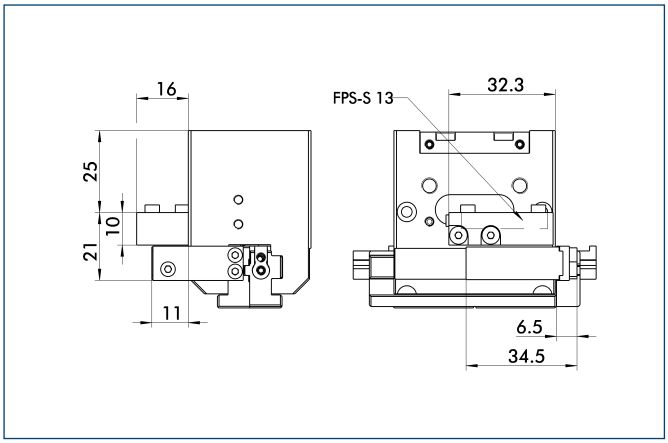


The FPS flexible position sensor can distinguish between five freely programmable ranges or switching points for the stroke of a gripper and can be used in conjunction with a PC as a measuring system.

| Description | ID |
|---|---|
| Mounting kit for FPS | |
| AS-PGF 50 | **0302731** |

ⓘ This mounting kit needs to be ordered optionally as an accessory.

## Inductive proximity switches

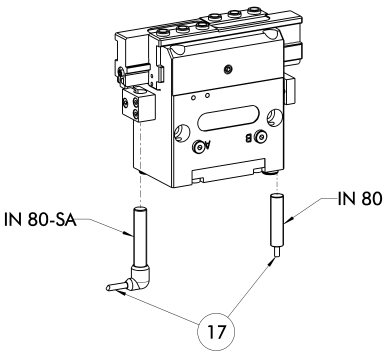


⑰ Cable outlet

End position monitoring for direct mounting

| Description | ID | Recommended product |
|---|---|---|
| Inductive proximity switches | | |
| IN 80-S-M8 | **0301478** | • |
| IN 80-S-M12 | **0301578** | |
| INK 80-S | **0301550** | |
| IN-C 80-S-M8 | **0301475** | |
| Inductive proximity switch with lateral outlet | | |
| IN 80-S-M12-SA | **0301587** | |
| IN 80-S-M8-SA | **0301483** | • |
| INK 80-S-SA | **0301566** | |
| Connection cables | | |
| KA BG08-L 3P-0300-PNP | **0301622** | |
| KA BG08-L 3P-0500-PNP | **0301623** | |
| KA BG12-L 3P-0500-PNP | **30016369** | |
| KA BW08-L 3P-0300-PNP | **0301594** | |
| KA BW08-L 3P-0500-PNP | **0301502** | |
| KA BW12-L 3P-0300-PNP | **0301503** | |
| KA BW12-L 3P-0500-PNP | **0301507** | |
| Cable extensions | | |
| KV BG12-SG12 3P-0030-PNP | **0301999** | |
| KV BG12-SG12 3P-0060-PNP | **0301998** | |
| KV BW08-SG08 3P-0030-PNP | **0301495** | |
| KV BW08-SG08 3P-0100-PNP | **0301496** | |
| KV BW08-SG08 3P-0200-PNP | **0301497** | |
| KV BW12-SG12 3P-0030-PNP | **0301595** | |
| KV BW12-SG12 3P-0100-PNP | **0301596** | |
| KV BW12-SG12 3P-0200-PNP | **0301597** | |

ⓘ Two sensors (closer/NO) are required for each gripper, plus extension cables as an option.

ⓘ Please note the minimum permitted bending radii for the sensor cables, which are generally 35 mm.

You can find more detailed information and individual parts of the above-mentioned accessories in the “Accessories” catalog section.

## Flexible Position Sensor

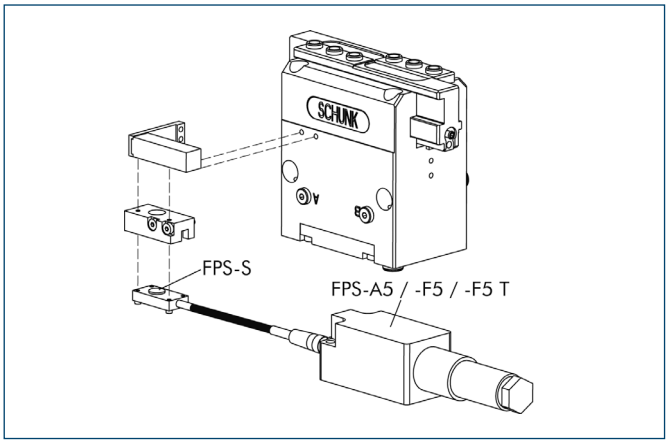


Flexible position monitoring of up to five positions

| Description | ID |
|---|---|
| Mounting kit for FPS | |
| AS-PGF 50 | **0302731** |
| Electronic Processor | |
| FPS-F5 | **0301805** |
| FPS-F5 T | **0301807** |
| Sensor | |
| FPS-S 13 | **0301705** |

ⓘ When using a FPS system, a FPS sensor (FPS-S) and a control unit (FPS-F5 / F5 T or A5) are required for each gripper as well as a mounting kit (AS), if listed. Cable extensions (KV) are available as options in the “Accessories” catalog section.

You can find more detailed information and individual parts of the above-mentioned accessories in the “Accessories” catalog section.

# PGF 64





## Gripping force, I.D. gripping

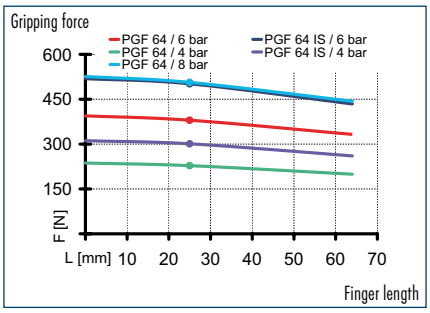


## Gripping force, O.D. gripping

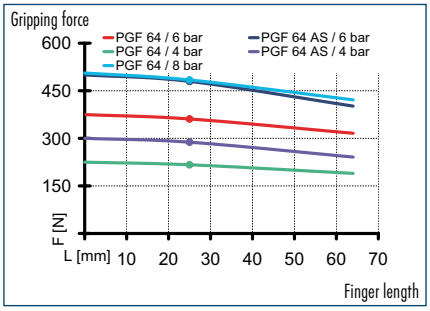


## Finger load

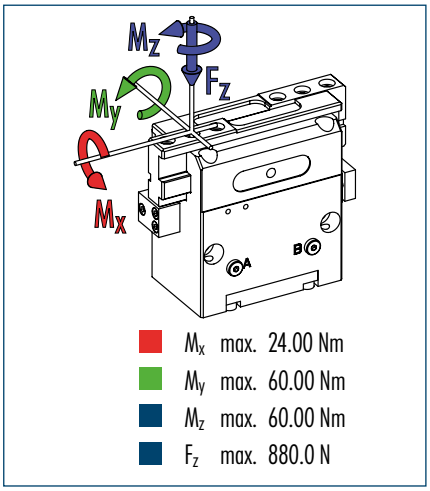


- $M_x$ max. 24.00 Nm
- $M_y$ max. 60.00 Nm
- $M_z$ max. 60.00 Nm
- $F_z$ max. 880.0 N

ⓘ The indicated moments and forces are static values, apply per base jaw and may occur simultaneously. $M_y$ may arise in addition to the moment generated by the gripping force itself. If the max. permitted finger weight is exceeded, it is imperative to throttle the air pressure so that the jaw movement occurs without any hitting or bouncing. Service life may be reduced.

## Technical data

| Description | | PGF 64 | PGF 64-AS | PGF 64-IS |
|---|---|---|---|---|
| ID | | 0340365 | 0340366 | 0340367 |
| Stroke per finger | [mm] | 11.5 | 11.5 | 11.5 |
| Closing force | [N] | 360 | 480 | |
| Opening force | [N] | 380 | | 500 |
| Min. spring force | [N] | | 120 | 120 |
| Weight | [kg] | 0.6 | 0.7 | 0.7 |
| Recommended workpiece weight | [kg] | 1.8 | 1.8 | 1.8 |
| Air consumption per double stroke | [cm³] | 30 | 30 | 30 |
| Min./max. operating pressure | [bar] | 3.5/8 | 4/6.5 | 4/6.5 |
| Nominal operating pressure | [bar] | 6 | 6 | 6 |
| Closing/opening time | [s] | 0.06/0.06 | 0.05/0.1 | 0.1/0.05 |
| Max. permitted finger length | [mm] | 64 | 64 | 64 |
| Max. permitted weight per finger | [kg] | 0.4 | 0.4 | 0.4 |
| IP class | | 40 | 40 | 40 |
| Min./max. ambient temperature | [°C] | -10/90 | -10/90 | -10/90 |
| Repeat accuracy | [mm] | 0.02 | 0.02 | 0.02 |

## Main view

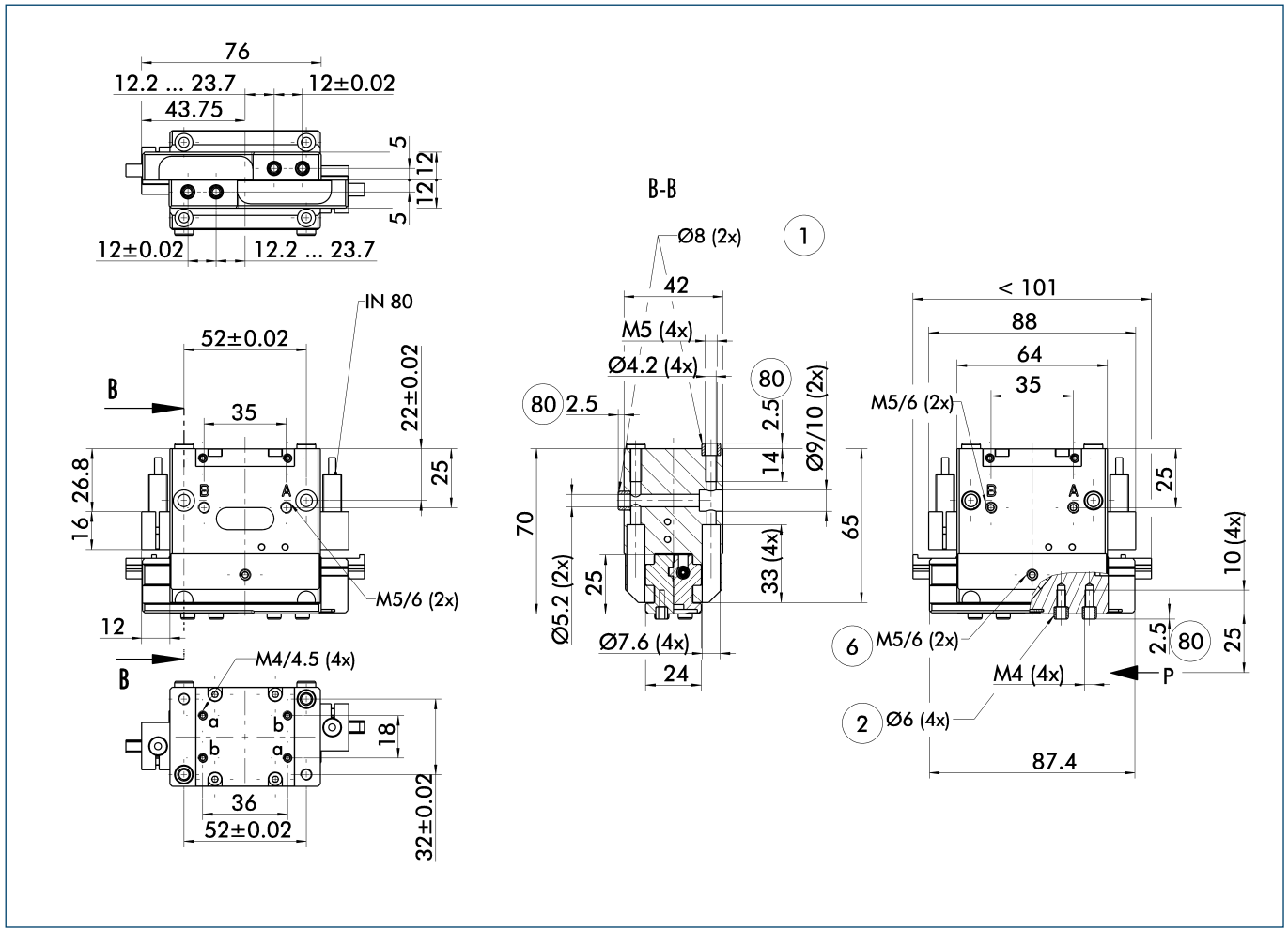


The drawing shows the gripper in the basic version with closed jaws, the dimensions do not include the options described below.

ⓘ The SDV-P pressure maintenance valve can also be used for I.D. or O.D. gripping alternatively or in addition to the spring-loaded, mechanical gripping force maintenance device (see "Accessories" catalog section).

A, a Main/direct connection, gripper opening
B, b Main/direct connection, gripper closing
① Gripper connection
② Finger connection
⑥ Lubricating nipple connection
80 Depth of the centering sleeve hole in the matching part

## Hose-free direct connection

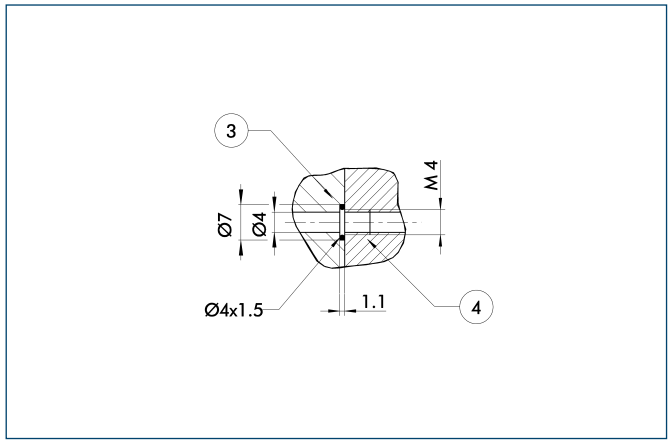


③ Adapter
④ Gripper

The direct connection is used for supplying compressed air without hoses. Instead, the pressure medium is fed through bore-holes in the mounting plate.

## Mounting kit for FPS

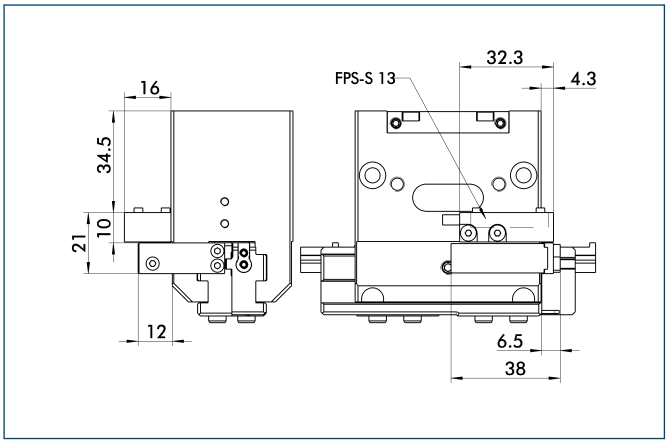


The FPS flexible position sensor can distinguish between five freely programmable ranges or switching points for the stroke of a gripper and can be used in conjunction with a PC as a measuring system.

| Description | ID |
|---|---|
| Mounting kit for FPS | |
| AS-PGF 64 | **0302732** |

ⓘ This mounting kit needs to be ordered optionally as an accessory.

## Inductive proximity switches

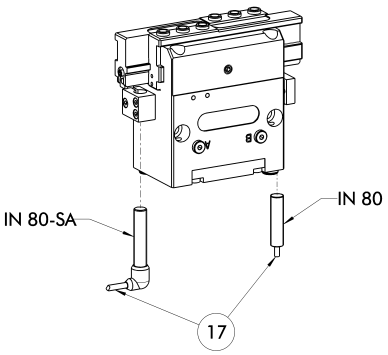


⑰ Cable outlet

End position monitoring for direct mounting

| Description | ID | Recommended product |
|---|---|---|
| Inductive proximity switches | | |
| IN 80-S-M8 | **0301478** | • |
| IN 80-S-M12 | **0301578** | |
| INK 80-S | **0301550** | |
| IN-C 80-S-M8 | **0301475** | |
| Inductive proximity switch with lateral outlet | | |
| IN 80-S-M12-SA | **0301587** | |
| IN 80-S-M8-SA | **0301483** | • |
| INK 80-S-SA | **0301566** | |
| Connection cables | | |
| KA BG08-L 3P-0300-PNP | **0301622** | |
| KA BG08-L 3P-0500-PNP | **0301623** | |
| KA BG12-L 3P-0500-PNP | **30016369** | |
| KA BW08-L 3P-0300-PNP | **0301594** | |
| KA BW08-L 3P-0500-PNP | **0301502** | |
| KA BW12-L 3P-0300-PNP | **0301503** | |
| KA BW12-L 3P-0500-PNP | **0301507** | |
| Cable extensions | | |
| KV BG12-SG12 3P-0030-PNP | **0301999** | |
| KV BG12-SG12 3P-0060-PNP | **0301998** | |
| KV BW08-SG08 3P-0030-PNP | **0301495** | |
| KV BW08-SG08 3P-0100-PNP | **0301496** | |
| KV BW08-SG08 3P-0200-PNP | **0301497** | |
| KV BW12-SG12 3P-0030-PNP | **0301595** | |
| KV BW12-SG12 3P-0100-PNP | **0301596** | |
| KV BW12-SG12 3P-0200-PNP | **0301597** | |

ⓘ Two sensors (closer/NO) are required for each gripper, plus extension cables as an option.

ⓘ Please note the minimum permitted bending radii for the sensor cables, which are generally 35 mm.

You can find more detailed information and individual parts of the above-mentioned accessories in the “Accessories” catalog section.

## Flexible Position Sensor

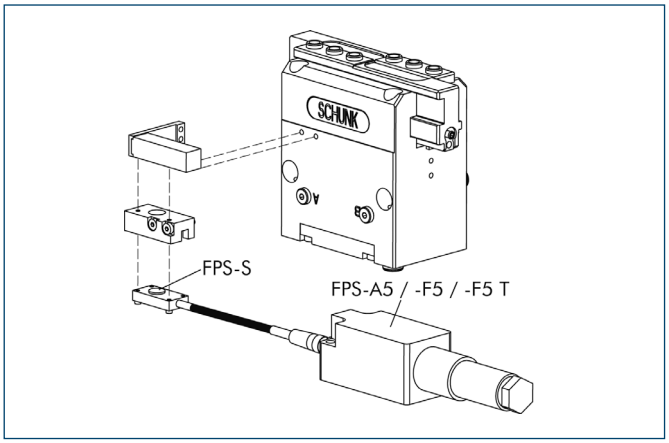


Flexible position monitoring of up to five positions

| Description | ID |
|---|---|
| Mounting kit for FPS | |
| AS-PGF 64 | **0302732** |
| Electronic Processor | |
| FPS-F5 | **0301805** |
| FPS-F5 T | **0301807** |
| Sensor | |
| FPS-S 13 | **0301705** |

ⓘ When using a FPS system, a FPS sensor (FPS-S) and a control unit (FPS-F5 / F5 T or A5) are required for each gripper as well as a mounting kit (AS), if listed. Cable extensions (KV) are available as options in the “Accessories” catalog section.

You can find more detailed information and individual parts of the above-mentioned accessories in the “Accessories” catalog section.

# PGF 80





## Gripping force, I.D. gripping

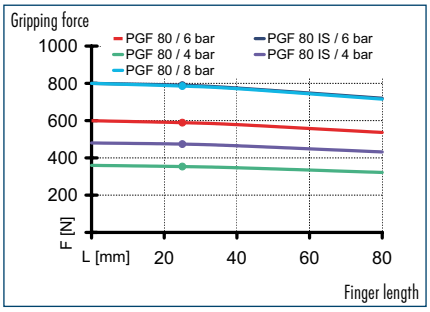


## Gripping force, O.D. gripping

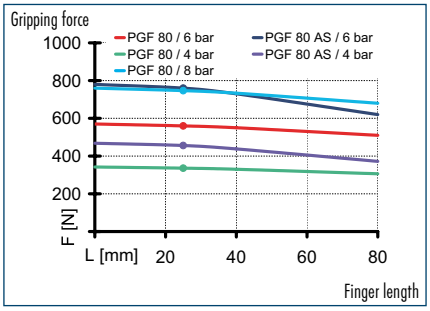


## Finger load

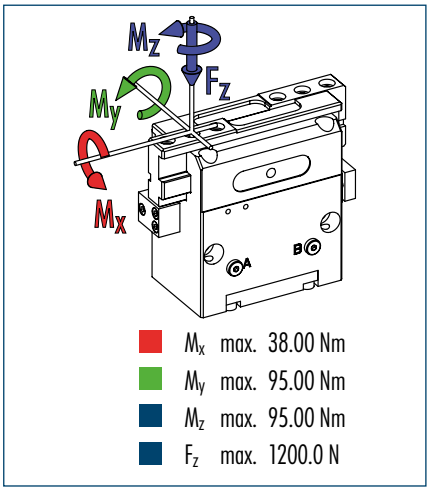


- $M_x$ max. 38.00 Nm
- $M_y$ max. 95.00 Nm
- $M_z$ max. 95.00 Nm
- $F_z$ max. 1200.0 N

ⓘ The indicated moments and forces are static values, apply per base jaw and may occur simultaneously. $M_y$ may arise in addition to the moment generated by the gripping force itself. If the max. permitted finger weight is exceeded, it is imperative to throttle the air pressure so that the jaw movement occurs without any hitting or bouncing. Service life may be reduced.

## Technical data

| Description | | PGF 80 | PGF 80-AS | PGF 80-IS |
|---|---|---|---|---|
| ID | | 0340370 | 0340371 | 0340372 |
| Stroke per finger | [mm] | 16.5 | 16.5 | 16.5 |
| Closing force | [N] | 560 | 760 | |
| Opening force | [N] | 590 | | 790 |
| Min. spring force | [N] | | 200 | 200 |
| Weight | [kg] | 1.15 | 1.25 | 1.25 |
| Recommended workpiece weight | [kg] | 2.8 | 2.8 | 2.8 |
| Air consumption per double stroke | [cm³] | 77 | 77 | 77 |
| Min./max. operating pressure | [bar] | 3.5/8 | 4/6.5 | 4/6.5 |
| Nominal operating pressure | [bar] | 6 | 6 | 6 |
| Closing/opening time | [s] | 0.1/0.1 | 0.08/0.14 | 0.14/0.08 |
| Max. permitted finger length | [mm] | 80 | 80 | 80 |
| Max. permitted weight per finger | [kg] | 0.75 | 0.75 | 0.75 |
| IP class | | 40 | 40 | 40 |
| Min./max. ambient temperature | [°C] | -10/90 | -10/90 | -10/90 |
| Repeat accuracy | [mm] | 0.02 | 0.02 | 0.02 |

## Main view

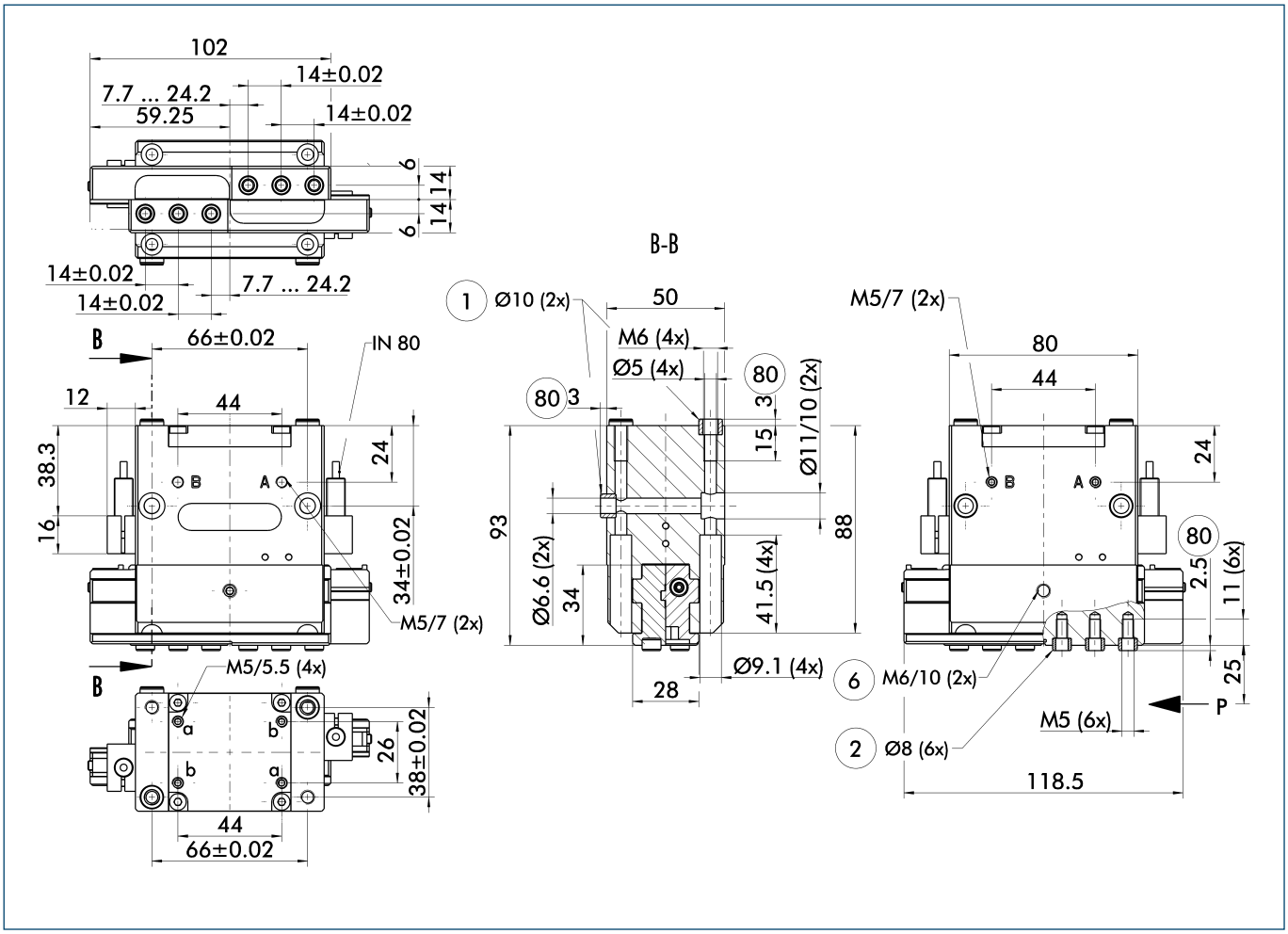


The drawing shows the gripper in the basic version with closed jaws, the dimensions do not include the options described below.

ⓘ The SDV-P pressure maintenance valve can also be used for I.D. or O.D. gripping alternatively or in addition to the spring-loaded, mechanical gripping force maintenance device (see "Accessories" catalog section).

A, a Main/direct connection, gripper opening
B, b Main/direct connection, gripper closing
① Gripper connection
② Finger connection
⑥ Lubricating nipple connection
80 Depth of the centering sleeve hole in the matching part

## Hose-free direct connection

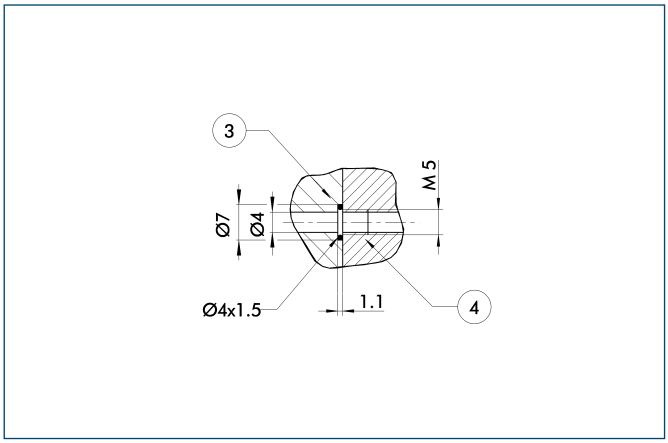


③ Adapter
④ Gripper

The direct connection is used for supplying compressed air without hoses. Instead, the pressure medium is fed through bore-holes in the mounting plate.

## Mounting kit for FPS

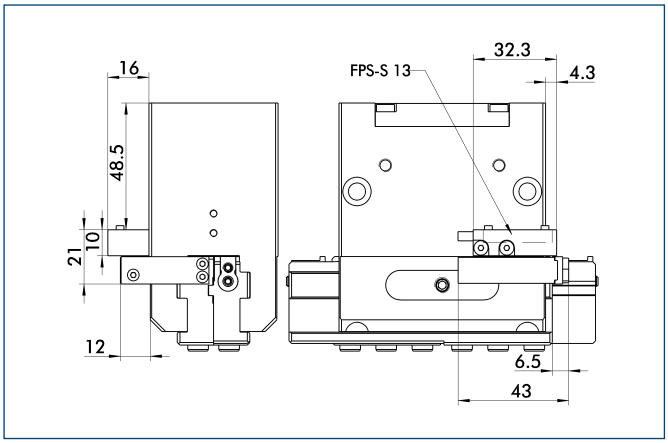


The FPS flexible position sensor can distinguish between five freely programmable ranges or switching points for the stroke of a gripper and can be used in conjunction with a PC as a measuring system.

| Description | ID |
|---|---|
| Mounting kit for FPS | |
| AS-PGF 80 | **0302733** |

ⓘ This mounting kit needs to be ordered optionally as an accessory.

## Inductive proximity switches

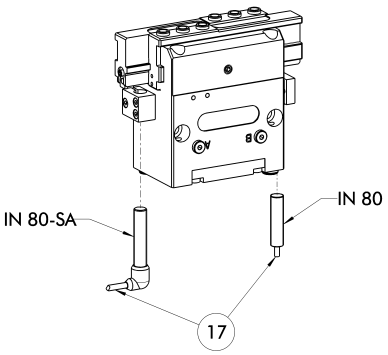


⑰ Cable outlet

End position monitoring for direct mounting

| Description | ID | Recommended product |
|---|---|---|
| Inductive proximity switches | | |
| IN 80-S-M8 | **0301478** | • |
| IN 80-S-M12 | **0301578** | |
| INK 80-S | **0301550** | |
| IN-C 80-S-M8 | **0301475** | |
| Inductive proximity switch with lateral outlet | | |
| IN 80-S-M12-SA | **0301587** | |
| IN 80-S-M8-SA | **0301483** | • |
| INK 80-S-SA | **0301566** | |
| Connection cables | | |
| KA BG08-L 3P-0300-PNP | **0301622** | |
| KA BG08-L 3P-0500-PNP | **0301623** | |
| KA BG12-L 3P-0500-PNP | **30016369** | |
| KA BW08-L 3P-0300-PNP | **0301594** | |
| KA BW08-L 3P-0500-PNP | **0301502** | |
| KA BW12-L 3P-0300-PNP | **0301503** | |
| KA BW12-L 3P-0500-PNP | **0301507** | |
| Cable extensions | | |
| KV BG12-SG12 3P-0030-PNP | **0301999** | |
| KV BG12-SG12 3P-0060-PNP | **0301998** | |
| KV BW08-SG08 3P-0030-PNP | **0301495** | |
| KV BW08-SG08 3P-0100-PNP | **0301496** | |
| KV BW08-SG08 3P-0200-PNP | **0301497** | |
| KV BW12-SG12 3P-0030-PNP | **0301595** | |
| KV BW12-SG12 3P-0100-PNP | **0301596** | |
| KV BW12-SG12 3P-0200-PNP | **0301597** | |

ⓘ Two sensors (closer/NO) are required for each gripper, plus extension cables as an option.

ⓘ Please note the minimum permitted bending radii for the sensor cables, which are generally 35 mm.

You can find more detailed information and individual parts of the above-mentioned accessories in the “Accessories” catalog section.

## Flexible Position Sensor

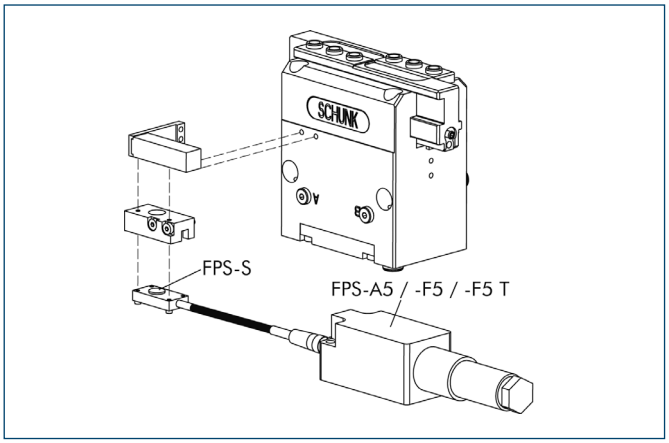


Flexible position monitoring of up to five positions

| Description | ID |
|---|---|
| Mounting kit for FPS | |
| AS-PGF 80 | **0302733** |
| Electronic Processor | |
| FPS-F5 | **0301805** |
| FPS-F5 T | **0301807** |
| Sensor | |
| FPS-S 13 | **0301705** |

ⓘ When using a FPS system, a FPS sensor (FPS-S) and a control unit (FPS-F5 / F5 T or A5) are required for each gripper as well as a mounting kit (AS), if listed. Cable extensions (KV) are available as options in the “Accessories” catalog section.

You can find more detailed information and individual parts of the above-mentioned accessories in the “Accessories” catalog section.

# PGF 100





## Gripping force, I.D. gripping

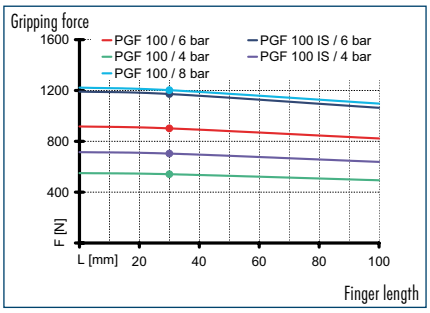


## Gripping force, O.D. gripping

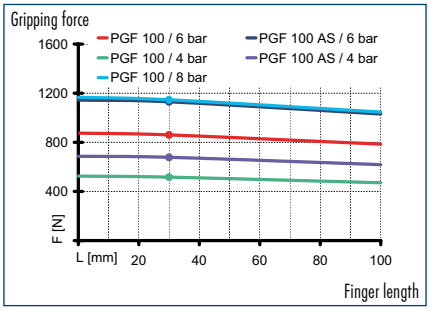


## Finger load

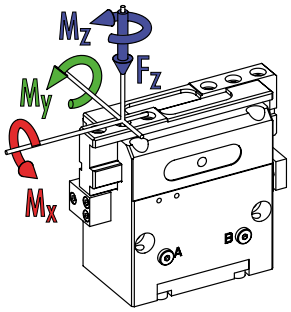


- $M_x$ max. 40.00 Nm
- $M_y$ max. 100.00 Nm
- $M_z$ max. 100.00 Nm
- $F_z$ max. 1600.0 N

ⓘ The indicated moments and forces are static values, apply per base jaw and may occur simultaneously. $M_y$ may arise in addition to the moment generated by the gripping force itself. If the max. permitted finger weight is exceeded, it is imperative to throttle the air pressure so that the jaw movement occurs without any hitting or bouncing. Service life may be reduced.

## Technical data

| Description | | PGF 100 | PGF 100-AS | PGF 100-IS |
|---|---|---|---|---|
| ID | | 0340380 | 0340381 | 0340382 |
| Stroke per finger | [mm] | 23.5 | 23.5 | 23.5 |
| Closing force | [N] | 880 | 1150 | |
| Opening force | [N] | 900 | | 1170 |
| Min. spring force | [N] | | 270 | 270 |
| Weight | [kg] | 2.35 | 2.85 | 2.85 |
| Recommended workpiece weight | [kg] | 4.4 | 4.4 | 4.4 |
| Air consumption per double stroke | [cm³] | 154 | 154 | 154 |
| Min./max. operating pressure | [bar] | 3.5/8 | 4/6.5 | 4/6.5 |
| Nominal operating pressure | [bar] | 6 | 6 | 6 |
| Closing/opening time | [s] | 0.15/0.15 | 0.16/0.25 | 0.25/0.16 |
| Max. permitted finger length | [mm] | 100 | 100 | 100 |
| Max. permitted weight per finger | [kg] | 1.4 | 1.4 | 1.4 |
| IP class | | 40 | 40 | 40 |
| Min./max. ambient temperature | [°C] | -10/90 | -10/90 | -10/90 |
| Repeat accuracy | [mm] | 0.03 | 0.03 | 0.03 |

## Main view

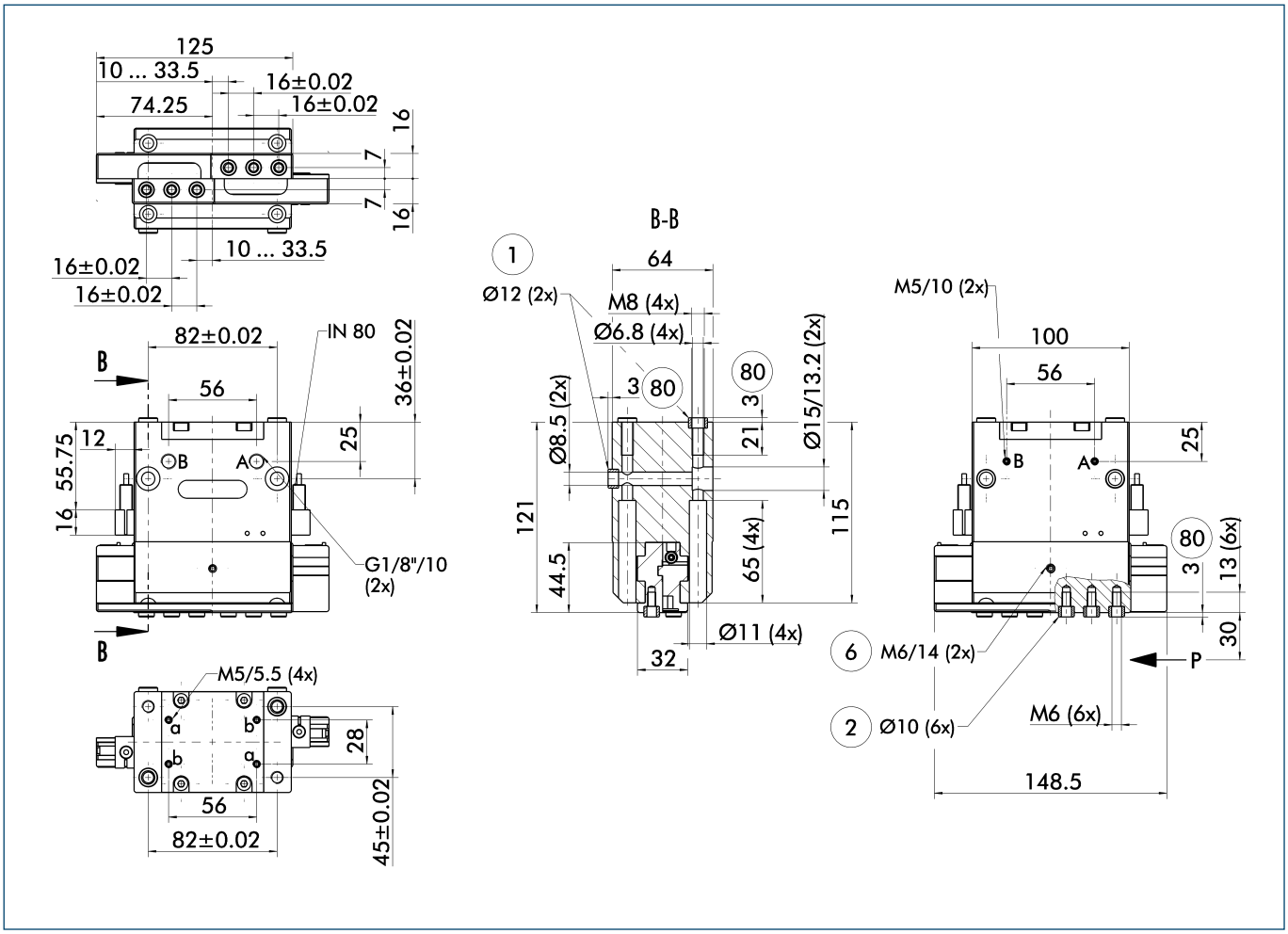


The drawing shows the gripper in the basic version with closed jaws, the dimensions do not include the options described below.

ⓘ The SDV-P pressure maintenance valve can also be used for I.D. or O.D. gripping alternatively or in addition to the spring-loaded, mechanical gripping force maintenance device (see "Accessories" catalog section).

A, a Main/direct connection, gripper opening
B, b Main/direct connection, gripper closing
① Gripper connection
② Finger connection
⑥ Lubricating nipple connection
80 Depth of the centering sleeve hole in the matching part

## Hose-free direct connection

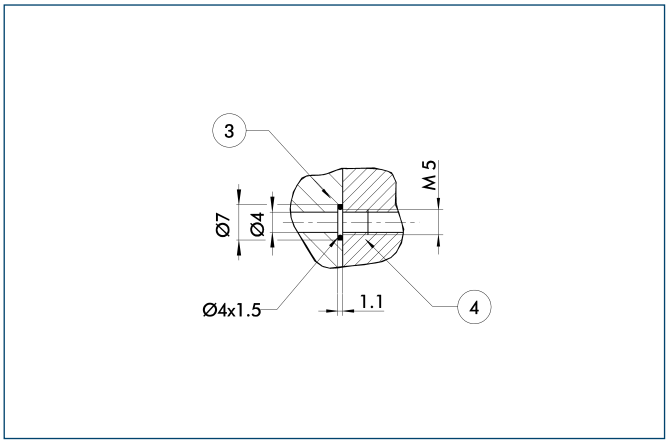


③ Adapter
④ Gripper

The direct connection is used for supplying compressed air without hoses. Instead, the pressure medium is fed through bore-holes in the mounting plate.

## Mounting kit for FPS

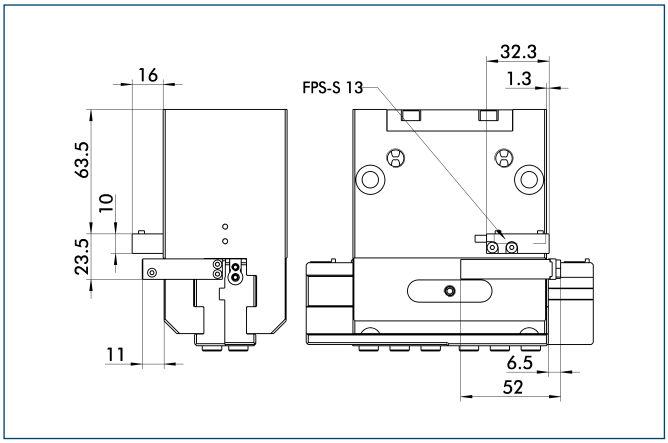


The FPS flexible position sensor can distinguish between five freely programmable ranges or switching points for the stroke of a gripper and can be used in conjunction with a PC as a measuring system.

| Description | ID |
|---|---|
| Mounting kit for FPS | |
| AS-PGF 100 | **0302734** |

ⓘ This mounting kit needs to be ordered optionally as an accessory.

## Inductive proximity switches

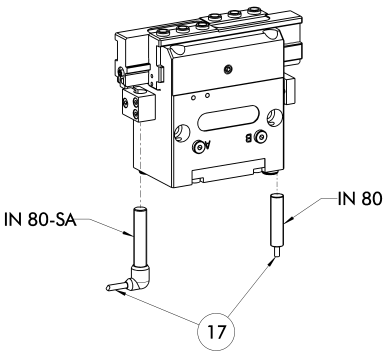


⑰ Cable outlet

End position monitoring for direct mounting

| Description | ID | Recommended product |
|---|---|---|
| Inductive proximity switches | | |
| IN 80-S-M8 | **0301478** | • |
| IN 80-S-M12 | **0301578** | |
| INK 80-S | **0301550** | |
| IN-C 80-S-M8 | **0301475** | |
| Inductive proximity switch with lateral outlet | | |
| IN 80-S-M12-SA | **0301587** | |
| IN 80-S-M8-SA | **0301483** | • |
| INK 80-S-SA | **0301566** | |
| Connection cables | | |
| KA BG08-L 3P-0300-PNP | **0301622** | |
| KA BG08-L 3P-0500-PNP | **0301623** | |
| KA BG12-L 3P-0500-PNP | **30016369** | |
| KA BW08-L 3P-0300-PNP | **0301594** | |
| KA BW08-L 3P-0500-PNP | **0301502** | |
| KA BW12-L 3P-0300-PNP | **0301503** | |
| KA BW12-L 3P-0500-PNP | **0301507** | |
| Cable extensions | | |
| KV BG12-SG12 3P-0030-PNP | **0301999** | |
| KV BG12-SG12 3P-0060-PNP | **0301998** | |
| KV BW08-SG08 3P-0030-PNP | **0301495** | |
| KV BW08-SG08 3P-0100-PNP | **0301496** | |
| KV BW08-SG08 3P-0200-PNP | **0301497** | |
| KV BW12-SG12 3P-0030-PNP | **0301595** | |
| KV BW12-SG12 3P-0100-PNP | **0301596** | |
| KV BW12-SG12 3P-0200-PNP | **0301597** | |

ⓘ Two sensors (closer/NO) are required for each gripper, plus extension cables as an option.

ⓘ Please note the minimum permitted bending radii for the sensor cables, which are generally 35 mm.


You can find more detailed information and individual parts of the above-mentioned accessories in the “Accessories” catalog section.

## Flexible Position Sensor

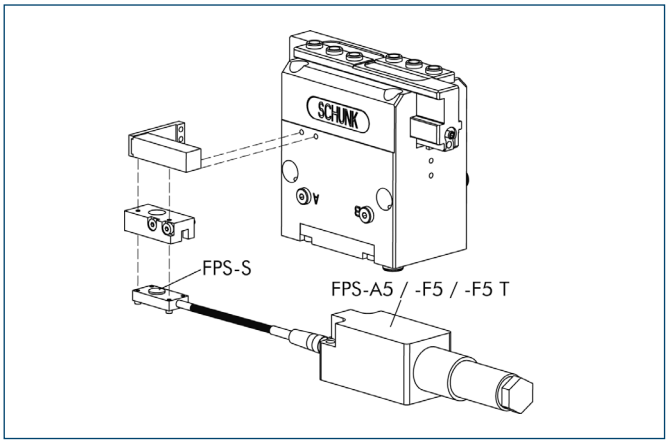


Flexible position monitoring of up to five positions

| Description | ID |
|---|---|
| Mounting kit for FPS | |
| AS-PGF 100 | **0302734** |
| Electronic Processor | |
| FPS-F5 | **0301805** |
| FPS-F5 T | **0301807** |
| Sensor | |
| FPS-S 13 | **0301705** |

ⓘ When using a FPS system, a FPS sensor (FPS-S) and a control unit (FPS-F5 / F5 T or A5) are required for each gripper as well as a mounting kit (AS), if listed. Cable extensions (KV) are available as options in the “Accessories” catalog section.

You can find more detailed information and individual parts of the above-mentioned accessories in the “Accessories” catalog section.

# PGF 125

**Pneumatic • 2-Finger Parallel Gripper • Universal Gripper**



## Gripping force, I.D. gripping

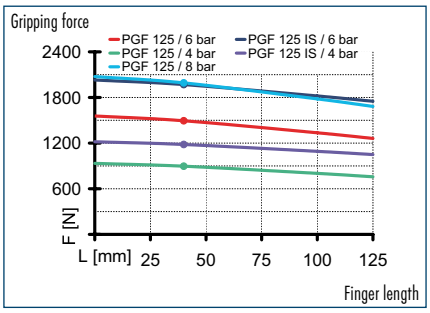


## Gripping force, O.D. gripping

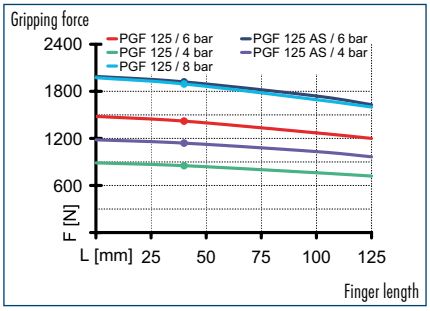


## Finger load

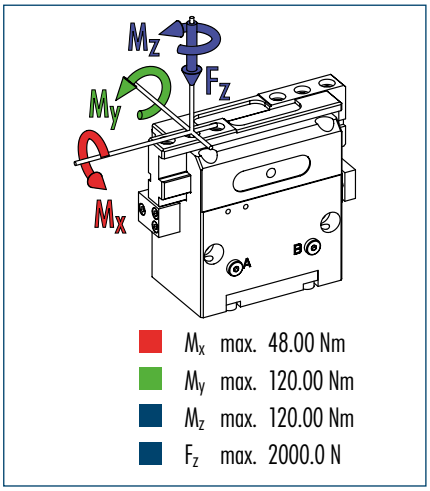


- $M_x$ max. 48.00 Nm
- $M_y$ max. 120.00 Nm
- $M_z$ max. 120.00 Nm
- $F_z$ max. 2000.0 N

ⓘ The indicated moments and forces are static values, apply per base jaw and may occur simultaneously. $M_y$ may arise in addition to the moment generated by the gripping force itself. If the max. permitted finger weight is exceeded, it is imperative to throttle the air pressure so that the jaw movement occurs without any hitting or bouncing. Service life may be reduced.

## Technical data

| Description | | PGF 125 | PGF 125-AS | PGF 125-IS |
|---|---|---|---|---|
| **ID** | | **0340390** | **0340391** | **0340392** |
| Stroke per finger | [mm] | 31.5 | 31.5 | 31.5 |
| Closing force | [N] | 1420 | 1900 | |
| Opening force | [N] | 1490 | | 1970 |
| Min. spring force | [N] | | 480 | 480 |
| Weight | [kg] | 5 | 5.3 | 5.3 |
| Recommended workpiece weight | [kg] | 7.1 | 7.1 | 7.1 |
| Air consumption per double stroke | [cm³] | 300 | 300 | 300 |
| Min./max. operating pressure | [bar] | 3.5/8 | 4/6.5 | 4/6.5 |
| Nominal operating pressure | [bar] | 6 | 6 | 6 |
| Closing/opening time | [s] | 0.25/0.25 | 0.22/0.4 | 0.4/0.22 |
| Max. permitted finger length | [mm] | 125 | 125 | 125 |
| Max. permitted weight per finger | [kg] | 2.4 | 2.4 | 2.4 |
| IP class | | 40 | 40 | 40 |
| Min./max. ambient temperature | [°C] | -10/90 | -10/90 | -10/90 |
| Repeat accuracy | [mm] | 0.03 | 0.03 | 0.03 |

## Main view

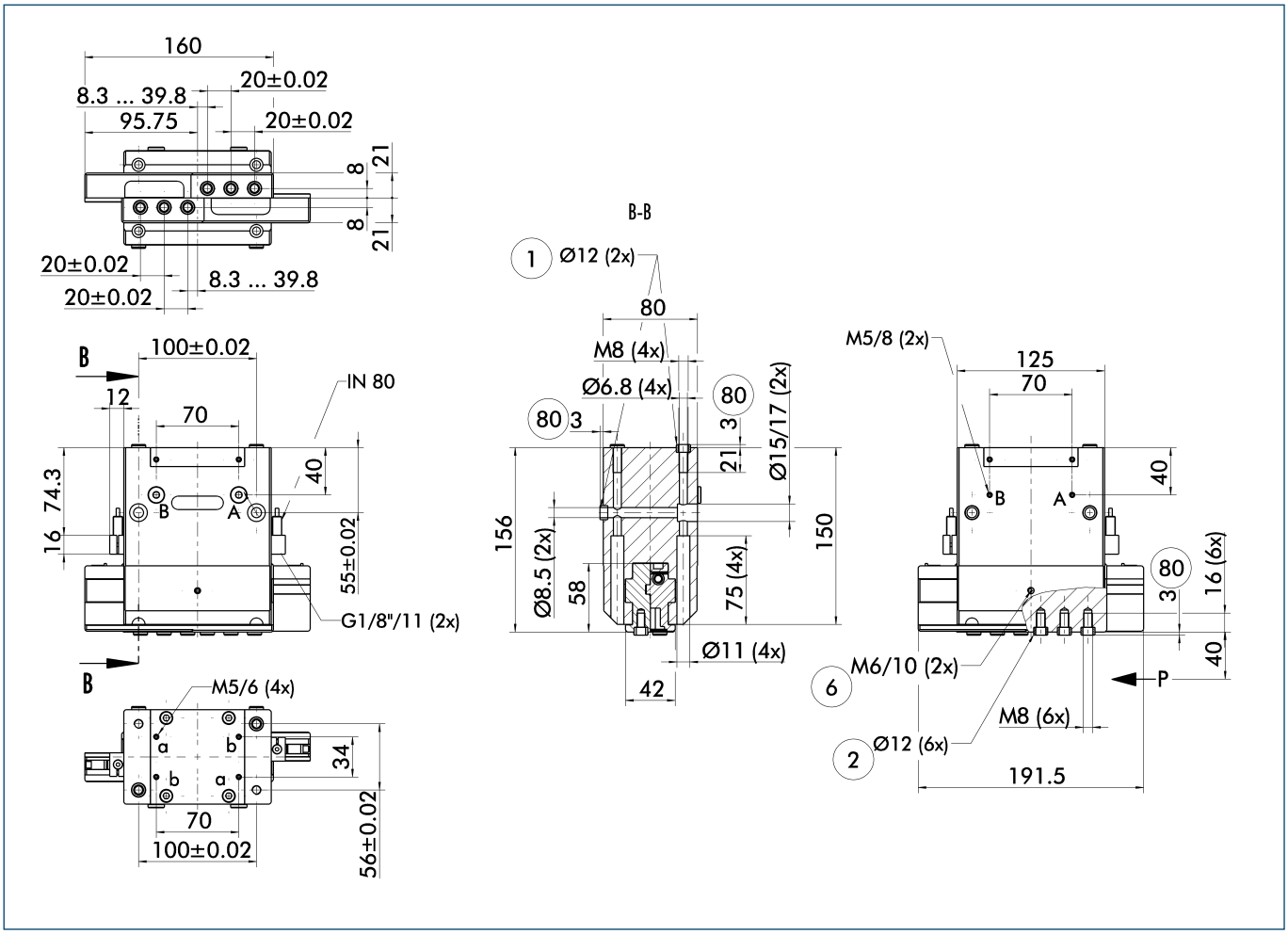


The drawing shows the gripper in the basic version with closed jaws, the dimensions do not include the options described below.

ⓘ The SDV-P pressure maintenance valve can also be used for I.D. or O.D. gripping alternatively or in addition to the spring-loaded, mechanical gripping force maintenance device (see "Accessories" catalog section).

A, a Main/direct connection, gripper opening
B, b Main/direct connection, gripper closing
① Gripper connection
② Finger connection
⑥ Lubricating nipple connection
80 Depth of the centering sleeve hole in the matching part

## Hose-free direct connection

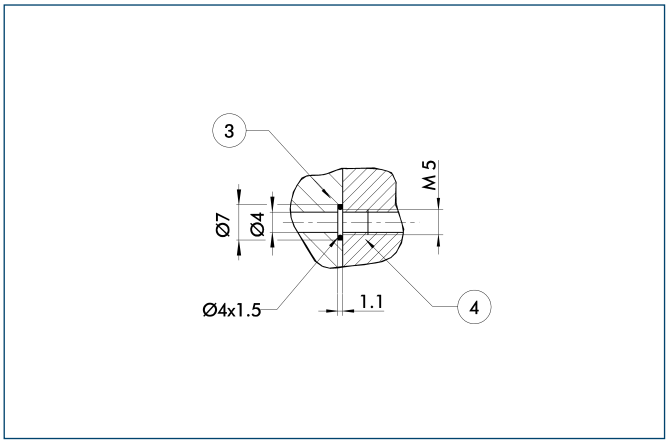


③ Adapter
④ Gripper

The direct connection is used for supplying compressed air without hoses. Instead, the pressure medium is fed through bore-holes in the mounting plate.

## Inductive proximity switches

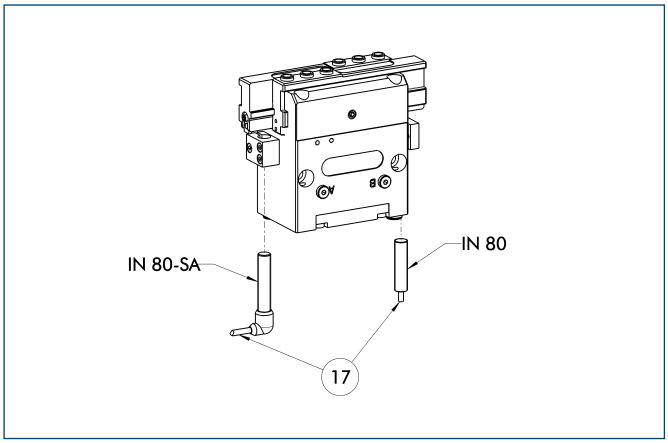


⑰ Cable outlet

End position monitoring for direct mounting

| Description | ID | Recommended product |
|---|---|---|
| Inductive proximity switches | | |
| IN 80-S-M8 | **0301478** | • |
| IN 80-S-M12 | **0301578** | |
| INK 80-S | **0301550** | |
| IN-C 80-S-M8 | **0301475** | |
| Inductive proximity switch with lateral outlet | | |
| IN 80-S-M12-SA | **0301587** | |
| IN 80-S-M8-SA | **0301483** | • |
| INK 80-S-SA | **0301566** | |
| Connection cables | | |
| KA BG08-L 3P-0300-PNP | **0301622** | |
| KA BG08-L 3P-0500-PNP | **0301623** | |
| KA BG12-L 3P-0500-PNP | **30016369** | |
| KA BW08-L 3P-0300-PNP | **0301594** | |
| KA BW08-L 3P-0500-PNP | **0301502** | |
| KA BW12-L 3P-0300-PNP | **0301503** | |
| KA BW12-L 3P-0500-PNP | **0301507** | |
| Cable extensions | | |
| KV BG12-SG12 3P-0030-PNP | **0301999** | |
| KV BG12-SG12 3P-0060-PNP | **0301998** | |
| KV BW08-SG08 3P-0030-PNP | **0301495** | |
| KV BW08-SG08 3P-0100-PNP | **0301496** | |
| KV BW08-SG08 3P-0200-PNP | **0301497** | |
| KV BW12-SG12 3P-0030-PNP | **0301595** | |
| KV BW12-SG12 3P-0100-PNP | **0301596** | |
| KV BW12-SG12 3P-0200-PNP | **0301597** | |

ⓘ Two sensors (closer/NO) are required for each gripper, plus extension cables as an option.

ⓘ Please note the minimum permitted bending radii for the sensor cables, which are generally 35 mm.

You can find more detailed information and individual parts of the above-mentioned accessories in the “Accessories” catalog section.

# PGM

**Pneumatic • 2-Finger Parallel Gripper • Universal Gripper**

**Sizes**
29 ... 140

**Weight**
0.025 kg ... 2.55 kg

**Gripping force**
30 N ... 1180 N

**Stroke per finger**
2 mm ... 15 mm

**Workpiece weight**
0.15 kg ... 5.9 kg

## Application example

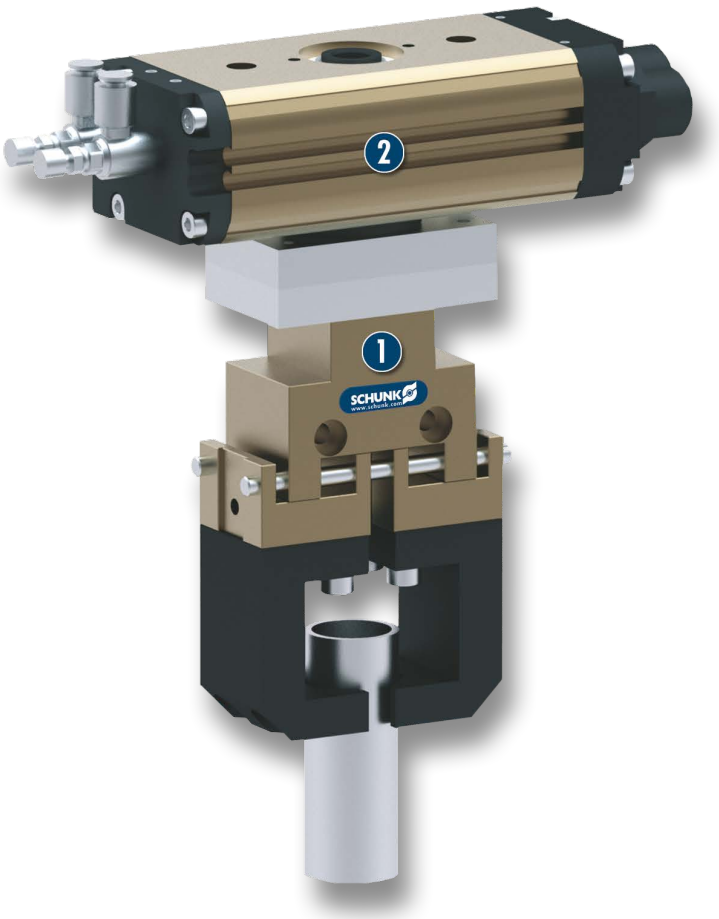


**Reversing unit for the economical reorientation of cylindrical bar material**

1. 2-Finger Parallel Gripper PGM
2. SRU-mini Miniature Rotary Unit

## Universal Gripper
universal, economical 2-Finger Parallel Gripper

## Field of application
for universal use in clean environments

## Your advantages and benefits

**Economical gripper series**
for material handling

**Rod guidance of the base jaws**
for excellent guidance characteristics

**Cylinder rod guidance**
for versatility and a long tool life

**Compact design**
for minimal interfering contours in the application

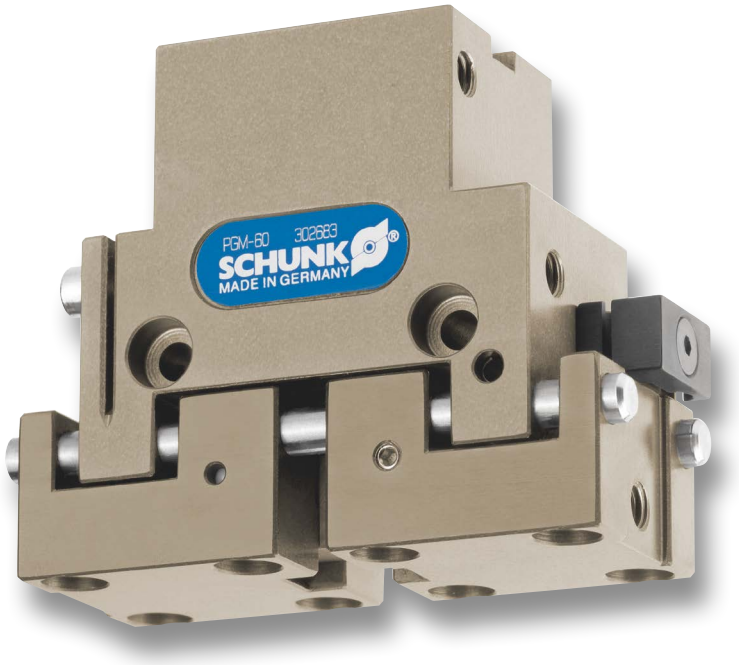


## General note to the series

**Principle of function**
Interior wedge-hook kinematics

**Housing material**
Aluminum alloy, hard-anodized

**Base jaw material**
Steel

**Actuation**
pneumatic, with filtered compressed air (10 microns): dry, lubricated or non-lubricated
Pressure medium: Required quality class of compressed air according to
DIN ISO 8573-1: 6 4 4

**Warranty**
24 months (details, general terms and conditions and operation manuals can be downloaded under www.schunk.com)

**Scope of delivery**
Brackets for proximity switches, centering sleeves, O-rings for direct connection, assembly and operating manual with manufacturer's declaration

## Sectional diagram

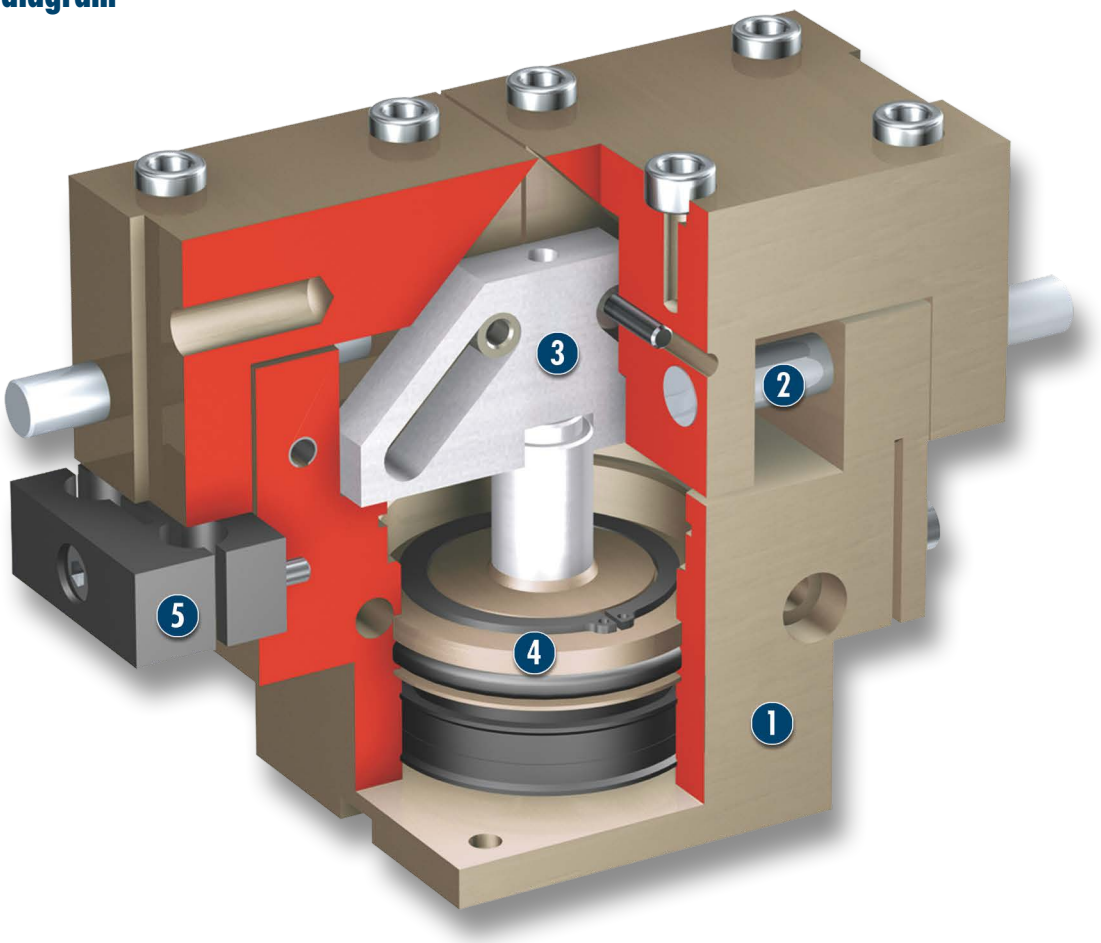


1 **Housing**
weight-optimized through application of hard-anodized, high-strength aluminum alloy

2 **Rod guidance**
simple yet resilient

3 **Kinematics**
internal, power transmission via line contact

4 **Drive**
using tried and tested pneumatic piston drive

5 **Sensor system**
Brackets for inductive proximity switches

## Functional description

The piston is moved up and down by compressed air.
The wedge hook with the cross bar of the base jaws, transform the piston motion into synchronized opening and closing.

## Options and special information

The PGM series is a product line with an important cost-benefit ratio.

## Accessories

Accessories from SCHUNK – the suitable supplement for maximum functionality, reliability and performance of all automation modules.

### Centering sleeves



### Fittings



### Magnetic Switches



### Inductive proximity switches



### Pressure maintenance valve



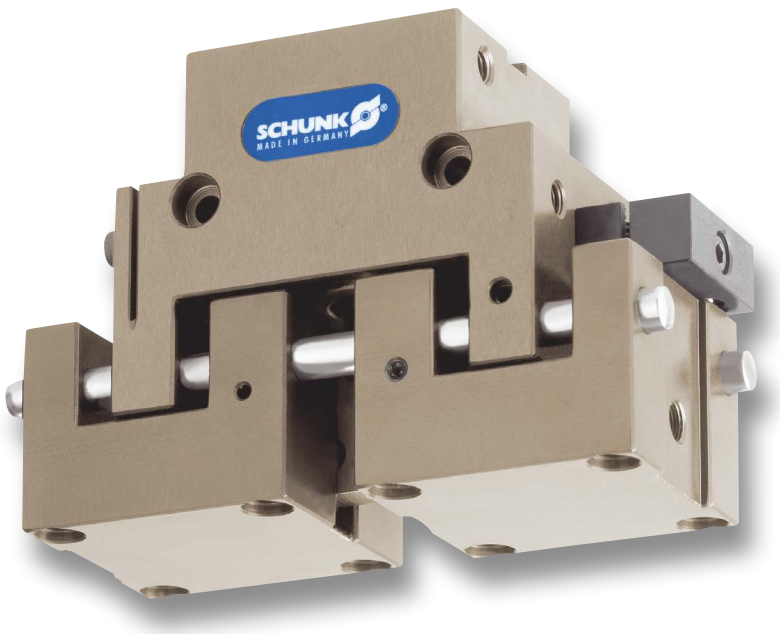

### Sensor cables



### Sensor Distributor

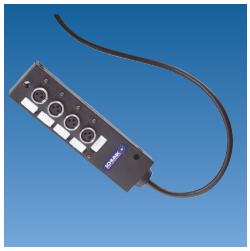

ⓘ For the exact size of the required accessories, availability of this size and the designation and ID, please refer to the additional views at the end of the size in question. You will find more detailed information on our accessory range in the “Accessories” catalog section.

## General note to the series

### Gripping force

is the arithmetic total of the gripping force applied to each finger at distance P (see illustration) measured from the upper edge of the gripper.

### Finger length

The finger length is measured from the upper edge of the gripper housing in the direction of the main axis.

### Repeat accuracy

is defined as the spread of the limit position after 100 consecutive strokes.

### Workpiece weight

The recommended workpiece weight is calculated for a force-type connection with a coefficient of friction of 0.1 and a safety factor of 2 against slippage of the workpiece on acceleration due to gravity g. Considerably heavier workpiece weights are permitted with form-fit gripping.

### Closing and opening times

Closing and opening times are purely the times that the base jaws or fingers are in motion. Valve switching times, hose filling times or PLC reaction times are not included in the above times and must be taken into consideration when determining cycle times.

# PGM 29

**Pneumatic • 2-Finger Parallel Gripper • Universal Gripper**

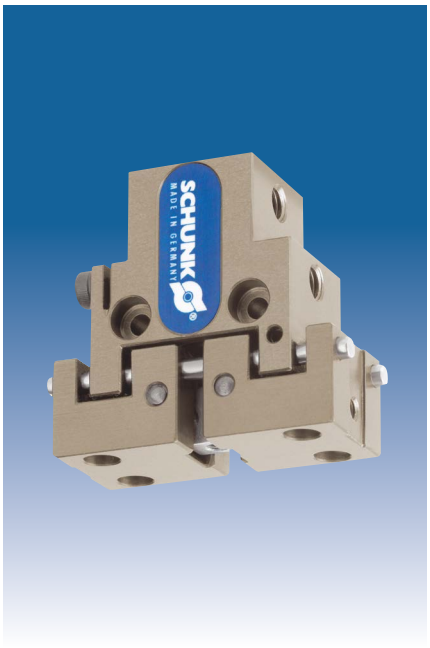

## Gripping force, I.D. gripping

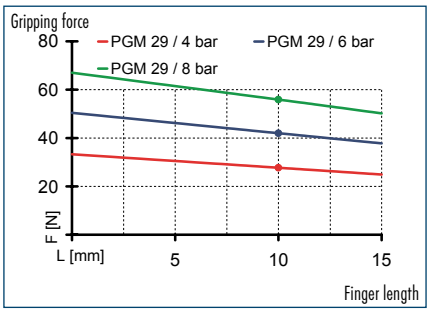


## Gripping force, O.D. gripping

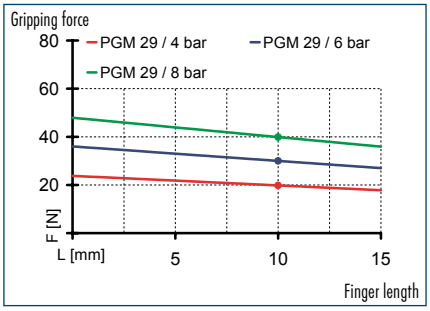


## Finger load

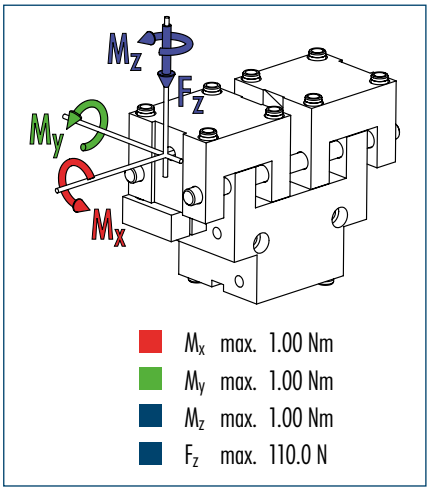


ⓘ The indicated moments and forces are static values, apply per base jaw and may occur simultaneously. $M_y$ may arise in addition to the moment generated by the gripping force itself. If the max. permitted finger weight is exceeded, it is imperative to throttle the air pressure so that the jaw movement occurs without any hitting or bouncing. Service life may be reduced.

## Technical data

| Description | | PGM 29 |
|---|---|---|
| **ID** | | **0302680** |
| Stroke per finger | [mm] | 2 |
| Closing force | [N] | 30 |
| Opening force | [N] | 40 |
| Weight | [kg] | 0.025 |
| Recommended workpiece weight | [kg] | 0.15 |
| Air consumption per double stroke | [cm³] | 0.16 |
| Min./max. operating pressure | [bar] | 2/8 |
| Nominal operating pressure | [bar] | 6 |
| Closing/opening time | [s] | 0.03/0.03 |
| Max. permitted finger length | [mm] | 15 |
| Max. permitted weight per finger | [kg] | 0.01 |
| IP class | | 30 |
| Min./max. ambient temperature | [°C] | -10/90 |
| Repeat accuracy | [mm] | 0.02 |

## Main view

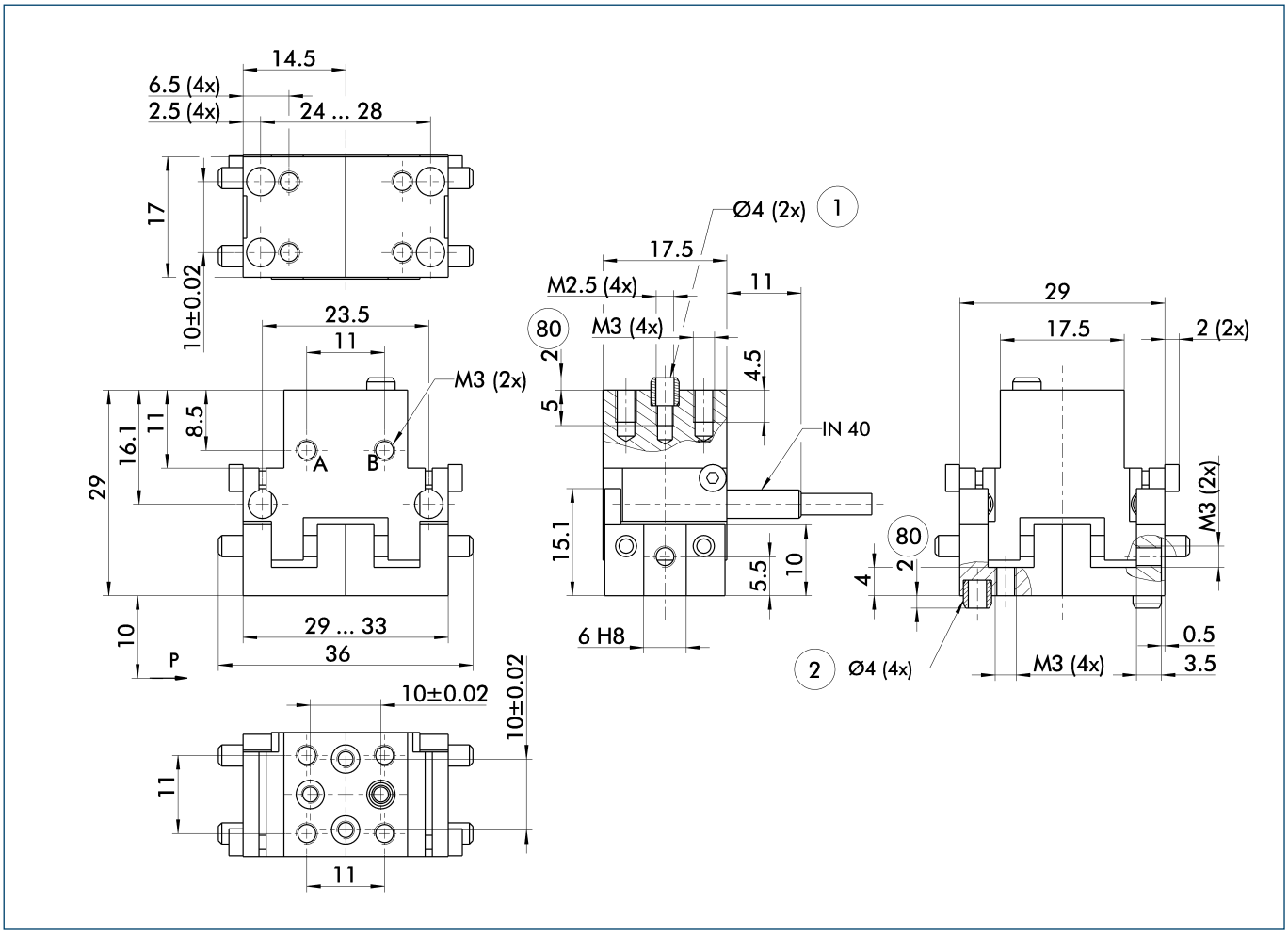


The drawing shows the gripper in the basic version with closed jaws, the dimensions do not include the options described below.

ⓘ The SDV-P pressure maintenance valve can be used as a gripping force maintenance device (see "Accessories" catalog section).

A, a Main/direct connection, gripper opening
B, b Main/direct connection, gripper closing
① Gripper connection
② Finger connection
80 Depth of the centering sleeve hole in the matching part

## Maximum permitted finger projection

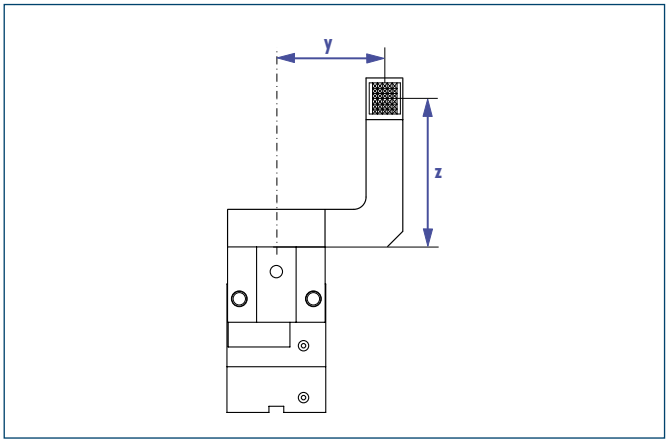


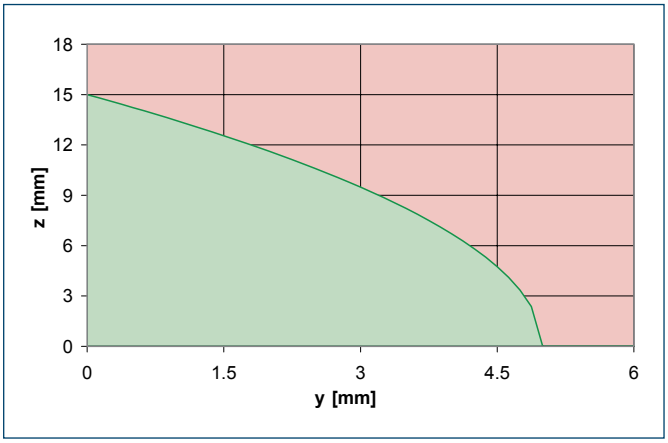


Permitted range
Inadmissible range

## Inductive proximity switches

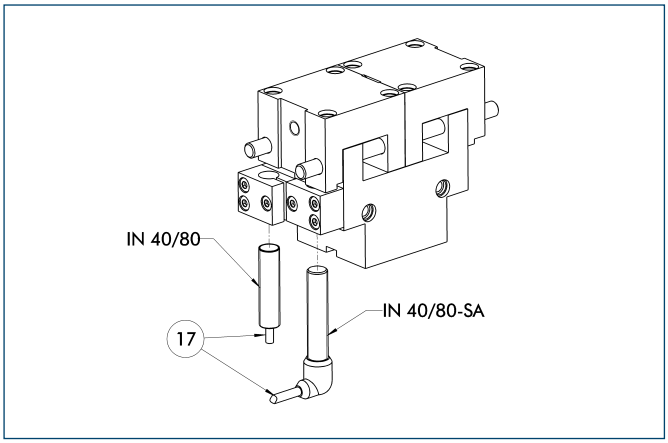


⑰ Cable outlet

End position monitoring for direct mounting

| Description | ID | Recommended product |
|---|---|---|
| Inductive proximity switches | | |
| IN 40-S-M8 | **0301474** | • |
| IN 40-S-M12 | **0301574** | |
| INK 40-S | **0301555** | |
| IN 40-S-M5-PNP | **0301491** | |
| IN 40-S-M5-NPN | **0301492** | |
| Inductive proximity switch with lateral outlet | | |
| IN 40-S-M12-SA | **0301577** | |
| IN 40-S-M8-SA | **0301473** | • |
| INK 40-S-SA | **0301565** | |
| Connection cables | | |
| KA BG05-L 3P-0300 | **0301652** | |
| KA BG08-L 3P-0300-PNP | **0301622** | |
| KA BG08-L 3P-0500-PNP | **0301623** | |
| KA BG12-L 3P-0500-PNP | **30016369** | |
| KA BW05-L 3P-0300 | **0301650** | |
| KA BW08-L 3P-0300-PNP | **0301594** | |
| KA BW08-L 3P-0500-PNP | **0301502** | |
| KA BW12-L 3P-0300-PNP | **0301503** | |
| KA BW12-L 3P-0500-PNP | **0301507** | |
| Cable extensions | | |
| KV BG12-SG12 3P-0030-PNP | **0301999** | |
| KV BG12-SG12 3P-0060-PNP | **0301998** | |
| KV BW08-SG08 3P-0030-PNP | **0301495** | |
| KV BW08-SG08 3P-0100-PNP | **0301496** | |
| KV BW08-SG08 3P-0200-PNP | **0301497** | |
| KV BW12-SG12 3P-0030-PNP | **0301595** | |
| KV BW12-SG12 3P-0100-PNP | **0301596** | |
| KV BW12-SG12 3P-0200-PNP | **0301597** | |

ⓘ Two sensors (closer/NO) are required for each gripper, plus extension cables as an option.

ⓘ Please note the minimum permitted bending radii for the sensor cables, which are generally 35 mm.

You can find more detailed information and individual parts of the above-mentioned accessories in the “Accessories” catalog section.

# PGM 38

**Pneumatic • 2-Finger Parallel Gripper • Universal Gripper**

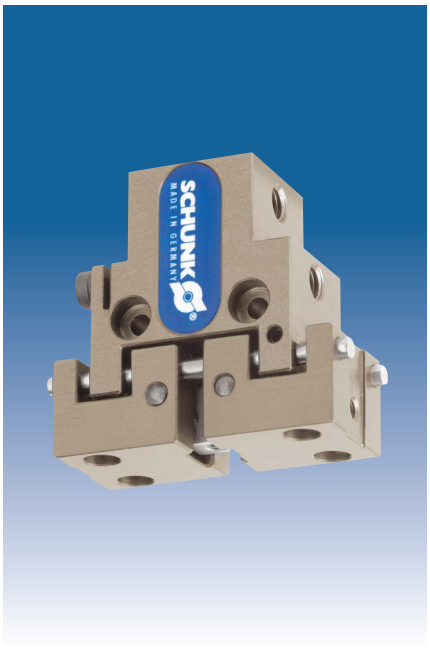


## Gripping force, I.D. gripping

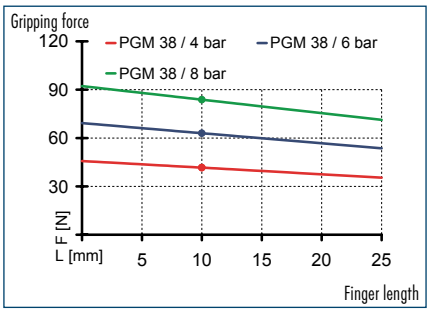


## Gripping force, O.D. gripping

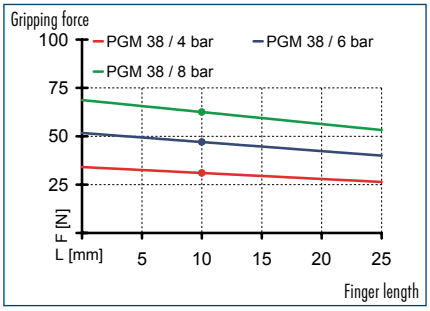


## Finger load

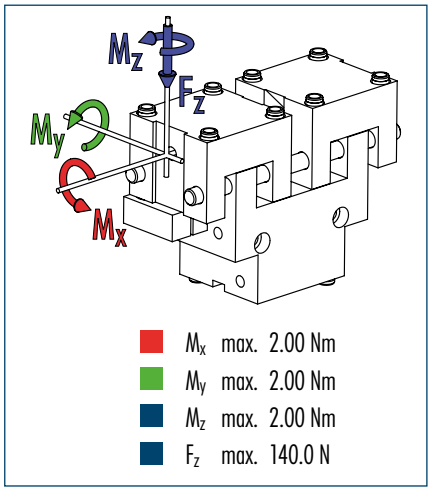


ⓘ The indicated moments and forces are static values, apply per base jaw and may occur simultaneously. $M_y$ may arise in addition to the moment generated by the gripping force itself. If the max. permitted finger weight is exceeded, it is imperative to throttle the air pressure so that the jaw movement occurs without any hitting or bouncing. Service life may be reduced.

## Technical data

| Description | | PGM 38 |
|---|---|---|
| **ID** | | **0302681** |
| Stroke per finger | [mm] | 3 |
| Closing force | [N] | 47 |
| Opening force | [N] | 63 |
| Weight | [kg] | 0.05 |
| Recommended workpiece weight | [kg] | 0.235 |
| Air consumption per double stroke | [cm³] | 0.34 |
| Min./max. operating pressure | [bar] | 2/8 |
| Nominal operating pressure | [bar] | 6 |
| Closing/opening time | [s] | 0.03/0.03 |
| Max. permitted finger length | [mm] | 25 |
| Max. permitted weight per finger | [kg] | 0.017 |
| IP class | | 30 |
| Min./max. ambient temperature | [°C] | -10/90 |
| Repeat accuracy | [mm] | 0.02 |

## Main view

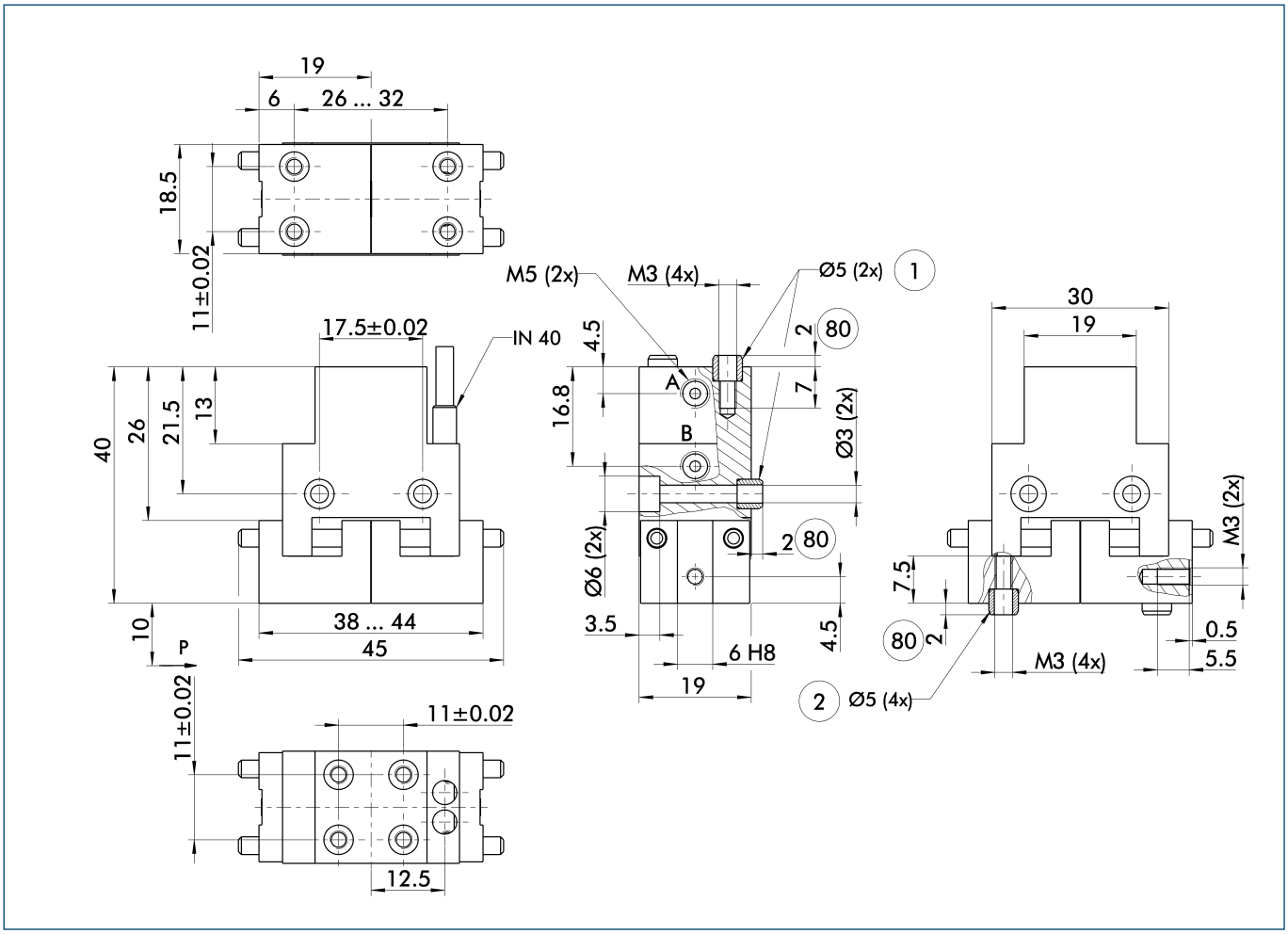


The drawing shows the gripper in the basic version with closed jaws, the dimensions do not include the options described below.

ⓘ The SDV-P pressure maintenance valve can be used as a gripping force maintenance device (see "Accessories" catalog section).

A, a Main/direct connection, gripper opening
B, b Main/direct connection, gripper closing
① Gripper connection
② Finger connection
(80) Depth of the centering sleeve hole in the matching part

## Maximum permitted finger projection

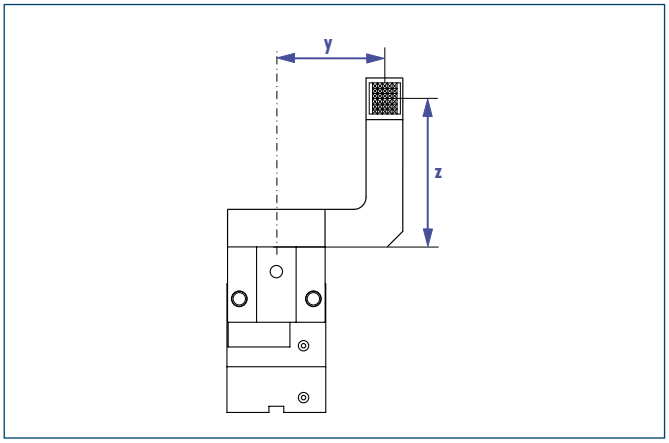


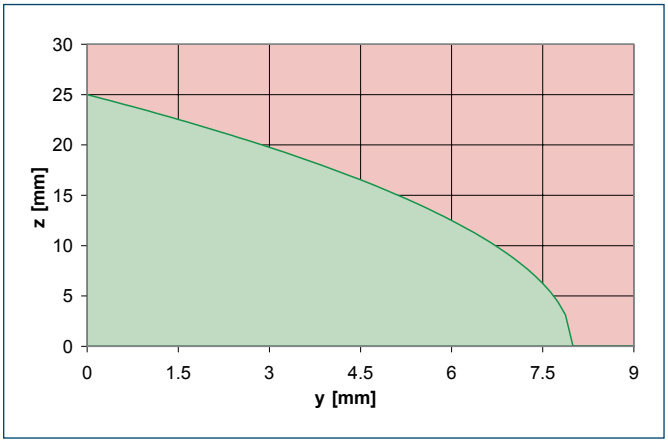


Permitted range
Inadmissible range

## Inductive proximity switches

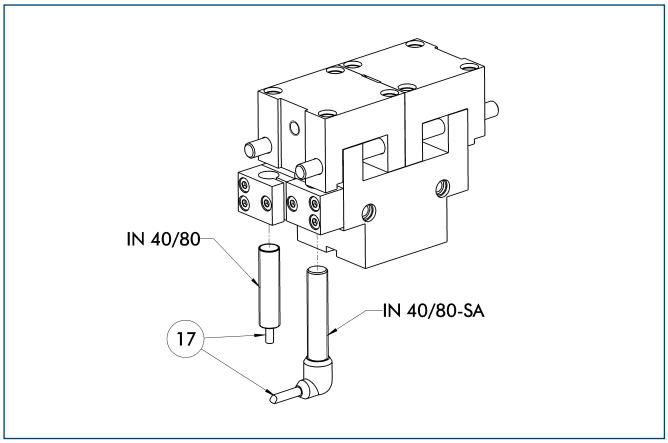


⑰ Cable outlet

End position monitoring for direct mounting

| Description | ID | Recommended product |
|---|---|---|
| Inductive proximity switches | | |
| IN 40-S-M8 | **0301474** | • |
| IN 40-S-M12 | **0301574** | |
| INK 40-S | **0301555** | |
| IN 40-S-M5-PNP | **0301491** | |
| IN 40-S-M5-NPN | **0301492** | |
| Inductive proximity switch with lateral outlet | | |
| IN 40-S-M12-SA | **0301577** | |
| IN 40-S-M8-SA | **0301473** | • |
| INK 40-S-SA | **0301565** | |
| Connection cables | | |
| KA BG05-L 3P-0300 | **0301652** | |
| KA BG08-L 3P-0300-PNP | **0301622** | |
| KA BG08-L 3P-0500-PNP | **0301623** | |
| KA BG12-L 3P-0500-PNP | **30016369** | |
| KA BW05-L 3P-0300 | **0301650** | |
| KA BW08-L 3P-0300-PNP | **0301594** | |
| KA BW08-L 3P-0500-PNP | **0301502** | |
| KA BW12-L 3P-0300-PNP | **0301503** | |
| KA BW12-L 3P-0500-PNP | **0301507** | |
| Cable extensions | | |
| KV BG12-SG12 3P-0030-PNP | **0301999** | |
| KV BG12-SG12 3P-0060-PNP | **0301998** | |
| KV BW08-SG08 3P-0030-PNP | **0301495** | |
| KV BW08-SG08 3P-0100-PNP | **0301496** | |
| KV BW08-SG08 3P-0200-PNP | **0301497** | |
| KV BW12-SG12 3P-0030-PNP | **0301595** | |
| KV BW12-SG12 3P-0100-PNP | **0301596** | |
| KV BW12-SG12 3P-0200-PNP | **0301597** | |

ⓘ Two sensors (closer/NO) are required for each gripper, plus extension cables as an option.

ⓘ Please note the minimum permitted bending radii for the sensor cables, which are generally 35 mm.

You can find more detailed information and individual parts of the above-mentioned accessories in the “Accessories” catalog section.

# PGM 50

**Pneumatic • 2-Finger Parallel Gripper • Universal Gripper**

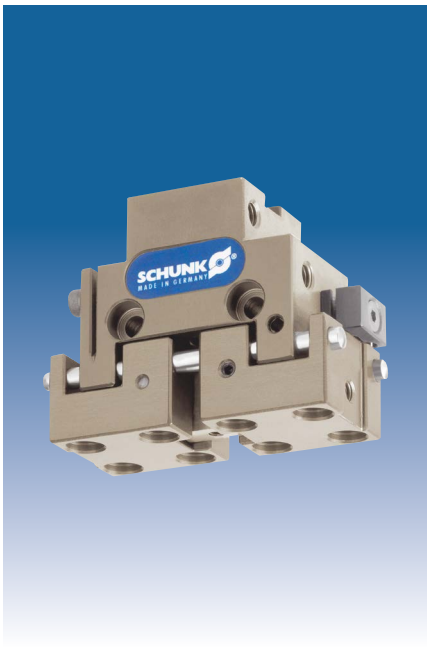

## Gripping force, I.D. gripping

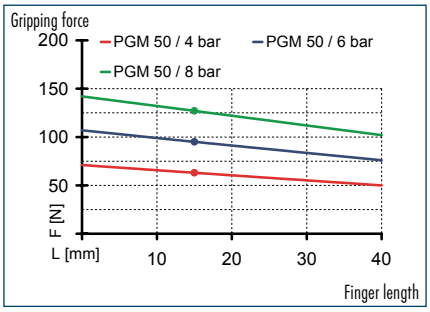


## Gripping force, O.D. gripping

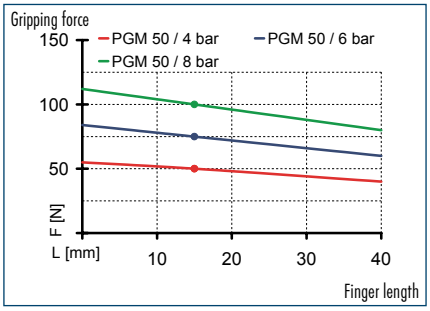


## Finger load

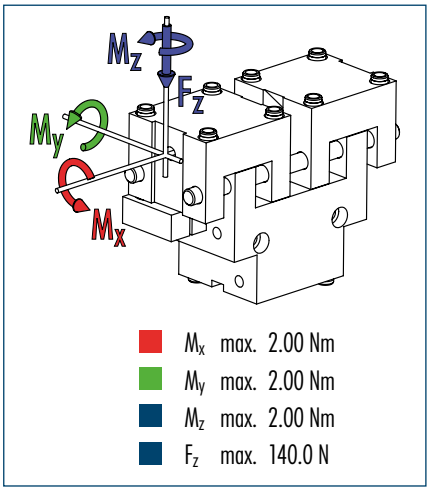


ⓘ The indicated moments and forces are static values, apply per base jaw and may occur simultaneously. $M_y$ may arise in addition to the moment generated by the gripping force itself. If the max. permitted finger weight is exceeded, it is imperative to throttle the air pressure so that the jaw movement occurs without any hitting or bouncing. Service life may be reduced.

## Technical data

| Description | | PGM 50 |
|---|---|---|
| **ID** | | **0302682** |
| Stroke per finger | [mm] | 4 |
| Closing force | [N] | 75 |
| Opening force | [N] | 95 |
| Weight | [kg] | 0.105 |
| Recommended workpiece weight | [kg] | 0.375 |
| Air consumption per double stroke | [cm³] | 0.8 |
| Min./max. operating pressure | [bar] | 2/8 |
| Nominal operating pressure | [bar] | 6 |
| Closing/opening time | [s] | 0.04/0.04 |
| Max. permitted finger length | [mm] | 40 |
| Max. permitted weight per finger | [kg] | 0.035 |
| IP class | | 30 |
| Min./max. ambient temperature | [°C] | -10/90 |
| Repeat accuracy | [mm] | 0.02 |

## Main view

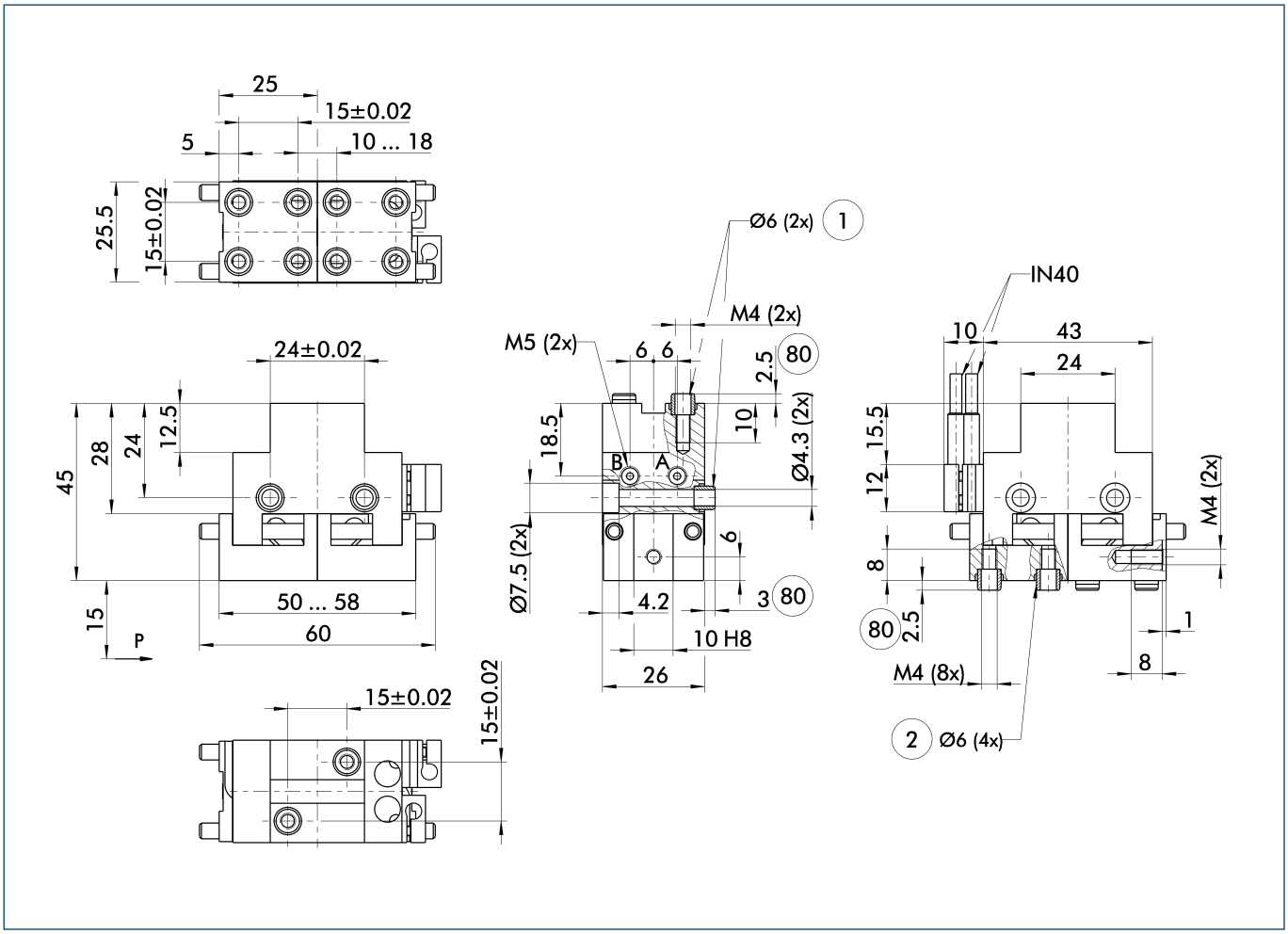


The drawing shows the gripper in the basic version with closed jaws, the dimensions do not include the options described below.

ⓘ The SDV-P pressure maintenance valve can be used as a gripping force maintenance device (see "Accessories" catalog section).

A, a Main/direct connection, gripper opening
B, b Main/direct connection, gripper closing
① Gripper connection
② Finger connection
80 Depth of the centering sleeve hole in the matching part

## Maximum permitted finger projection

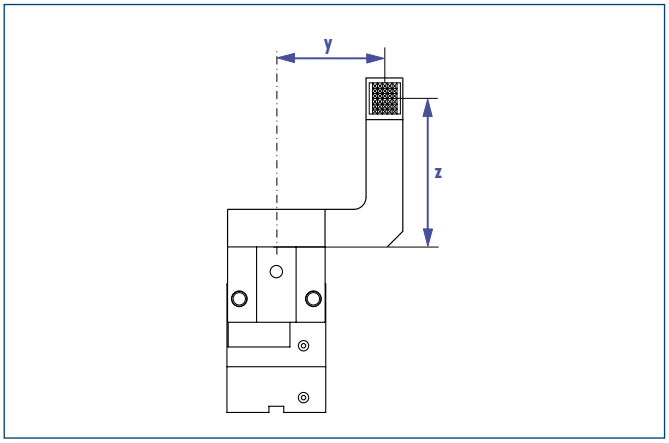


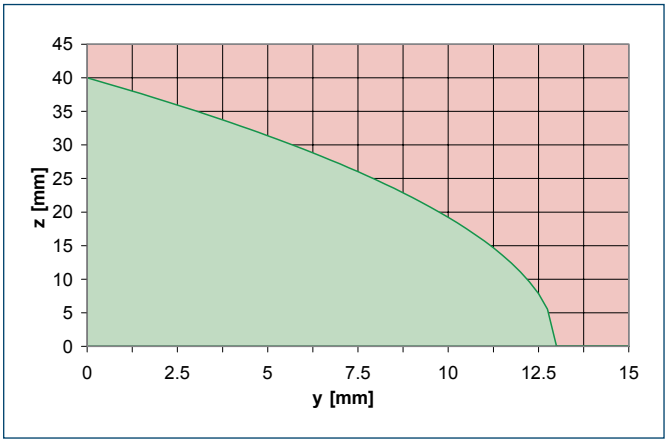


Permitted range
Inadmissible range

## Inductive proximity switches

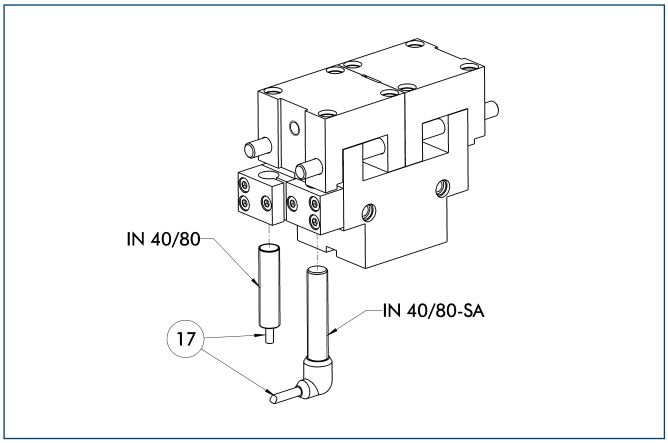


⑰ Cable outlet

End position monitoring for direct mounting

| Description | ID | Recommended product |
|---|---|---|
| Inductive proximity switches | | |
| IN 40-S-M8 | **0301474** | • |
| IN 40-S-M12 | **0301574** | |
| INK 40-S | **0301555** | |
| IN 40-S-M5-PNP | **0301491** | |
| IN 40-S-M5-NPN | **0301492** | |
| Inductive proximity switch with lateral outlet | | |
| IN 40-S-M12-SA | **0301577** | |
| IN 40-S-M8-SA | **0301473** | • |
| INK 40-S-SA | **0301565** | |
| Connection cables | | |
| KA BG05-L 3P-0300 | **0301652** | |
| KA BG08-L 3P-0300-PNP | **0301622** | |
| KA BG08-L 3P-0500-PNP | **0301623** | |
| KA BG12-L 3P-0500-PNP | **30016369** | |
| KA BW05-L 3P-0300 | **0301650** | |
| KA BW08-L 3P-0300-PNP | **0301594** | |
| KA BW08-L 3P-0500-PNP | **0301502** | |
| KA BW12-L 3P-0300-PNP | **0301503** | |
| KA BW12-L 3P-0500-PNP | **0301507** | |
| Cable extensions | | |
| KV BG12-SG12 3P-0030-PNP | **0301999** | |
| KV BG12-SG12 3P-0060-PNP | **0301998** | |
| KV BW08-SG08 3P-0030-PNP | **0301495** | |
| KV BW08-SG08 3P-0100-PNP | **0301496** | |
| KV BW08-SG08 3P-0200-PNP | **0301497** | |
| KV BW12-SG12 3P-0030-PNP | **0301595** | |
| KV BW12-SG12 3P-0100-PNP | **0301596** | |
| KV BW12-SG12 3P-0200-PNP | **0301597** | |

ⓘ Two sensors (closer/NO) are required for each gripper, plus extension cables as an option.

ⓘ Please note the minimum permitted bending radii for the sensor cables, which are generally 35 mm.

You can find more detailed information and individual parts of the above-mentioned accessories in the “Accessories” catalog section.

# PGM 60

**Pneumatic • 2-Finger Parallel Gripper • Universal Gripper**

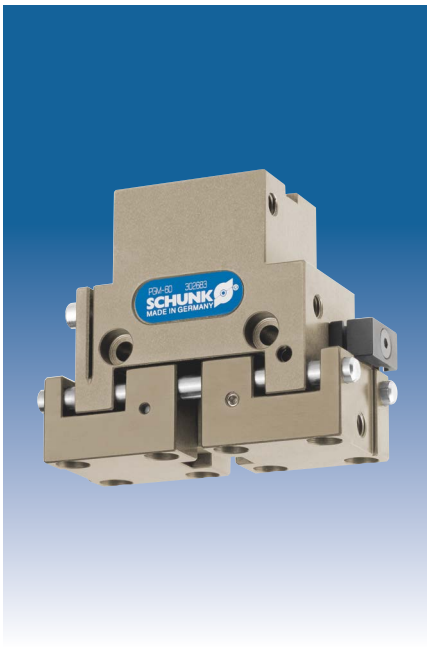

## Gripping force, I.D. gripping

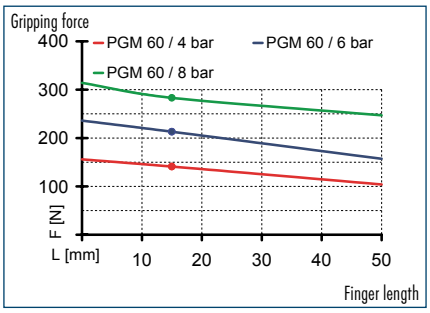


## Gripping force, O.D. gripping

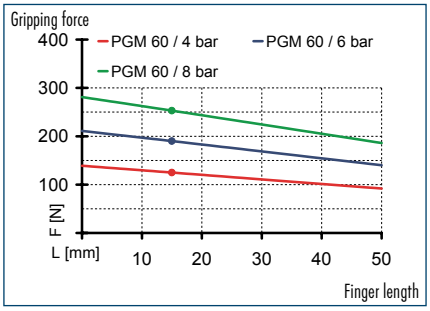


## Finger load

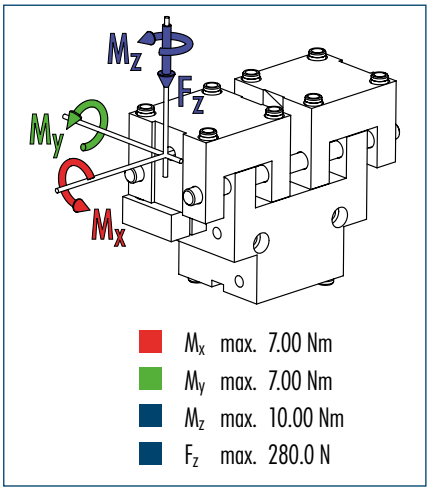


ⓘ The indicated moments and forces are static values, apply per base jaw and may occur simultaneously. $M_y$ may arise in addition to the moment generated by the gripping force itself. If the max. permitted finger weight is exceeded, it is imperative to throttle the air pressure so that the jaw movement occurs without any hitting or bouncing. Service life may be reduced.

## Technical data

| Description | | PGM 60 |
|---|---|---|
| **ID** | | **0302683** |
| Stroke per finger | [mm] | 5 |
| Closing force | [N] | 190 |
| Opening force | [N] | 210 |
| Weight | [kg] | 0.21 |
| Recommended workpiece weight | [kg] | 0.95 |
| Air consumption per double stroke | [cm³] | 2.5 |
| Min./max. operating pressure | [bar] | 2/8 |
| Nominal operating pressure | [bar] | 6 |
| Closing/opening time | [s] | 0.05/0.05 |
| Max. permitted finger length | [mm] | 50 |
| Max. permitted weight per finger | [kg] | 0.07 |
| IP class | | 30 |
| Min./max. ambient temperature | [°C] | -10/90 |
| Repeat accuracy | [mm] | 0.02 |

## Main view

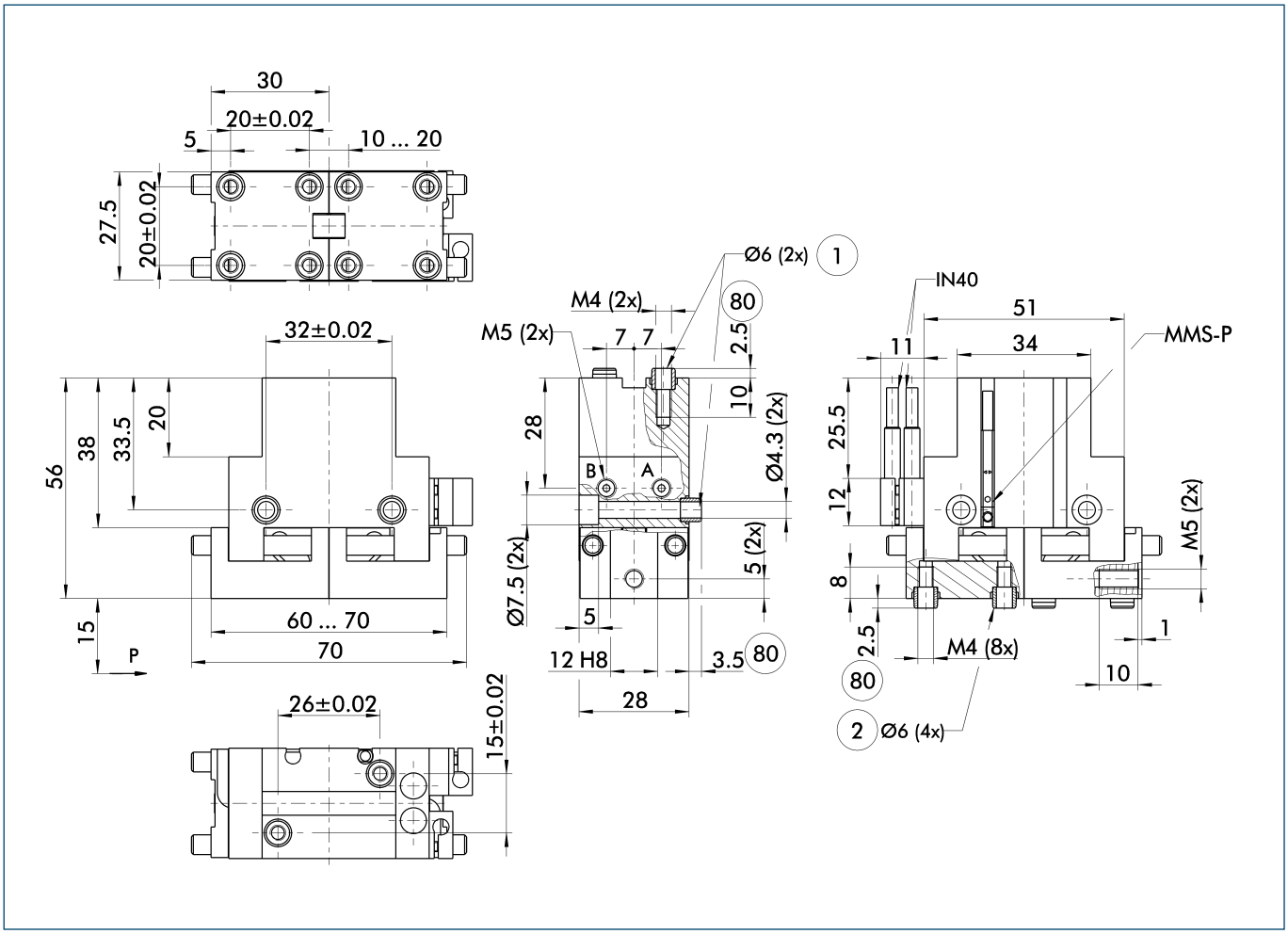


The drawing shows the gripper in the basic version with closed jaws, the dimensions do not include the options described below.

ⓘ The SDV-P pressure maintenance valve can be used as a gripping force maintenance device (see "Accessories" catalog section).

A, a Main/direct connection, gripper opening
B, b Main/direct connection, gripper closing
① Gripper connection
② Finger connection
(80) Depth of the centering sleeve hole in the matching part

## Maximum permitted finger projection

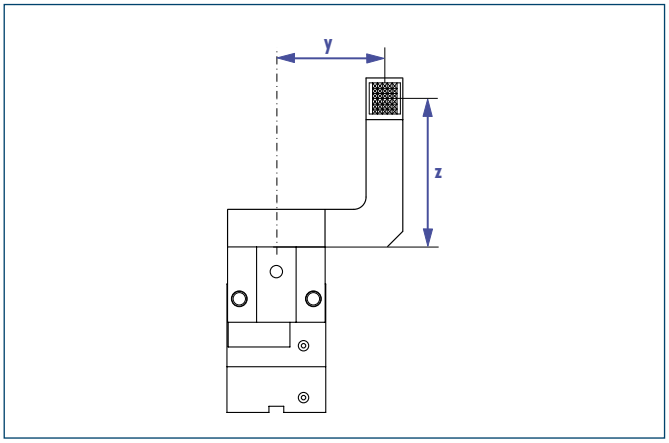


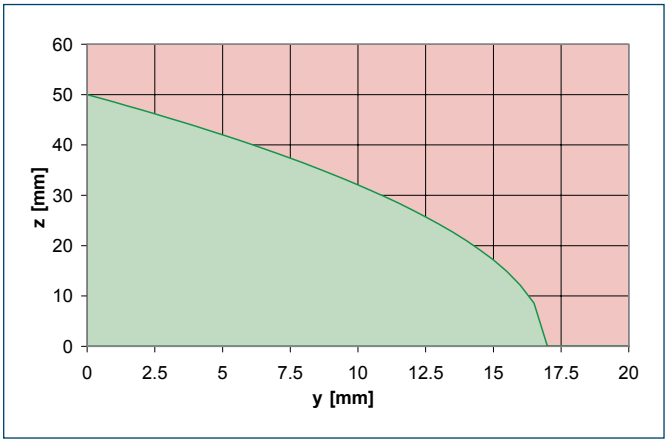


Permitted range
Inadmissible range

## Programmable magnetic switch

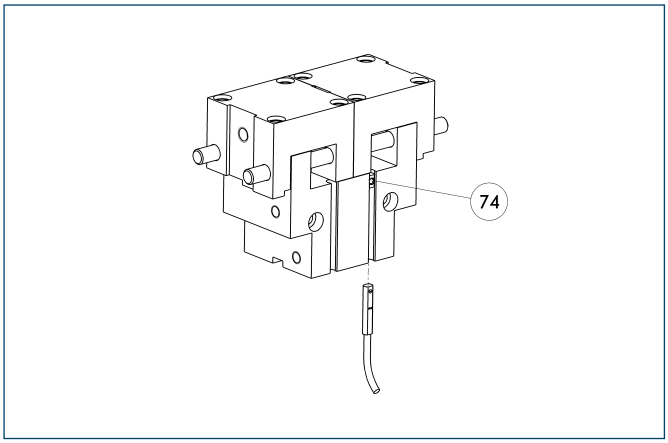


(74) Stop for MMS-P

Position monitoring with two programmable positions per sensor. The end position monitoring is mounted in the C-slot.

| Description | ID | Recommended product |
|---|---|---|
| Programmable magnetic switch | | |
| MMS-P 22-S-M8-PNP | **0301370** | • |
| MMSK-P 22-S-PNP | **0301371** | |
| Connection cables | | |
| KA BG08-L 4P-0500 | **0307767** | |
| KA BG08-L 4P-1000 | **0307768** | |
| KA BW08-L 4P-0500 | **0307765** | |
| KA BW08-L 4P-1000 | **0307766** | |
| Sensor Distributor | | |
| V2-M8-4P-2XM8-3P | **0301380** | |

ⓘ Please note the minimum permitted bending radii for the sensor cables, which are generally 35 mm.

ⓘ Per gripper one sensor (closer/NO) is required, optionally a cable extension.

## Inductive proximity switches

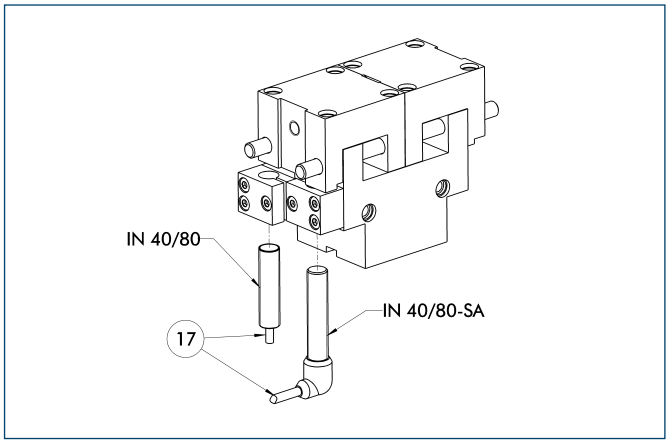


(17) Cable outlet

End position monitoring for direct mounting

| Description | ID | Recommended product |
|---|---|---|
| Inductive proximity switches | | |
| IN 40-S-M8 | **0301474** | • |
| IN 40-S-M12 | **0301574** | |
| INK 40-S | **0301555** | |
| IN 40-S-M5-PNP | **0301491** | |
| IN 40-S-M5-NPN | **0301492** | |
| Inductive proximity switch with lateral outlet | | |
| IN 40-S-M12-SA | **0301577** | |
| IN 40-S-M8-SA | **0301473** | • |
| INK 40-S-SA | **0301565** | |
| Connection cables | | |
| KA BG05-L 3P-0300 | **0301652** | |
| KA BG08-L 3P-0300-PNP | **0301622** | |
| KA BG08-L 3P-0500-PNP | **0301623** | |
| KA BG12-L 3P-0500-PNP | **30016369** | |
| KA BW05-L 3P-0300 | **0301650** | |
| KA BW08-L 3P-0300-PNP | **0301594** | |
| KA BW08-L 3P-0500-PNP | **0301502** | |
| KA BW12-L 3P-0300-PNP | **0301503** | |
| KA BW12-L 3P-0500-PNP | **0301507** | |
| Cable extensions | | |
| KV BG12-SG12 3P-0030-PNP | **0301999** | |
| KV BG12-SG12 3P-0060-PNP | **0301998** | |
| KV BW08-SG08 3P-0030-PNP | **0301495** | |
| KV BW08-SG08 3P-0100-PNP | **0301496** | |
| KV BW08-SG08 3P-0200-PNP | **0301497** | |
| KV BW12-SG12 3P-0030-PNP | **0301595** | |
| KV BW12-SG12 3P-0100-PNP | **0301596** | |
| KV BW12-SG12 3P-0200-PNP | **0301597** | |

ⓘ Two sensors (closer/NO) are required for each gripper, plus extension cables as an option.

ⓘ Please note the minimum permitted bending radii for the sensor cables, which are generally 35 mm.

You can find more detailed information and individual parts of the above-mentioned accessories in the “Accessories” catalog section.

# PGM 82

**Pneumatic • 2-Finger Parallel Gripper • Universal Gripper**

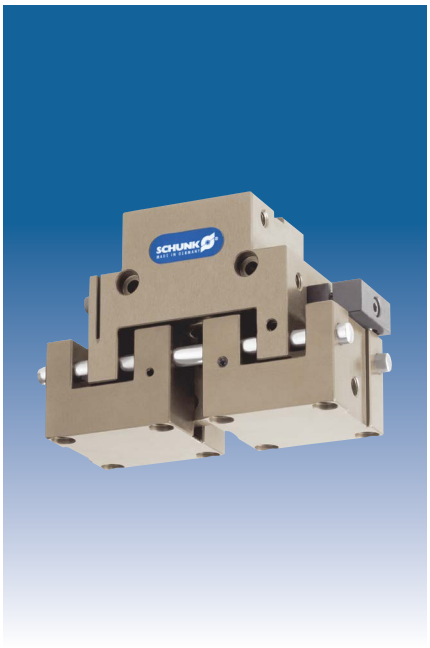

## Gripping force, I.D. gripping

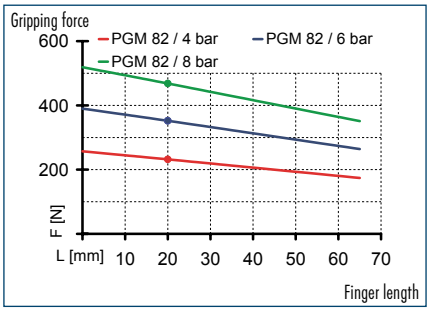


## Gripping force, O.D. gripping

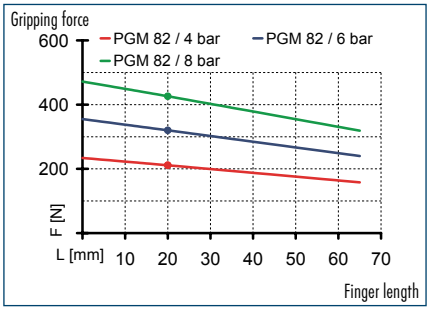


## Finger load

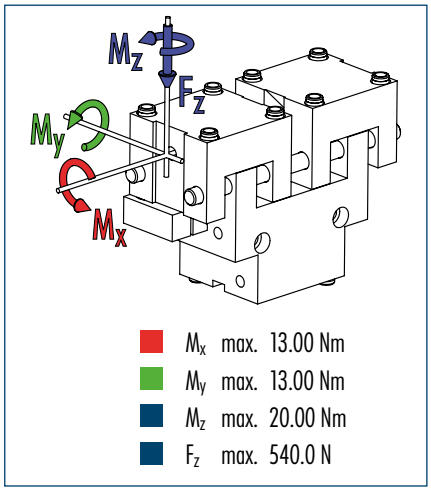


ⓘ The indicated moments and forces are static values, apply per base jaw and may occur simultaneously. $M_y$ may arise in addition to the moment generated by the gripping force itself. If the max. permitted finger weight is exceeded, it is imperative to throttle the air pressure so that the jaw movement occurs without any hitting or bouncing. Service life may be reduced.

## Technical data

| Description | | PGM 82 |
|---|---|---|
| **ID** | | **0302684** |
| Stroke per finger | [mm] | 10 |
| Closing force | [N] | 320 |
| Opening force | [N] | 350 |
| Weight | [kg] | 0.6 |
| Recommended workpiece weight | [kg] | 1.6 |
| Air consumption per double stroke | [cm³] | 8 |
| Min./max. operating pressure | [bar] | 2/8 |
| Nominal operating pressure | [bar] | 6 |
| Closing/opening time | [s] | 0.07/0.07 |
| Max. permitted finger length | [mm] | 65 |
| Max. permitted weight per finger | [kg] | 0.17 |
| IP class | | 30 |
| Min./max. ambient temperature | [°C] | -10/90 |
| Repeat accuracy | [mm] | 0.03 |

## Main view

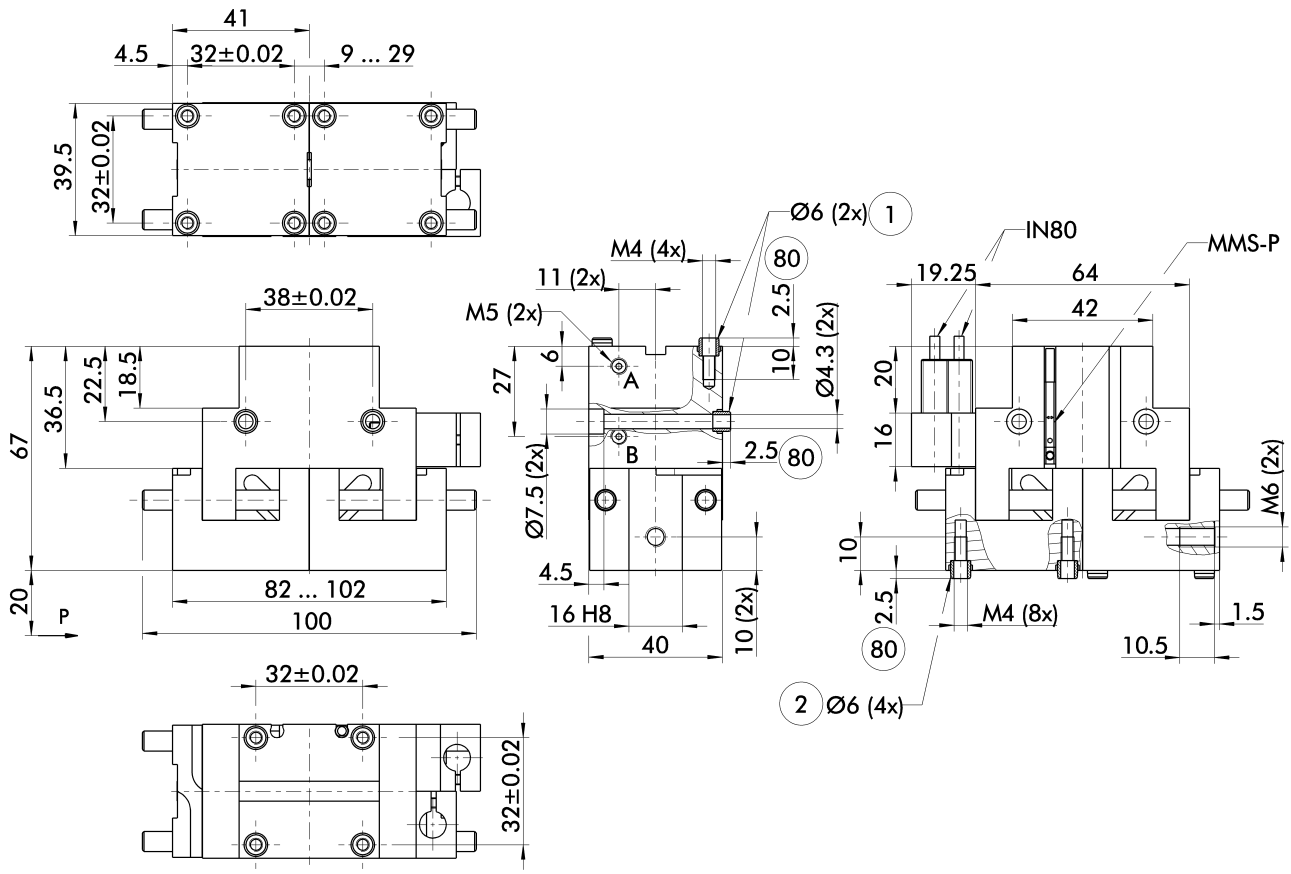


The drawing shows the gripper in the basic version with closed jaws, the dimensions do not include the options described below.

ⓘ The SDV-P pressure maintenance valve can be used as a gripping force maintenance device (see "Accessories" catalog section).

A, a Main/direct connection, gripper opening
B, b Main/direct connection, gripper closing
① Gripper connection
② Finger connection
(80) Depth of the centering sleeve hole in the matching part

## Maximum permitted finger projection

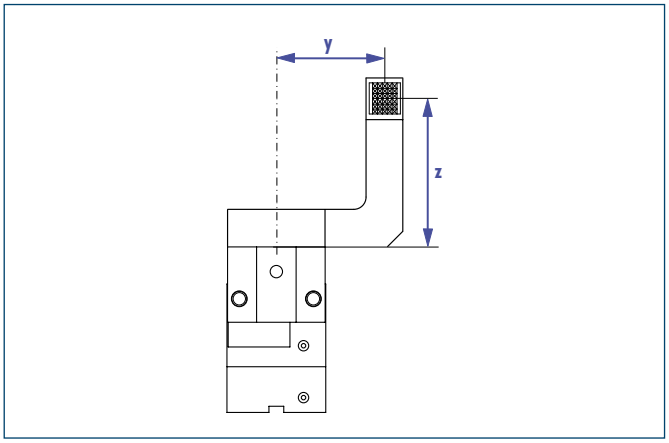


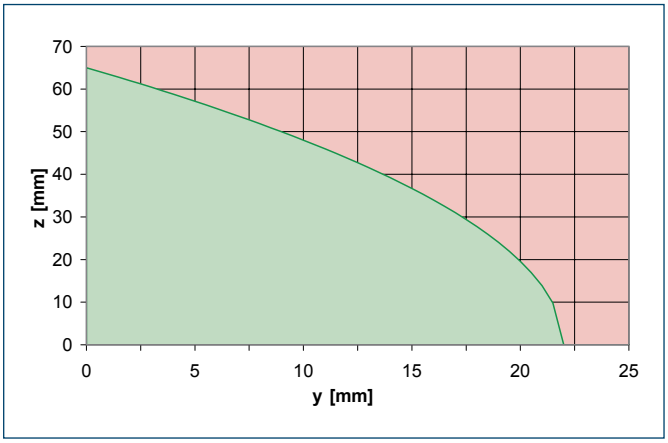


Permitted range
Inadmissible range

## Programmable magnetic switch

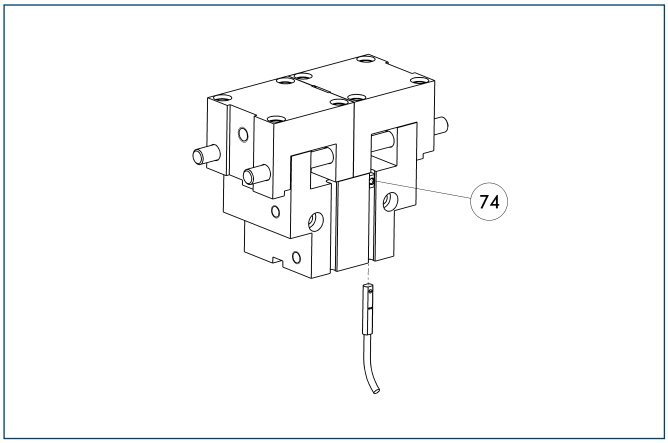


(74) Stop for MMS-P

Position monitoring with two programmable positions per sensor. The end position monitoring is mounted in the C-slot.

| Description | ID | Recommended product |
|---|---|---|
| Programmable magnetic switch | | |
| MMS-P 22-S-M8-PNP | **0301370** | • |
| MMSK-P 22-S-PNP | **0301371** | |
| Connection cables | | |
| KA BG08-L 4P-0500 | **0307767** | |
| KA BG08-L 4P-1000 | **0307768** | |
| KA BW08-L 4P-0500 | **0307765** | |
| KA BW08-L 4P-1000 | **0307766** | |
| Sensor Distributor | | |
| V2-M8-4P-2XM8-3P | **0301380** | |

ⓘ Please note the minimum permitted bending radii for the sensor cables, which are generally 35 mm.

ⓘ Per gripper one sensor (closer/NO) is required, optionally a cable extension.

## Inductive proximity switches

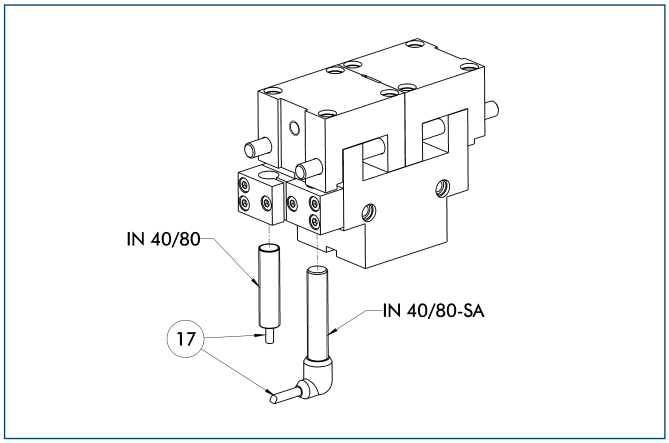


(17) Cable outlet

End position monitoring for direct mounting

| Description | ID | Recommended product |
|---|---|---|
| Inductive proximity switches | | |
| IN 80-S-M8 | **0301478** | • |
| IN 80-S-M12 | **0301578** | |
| INK 80-S | **0301550** | |
| Inductive proximity switch with lateral outlet | | |
| IN 80-S-M12-SA | **0301587** | |
| IN 80-S-M8-SA | **0301483** | • |
| INK 80-S-SA | **0301566** | |
| Connection cables | | |
| KA BG08-L 3P-0300-PNP | **0301622** | |
| KA BG08-L 3P-0500-PNP | **0301623** | |
| KA BG12-L 3P-0500-PNP | **30016369** | |
| KA BW08-L 3P-0300-PNP | **0301594** | |
| KA BW08-L 3P-0500-PNP | **0301502** | |
| KA BW12-L 3P-0300-PNP | **0301503** | |
| KA BW12-L 3P-0500-PNP | **0301507** | |
| Cable extensions | | |
| KV BG12-SG12 3P-0030-PNP | **0301999** | |
| KV BG12-SG12 3P-0060-PNP | **0301998** | |
| KV BW08-SG08 3P-0030-PNP | **0301495** | |
| KV BW08-SG08 3P-0100-PNP | **0301496** | |
| KV BW08-SG08 3P-0200-PNP | **0301497** | |
| KV BW12-SG12 3P-0030-PNP | **0301595** | |
| KV BW12-SG12 3P-0100-PNP | **0301596** | |
| KV BW12-SG12 3P-0200-PNP | **0301597** | |

ⓘ Two sensors (closer/NO) are required for each gripper, plus extension cables as an option.

ⓘ Please note the minimum permitted bending radii for the sensor cables, which are generally 35 mm.

You can find more detailed information and individual parts of the above-mentioned accessories in the “Accessories” catalog section.

# PGM 96

**Pneumatic • 2-Finger Parallel Gripper • Universal Gripper**



## Gripping force, I.D. gripping

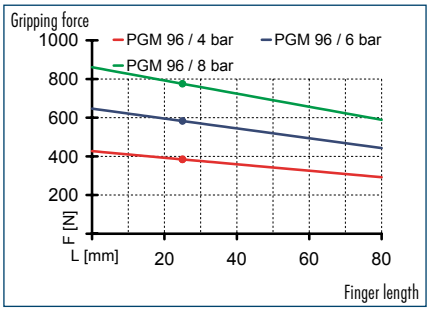


## Gripping force, O.D. gripping

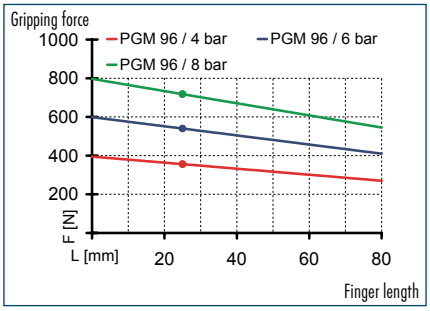


## Finger load

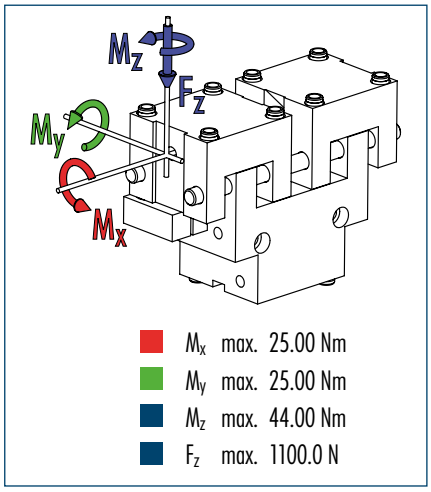


ⓘ The indicated moments and forces are static values, apply per base jaw and may occur simultaneously. $M_y$ may arise in addition to the moment generated by the gripping force itself. If the max. permitted finger weight is exceeded, it is imperative to throttle the air pressure so that the jaw movement occurs without any hitting or bouncing. Service life may be reduced.

## Technical data

| Description | | PGM 96 |
|---|---|---|
| **ID** | | **0302685** |
| Stroke per finger | [mm] | 12 |
| Closing force | [N] | 540 |
| Opening force | [N] | 580 |
| Weight | [kg] | 0.84 |
| Recommended workpiece weight | [kg] | 2.7 |
| Air consumption per double stroke | [cm³] | 15.1 |
| Min./max. operating pressure | [bar] | 2/8 |
| Nominal operating pressure | [bar] | 6 |
| Closing/opening time | [s] | 0.08/0.08 |
| Max. permitted finger length | [mm] | 80 |
| Max. permitted weight per finger | [kg] | 0.28 |
| IP class | | 30 |
| Min./max. ambient temperature | [°C] | -10/90 |
| Repeat accuracy | [mm] | 0.03 |

## Main view

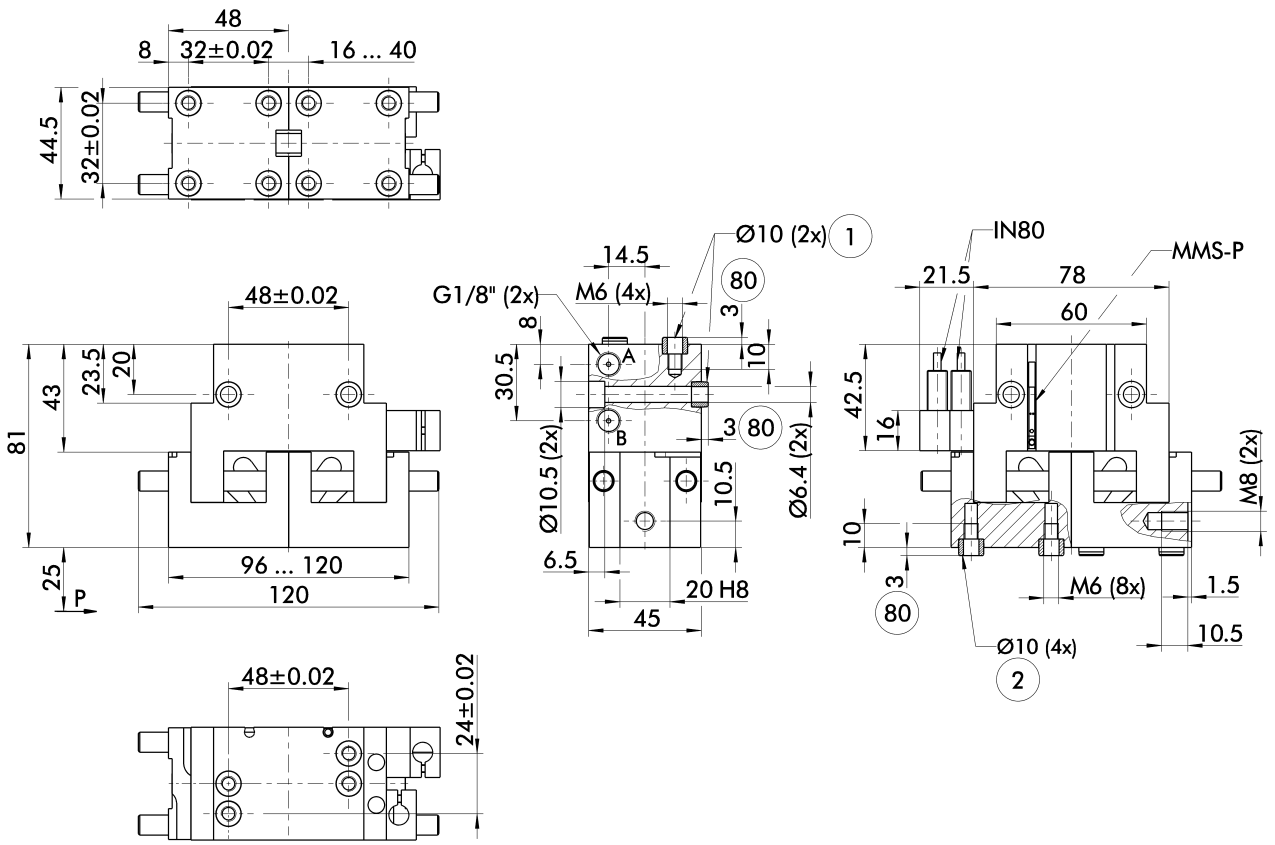


The drawing shows the gripper in the basic version with closed jaws, the dimensions do not include the options described below.

ⓘ The SDV-P pressure maintenance valve can be used as a gripping force maintenance device (see "Accessories" catalog section).

A, a Main/direct connection, gripper opening
B, b Main/direct connection, gripper closing
① Gripper connection
② Finger connection
(80) Depth of the centering sleeve hole in the matching part

## Maximum permitted finger projection

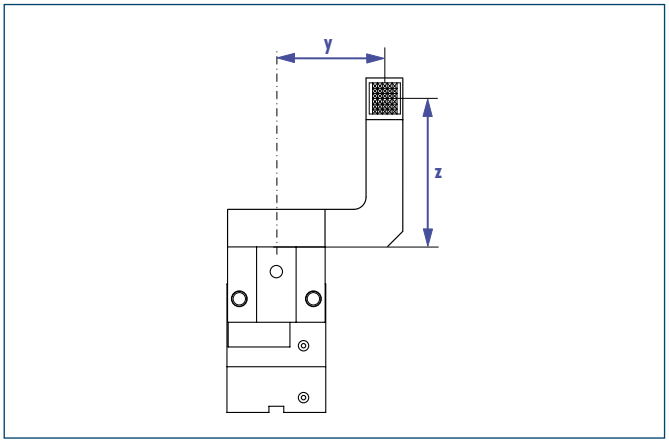


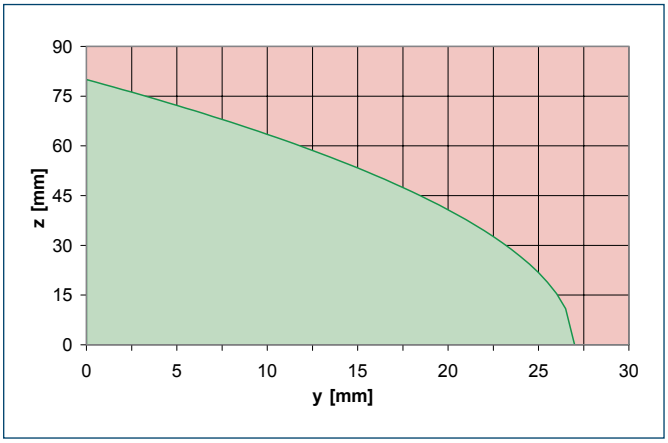


Permitted range
Inadmissible range

## Programmable magnetic switch

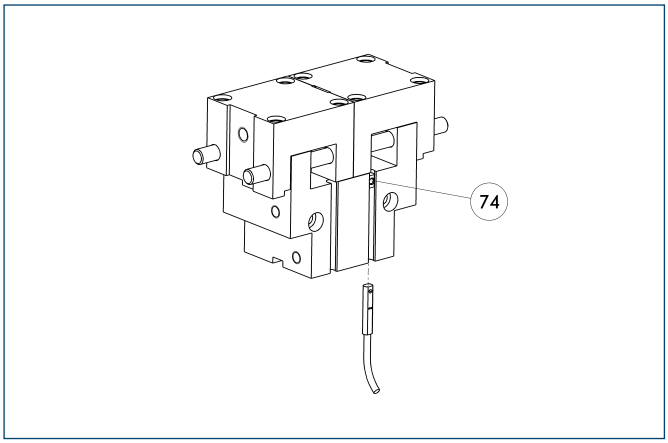


(74) Stop for MMS-P

Position monitoring with two programmable positions per sensor. The end position monitoring is mounted in the C-slot.

| Description | ID | Recommended product |
|---|---|---|
| Programmable magnetic switch | | |
| MMS-P 22-S-M8-PNP | **0301370** | • |
| MMSK-P 22-S-PNP | **0301371** | |
| Connection cables | | |
| KA BG08-L 4P-0500 | **0307767** | |
| KA BG08-L 4P-1000 | **0307768** | |
| KA BW08-L 4P-0500 | **0307765** | |
| KA BW08-L 4P-1000 | **0307766** | |
| Sensor Distributor | | |
| V2-M8-4P-2XM8-3P | **0301380** | |

ⓘ Please note the minimum permitted bending radii for the sensor cables, which are generally 35 mm.

ⓘ Per gripper one sensor (closer/NO) is required, optionally a cable extension.

## Inductive proximity switches

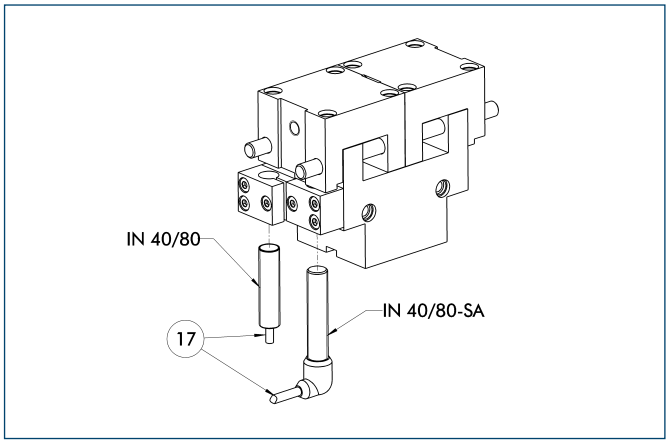


(17) Cable outlet

End position monitoring for direct mounting

| Description | ID | Recommended product |
|---|---|---|
| Inductive proximity switches | | |
| IN 80-S-M8 | **0301478** | • |
| IN 80-S-M12 | **0301578** | |
| INK 80-S | **0301550** | |
| Inductive proximity switch with lateral outlet | | |
| IN 80-S-M12-SA | **0301587** | |
| IN 80-S-M8-SA | **0301483** | • |
| INK 80-S-SA | **0301566** | |
| Connection cables | | |
| KA BG08-L 3P-0300-PNP | **0301622** | |
| KA BG08-L 3P-0500-PNP | **0301623** | |
| KA BG12-L 3P-0500-PNP | **30016369** | |
| KA BW08-L 3P-0300-PNP | **0301594** | |
| KA BW08-L 3P-0500-PNP | **0301502** | |
| KA BW12-L 3P-0300-PNP | **0301503** | |
| KA BW12-L 3P-0500-PNP | **0301507** | |
| Cable extensions | | |
| KV BG12-SG12 3P-0030-PNP | **0301999** | |
| KV BG12-SG12 3P-0060-PNP | **0301998** | |
| KV BW08-SG08 3P-0030-PNP | **0301495** | |
| KV BW08-SG08 3P-0100-PNP | **0301496** | |
| KV BW08-SG08 3P-0200-PNP | **0301497** | |
| KV BW12-SG12 3P-0030-PNP | **0301595** | |
| KV BW12-SG12 3P-0100-PNP | **0301596** | |
| KV BW12-SG12 3P-0200-PNP | **0301597** | |

ⓘ Two sensors (closer/NO) are required for each gripper, plus extension cables as an option.

ⓘ Please note the minimum permitted bending radii for the sensor cables, which are generally 35 mm.

You can find more detailed information and individual parts of the above-mentioned accessories in the “Accessories” catalog section.

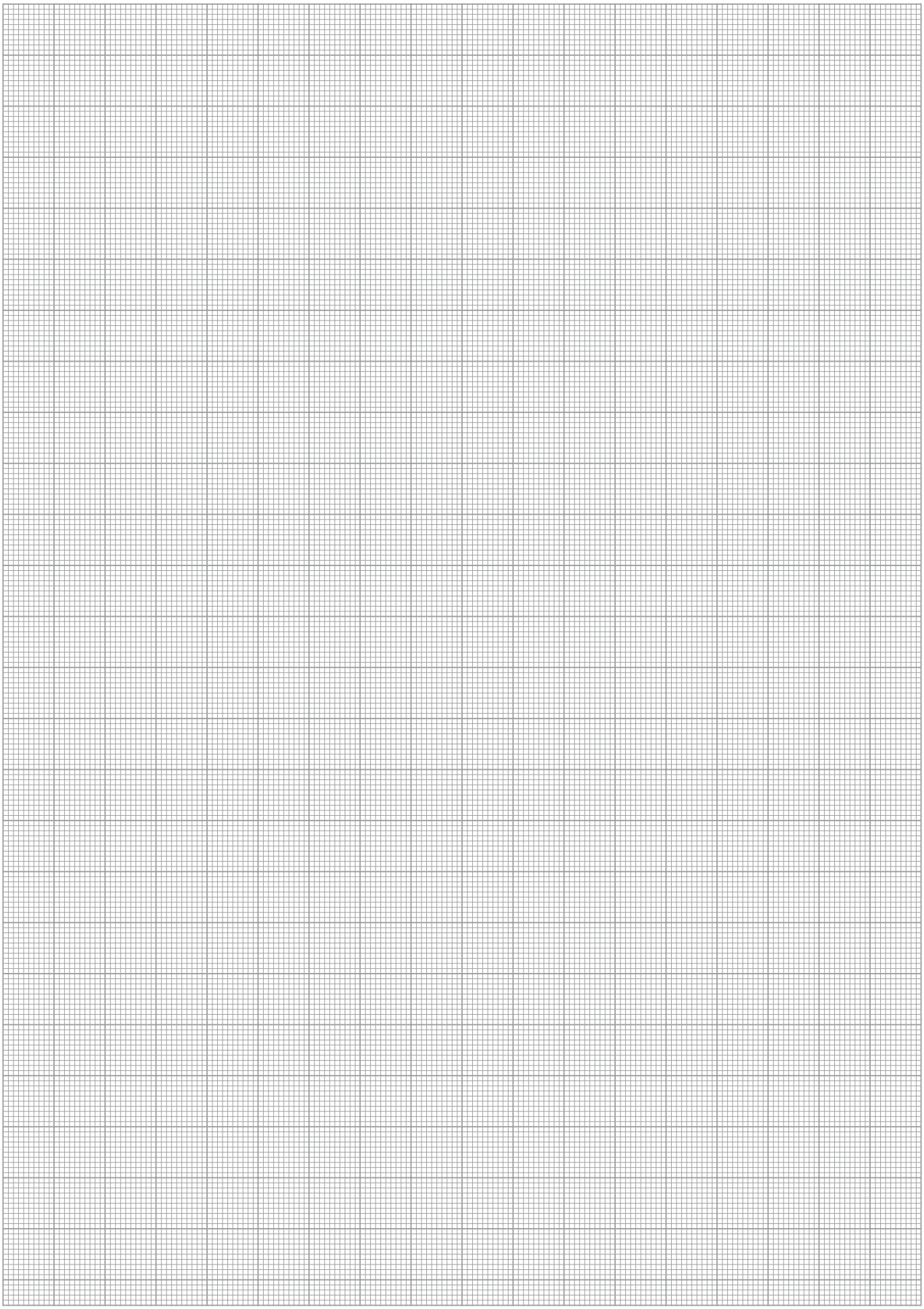

# PGM 120

**Pneumatic • 2-Finger Parallel Gripper • Universal Gripper**

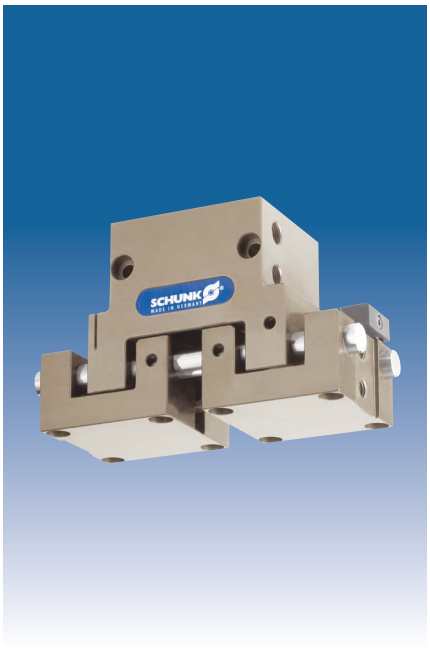

## Gripping force, I.D. gripping

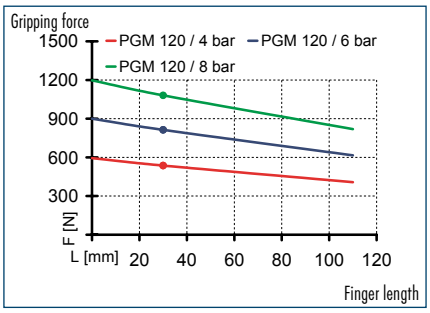


## Gripping force, O.D. gripping

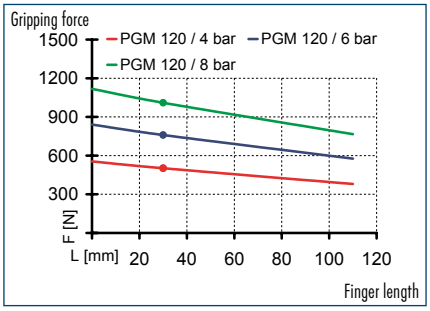


## Finger load

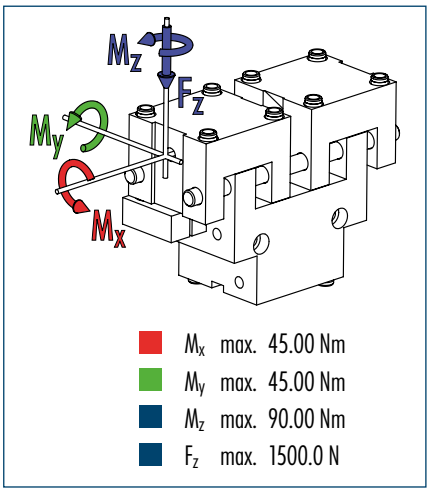


ⓘ The indicated moments and forces are static values, apply per base jaw and may occur simultaneously. $M_y$ may arise in addition to the moment generated by the gripping force itself. If the max. permitted finger weight is exceeded, it is imperative to throttle the air pressure so that the jaw movement occurs without any hitting or bouncing. Service life may be reduced.

## Technical data

| Description | | PGM 120 |
|---|---|---|
| **ID** | | **0302686** |
| Stroke per finger | [mm] | 12 |
| Closing force | [N] | 760 |
| Opening force | [N] | 810 |
| Weight | [kg] | 1.26 |
| Recommended workpiece weight | [kg] | 3.8 |
| Air consumption per double stroke | [cm³] | 23.6 |
| Min./max. operating pressure | [bar] | 2/8 |
| Nominal operating pressure | [bar] | 6 |
| Closing/opening time | [s] | 0.1/0.1 |
| Max. permitted finger length | [mm] | 110 |
| Max. permitted weight per finger | [kg] | 0.58 |
| IP class | | 30 |
| Min./max. ambient temperature | [°C] | -10/90 |
| Repeat accuracy | [mm] | 0.03 |

## Main view

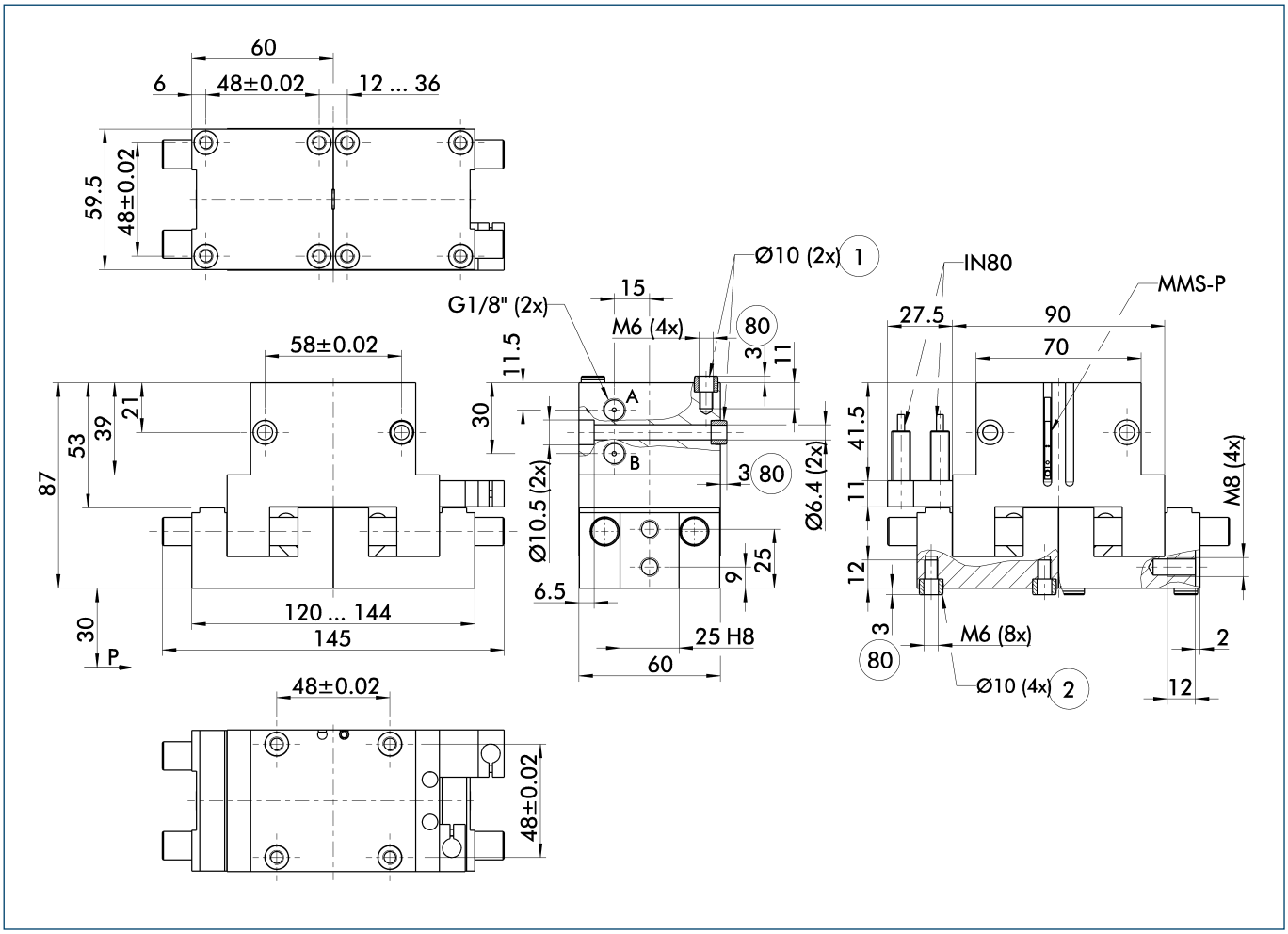


The drawing shows the gripper in the basic version with closed jaws, the dimensions do not include the options described below.

ⓘ The SDV-P pressure maintenance valve can be used as a gripping force maintenance device (see "Accessories" catalog section).

A, a Main/direct connection, gripper opening
B, b Main/direct connection, gripper closing
① Gripper connection
② Finger connection
(80) Depth of the centering sleeve hole in the matching part

## Maximum permitted finger projection

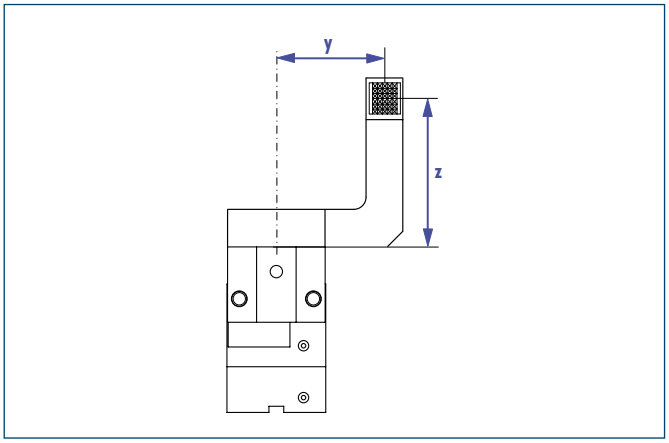


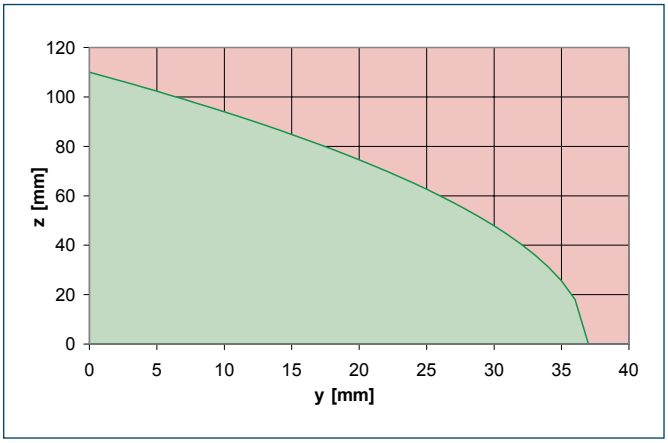


Permitted range
Inadmissible range

## Programmable magnetic switch

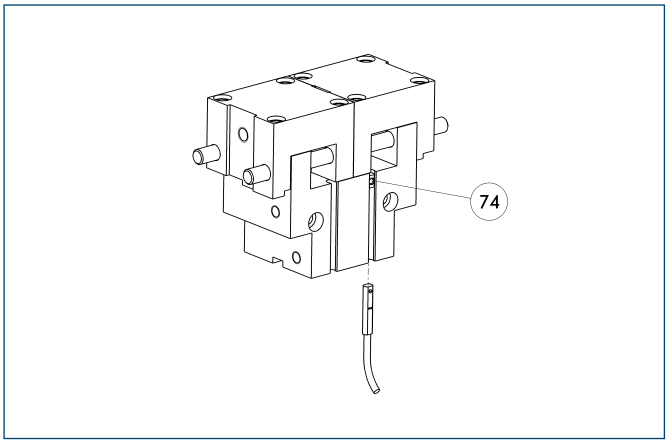


(74) Stop for MMS-P

Position monitoring with two programmable positions per sensor. The end position monitoring is mounted in the C-slot.

| Description | ID | Recommended product |
|---|---|---|
| Programmable magnetic switch | | |
| MMS-P 22-S-M8-PNP | **0301370** | • |
| MMSK-P 22-S-PNP | **0301371** | |
| Connection cables | | |
| KA BG08-L 4P-0500 | **0307767** | |
| KA BG08-L 4P-1000 | **0307768** | |
| KA BW08-L 4P-0500 | **0307765** | |
| KA BW08-L 4P-1000 | **0307766** | |
| Sensor Distributor | | |
| V2-M8-4P-2XM8-3P | **0301380** | |

ⓘ Please note the minimum permitted bending radii for the sensor cables, which are generally 35 mm.

ⓘ Per gripper one sensor (closer/NO) is required, optionally a cable extension.

## Inductive proximity switches

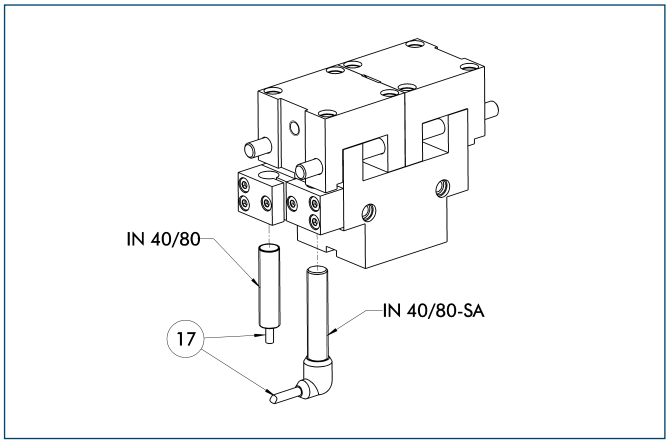


(17) Cable outlet

End position monitoring for direct mounting

| Description | ID | Recommended product |
|---|---|---|
| Inductive proximity switches | | |
| IN 80-S-M8 | **0301478** | • |
| IN 80-S-M12 | **0301578** | |
| INK 80-S | **0301550** | |
| Inductive proximity switch with lateral outlet | | |
| IN 80-S-M12-SA | **0301587** | |
| IN 80-S-M8-SA | **0301483** | • |
| INK 80-S-SA | **0301566** | |
| Connection cables | | |
| KA BG08-L 3P-0300-PNP | **0301622** | |
| KA BG08-L 3P-0500-PNP | **0301623** | |
| KA BG12-L 3P-0500-PNP | **30016369** | |
| KA BW08-L 3P-0300-PNP | **0301594** | |
| KA BW08-L 3P-0500-PNP | **0301502** | |
| KA BW12-L 3P-0300-PNP | **0301503** | |
| KA BW12-L 3P-0500-PNP | **0301507** | |
| Cable extensions | | |
| KV BG12-SG12 3P-0030-PNP | **0301999** | |
| KV BG12-SG12 3P-0060-PNP | **0301998** | |
| KV BW08-SG08 3P-0030-PNP | **0301495** | |
| KV BW08-SG08 3P-0100-PNP | **0301496** | |
| KV BW08-SG08 3P-0200-PNP | **0301497** | |
| KV BW12-SG12 3P-0030-PNP | **0301595** | |
| KV BW12-SG12 3P-0100-PNP | **0301596** | |
| KV BW12-SG12 3P-0200-PNP | **0301597** | |

ⓘ Two sensors (closer/NO) are required for each gripper, plus extension cables as an option.

ⓘ Please note the minimum permitted bending radii for the sensor cables, which are generally 35 mm.

You can find more detailed information and individual parts of the above-mentioned accessories in the “Accessories” catalog section.

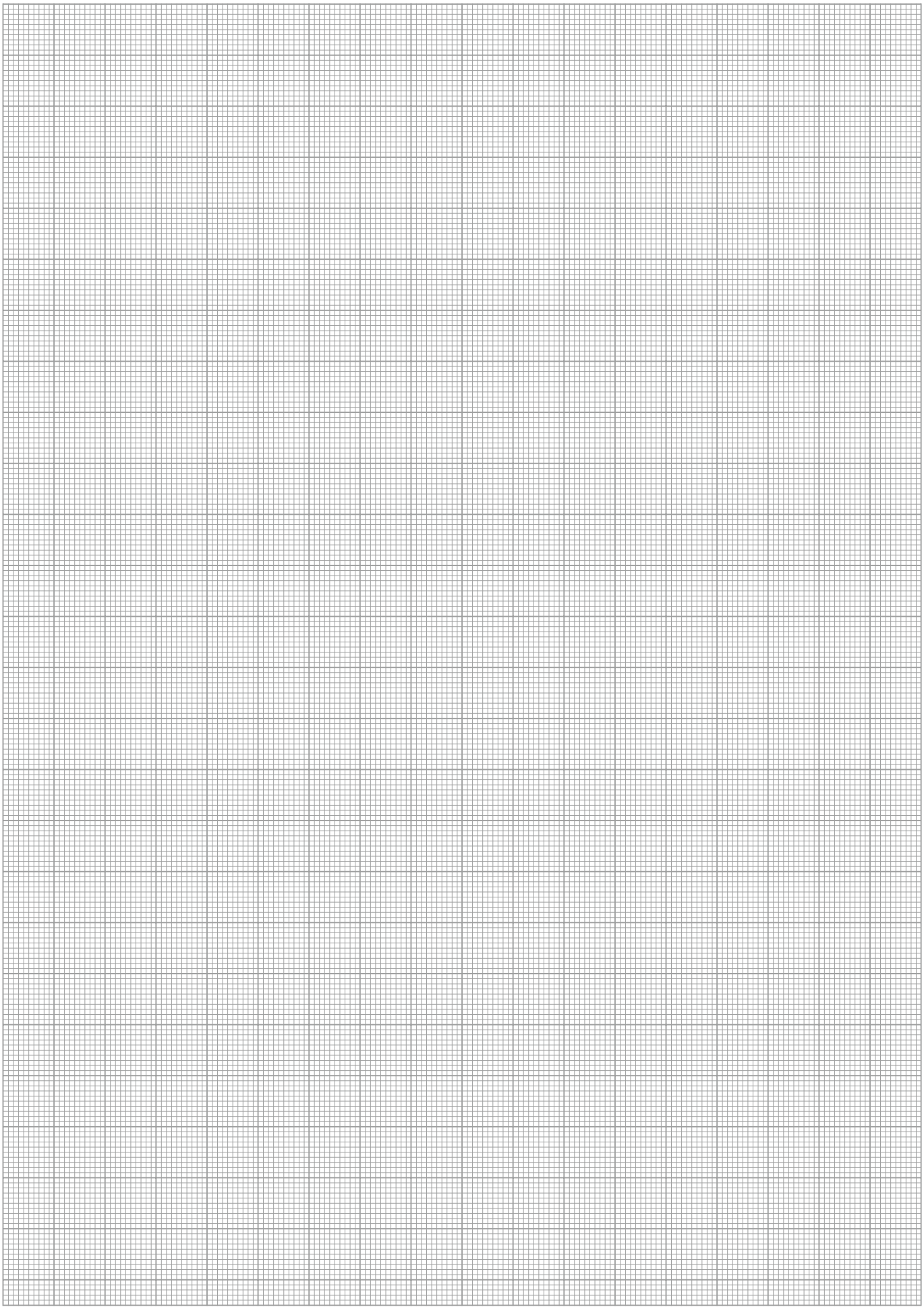

# PGM 140

**Pneumatic • 2-Finger Parallel Gripper • Universal Gripper**

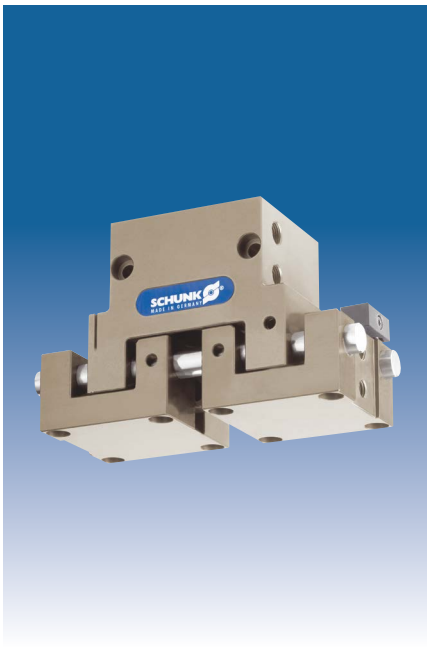

## Gripping force, I.D. gripping

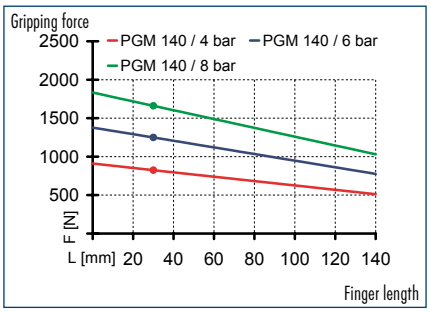


## Gripping force, O.D. gripping

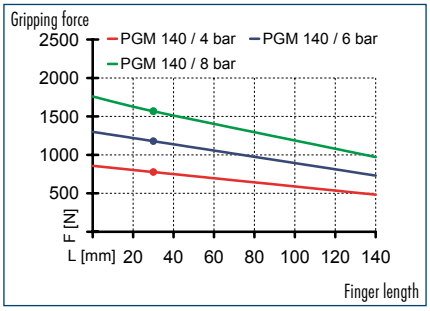


## Finger load

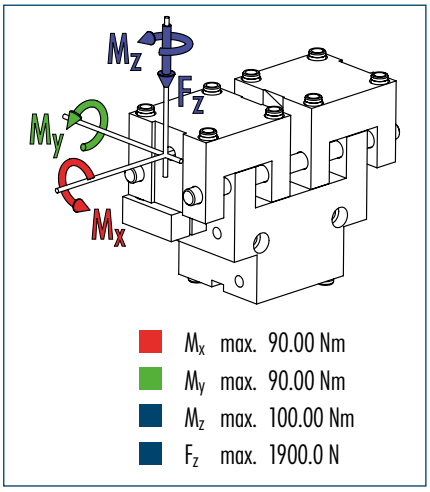


ⓘ The indicated moments and forces are static values, apply per base jaw and may occur simultaneously. $M_y$ may arise in addition to the moment generated by the gripping force itself. If the max. permitted finger weight is exceeded, it is imperative to throttle the air pressure so that the jaw movement occurs without any hitting or bouncing. Service life may be reduced.

## Technical data

| Description | | PGM 140 |
|---|---|---|
| **ID** | | **0302687** |
| Stroke per finger | [mm] | 15 |
| Closing force | [N] | 1180 |
| Opening force | [N] | 1250 |
| Weight | [kg] | 2.55 |
| Recommended workpiece weight | [kg] | 5.9 |
| Air consumption per double stroke | [cm³] | 46.8 |
| Min./max. operating pressure | [bar] | 2/8 |
| Nominal operating pressure | [bar] | 6 |
| Closing/opening time | [s] | 0.12/0.12 |
| Max. permitted finger length | [mm] | 140 |
| Max. permitted weight per finger | [kg] | 1 |
| IP class | | 30 |
| Min./max. ambient temperature | [°C] | -10/90 |
| Repeat accuracy | [mm] | 0.03 |

## Main view

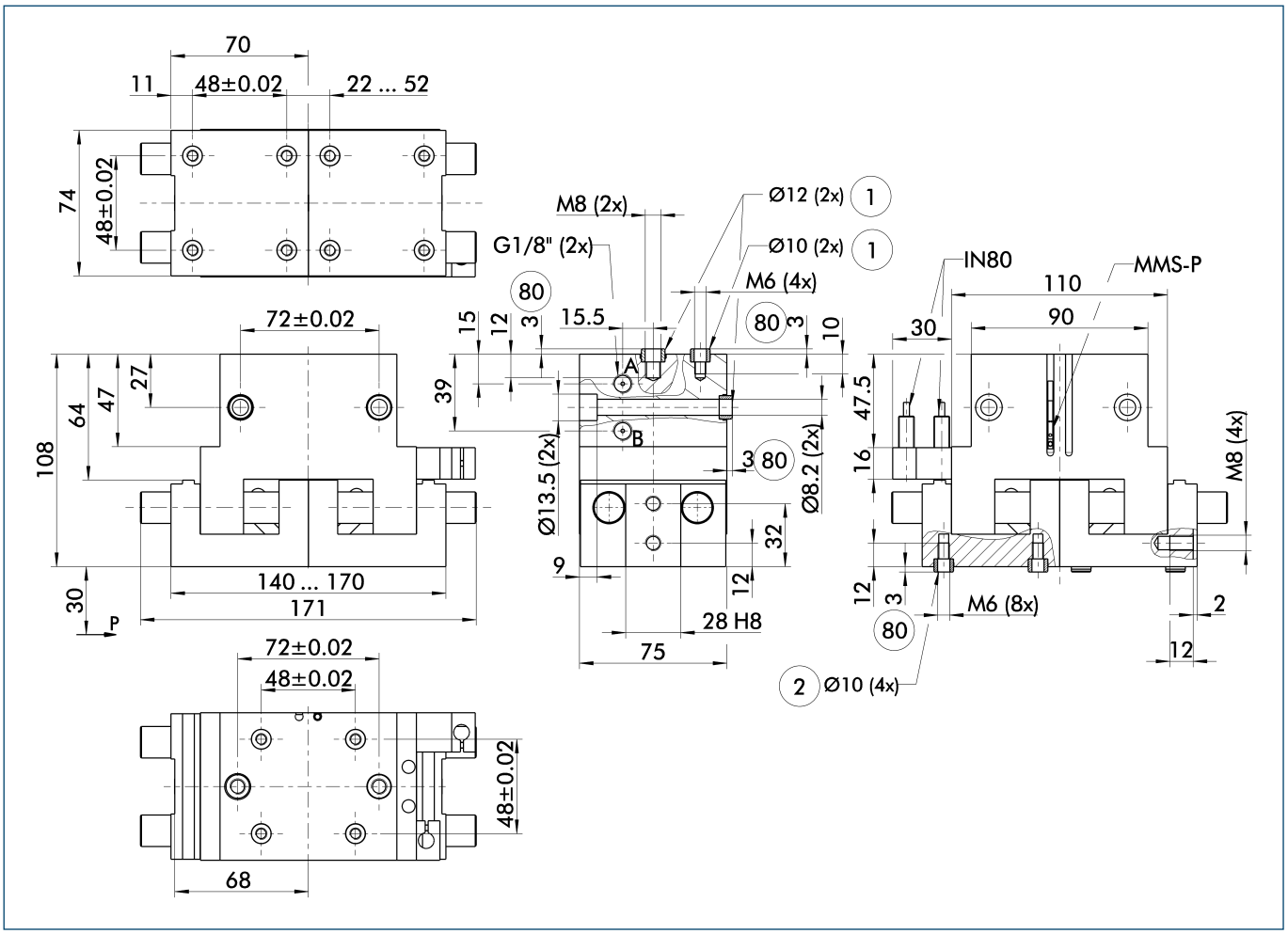


The drawing shows the gripper in the basic version with closed jaws, the dimensions do not include the options described below.

ⓘ The SDV-P pressure maintenance valve can be used as a gripping force maintenance device (see "Accessories" catalog section).

A, a Main/direct connection, gripper opening
B, b Main/direct connection, gripper closing
① Gripper connection
② Finger connection
(80) Depth of the centering sleeve hole in the matching part

## Maximum permitted finger projection

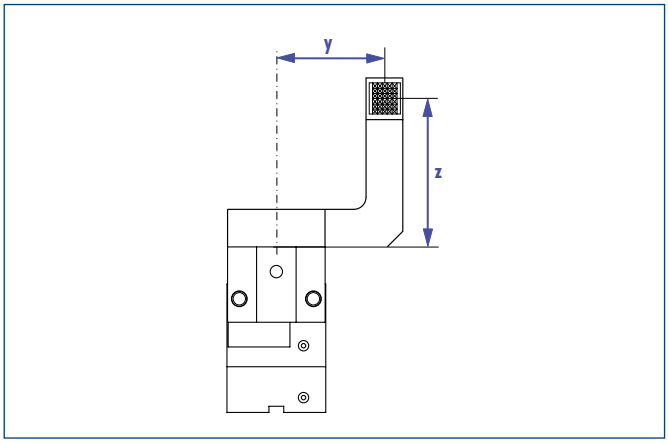


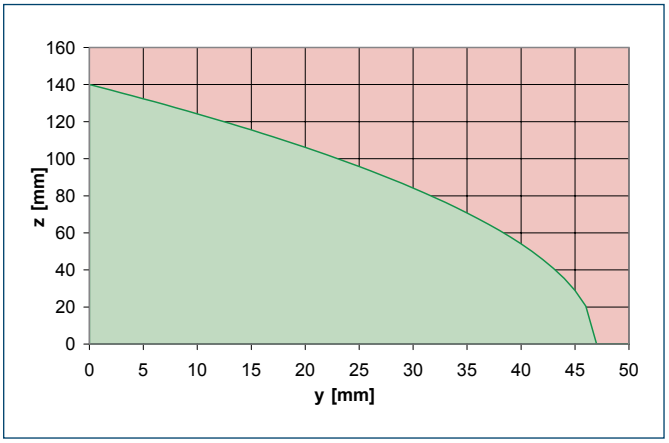


Permitted range
Inadmissible range

## Programmable magnetic switch

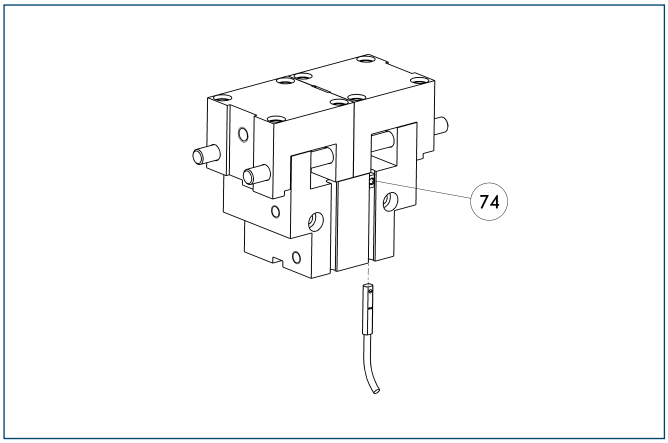


(74) Stop for MMS-P

Position monitoring with two programmable positions per sensor. The end position monitoring is mounted in the C-slot.

| Description | ID | Recommended product |
|---|---|---|
| Programmable magnetic switch | | |
| MMS-P 22-S-M8-PNP | **0301370** | • |
| MMSK-P 22-S-PNP | **0301371** | |
| Connection cables | | |
| KA BG08-L 4P-0500 | **0307767** | |
| KA BG08-L 4P-1000 | **0307768** | |
| KA BW08-L 4P-0500 | **0307765** | |
| KA BW08-L 4P-1000 | **0307766** | |
| Sensor Distributor | | |
| V2-M8-4P-2XM8-3P | **0301380** | |

ⓘ Please note the minimum permitted bending radii for the sensor cables, which are generally 35 mm.

ⓘ Per gripper one sensor (closer/NO) is required, optionally a cable extension.

## Inductive proximity switches

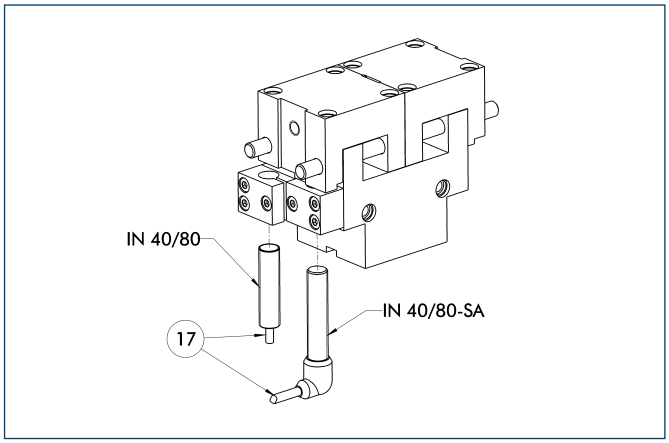


(17) Cable outlet

End position monitoring for direct mounting

| Description | ID | Recommended product |
|---|---|---|
| Inductive proximity switches | | |
| IN 80-S-M8 | **0301478** | • |
| IN 80-S-M12 | **0301578** | |
| INK 80-S | **0301550** | |
| Inductive proximity switch with lateral outlet | | |
| IN 80-S-M12-SA | **0301587** | |
| IN 80-S-M8-SA | **0301483** | • |
| INK 80-S-SA | **0301566** | |
| Connection cables | | |
| KA BG08-L 3P-0300-PNP | **0301622** | |
| KA BG08-L 3P-0500-PNP | **0301623** | |
| KA BG12-L 3P-0500-PNP | **30016369** | |
| KA BW08-L 3P-0300-PNP | **0301594** | |
| KA BW08-L 3P-0500-PNP | **0301502** | |
| KA BW12-L 3P-0300-PNP | **0301503** | |
| KA BW12-L 3P-0500-PNP | **0301507** | |
| Cable extensions | | |
| KV BG12-SG12 3P-0030-PNP | **0301999** | |
| KV BG12-SG12 3P-0060-PNP | **0301998** | |
| KV BW08-SG08 3P-0030-PNP | **0301495** | |
| KV BW08-SG08 3P-0100-PNP | **0301496** | |
| KV BW08-SG08 3P-0200-PNP | **0301497** | |
| KV BW12-SG12 3P-0030-PNP | **0301595** | |
| KV BW12-SG12 3P-0100-PNP | **0301596** | |
| KV BW12-SG12 3P-0200-PNP | **0301597** | |

ⓘ Two sensors (closer/NO) are required for each gripper, plus extension cables as an option.

ⓘ Please note the minimum permitted bending radii for the sensor cables, which are generally 35 mm.

You can find more detailed information and individual parts of the above-mentioned accessories in the “Accessories” catalog section.

# PGB



**Sizes**
64 ... 125

**Weight**
0.28 kg ... 1.32 kg

**Gripping force**
90 N ... 610 N

**Stroke per finger**
4 mm ... 10 mm

**Workpiece weight**
0.7 kg ... 3.3 kg

## Application example

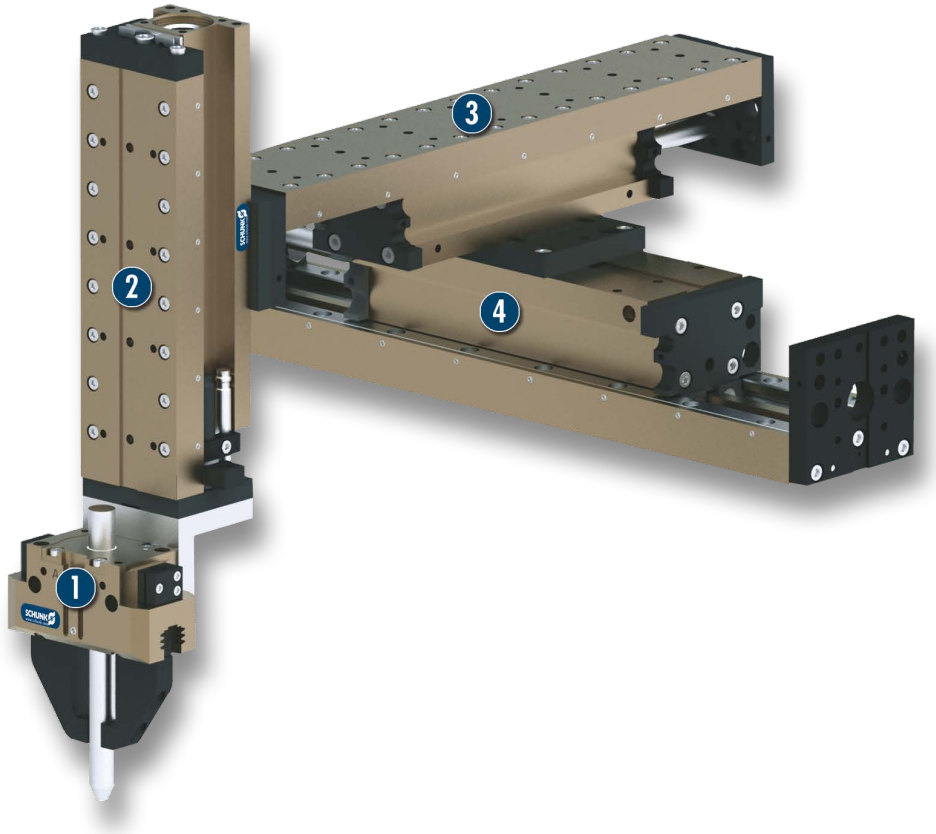


**Assembly unit for long axes. Feeding is done space-saving via the center bore of the gripper.**

1. 2-Finger Parallel Gripper PGB
2. Linear module CLM
3. Linear module LM
4. Linear module LM

## Universal Gripper
universal 2-Finger Parallel Gripper with high gripping force and high moment capacity due to the multi-tooth slideway as well as the center bore

## Field of application
For universal use in clean and slightly dirty environments. Suitable for applications that require a center bore, e.g. for workpiece feed, special sensor systems or optical recognition systems

## Your advantages and benefits

**Robust multi-tooth guidance**
for precise handling

**Center through-hole**
for workpiece feeding, supply hoses, sensors, optical workpiece recognition systems and others

**High maximum moments possible**
suitable for using long gripper fingers

**Drive concept oval piston**
for maximum gripping forces

**Mounting from three sides in three screw directions possible**
for universal and flexible gripper assembly

**Air supply via hose-free direct connection or screw connections**
for the flexible supply of compressed air in all automation systems

**Comprehensive sensor accessory program**
for versatile interrogation possibilities and control of stroke position







## General note to the series

**Principle of function**
Wedge-hook kinematics

**Housing material**
Aluminum alloy, hard-anodized

**Base jaw material**
Steel

**Actuation**
pneumatic, with filtered compressed air (10 microns): dry, lubricated or non-lubricated
Pressure medium: Required quality class of compressed air according to DIN ISO 8573-1: 6 4 4

**Warranty**
24 months (details, general terms and conditions and operation manuals can be downloaded under www.schunk.com)

**Scope of delivery**
Centering sleeves, O-rings for direct connection, assembly and operating manual with manufacturer's declaration

**Gripping force maintenance device**
possible with SDV-P pressure maintenance valve

## Sectional diagram

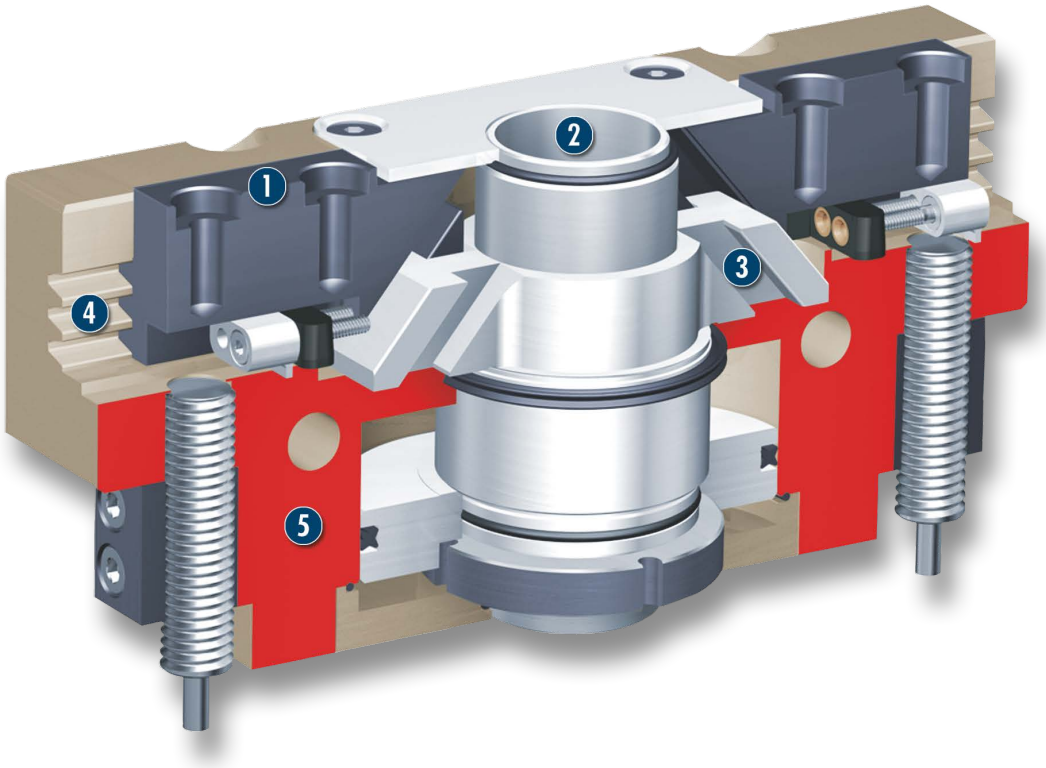


**1 Base jaw**
for the connection of workpiece-specific gripper fingers

**2 Center bore**
for workpiece feeding, for sensor systems, actuators (ejectors) or optical workpiece recognition

**3 Wedge-hook design**
for high power transmission and centric gripping

**4 Multiple-tooth guidance**
high-loadable base jaw guidance with minimum play for long fingers

**5 Housing**
weight-optimized through application of hard-anodized, high-strength aluminum alloy

## Functional description

The oval piston is moved up or down by means of compressed air.
Through its angled active surfaces, the wedge hook transforms this movement into the lateral, synchronous gripping movement of both base jaws.

## Options and special information

With its center bore, the PGB series is the ideal standard solution for many areas of application.

## Accessories

Accessories from SCHUNK – the suitable supplement for maximum functionality, reliability and performance of all automation modules.

### Centering sleeves



### Fittings



### Magnetic Switches



### Inductive proximity switches



### Universal intermediate jaw



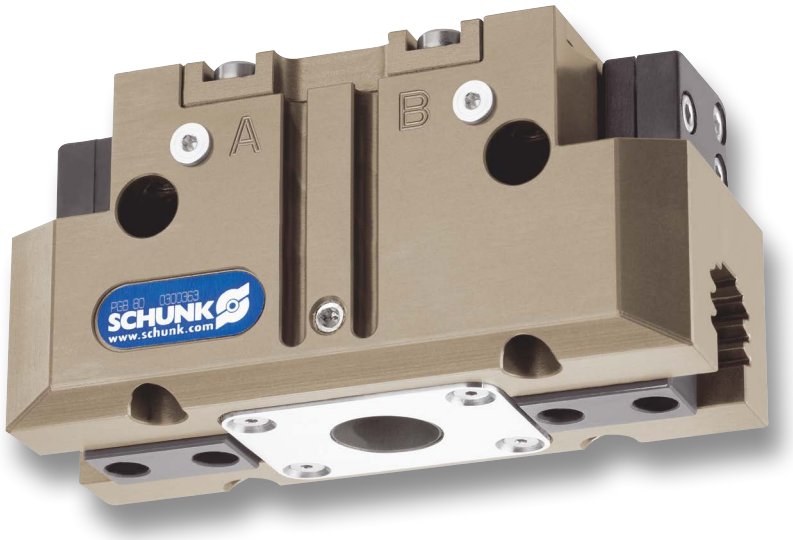


### Sensor cables



### Gripper pads

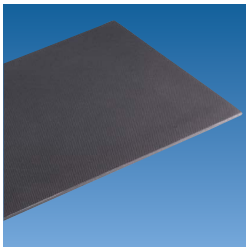

### Sensor Distributor

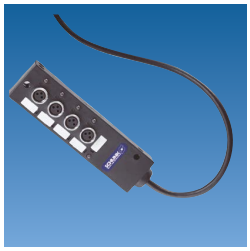

### Pressure maintenance valve



### Finger blanks



### Force measuring jaws




### Analog position sensor

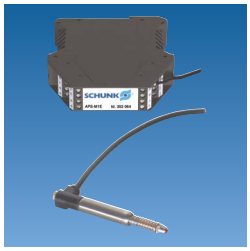

### Flexible Position Sensor

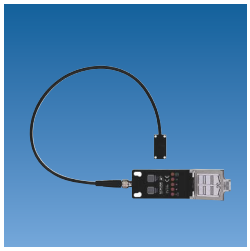

ⓘ For the exact size of the required accessories, availability of this size and the designation and ID, please refer to the additional views at the end of the size in question. You will find more detailed information on our accessory range in the “Accessories” catalog section.

## General note to the series

### Gripping force

is the arithmetic total of the gripping force applied to each finger at distance P (see illustration) measured from the upper edge of the gripper.

### Finger length

The finger length is measured from the upper edge of the gripper housing in the direction of the main axis.

### Repeat accuracy

is defined as the spread of the limit position after 100 consecutive strokes.

### Workpiece weight

The recommended workpiece weight is calculated for a force-type connection with a coefficient of friction of 0.1 and a safety factor of 2 against slippage of the workpiece on acceleration due to gravity g. Considerably heavier workpiece weights are permitted with form-fit gripping.

### Closing and opening times

Closing and opening times are purely the times that the base jaws or fingers are in motion. Valve switching times, hose filling times or PLC reaction times are not included in the above times and must be taken into consideration when determining cycle times.

# PGB 64

**Pneumatic • 2-Finger Parallel Gripper • Universal Gripper**



## Gripping force, I.D. gripping

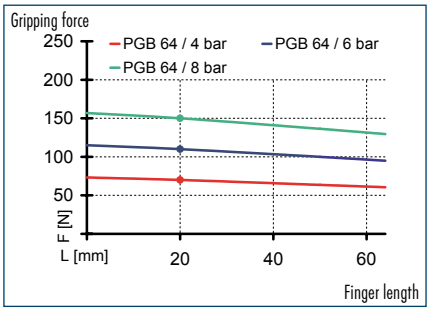


## Gripping force, O.D. gripping

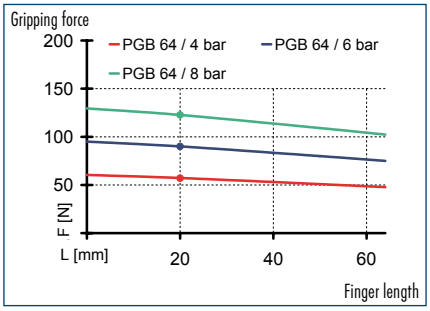


## Finger load

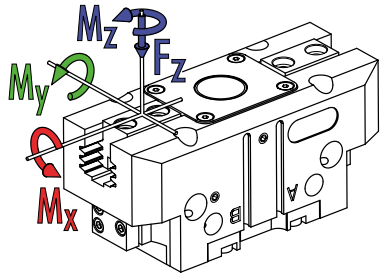


- $M_x$ max. 20.00 Nm
- $M_y$ max. 25.00 Nm
- $M_z$ max. 10.00 Nm
- $F_z$ max. 500.0 N

ⓘ The indicated moments and forces are static values, apply per base jaw and may occur simultaneously. $M_y$ may arise in addition to the moment generated by the gripping force itself. If the max. permitted finger weight is exceeded, it is imperative to throttle the air pressure so that the jaw movement occurs without any hitting or bouncing. Service life may be reduced.

## Technical data

| Description | | PGB 64 |
|---|---|---|
| **ID** | | **0300360** |
| Stroke per finger | [mm] | 4 |
| Closing force | [N] | 90 |
| Opening force | [N] | 110 |
| Weight | [kg] | 0.28 |
| Recommended workpiece weight | [kg] | 0.7 |
| Air consumption per double stroke | [cm³] | 5 |
| Min./max. operating pressure | [bar] | 2.5/8 |
| Nominal operating pressure | [bar] | 6 |
| Closing/opening time | [s] | 0.02/0.02 |
| Max. permitted finger length | [mm] | 64 |
| Max. permitted weight per finger | [kg] | 0.18 |
| IP class | | 40 |
| Min./max. ambient temperature | [°C] | -10/90 |
| Repeat accuracy | [mm] | 0.01 |
| Diameter of center bore | [mm] | 10 |

## Main view

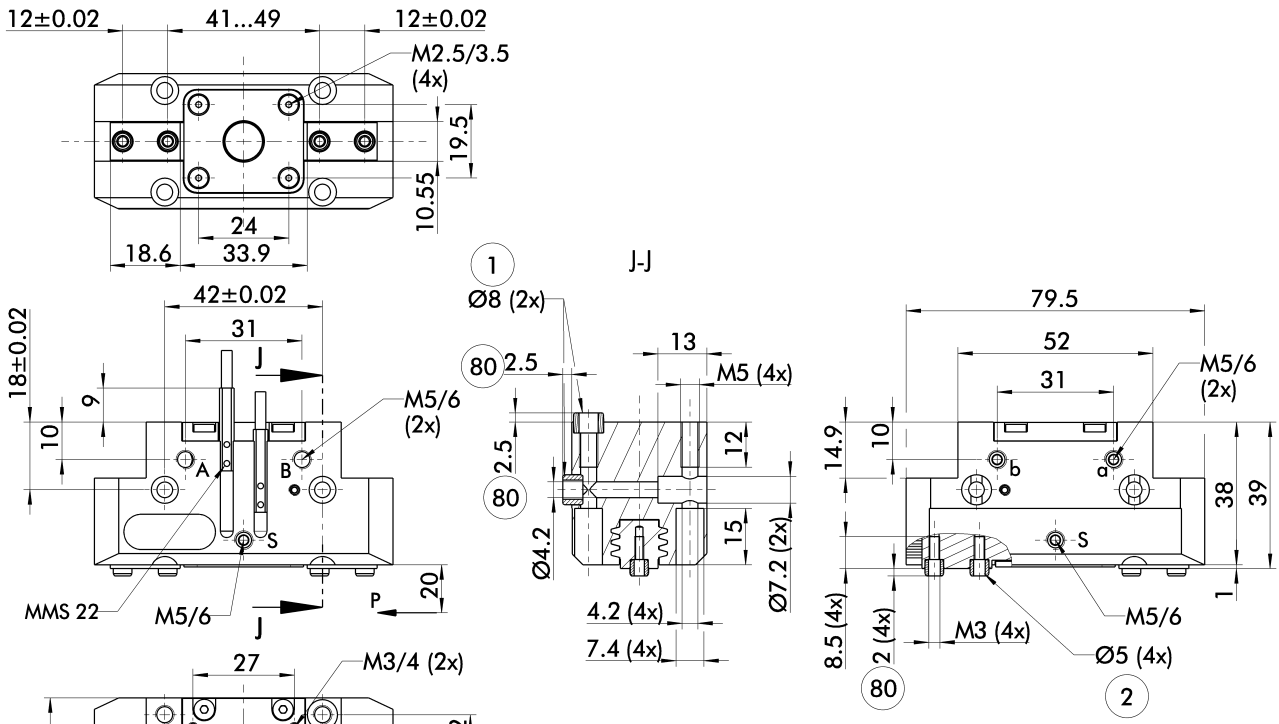


The drawing shows the gripper in the basic version with closed jaws, the dimensions do not include the options described below.

ⓘ The SDV-P pressure maintenance valve can be used as a gripping force maintenance device (see "Accessories" catalog section).

A, a Main/direct connection, gripper opening
B, b Main/direct connection, gripper closing
S Air purge connection
① Gripper connection
② Finger connection
㉘ Through-bore
㉚ Depth of the centering sleeve hole in the matching part

## Hose-free direct connection

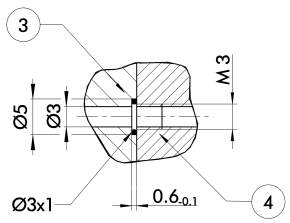


③ Adapter
④ Gripper

The direct connection is used for supplying compressed air without hoses. Instead, the pressure medium is fed through bore-holes in the mounting plate.

## Maximum permitted finger projection

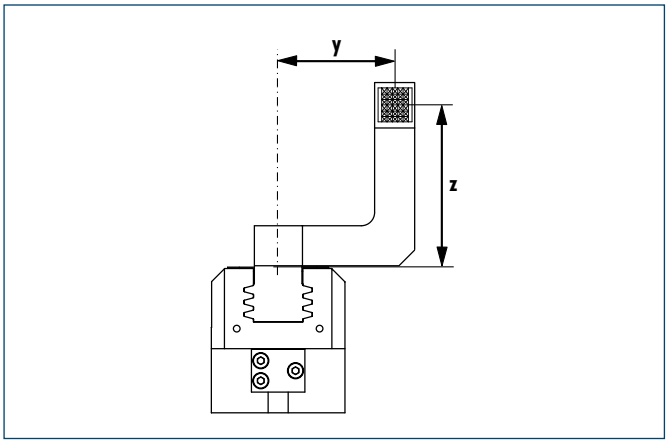


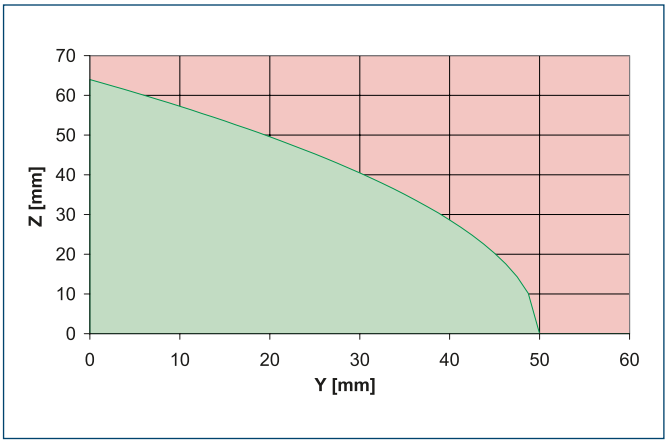


Permitted range
Inadmissible range

The curve applies to the basic version (stroke -1). For other versions, the curve will be parallel but offset in line with the max. permitted finger length.

## Quick-change Jaw System

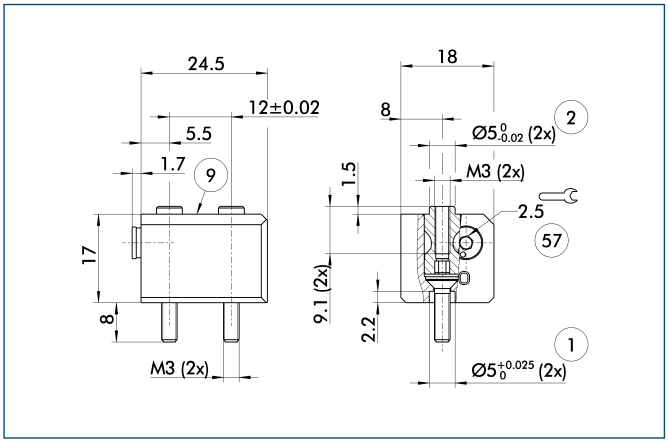


① Gripper connection
② Finger connection
⑨ For mounting screw connection diagram, see basic version
57 Locking

The BSWS quick-change jaw system enables top jaws to be changed on the gripper manually and rapidly. An adapter (BSWS-A) and a base (BSWS-B) are required for each gripper jaw.
For a reverse assembly without height set-up, one adapter (BSWS-A) and a kit (BSWS-U) per gripper jaw are required. Another effect of the BSWS-U is, that there are no disturbing fastening bores in the finger contour.

| Description | ID |
|---|---|
| Quick-change Jaw System adapter | |
| BSWS-A 50 | 0303020 |
| Quick-change Jaw System base | |
| BSWS-B 50 | 0303021 |
| Quick-change Jaw System reversed | |
| BSWS-U 50 | 0303040 |

## Universal intermediate jaw

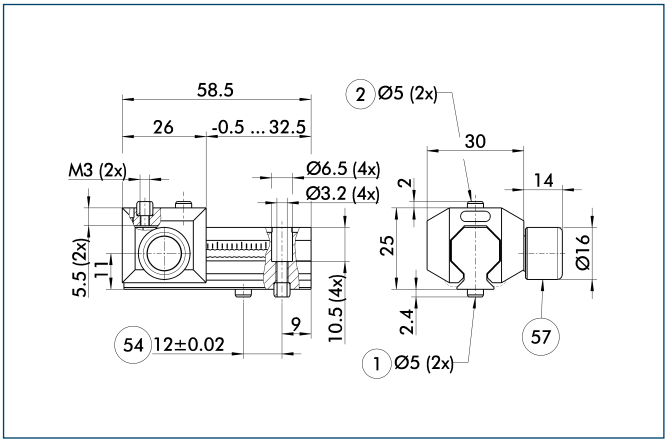


① Gripper connection
② Finger connection
54 Optional right or left connection
57 Locking

The universal intermediate jaw allows fast tool-free and reliable plugging and shifting of top jaws at the gripper.

| Description | ID | Grid dimension |
|---|---|---|
| Universal intermediate jaw | | |
| UZB 50 | 0300041 | 1.5 mm |

ⓘ The slide UZB-S can be removed completely and has to be ordered separately. Moreover, it allows a fast jaw change.

You can find more detailed information and individual parts of the above-mentioned accessories in the “Accessories” catalog section.

## Force measuring jaws

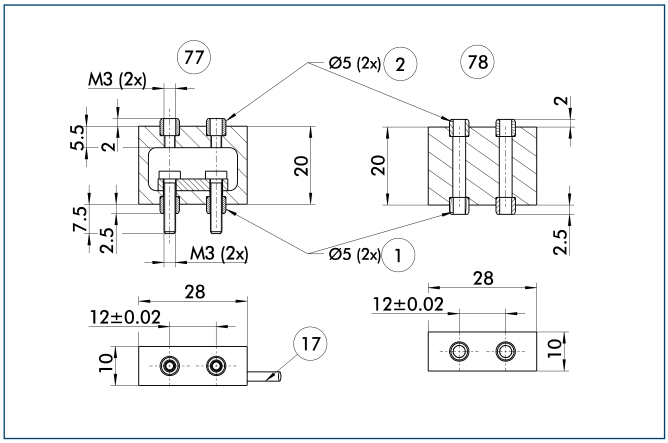


① Gripper connection
② Finger connection
⑰ Cable outlet
⑦⑦ Active intermediate jaws
⑦⑧ Passive intermediate jaws

Force measuring jaws measure gripping forces, but can also determine workpiece weights or dimensional deviations. There are active and passive intermediate jaws (FMS-ZBA or FMS-ZBP). At least one active force measuring jaw is required per gripper, the rest can be passive. For each active jaw, a FMS-A1 control unit and a FMS-A connection cable are required.

| Description | ID |
|---|---|
| Active intermediate jaws | |
| FMS-ZBA 50 | **0301830** |
| Passive intermediate jaws | |
| FMS-ZBP 50 | **0301831** |
| Electronic Processor | |
| FMS-A1 | **0301810** |
| Connection cables | |
| FMS-AK0200 | **0301820** |
| FMS-AK0500 | **0301821** |
| FMS-AK1000 | **0301822** |
| FMS-AK2000 | **0301823** |

## Finger blanks

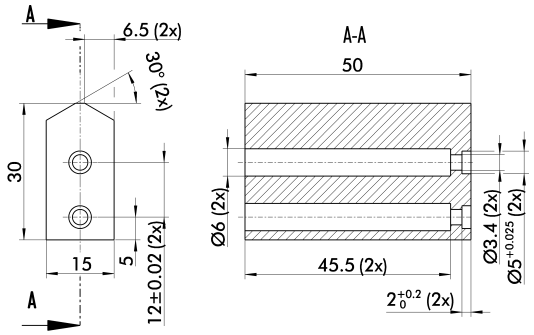


Finger blanks for customized subsequent machining

| Description | ID | Material | Scope of delivery |
|---|---|---|---|
| Finger blanks | | | |
| ABR-plus 50 | **0300009** | Aluminum | 1 |
| SBR-plus 50 | **0300019** | 16 MnCr 5 | 1 |

You can find more detailed information and individual parts of the above-mentioned accessories in the “Accessories” catalog section.

## Tolerance compensation unit

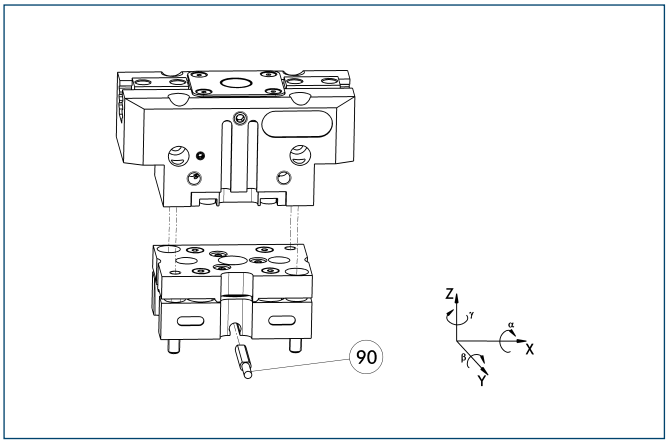


(90) Monitoring of locking

Grippers can be directly mounted without an adapter plate. Tolerance compensation unit and gripper have an identical screw connection diagram. Therefore the tolerance compensation units can be assembled later. Please consider the additional assembly height of the tolerance compensation unit. For details see catalog “Robot Accessories”.

| Description | ID | Locking | Deflection |
|---|---|---|---|
| Compensation unit | | | |
| TCU-064-3-MV-P | **0324774** | Yes | ±3°/±1°/±2° |
| TCU-064-3-OV-P | **0324775** | No | ±3°/±1°/±2° |

## Programmable magnetic switch

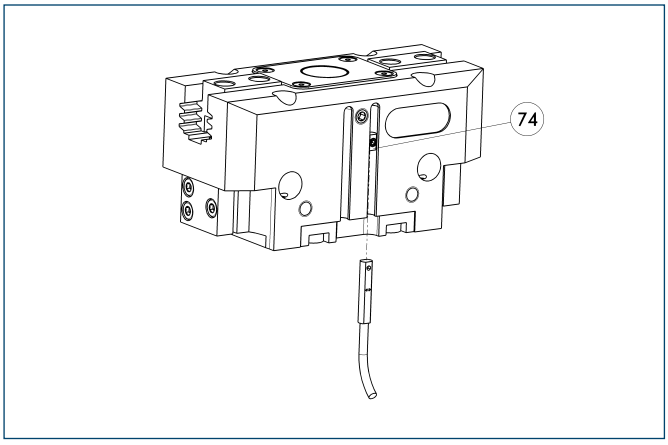


(74) Stop for MMS-P

Position monitoring with two programmable positions per sensor. The end position monitoring is mounted in the C-slot.

| Description | ID | Recommended product |
|---|---|---|
| Programmable magnetic switch | | |
| MMS-P 22-S-M8-PNP | **0301370** | • |
| MMSK-P 22-S-PNP | **0301371** | |
| Connection cables | | |
| KA BG08-L 4P-0500 | **0307767** | |
| KA BG08-L 4P-1000 | **0307768** | |
| KA BW08-L 4P-0500 | **0307765** | |
| KA BW08-L 4P-1000 | **0307766** | |
| Sensor Distributor | | |
| V2-M8-4P-2XM8-3P | **0301380** | |

ⓘ Please note the minimum permitted bending radii for the sensor cables, which are generally 35 mm.

ⓘ Per gripper one sensor (closer/NO) is required, optionally a cable extension.

## Compensation unit with spring reset

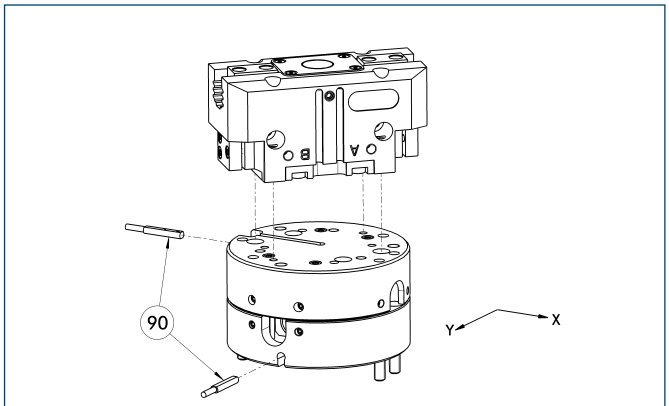


(90) Monitoring

Grippers can be directly mounted without using an adapter plate. For details see our catalog “Robot Accessories”.

| Description | ID | Compensation travel | Reset force |
|---|---|---|---|
| Compensation unit | | | |
| AGE-F-XY-063-1 | **0324940** | ±4 mm | 9 N |
| AGE-F-XY-063-2 | **0324941** | ±4 mm | 10 N |
| AGE-F-XY-063-3 | **0324942** | ±4 mm | 19.3 N |

## Electronic magnetic switches

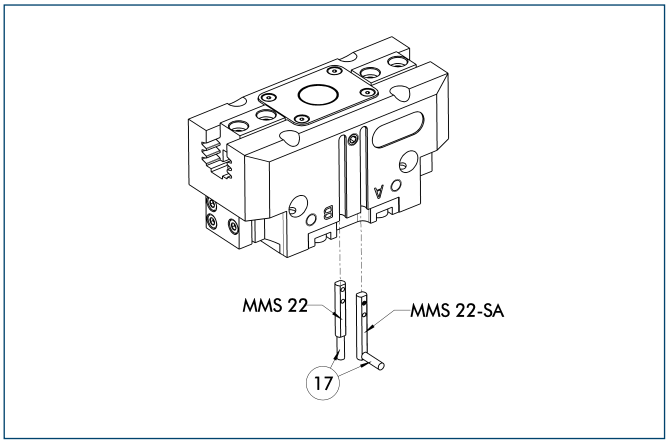


⑰ Cable outlet

End position monitoring for mounting in the C-slot

| Description | ID | Recommended product |
|---|---|---|
| Electronic magnetic switches | | |
| MMS 22-S-M5-PNP | **0301438** | |
| MMS 22-S-M5-NPN | **0301439** | |
| MMS 22-S-M8-PNP | **0301432** | • |
| MMS 22-S-M8-NPN | **0301433** | |
| MMSK 22-S-PNP | **0301434** | |
| MMSK 22-S-NPN | **0301435** | |
| Electronic magnetic switches with lateral cable outlet | | |
| MMS 22-S-M5-PNP-SA | **0301448** | |
| MMS 22-S-M5-NPN-SA | **0301449** | |
| MMS 22-S-M8-PNP-SA | **0301442** | • |
| MMS 22-S-M8-NPN-SA | **0301443** | |
| MMSK 22-S-PNP-SA | **0301444** | |
| MMSK 22-S-NPN-SA | **0301445** | |
| Reed Switches | | |
| RMS 22-S-M8 | **0377720** | • |
| Connection cables | | |
| KA BG05-L 3P-0300 | **0301652** | |
| KA BG08-L 3P-0300-PNP | **0301622** | |
| KA BG08-L 3P-0500-PNP | **0301623** | |
| KA BW05-L 3P-0300 | **0301650** | |
| KA BW08-L 3P-0300-NPN | **0301602** | |
| KA BW08-L 3P-0300-PNP | **0301594** | |
| KA BW08-L 3P-0500-NPN | **9641116** | |
| KA BW08-L 3P-0500-PNP | **0301502** | |
| Cable extensions | | |
| KV BW08-SG08 3P-0030-PNP | **0301495** | |
| KV BW08-SG08 3P-0100-PNP | **0301496** | |
| KV BW08-SG08 3P-0200-PNP | **0301497** | |

ⓘ Two sensors (closer/NO) are required for each gripper, plus extension cables as an option.

ⓘ Please note the minimum permitted bending radii for the sensor cables, which are generally 35 mm.

You can find more detailed information and individual parts of the above-mentioned accessories in the “Accessories” catalog section.

# PGB 80

**Pneumatic • 2-Finger Parallel Gripper • Universal Gripper**

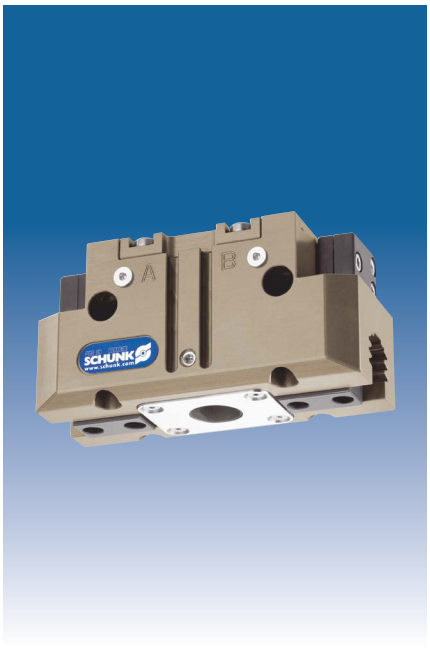

## Gripping force, I.D. gripping

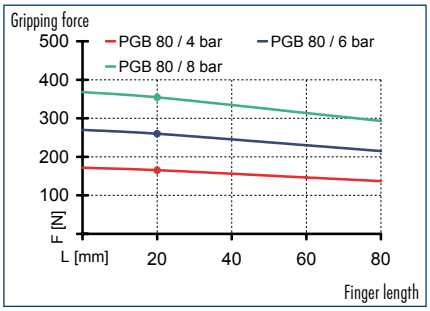


## Gripping force, O.D. gripping

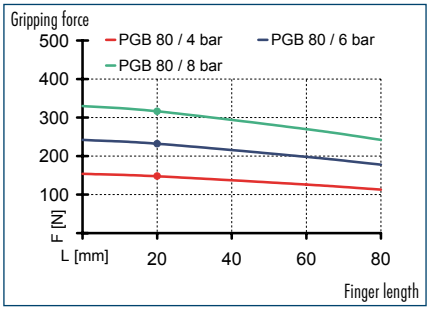


## Finger load

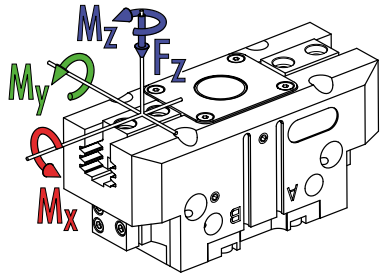


- $M_x$ max. 40.00 Nm
- $M_y$ max. 60.00 Nm
- $M_z$ max. 40.00 Nm
- $F_z$ max. 1100.0 N

ⓘ The indicated moments and forces are static values, apply per base jaw and may occur simultaneously. $M_y$ may arise in addition to the moment generated by the gripping force itself. If the max. permitted finger weight is exceeded, it is imperative to throttle the air pressure so that the jaw movement occurs without any hitting or bouncing. Service life may be reduced.

## Technical data

| Description | | PGB 80 |
|---|---|---|
| **ID** | | **0300363** |
| Stroke per finger | [mm] | 6 |
| Closing force | [N] | 240 |
| Opening force | [N] | 260 |
| Weight | [kg] | 0.47 |
| Recommended workpiece weight | [kg] | 1.25 |
| Air consumption per double stroke | [cm³] | 11 |
| Min./max. operating pressure | [bar] | 2.5/8 |
| Nominal operating pressure | [bar] | 6 |
| Closing/opening time | [s] | 0.03/0.03 |
| Max. permitted finger length | [mm] | 80 |
| Max. permitted weight per finger | [kg] | 0.35 |
| IP class | | 40 |
| Min./max. ambient temperature | [°C] | -10/90 |
| Repeat accuracy | [mm] | 0.01 |
| Diameter of center bore | [mm] | 14 |

## Main view

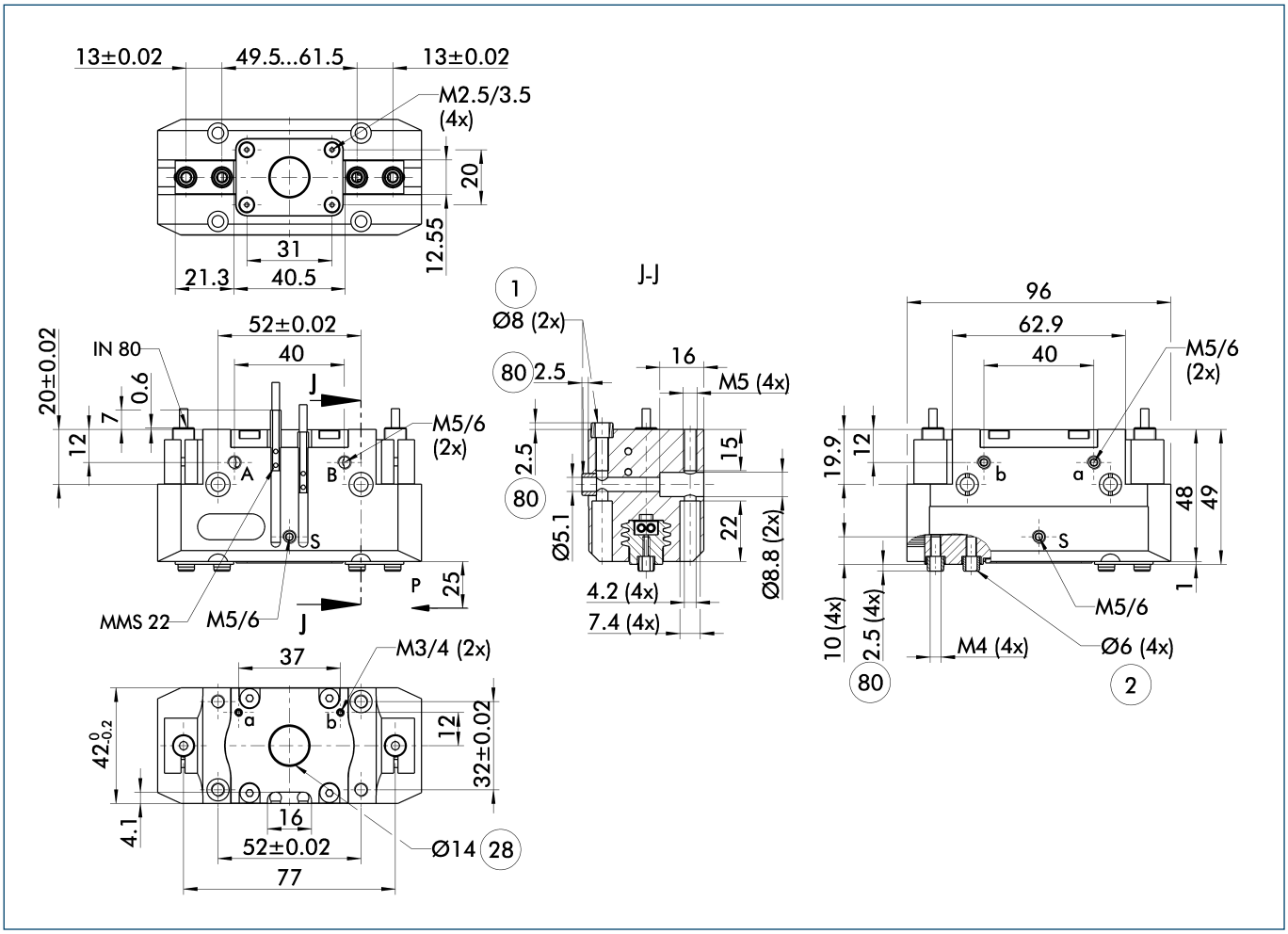


The drawing shows the gripper in the basic version with closed jaws, the dimensions do not include the options described below.

ⓘ The SDV-P pressure maintenance valve can be used as a gripping force maintenance device (see "Accessories" catalog section).

A, a Main/direct connection, gripper opening
B, b Main/direct connection, gripper closing
S Air purge connection
① Gripper connection
② Finger connection
㉘ Through-bore
㊽ Depth of the centering sleeve hole in the matching part

## Hose-free direct connection

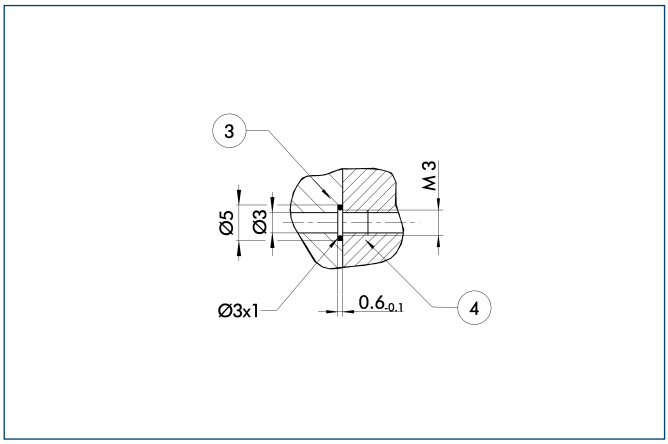


③ Adapter
④ Gripper

The direct connection is used for supplying compressed air without hoses. Instead, the pressure medium is fed through bore-holes in the mounting plate.

## Maximum permitted finger projection

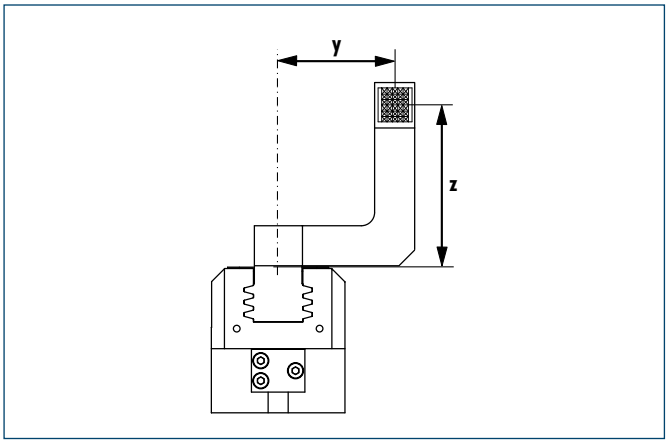


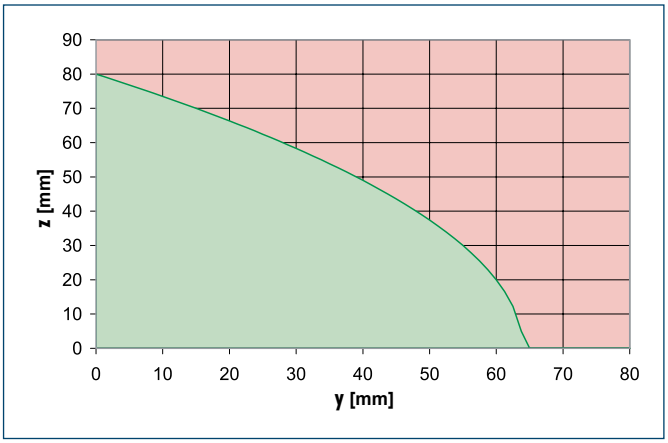


Permitted range
Inadmissible range

The curve applies to the basic version (stroke -1). For other versions, the curve will be parallel but offset in line with the max. permitted finger length.

## Quick-change Jaw System

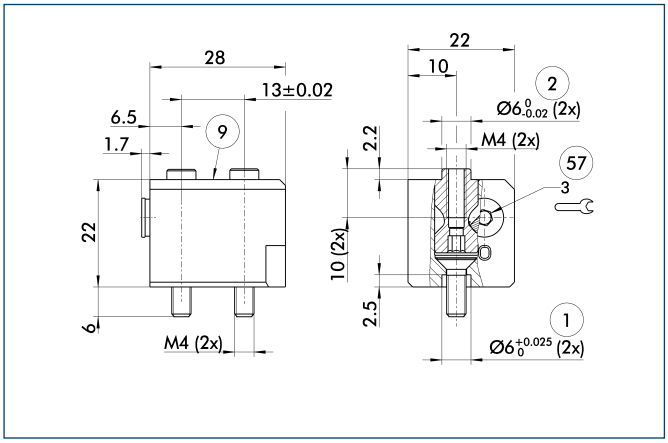


① Gripper connection
② Finger connection
⑨ For mounting screw connection diagram, see basic version
57 Locking

The BSWS quick-change jaw system enables top jaws to be changed on the gripper manually and rapidly. An adapter (BSWS-A) and a base (BSWS-B) are required for each gripper jaw.
For a reverse assembly without height set-up, one adapter (BSWS-A) and a kit (BSWS-U) per gripper jaw are required. Another effect of the BSWS-U is, that there are no disturbing fastening bores in the finger contour.

| Description | ID |
|---|---|
| Quick-change Jaw System adapter | |
| BSWS-A 64 | 0303022 |
| Quick-change Jaw System base | |
| BSWS-B 64 | 0303023 |
| Quick-change Jaw System reversed | |
| BSWS-U 64 | 0303041 |

## Universal intermediate jaw

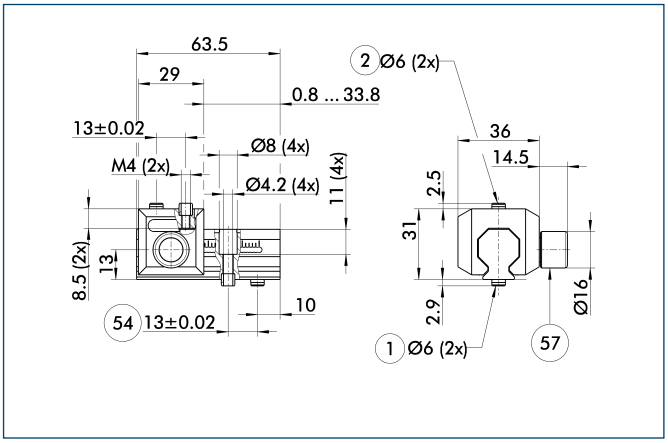


① Gripper connection
② Finger connection
54 Optional right or left connection
57 Locking

The universal intermediate jaw allows fast tool-free and reliable plugging and shifting of top jaws at the gripper.

| Description | ID | Grid dimension |
|---|---|---|
| Universal intermediate jaw | | |
| UZB 64 | 0300042 | 1.5 mm |

ⓘ The slide UZB-S can be removed completely and has to be ordered separately. Moreover, it allows a fast jaw change.

You can find more detailed information and individual parts of the above-mentioned accessories in the “Accessories” catalog section.

## Force measuring jaws

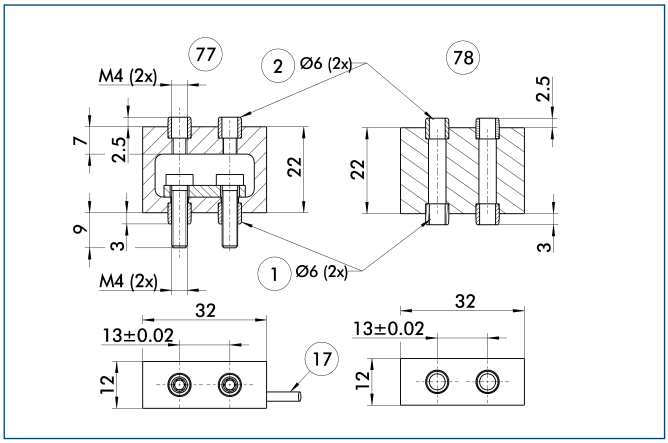


① Gripper connection
② Finger connection
⑰ Cable outlet
⑦⑦ Active intermediate jaws
⑦⑧ Passive intermediate jaws

Force measuring jaws measure gripping forces, but can also determine workpiece weights or dimensional deviations. There are active and passive intermediate jaws (FMS-ZBA or FMS-ZBP). At least one active force measuring jaw is required per gripper, the rest can be passive. For each active jaw, a FMS-A1 control unit and a FMS-A connection cable are required.

| Description | ID |
|---|---|
| Active intermediate jaws | |
| FMS-ZBA 64 | **0301832** |
| Passive intermediate jaws | |
| FMS-ZBP 64 | **0301833** |
| Electronic Processor | |
| FMS-A1 | **0301810** |
| Connection cables | |
| FMS-AK0200 | **0301820** |
| FMS-AK0500 | **0301821** |
| FMS-AK1000 | **0301822** |
| FMS-AK2000 | **0301823** |

## Finger blanks

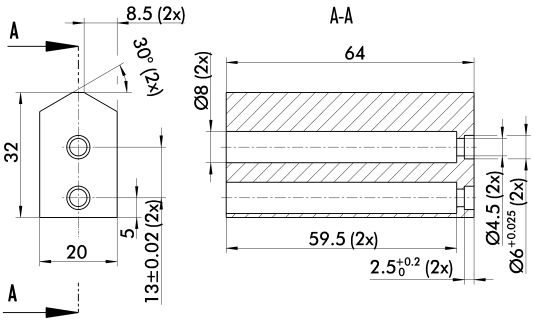


Finger blanks for customized subsequent machining

| Description | ID | Material | Scope of delivery |
|---|---|---|---|
| Finger blanks | | | |
| ABR-plus 64 | **0300010** | Aluminum | 1 |
| SBR-plus 64 | **0300020** | 16 MnCr 5 | 1 |

You can find more detailed information and individual parts of the above-mentioned accessories in the “Accessories” catalog section.

## Tolerance compensation unit

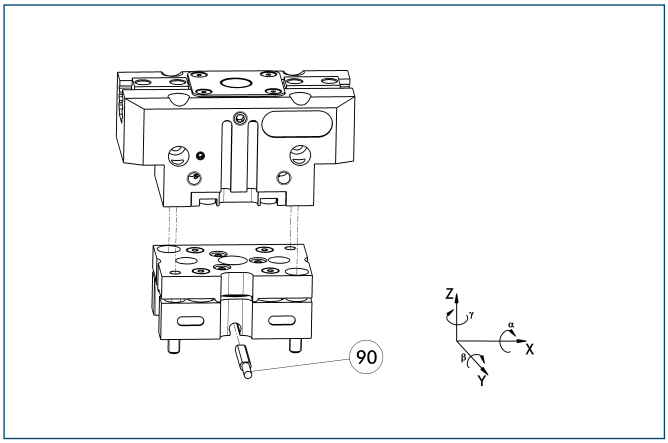


(90) Monitoring of locking

Grippers can be directly mounted without an adapter plate. Tolerance compensation unit and gripper have an identical screw connection diagram. Therefore the tolerance compensation units can be assembled later. Please consider the additional assembly height of the tolerance compensation unit. For details see catalog “Robot Accessories”.

| Description | ID | Locking | Deflection |
|---|---|---|---|
| Compensation unit | | | |
| TCU-080-3-MV-P | **0324792** | Yes | ±1.5°/±1°/±2° |
| TCU-080-3-OV-P | **0324793** | No | ±1.5°/±1°/±2° |

## Programmable magnetic switch

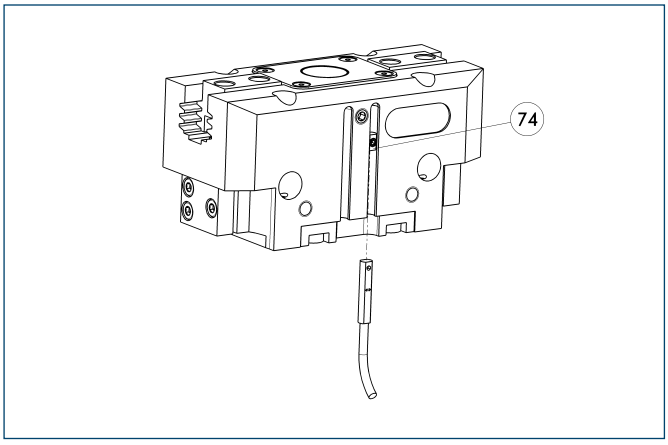


(74) Stop for MMS-P

Position monitoring with two programmable positions per sensor. The end position monitoring is mounted in the C-slot.

| Description | ID | Recommended product |
|---|---|---|
| Programmable magnetic switch | | |
| MMS-P 22-S-M8-PNP | **0301370** | • |
| MMSK-P 22-S-PNP | **0301371** | |
| Connection cables | | |
| KA BG08-L 4P-0500 | **0307767** | |
| KA BG08-L 4P-1000 | **0307768** | |
| KA BW08-L 4P-0500 | **0307765** | |
| KA BW08-L 4P-1000 | **0307766** | |
| Sensor Distributor | | |
| V2-M8-4P-2XM8-3P | **0301380** | |

ⓘ Please note the minimum permitted bending radii for the sensor cables, which are generally 35 mm.

ⓘ Per gripper one sensor (closer/NO) is required, optionally a cable extension.

## Compensation unit with spring reset

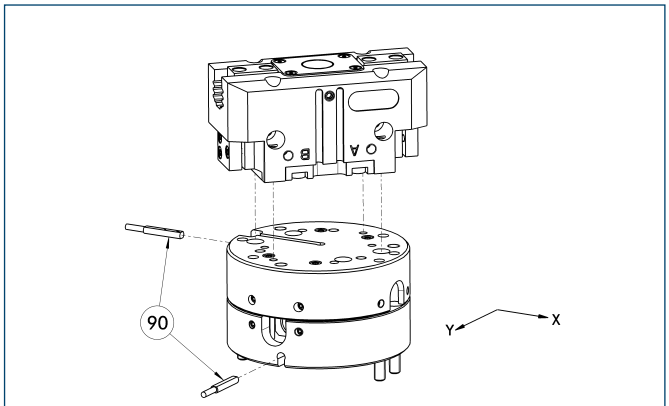


(90) Monitoring

Grippers can be directly mounted without using an adapter plate. For details see our catalog “Robot Accessories”.

| Description | ID | Compensation travel | Reset force |
|---|---|---|---|
| Compensation unit | | | |
| AGE-F-XY-063-1 | **0324940** | ±4 mm | 9 N |
| AGE-F-XY-063-2 | **0324941** | ±4 mm | 10 N |
| AGE-F-XY-063-3 | **0324942** | ±4 mm | 19.3 N |

## Electronic magnetic switches

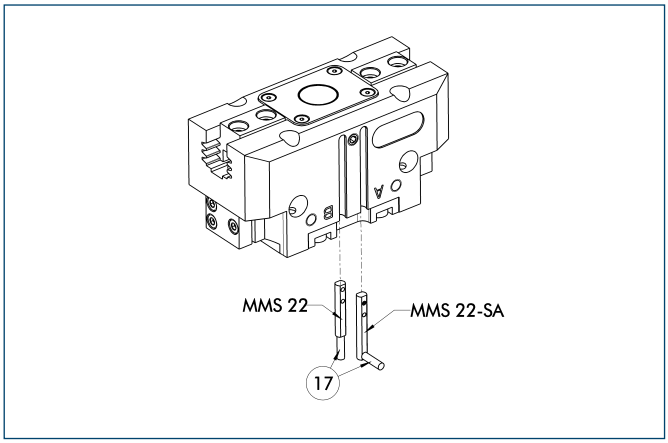


⑰ Cable outlet

End position monitoring for mounting in the C-slot

| Description | ID | Recommended product |
|---|---|---|
| Electronic magnetic switches | | |
| MMS 22-S-M5-PNP | **0301438** | |
| MMS 22-S-M5-NPN | **0301439** | |
| MMS 22-S-M8-PNP | **0301432** | • |
| MMS 22-S-M8-NPN | **0301433** | |
| MMSK 22-S-PNP | **0301434** | |
| MMSK 22-S-NPN | **0301435** | |
| Electronic magnetic switches with lateral cable outlet | | |
| MMS 22-S-M5-PNP-SA | **0301448** | |
| MMS 22-S-M5-NPN-SA | **0301449** | |
| MMS 22-S-M8-PNP-SA | **0301442** | • |
| MMS 22-S-M8-NPN-SA | **0301443** | |
| MMSK 22-S-PNP-SA | **0301444** | |
| MMSK 22-S-NPN-SA | **0301445** | |
| Reed Switches | | |
| RMS 22-S-M8 | **0377720** | • |
| Connection cables | | |
| KA BG05-L 3P-0300 | **0301652** | |
| KA BG08-L 3P-0300-PNP | **0301622** | |
| KA BG08-L 3P-0500-PNP | **0301623** | |
| KA BW05-L 3P-0300 | **0301650** | |
| KA BW08-L 3P-0300-NPN | **0301602** | |
| KA BW08-L 3P-0300-PNP | **0301594** | |
| KA BW08-L 3P-0500-NPN | **9641116** | |
| KA BW08-L 3P-0500-PNP | **0301502** | |
| Cable extensions | | |
| KV BW08-SG08 3P-0030-PNP | **0301495** | |
| KV BW08-SG08 3P-0100-PNP | **0301496** | |
| KV BW08-SG08 3P-0200-PNP | **0301497** | |

ⓘ Two sensors (closer/NO) are required for each gripper, plus extension cables as an option.

ⓘ Please note the minimum permitted bending radii for the sensor cables, which are generally 35 mm.

## Inductive proximity switches

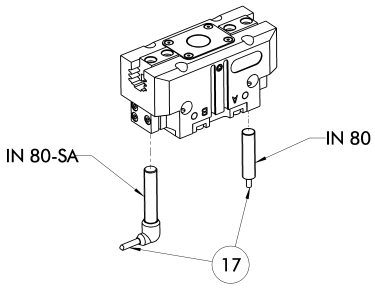


⑰ Cable outlet

End position monitoring for direct mounting

| Description | ID | Recommended product |
|---|---|---|
| Inductive proximity switches | | |
| IN 80-S-M8 | **0301478** | • |
| IN 80-S-M12 | **0301578** | |
| INK 80-S | **0301550** | |
| Inductive proximity switch with lateral outlet | | |
| IN 80-S-M12-SA | **0301587** | |
| IN 80-S-M8-SA | **0301483** | • |
| INK 80-S-SA | **0301566** | |
| Connection cables | | |
| KA BG08-L 3P-0300-PNP | **0301622** | |
| KA BG08-L 3P-0500-PNP | **0301623** | |
| KA BG12-L 3P-0500-PNP | **30016369** | |
| KA BW08-L 3P-0300-PNP | **0301594** | |
| KA BW08-L 3P-0500-PNP | **0301502** | |
| KA BW12-L 3P-0300-PNP | **0301503** | |
| KA BW12-L 3P-0500-PNP | **0301507** | |
| Cable extensions | | |
| KV BG12-SG12 3P-0030-PNP | **0301999** | |
| KV BG12-SG12 3P-0060-PNP | **0301998** | |
| KV BW08-SG08 3P-0030-PNP | **0301495** | |
| KV BW08-SG08 3P-0100-PNP | **0301496** | |
| KV BW08-SG08 3P-0200-PNP | **0301497** | |
| KV BW12-SG12 3P-0030-PNP | **0301595** | |
| KV BW12-SG12 3P-0100-PNP | **0301596** | |
| KV BW12-SG12 3P-0200-PNP | **0301597** | |

ⓘ Two sensors (closer/NO) are required for each gripper, plus extension cables as an option.

ⓘ Please note the minimum permitted bending radii for the sensor cables, which are generally 35 mm.

You can find more detailed information and individual parts of the above-mentioned accessories in the “Accessories” catalog section.

## Cylindrical Reed Switches

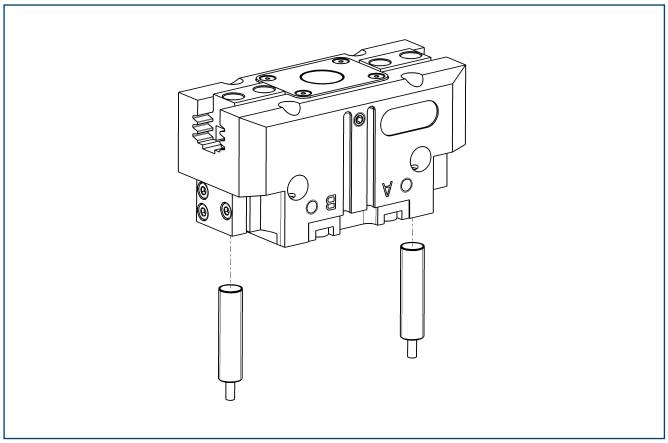

End position monitoring mounted with mounting kit

| Description | ID |
|---|---|
| Mounting kit for proximity switch | |
| AS-RMS 80 PGN/PZN-plus 64/80 | **0377725** |
| Reed Switches | |
| RMS 80-S-M8 | **0377721** |

ⓘ Two sensors (closer/NO) are required for each gripper, plus extension cables as an option.

ⓘ This mounting kit needs to be ordered optionally as an accessory.

ⓘ Please note the minimum permitted bending radii for the sensor cables, which are generally 35 mm.

## Analog position sensor

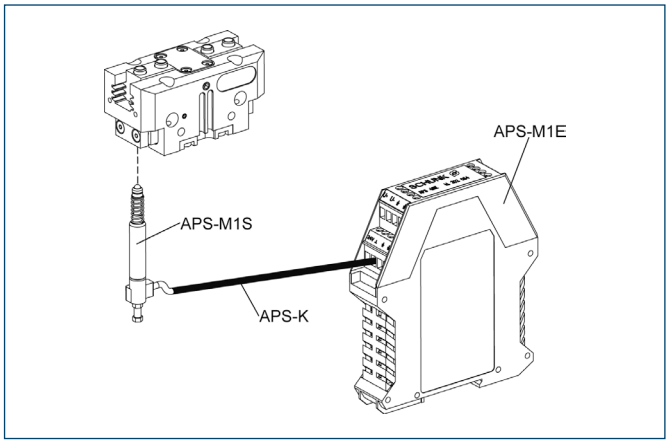


Analog multi position monitoring for any desired positions

| Description | ID |
|---|---|
| Mounting kit | |
| AS-APS-M1-64/1 | **0302075** |
| Connection cables | |
| APS-K0200 | **0302066** |
| APS-K0700 | **0302068** |
| Electronic Processor | |
| APS-M1E | **0302064** |
| Sensor | |
| APS-M1S | **0302062** |

ⓘ When using an APS system, for each gripper a mounting kit (AS-APS), an APS sensor (APS-M 1S, incl. 3 m cable) as well as an electronics (APS-M1e) are required.

ⓘ An extension cable (APS-K) can be connected between the sensor and the electronics as an option. The max. cable length between the sensor and the electronics is 10 m, between the electronics and their control unit (PLC) it is max. 1 m.

You can find more detailed information and individual parts of the above-mentioned accessories in the “Accessories” catalog section.

## Flexible Position Sensor

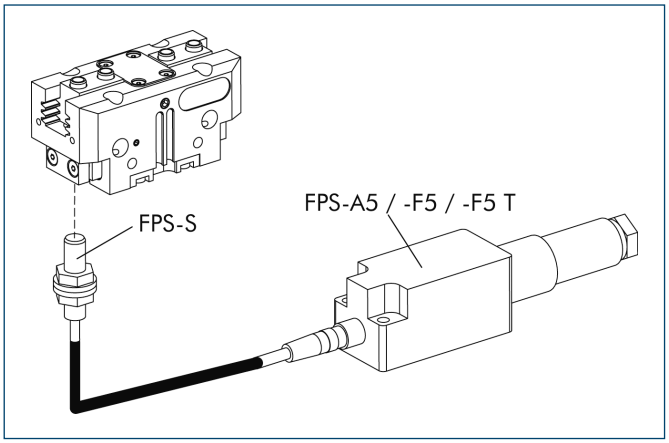


Flexible position monitoring of up to five positions

| Description | ID |
|---|---|
| Mounting kit for FPS | |
| AS-PGN/PZN-plus 64/1, PGN/PZN-plus 80/2 | **0301630** |
| Electronic Processor | |
| FPS-F5 | **0301805** |
| FPS-F5 T | **0301807** |
| Sensor | |
| FPS-S M8 | **0301704** |

ⓘ When using a FPS system, a FPS sensor (FPS-S) and a control unit (FPS-F5 / F5 T or A5) are required for each gripper as well as a mounting kit (AS), if listed. Cable extensions (KV) are available as options in the “Accessories” catalog section.

You can find more detailed information and individual parts of the above-mentioned accessories in the “Accessories” catalog section.

# PGB 100

**Pneumatic • 2-Finger Parallel Gripper • Universal Gripper**

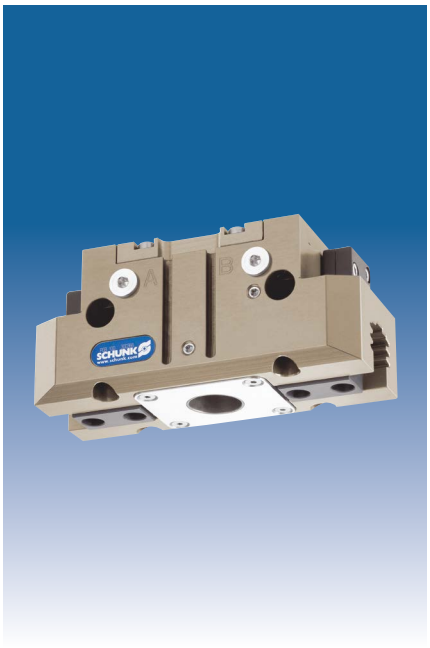

## Gripping force, I.D. gripping

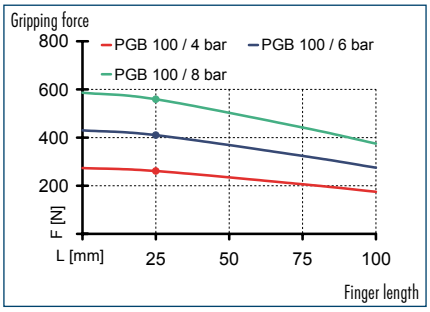


## Gripping force, O.D. gripping

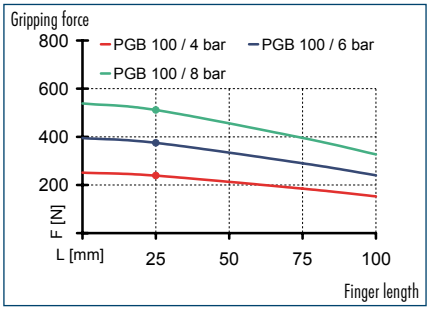


## Finger load

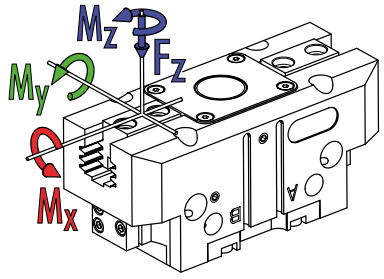


- $M_x$ max. 60.00 Nm
- $M_y$ max. 95.00 Nm
- $M_z$ max. 55.00 Nm
- $F_z$ max. 1500.0 N

ⓘ The indicated moments and forces are static values, apply per base jaw and may occur simultaneously. $M_y$ may arise in addition to the moment generated by the gripping force itself. If the max. permitted finger weight is exceeded, it is imperative to throttle the air pressure so that the jaw movement occurs without any hitting or bouncing. Service life may be reduced.

## Technical data

| Description | | PGB 100 |
|---|---|---|
| **ID** | | **0300366** |
| Stroke per finger | [mm] | 8 |
| Closing force | [N] | 380 |
| Opening force | [N] | 410 |
| Weight | [kg] | 0.78 |
| Recommended workpiece weight | [kg] | 2.1 |
| Air consumption per double stroke | [cm³] | 22 |
| Min./max. operating pressure | [bar] | 2.5/8 |
| Nominal operating pressure | [bar] | 6 |
| Closing/opening time | [s] | 0.07/0.07 |
| Max. permitted finger length | [mm] | 100 |
| Max. permitted weight per finger | [kg] | 0.6 |
| IP class | | 40 |
| Min./max. ambient temperature | [°C] | -10/90 |
| Repeat accuracy | [mm] | 0.01 |
| Diameter of center bore | [mm] | 18 |

## Main view

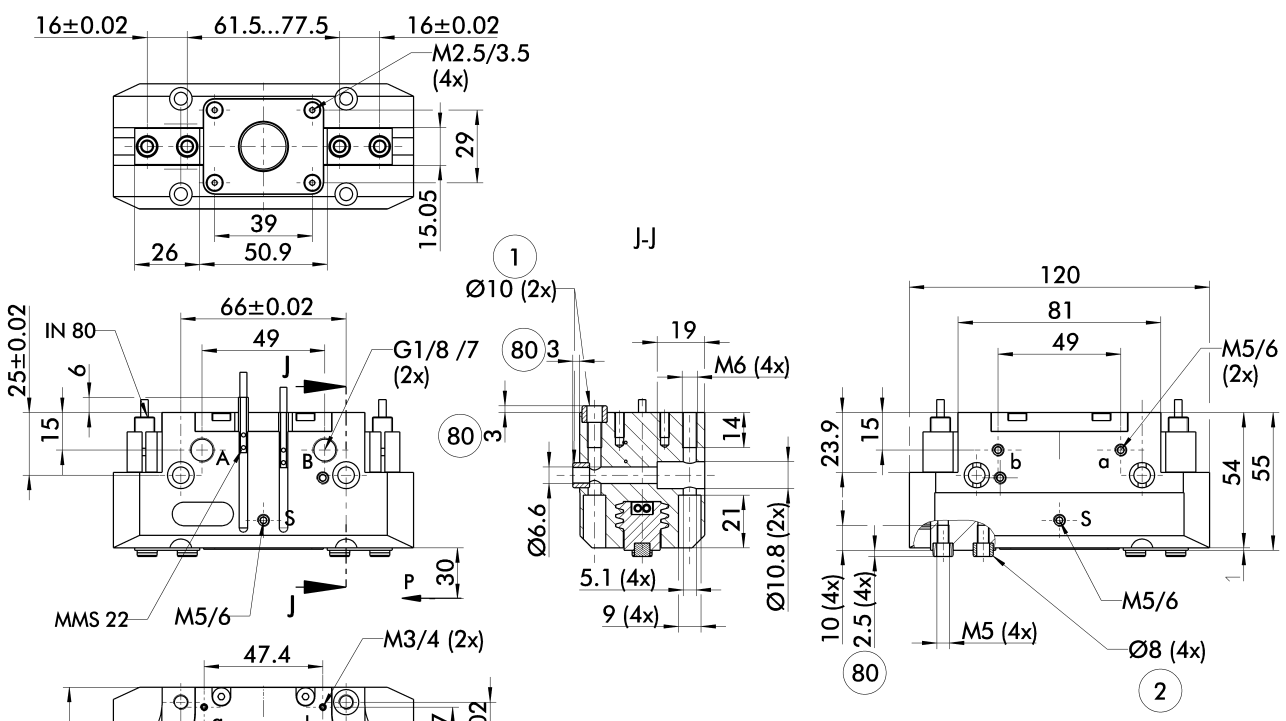


The drawing shows the gripper in the basic version with closed jaws, the dimensions do not include the options described below.

ⓘ The SDV-P pressure maintenance valve can be used as a gripping force maintenance device (see "Accessories" catalog section).

A, a Main/direct connection, gripper opening
B, b Main/direct connection, gripper closing
S Air purge connection
① Gripper connection
② Finger connection
㉘ Through-bore
㉚ Depth of the centering sleeve hole in the matching part

## Hose-free direct connection

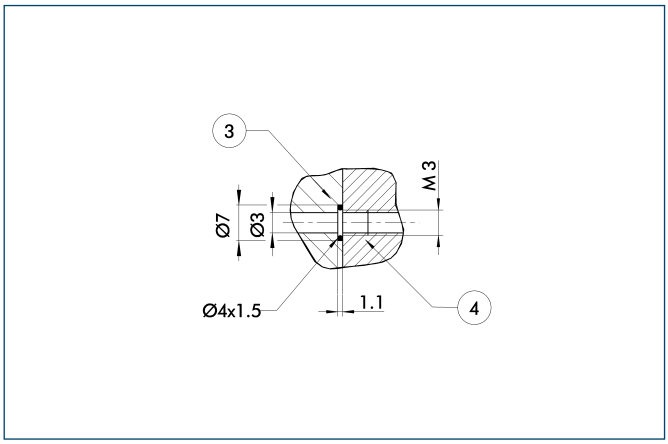


③ Adapter
④ Gripper

The direct connection is used for supplying compressed air without hoses. Instead, the pressure medium is fed through bore-holes in the mounting plate.

## Maximum permitted finger projection

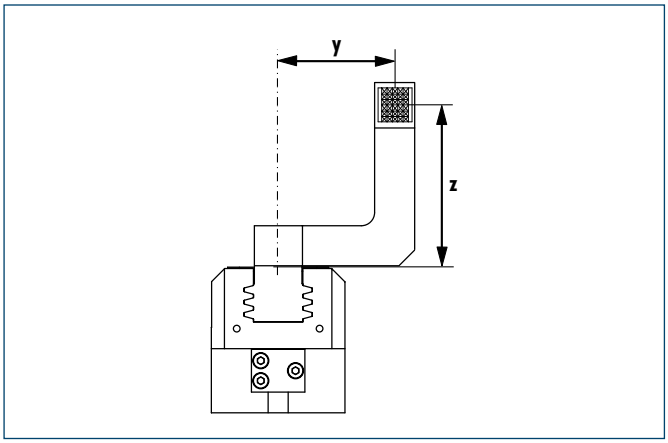


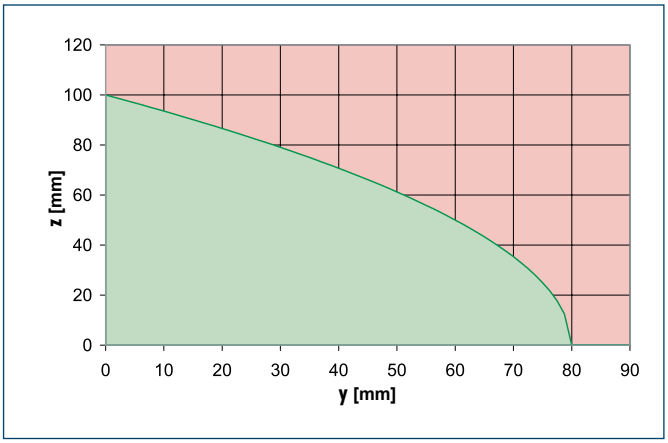


Permitted range
Inadmissible range

The curve applies to the basic version (stroke -1). For other versions, the curve will be parallel but offset in line with the max. permitted finger length.

## Quick-change Jaw System

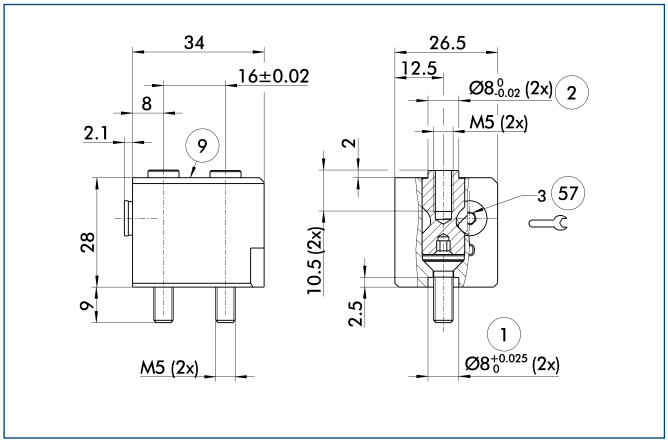


① Gripper connection
② Finger connection
⑨ For mounting screw connection diagram, see basic version
57 Locking

The BSWS quick-change jaw system enables top jaws to be changed on the gripper manually and rapidly. An adapter (BSWS-A) and a base (BSWS-B) are required for each gripper jaw.
For a reverse assembly without height set-up, one adapter (BSWS-A) and a kit (BSWS-U) per gripper jaw are required. Another effect of the BSWS-U is, that there are no disturbing fastening bores in the finger contour.

| Description | ID |
|---|---|
| Quick-change Jaw System adapter | |
| BSWS-A 80 | 0303024 |
| Quick-change Jaw System base | |
| BSWS-B 80 | 0303025 |
| Quick-change Jaw System reversed | |
| BSWS-U 80 | 0303042 |

## Universal intermediate jaw

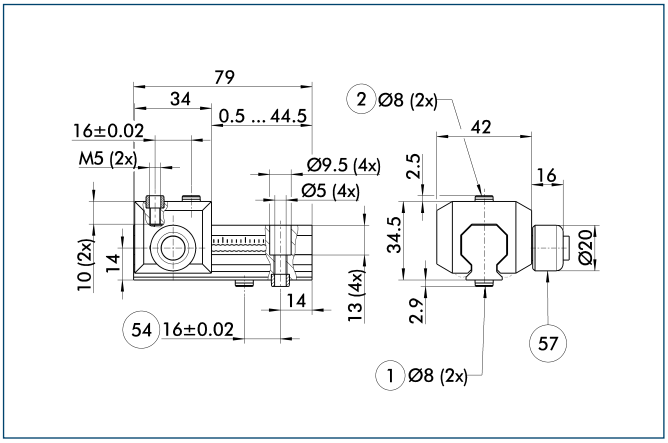


① Gripper connection
② Finger connection
54 Optional right or left connection
57 Locking

The universal intermediate jaw allows fast tool-free and reliable plugging and shifting of top jaws at the gripper.

| Description | ID | Grid dimension |
|---|---|---|
| Universal intermediate jaw | | |
| UZB 80 | 0300043 | 2 mm |
| UZB-S 80 | 5518271 | 2 mm |

ⓘ The slide UZB-S can be removed completely and has to be ordered separately. Moreover, it allows a fast jaw change.

You can find more detailed information and individual parts of the above-mentioned accessories in the "Accessories" catalog section.

## Force measuring jaws

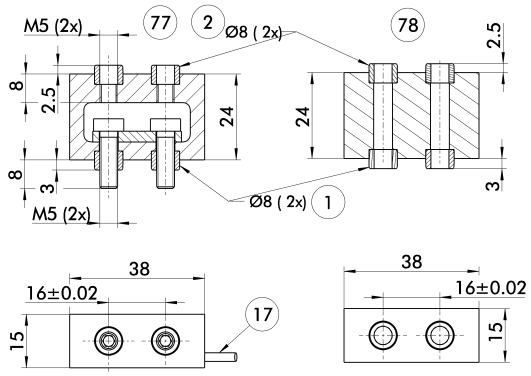


① Gripper connection
② Finger connection
⑰ Cable outlet
⑦⑦ Active intermediate jaws
⑦⑧ Passive intermediate jaws

Force measuring jaws measure gripping forces, but can also determine workpiece weights or dimensional deviations. There are active and passive intermediate jaws (FMS-ZBA or FMS-ZBP). At least one active force measuring jaw is required per gripper, the rest can be passive. For each active jaw, a FMS-A1 control unit and a FMS-A connection cable are required.

| Description | ID |
|---|---|
| Active intermediate jaws | |
| FMS-ZBA 80 | **0301834** |
| Passive intermediate jaws | |
| FMS-ZBP 80 | **0301835** |
| Electronic Processor | |
| FMS-A1 | **0301810** |
| Connection cables | |
| FMS-AK0200 | **0301820** |
| FMS-AK0500 | **0301821** |
| FMS-AK1000 | **0301822** |
| FMS-AK2000 | **0301823** |

## Finger blanks

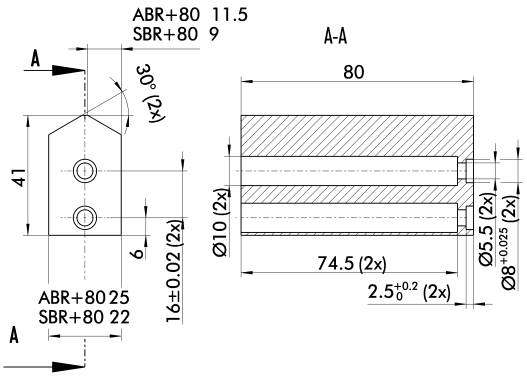


Finger blanks for customized subsequent machining

| Description | ID | Material | Scope of delivery |
|---|---|---|---|
| Finger blanks | | | |
| ABR-plus 80 | **0300011** | Aluminum | 1 |
| SBR-plus 80 | **0300021** | 16 MnCr 5 | 1 |

You can find more detailed information and individual parts of the above-mentioned accessories in the “Accessories” catalog section.

## Tolerance compensation unit

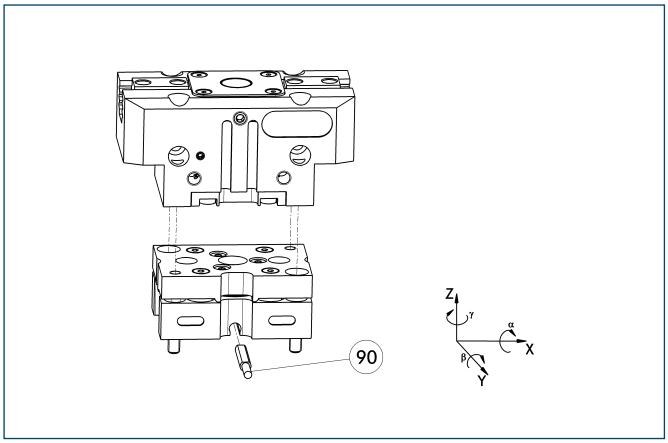


(90) Monitoring of locking

Grippers can be directly mounted without an adapter plate. Tolerance compensation unit and gripper have an identical screw connection diagram. Therefore the tolerance compensation units can be assembled later. Please consider the additional assembly height of the tolerance compensation unit. For details see catalog “Robot Accessories”.

| Description | ID | Locking | Deflection |
|---|---|---|---|
| Compensation unit | | | |
| TCU-100-2-MV-P | **0324808** | Yes | ±1.5°/±1°/±1.2° |
| TCU-100-3-OV-P | **0324811** | No | ±1.5°/±1°/±1.2° |

## Programmable magnetic switch

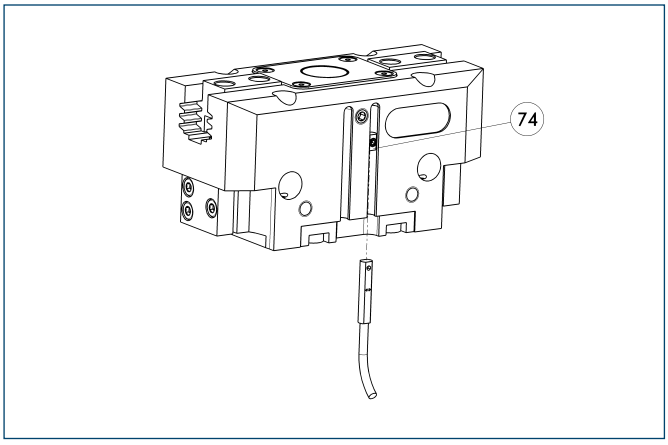


(74) Stop for MMS-P

Position monitoring with two programmable positions per sensor. The end position monitoring is mounted in the C-slot.

| Description | ID | Recommended product |
|---|---|---|
| Programmable magnetic switch | | |
| MMS-P 22-S-M8-PNP | **0301370** | • |
| MMSK-P 22-S-PNP | **0301371** | |
| Connection cables | | |
| KA BG08-L 4P-0500 | **0307767** | |
| KA BG08-L 4P-1000 | **0307768** | |
| KA BW08-L 4P-0500 | **0307765** | |
| KA BW08-L 4P-1000 | **0307766** | |
| Sensor Distributor | | |
| V2-M8-4P-2XM8-3P | **0301380** | |

ⓘ Please note the minimum permitted bending radii for the sensor cables, which are generally 35 mm.

ⓘ Per gripper one sensor (closer/NO) is required, optionally a cable extension.

## Compensation unit with spring reset

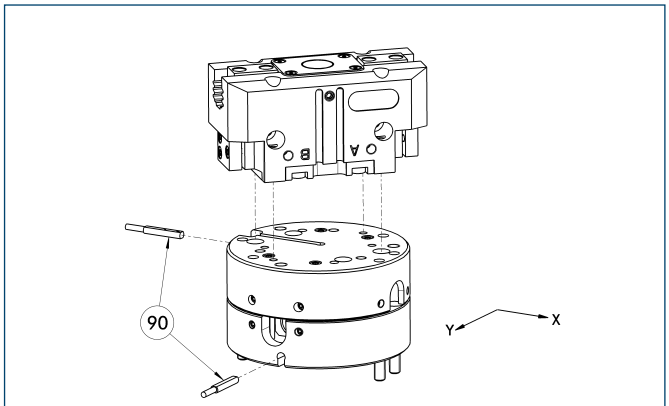


(90) Monitoring

Grippers can be directly mounted without using an adapter plate. For details see our catalog “Robot Accessories”.

| Description | ID | Compensation travel | Reset force |
|---|---|---|---|
| Compensation unit | | | |
| AGE-F-XY-080-1 | **0324960** | ±5 mm | 28.3 N |
| AGE-F-XY-080-2 | **0324961** | ±5 mm | 42.5 N |
| AGE-F-XY-080-3 | **0324962** | ±5 mm | 47.6 N |

## Electronic magnetic switches

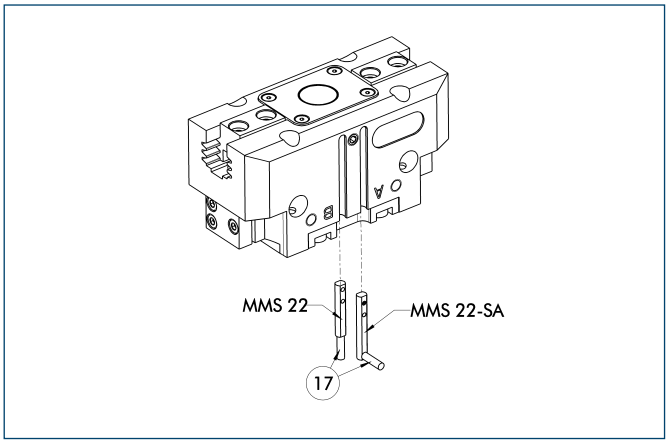


⑰ Cable outlet

End position monitoring for mounting in the C-slot

| Description | ID | Recommended product |
|---|---|---|
| Electronic magnetic switches | | |
| MMS 22-S-M5-PNP | **0301438** | |
| MMS 22-S-M5-NPN | **0301439** | |
| MMS 22-S-M8-PNP | **0301432** | • |
| MMS 22-S-M8-NPN | **0301433** | |
| MMSK 22-S-PNP | **0301434** | |
| MMSK 22-S-NPN | **0301435** | |
| Electronic magnetic switches with lateral cable outlet | | |
| MMS 22-S-M5-PNP-SA | **0301448** | |
| MMS 22-S-M5-NPN-SA | **0301449** | |
| MMS 22-S-M8-PNP-SA | **0301442** | • |
| MMS 22-S-M8-NPN-SA | **0301443** | |
| MMSK 22-S-PNP-SA | **0301444** | |
| MMSK 22-S-NPN-SA | **0301445** | |
| Reed Switches | | |
| RMS 22-S-M8 | **0377720** | • |
| Connection cables | | |
| KA BG05-L 3P-0300 | **0301652** | |
| KA BG08-L 3P-0300-PNP | **0301622** | |
| KA BG08-L 3P-0500-PNP | **0301623** | |
| KA BW05-L 3P-0300 | **0301650** | |
| KA BW08-L 3P-0300-NPN | **0301602** | |
| KA BW08-L 3P-0300-PNP | **0301594** | |
| KA BW08-L 3P-0500-NPN | **9641116** | |
| KA BW08-L 3P-0500-PNP | **0301502** | |
| Cable extensions | | |
| KV BW08-SG08 3P-0030-PNP | **0301495** | |
| KV BW08-SG08 3P-0100-PNP | **0301496** | |
| KV BW08-SG08 3P-0200-PNP | **0301497** | |

ⓘ Two sensors (closer/NO) are required for each gripper, plus extension cables as an option.

ⓘ Please note the minimum permitted bending radii for the sensor cables, which are generally 35 mm.

## Inductive proximity switches

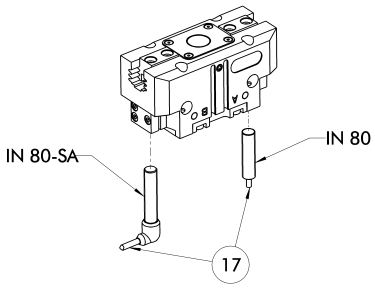


⑰ Cable outlet

End position monitoring for direct mounting

| Description | ID | Recommended product |
|---|---|---|
| Inductive proximity switches | | |
| IN 80-S-M8 | **0301478** | • |
| IN 80-S-M12 | **0301578** | |
| INK 80-S | **0301550** | |
| Inductive proximity switch with lateral outlet | | |
| IN 80-S-M12-SA | **0301587** | |
| IN 80-S-M8-SA | **0301483** | • |
| INK 80-S-SA | **0301566** | |
| Connection cables | | |
| KA BG08-L 3P-0300-PNP | **0301622** | |
| KA BG08-L 3P-0500-PNP | **0301623** | |
| KA BG12-L 3P-0500-PNP | **30016369** | |
| KA BW08-L 3P-0300-PNP | **0301594** | |
| KA BW08-L 3P-0500-PNP | **0301502** | |
| KA BW12-L 3P-0300-PNP | **0301503** | |
| KA BW12-L 3P-0500-PNP | **0301507** | |
| Cable extensions | | |
| KV BG12-SG12 3P-0030-PNP | **0301999** | |
| KV BG12-SG12 3P-0060-PNP | **0301998** | |
| KV BW08-SG08 3P-0030-PNP | **0301495** | |
| KV BW08-SG08 3P-0100-PNP | **0301496** | |
| KV BW08-SG08 3P-0200-PNP | **0301497** | |
| KV BW12-SG12 3P-0030-PNP | **0301595** | |
| KV BW12-SG12 3P-0100-PNP | **0301596** | |
| KV BW12-SG12 3P-0200-PNP | **0301597** | |

ⓘ Two sensors (closer/NO) are required for each gripper, plus extension cables as an option.

ⓘ Please note the minimum permitted bending radii for the sensor cables, which are generally 35 mm.

You can find more detailed information and individual parts of the above-mentioned accessories in the “Accessories” catalog section.

## Cylindrical Reed Switches

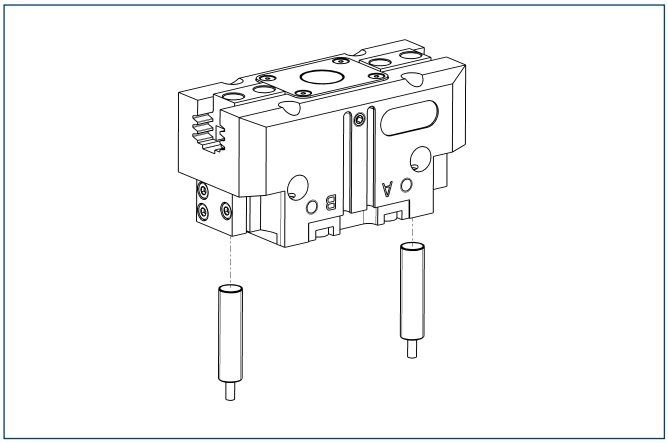

End position monitoring mounted with mounting kit

| Description | ID |
|---|---|
| Mounting kit for proximity switch | |
| AS-RMS 80 PGN/PZN-plus 64/80 | **0377725** |
| Reed Switches | |
| RMS 80-S-M8 | **0377721** |

ⓘ Two sensors (closer/NO) are required for each gripper, plus extension cables as an option.

ⓘ This mounting kit needs to be ordered optionally as an accessory.

ⓘ Please note the minimum permitted bending radii for the sensor cables, which are generally 35 mm.

## Analog position sensor

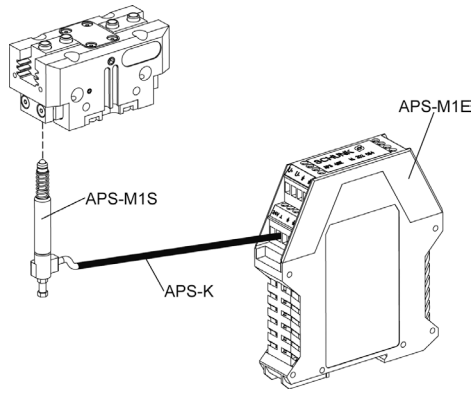


Analog multi position monitoring for any desired positions

| Description | ID |
|---|---|
| Mounting kit | |
| AS-APS-M1-80/1 | **0302077** |
| Connection cables | |
| APS-K0200 | **0302066** |
| APS-K0700 | **0302068** |
| Electronic Processor | |
| APS-M1E | **0302064** |
| Sensor | |
| APS-M1S | **0302062** |

ⓘ When using an APS system, for each gripper a mounting kit (AS-APS), an APS sensor (APS-M 1S, incl. 3 m cable) as well as an electronics (APS-M1e) are required.

ⓘ An extension cable (APS-K) can be connected between the sensor and the electronics as an option. The max. cable length between the sensor and the electronics is 10 m, between the electronics and their control unit (PLC) it is max. 1 m.

You can find more detailed information and individual parts of the above-mentioned accessories in the “Accessories” catalog section.

## Flexible Position Sensor

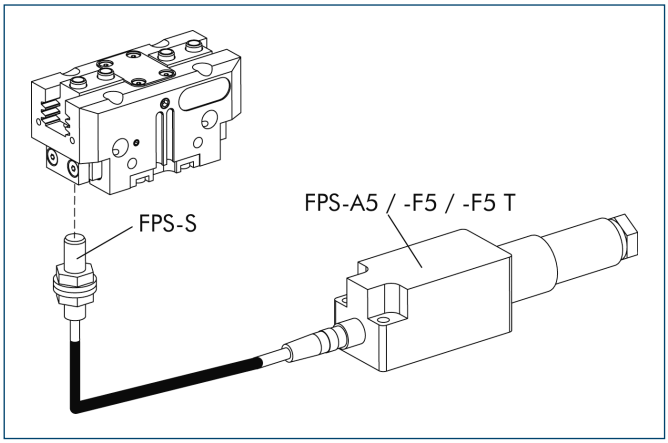


Flexible position monitoring of up to five positions

| Description | ID |
|---|---|
| Mounting kit for FPS | |
| AS-PGN-plus/PZN-plus 80/1, PZB 80/100 | **0301632** |
| Electronic Processor | |
| FPS-F5 | **0301805** |
| FPS-F5 T | **0301807** |
| Sensor | |
| FPS-S M8 | **0301704** |

ⓘ When using a FPS system, a FPS sensor (FPS-S) and a control unit (FPS-F5 / F5 T or A5) are required for each gripper as well as a mounting kit (AS), if listed. Cable extensions (KV) are available as options in the “Accessories” catalog section.

You can find more detailed information and individual parts of the above-mentioned accessories in the “Accessories” catalog section.

# PGB 125

**Pneumatic • 2-Finger Parallel Gripper • Universal Gripper**



## Gripping force, I.D. gripping

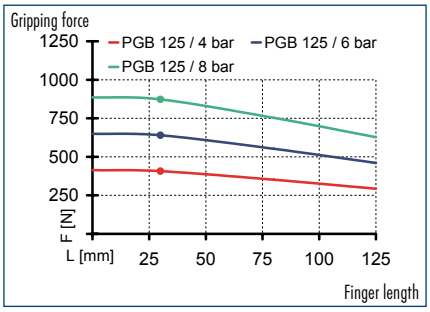


## Gripping force, O.D. gripping

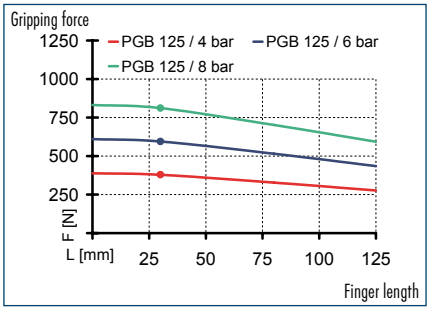


## Finger load

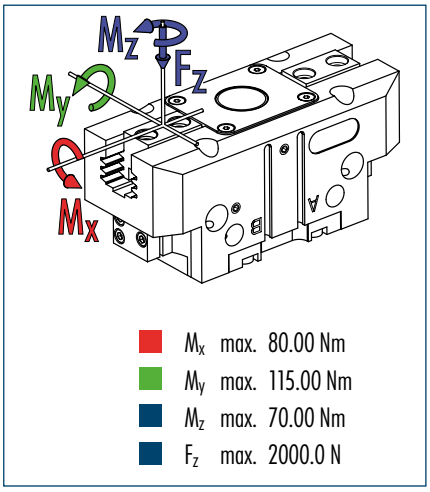


- $M_x$ max. 80.00 Nm
- $M_y$ max. 115.00 Nm
- $M_z$ max. 70.00 Nm
- $F_z$ max. 2000.0 N

ⓘ The indicated moments and forces are static values, apply per base jaw and may occur simultaneously. $M_y$ may arise in addition to the moment generated by the gripping force itself. If the max. permitted finger weight is exceeded, it is imperative to throttle the air pressure so that the jaw movement occurs without any hitting or bouncing. Service life may be reduced.

## Technical data

| Description | | PGB 125 |
|---|---|---|
| **ID** | | **0300369** |
| Stroke per finger | [mm] | 10 |
| Closing force | [N] | 610 |
| Opening force | [N] | 640 |
| Weight | [kg] | 1.32 |
| Recommended workpiece weight | [kg] | 3.3 |
| Air consumption per double stroke | [cm³] | 32 |
| Min./max. operating pressure | [bar] | 2.5/8 |
| Nominal operating pressure | [bar] | 6 |
| Closing/opening time | [s] | 0.08/0.08 |
| Max. permitted finger length | [mm] | 125 |
| Max. permitted weight per finger | [kg] | 1.1 |
| IP class | | 40 |
| Min./max. ambient temperature | [°C] | -10/90 |
| Repeat accuracy | [mm] | 0.01 |
| Diameter of center bore | [mm] | 24 |

## Main view

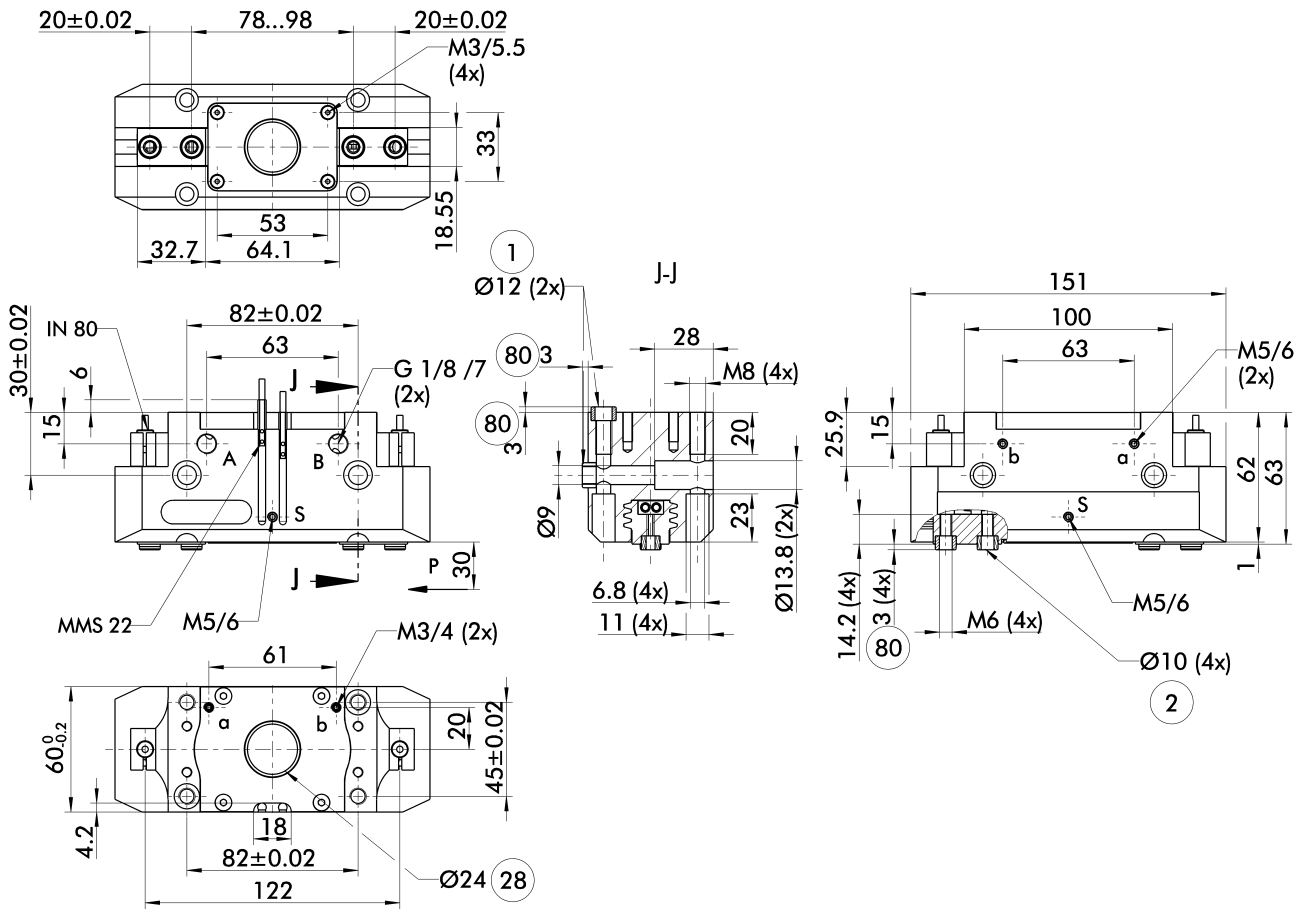


The drawing shows the gripper in the basic version with closed jaws, the dimensions do not include the options described below.

ⓘ The SDV-P pressure maintenance valve can be used as a gripping force maintenance device (see "Accessories" catalog section).

A, a Main/direct connection, gripper opening
B, b Main/direct connection, gripper closing
S Air purge connection
① Gripper connection
② Finger connection
㉘ Through-bore
㉚ Depth of the centering sleeve hole in the matching part

## Maximum permitted finger projection

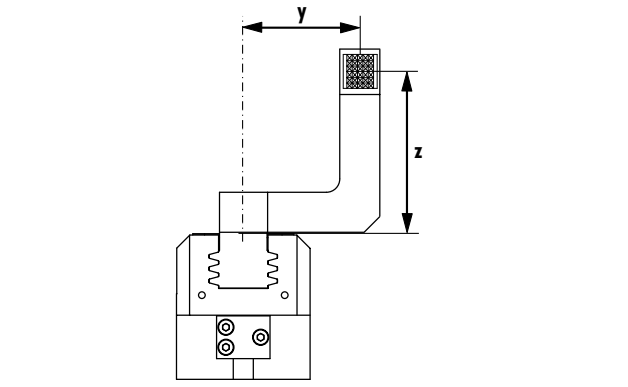


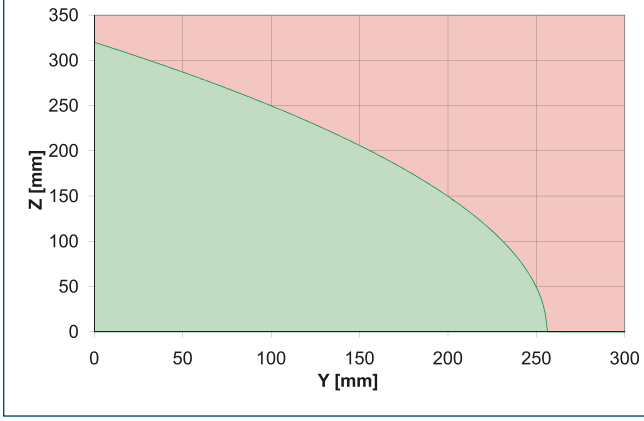


Permitted range
Inadmissible range

The curve applies to the basic version (stroke -1). For other versions, the curve will be parallel but offset in line with the max. permitted finger length.

## Quick-change Jaw System

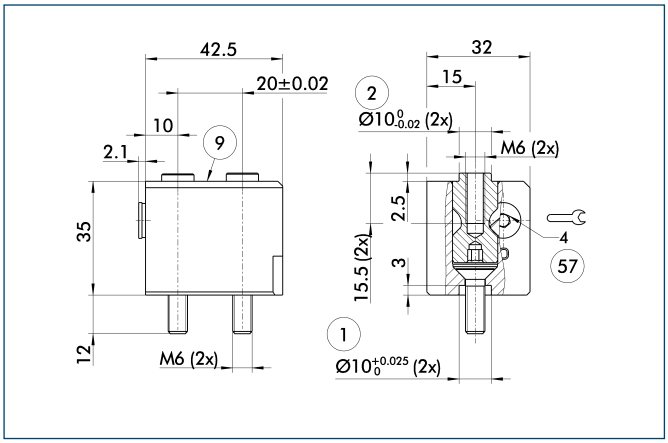


① Gripper connection
② Finger connection
⑨ For mounting screw connection diagram, see basic version
㊼ Locking

The BSWS quick-change jaw system enables top jaws to be changed on the gripper manually and rapidly. An adapter (BSWS-A) and a base (BSWS-B) are required for each gripper jaw.
For a reverse assembly without height set-up, one adapter (BSWS-A) and a kit (BSWS-U) per gripper jaw are required. Another effect of the BSWS-U is, that there are no disturbing fastening bores in the finger contour.

| Description | ID |
|---|---|
| Quick-change Jaw System adapter | |
| BSWS-A 100 | **0303026** |
| Quick-change Jaw System base | |
| BSWS-B 100 | **0303027** |
| Quick-change Jaw System reversed | |
| BSWS-U 100 | **0303043** |

## Universal intermediate jaw

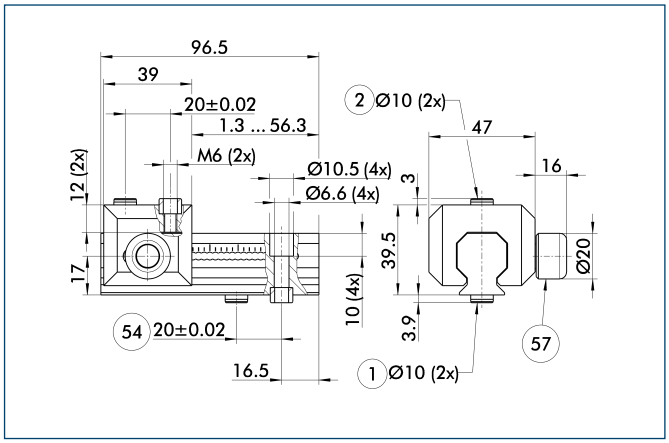


① Gripper connection
② Finger connection
㊿④ Optional right or left connection
㊼ Locking

The universal intermediate jaw allows fast tool-free and reliable plugging and shifting of top jaws at the gripper.

| Description | ID | Grid dimension |
|---|---|---|
| Universal intermediate jaw | | |
| UZB 100 | **0300044** | 2.5 mm |
| UZB-S 100 | **5518272** | 2.5 mm |

ⓘ The slide UZB-S can be removed completely and has to be ordered separately. Moreover, it allows a fast jaw change.

You can find more detailed information and individual parts of the above-mentioned accessories in the “Accessories” catalog section.

## Force measuring jaws

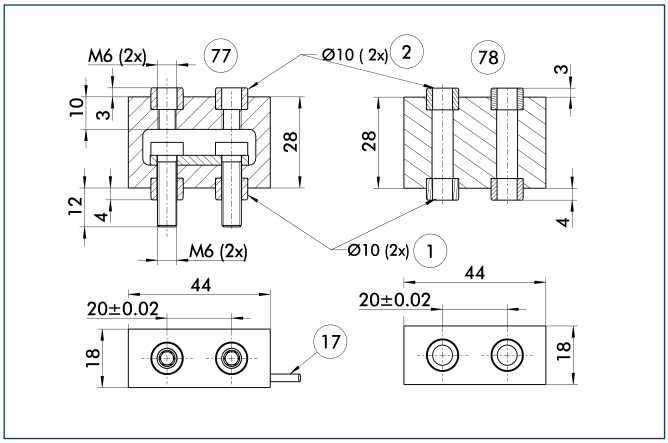


① Gripper connection
② Finger connection
⑰ Cable outlet
⑦⑦ Active intermediate jaws
⑦⑧ Passive intermediate jaws

Force measuring jaws measure gripping forces, but can also determine workpiece weights or dimensional deviations. There are active and passive intermediate jaws (FMS-ZBA or FMS-ZBP). At least one active force measuring jaw is required per gripper, the rest can be passive. For each active jaw, a FMS-A1 control unit and a FMS-A connection cable are required.

| Description | ID |
|---|---|
| Active intermediate jaws | |
| FMS-ZBA 100 | **0301836** |
| Passive intermediate jaws | |
| FMS-ZBP 100 | **0301837** |
| Electronic Processor | |
| FMS-A1 | **0301810** |
| Connection cables | |
| FMS-AK0200 | **0301820** |
| FMS-AK0500 | **0301821** |
| FMS-AK1000 | **0301822** |
| FMS-AK2000 | **0301823** |

## Finger blanks

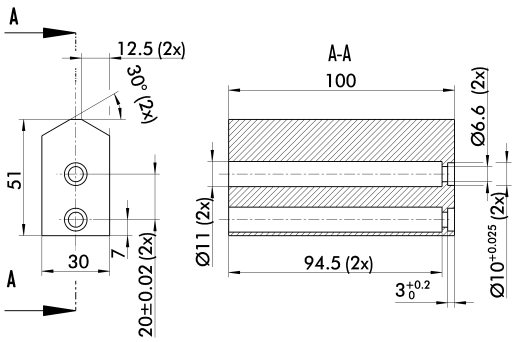


Finger blanks for customized subsequent machining

| Description | ID | Material | Scope of delivery |
|---|---|---|---|
| Finger blanks | | | |
| ABR-plus 100 | **0300012** | Aluminum | 1 |
| SBR-plus 100 | **0300022** | 16 MnCr 5 | 1 |

You can find more detailed information and individual parts of the above-mentioned accessories in the “Accessories” catalog section.

## Tolerance compensation unit

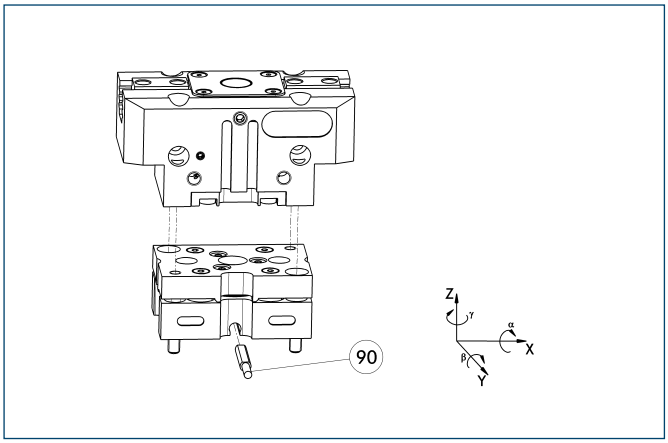


(90) Monitoring of locking

Grippers can be directly mounted without an adapter plate. Tolerance compensation unit and gripper have an identical screw connection diagram. Therefore the tolerance compensation units can be assembled later. Please consider the additional assembly height of the tolerance compensation unit. For details see catalog “Robot Accessories”.

| Description | ID | Locking | Deflection |
|---|---|---|---|
| Compensation unit | | | |
| TCU-125-3-MV-P | **0324828** | Yes | ±1.5°/±1°/±1.5° |
| TCU-125-3-OV-P | **0324829** | No | ±1.5°/±1°/±1.5° |

## Programmable magnetic switch

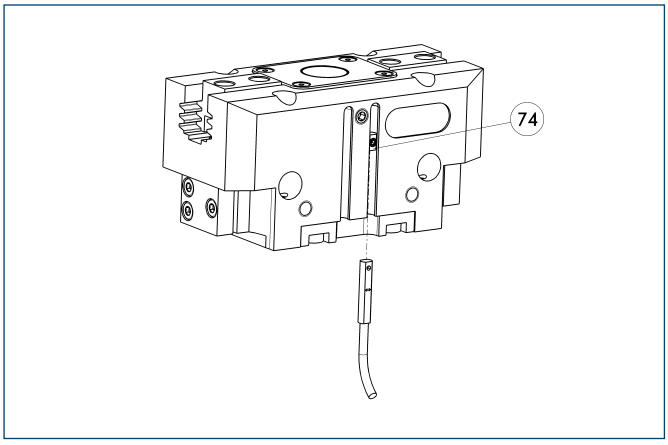


(74) Stop for MMS-P

Position monitoring with two programmable positions per sensor. The end position monitoring is mounted in the C-slot.

| Description | ID | Recommended product |
|---|---|---|
| Programmable magnetic switch | | |
| MMS-P 22-S-M8-PNP | **0301370** | • |
| MMSK-P 22-S-PNP | **0301371** | |
| Connection cables | | |
| KA BG08-L 4P-0500 | **0307767** | |
| KA BG08-L 4P-1000 | **0307768** | |
| KA BW08-L 4P-0500 | **0307765** | |
| KA BW08-L 4P-1000 | **0307766** | |
| Sensor Distributor | | |
| V2-M8-4P-2XM8-3P | **0301380** | |

ⓘ Please note the minimum permitted bending radii for the sensor cables, which are generally 35 mm.

ⓘ Per gripper one sensor (closer/NO) is required, optionally a cable extension.

## Compensation unit with spring reset

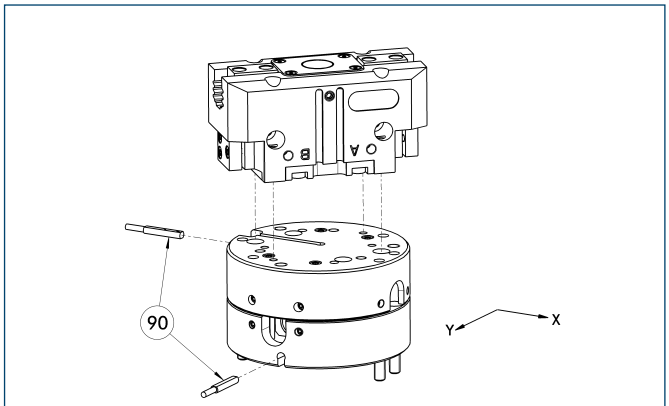


(90) Monitoring

Grippers can be directly mounted without using an adapter plate. For details see our catalog “Robot Accessories”.

| Description | ID | Compensation travel | Reset force |
|---|---|---|---|
| Compensation unit | | | |
| AGE-F-XY-080-1 | **0324960** | ±5 mm | 28.3 N |
| AGE-F-XY-080-2 | **0324961** | ±5 mm | 42.5 N |
| AGE-F-XY-080-3 | **0324962** | ±5 mm | 47.6 N |

## Electronic magnetic switches

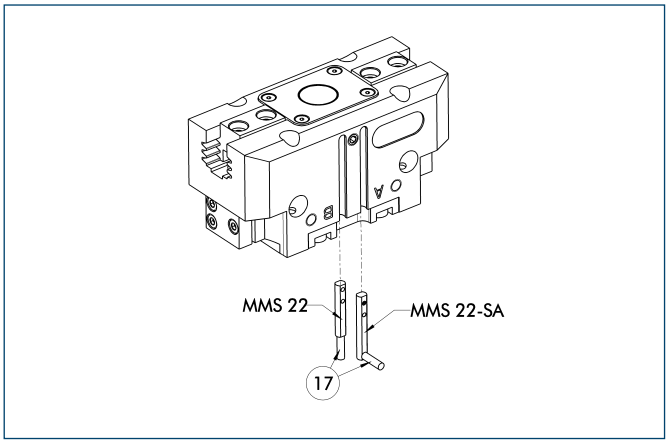


⑰ Cable outlet

End position monitoring for mounting in the C-slot

| Description | ID | Recommended product |
|---|---|---|
| Electronic magnetic switches | | |
| MMS 22-S-M5-PNP | **0301438** | |
| MMS 22-S-M5-NPN | **0301439** | |
| MMS 22-S-M8-PNP | **0301432** | • |
| MMS 22-S-M8-NPN | **0301433** | |
| MMSK 22-S-PNP | **0301434** | |
| MMSK 22-S-NPN | **0301435** | |
| Electronic magnetic switches with lateral cable outlet | | |
| MMS 22-S-M5-PNP-SA | **0301448** | |
| MMS 22-S-M5-NPN-SA | **0301449** | |
| MMS 22-S-M8-PNP-SA | **0301442** | • |
| MMS 22-S-M8-NPN-SA | **0301443** | |
| MMSK 22-S-PNP-SA | **0301444** | |
| MMSK 22-S-NPN-SA | **0301445** | |
| Reed Switches | | |
| RMS 22-S-M8 | **0377720** | • |
| Connection cables | | |
| KA BG05-L 3P-0300 | **0301652** | |
| KA BG08-L 3P-0300-PNP | **0301622** | |
| KA BG08-L 3P-0500-PNP | **0301623** | |
| KA BW05-L 3P-0300 | **0301650** | |
| KA BW08-L 3P-0300-NPN | **0301602** | |
| KA BW08-L 3P-0300-PNP | **0301594** | |
| KA BW08-L 3P-0500-NPN | **9641116** | |
| KA BW08-L 3P-0500-PNP | **0301502** | |
| Cable extensions | | |
| KV BW08-SG08 3P-0030-PNP | **0301495** | |
| KV BW08-SG08 3P-0100-PNP | **0301496** | |
| KV BW08-SG08 3P-0200-PNP | **0301497** | |

ⓘ Two sensors (closer/NO) are required for each gripper, plus extension cables as an option.

ⓘ Please note the minimum permitted bending radii for the sensor cables, which are generally 35 mm.

## Inductive proximity switches

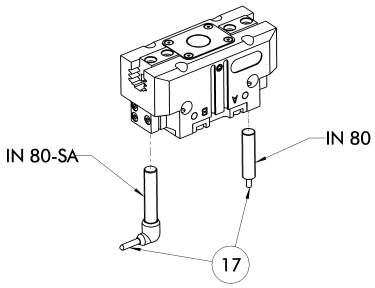


⑰ Cable outlet

End position monitoring for direct mounting

| Description | ID | Recommended product |
|---|---|---|
| Inductive proximity switches | | |
| IN 80-S-M8 | **0301478** | • |
| IN 80-S-M12 | **0301578** | |
| INK 80-S | **0301550** | |
| Inductive proximity switch with lateral outlet | | |
| IN 80-S-M12-SA | **0301587** | |
| IN 80-S-M8-SA | **0301483** | • |
| INK 80-S-SA | **0301566** | |
| Connection cables | | |
| KA BG08-L 3P-0300-PNP | **0301622** | |
| KA BG08-L 3P-0500-PNP | **0301623** | |
| KA BG12-L 3P-0500-PNP | **30016369** | |
| KA BW08-L 3P-0300-PNP | **0301594** | |
| KA BW08-L 3P-0500-PNP | **0301502** | |
| KA BW12-L 3P-0300-PNP | **0301503** | |
| KA BW12-L 3P-0500-PNP | **0301507** | |
| Cable extensions | | |
| KV BG12-SG12 3P-0030-PNP | **0301999** | |
| KV BG12-SG12 3P-0060-PNP | **0301998** | |
| KV BW08-SG08 3P-0030-PNP | **0301495** | |
| KV BW08-SG08 3P-0100-PNP | **0301496** | |
| KV BW08-SG08 3P-0200-PNP | **0301497** | |
| KV BW12-SG12 3P-0030-PNP | **0301595** | |
| KV BW12-SG12 3P-0100-PNP | **0301596** | |
| KV BW12-SG12 3P-0200-PNP | **0301597** | |

ⓘ Two sensors (closer/NO) are required for each gripper, plus extension cables as an option.

ⓘ Please note the minimum permitted bending radii for the sensor cables, which are generally 35 mm.

You can find more detailed information and individual parts of the above-mentioned accessories in the “Accessories” catalog section.

## Cylindrical Reed Switches

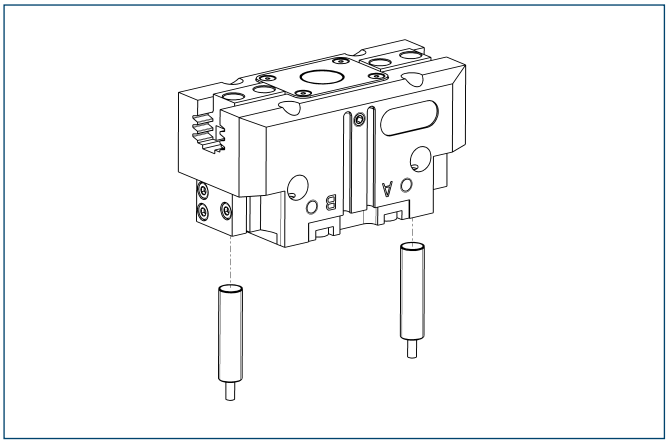

End position monitoring mounted with mounting kit

| Description | ID |
|---|---|
| Mounting kit for proximity switch | |
| AS-RMS 80<br>PGN/PZN-plus 100/125 | **0377726** |
| Reed Switches | |
| RMS 80-S-M8 | **0377721** |

ⓘ Two sensors (closer/NO) are required for each gripper, plus extension cables as an option.

ⓘ This mounting kit needs to be ordered optionally as an accessory.

ⓘ Please note the minimum permitted bending radii for the sensor cables, which are generally 35 mm.

## Analog position sensor

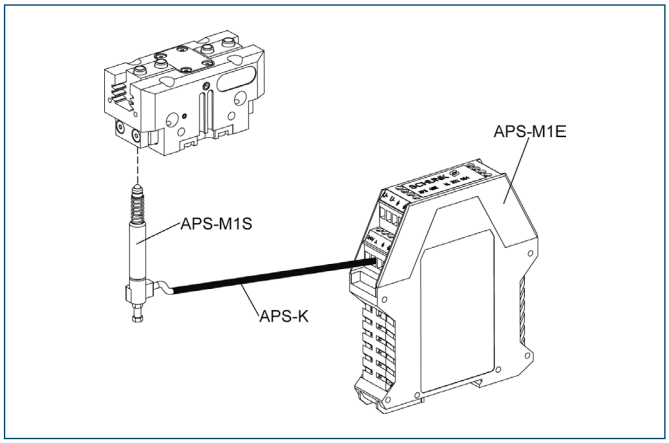


Analog multi position monitoring for any desired positions

| Description | ID |
|---|---|
| Mounting kit | |
| AS-APS-M1-100/1 | **0302079** |
| Connection cables | |
| APS-K0200 | **0302066** |
| APS-K0700 | **0302068** |
| Electronic Processor | |
| APS-M1E | **0302064** |
| Sensor | |
| APS-M1S | **0302062** |

ⓘ When using an APS system, for each gripper a mounting kit (AS-APS), an APS sensor (APS-M 1S, incl. 3 m cable) as well as an electronics (APS-M1e) are required.

ⓘ An extension cable (APS-K) can be connected between the sensor and the electronics as an option. The max. cable length between the sensor and the electronics is 10 m, between the electronics and their control unit (PLC) it is max. 1 m.

You can find more detailed information and individual parts of the above-mentioned accessories in the “Accessories” catalog section.

## Flexible Position Sensor

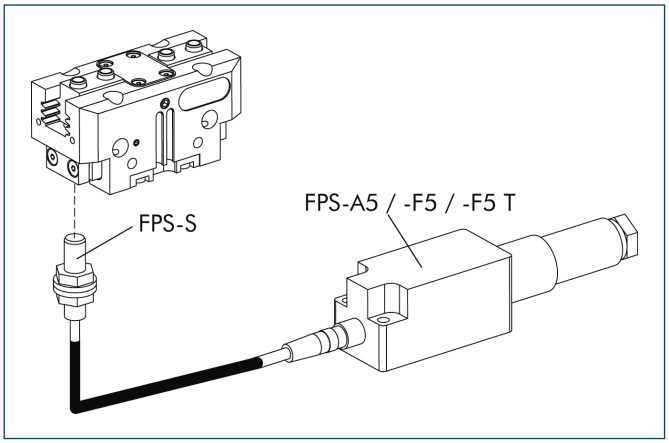


Flexible position monitoring of up to five positions

| Description | ID |
|---|---|
| Mounting kit for FPS | |
| AS-PGN/PZN-plus 100/1 | **0301634** |
| Electronic Processor | |
| FPS-F5 | **0301805** |
| FPS-F5 T | **0301807** |
| Sensor | |
| FPS-S M8 | **0301704** |

ⓘ When using a FPS system, a FPS sensor (FPS-S) and a control unit (FPS-F5 / F5 T or A5) are required for each gripper as well as a mounting kit (AS), if listed. Cable extensions (KV) are available as options in the “Accessories” catalog section.

You can find more detailed information and individual parts of the above-mentioned accessories in the “Accessories” catalog section.

# DPG-plus

**Pneumatic • 2-Finger Parallel Gripper • Sealed Gripper**

**Sizes**
40 ... 200

**Weight**
0.12 kg ... 9.5 kg

**Gripping force**
110 N ... 5940 N

**Stroke per finger**
2 mm ... 25 mm

**Workpiece weight**
0.55 kg ... 27.3 kg

## Application example




**Sealed and extremely robust rotary gripping combination for use in harsh environments such as foundries, grinding shops or forges**

1. **DPG-plus 2-Finger Parallel Gripper with top fingers equipped with carbide clamping inserts**
2. **Swivel Unit SRU-plus in IP 67 tight standard version**

## Sealed Grippers

Despite the high moment load of the base jaws, this sealed 2-finger parallel gripper conforms to the IP 67 requirements and does not permit any substances from the working environment to penetrate the interior of the unit.

## Field of application

The DPG-plus is ideally suitable for handling of rough or dirty workpieces. Its field of application extends from the loading and unloading of machines, such as in the case of sanitary blocks, grinding machines, lathes or milling machines, to handling tasks in painting plants, in powder-processing or underwater.

## Your advantages and benefits

**Robust interior multi-tooth guidance**
for the precise handling of all kinds of workpieces

**Lip seal at the outside round guidance**
for permanent, secure gripper sealing

**High maximum moments possible**
suitable for using long gripper fingers

**Sealed 2-finger parallel gripper**
complies to IP67 requirements despite a high moment load

**Drive concept oval piston**
for maximum gripping forces

**Mounting from two sides in three screw directions possible**
for universal and flexible gripper assembly

**Air supply via hose-free direct connection or screw connections**
for the flexible supply of compressed air in all automation systems

**Compact dimensions**
for minimal interfering contours in handling




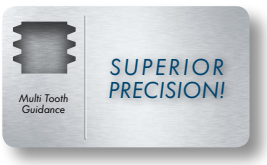


## General note to the series

**Principle of function**
Wedge-hook kinematics

**Housing material**
Aluminum alloy, hard-anodized

**Base jaw material**
Steel

**Actuation**
pneumatic, with filtered compressed air (10 microns): dry, lubricated or non-lubricated
Pressure medium: Required quality class of compressed air according to DIN ISO 8573-1: 6 4 4

**Warranty**
36 months (details, general terms and conditions and operation manuals can be downloaded under www.schunk.com)

**Scope of delivery**
Centering sleeves, O-rings for direct connection, assembly and operating manual with manufacturer's declaration

**Gripping force maintenance device**
with either mechanical gripping force maintenance or SDV-P pressure maintenance valve

## Sectional diagram

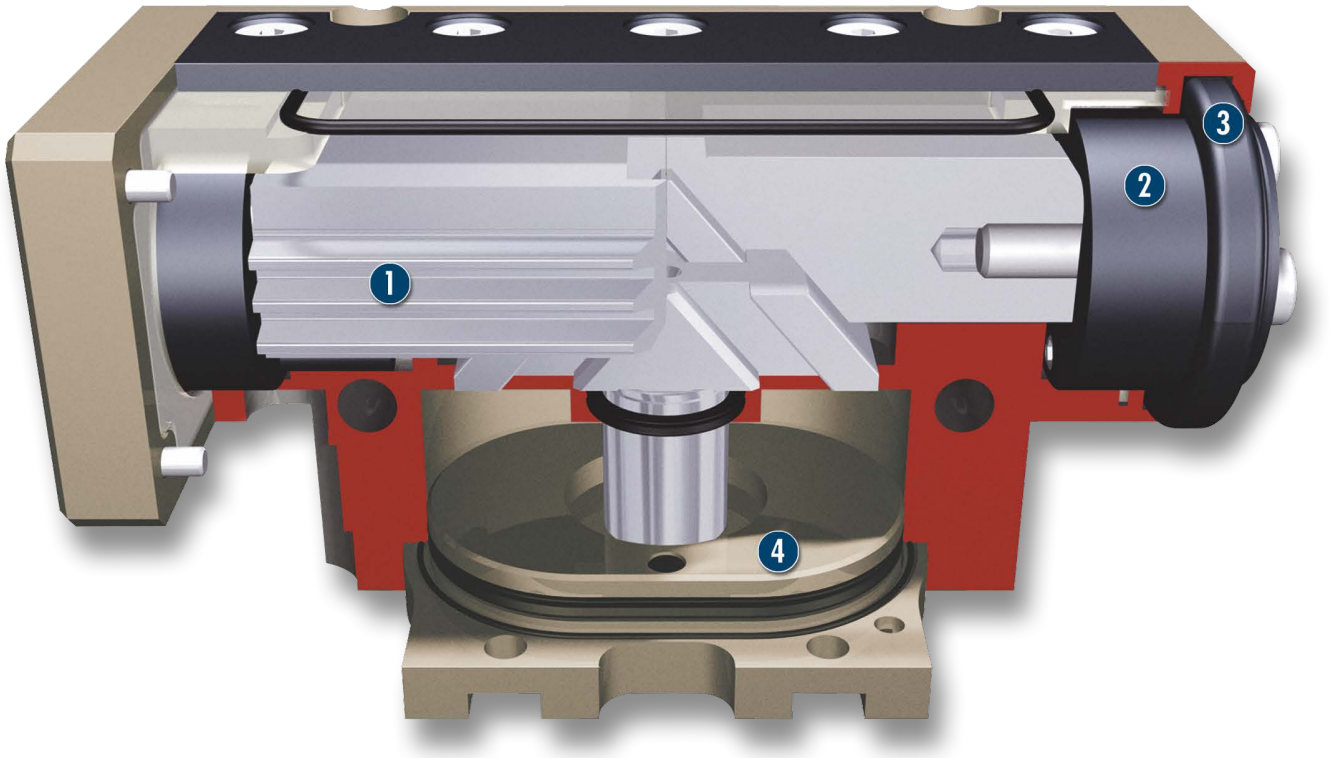


**1** **Inner base jaw with multi-tooth guidance**
for high moment loads

**2** **External round base jaw**
providing a sealable, round surface

**3** **Lip seal**
for permanent, secure gripper sealing

**4** **Oval piston with rod and wedge hook**
for power generation and transmission

## Functional description

The piston is moved up and down by compressed air.
The angled active surfaces of the wedge hook produce a synchronized, parallel jaw motion.

## Options and special information

Please note that an additional hose for deaeration or air purge is essential for the gripper, i.e. it requires three hoses in total. See the assembly and operating manual for detailed information.

**Force intensified version**
if higher gripping forces are required

## Accessories

Accessories from SCHUNK – the suitable supplement for maximum functionality, reliability and performance of all automation modules.

### Centering sleeves



### Fittings



### Sensor system



### Sensor cables



### Quick-change Jaw System



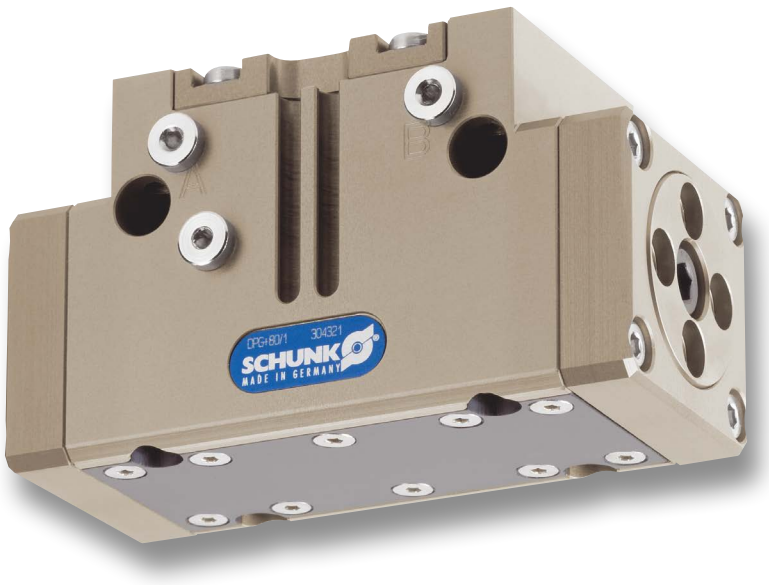


### Sensor Distributor

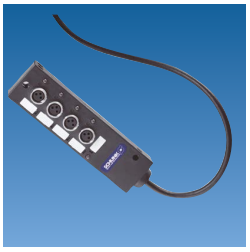

### Plastic inserts



### Pressure maintenance valve



### Gripper pads

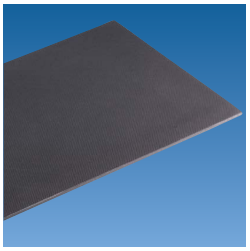

### Finger blanks



### Universal intermediate jaw



### Compensation unit



### Tolerance compensation unit



ⓘ For the exact size of the required accessories, availability of this size and the designation and ID, please refer to the additional views at the end of the size in question. You will find more detailed information on our accessory range in the “Accessories” catalog section.

## General note to the series

**Gripping force**
is the arithmetic total of the gripping force applied to each finger at distance P (see illustration) measured from the upper edge of the gripper.

**Finger length**
The finger length is measured from the upper edge of the gripper housing in the direction of the main axis.

**Repeat accuracy**
is defined as the spread of the limit position after 100 consecutive strokes.

**Workpiece weight**
The recommended workpiece weight is calculated for a force-type connection with a coefficient of friction of 0.1 and a safety factor of 2 against slippage of the workpiece on acceleration due to gravity g. Considerably heavier workpiece weights are permitted with form-fit gripping.

**Closing and opening times**
Closing and opening times are purely the times that the base jaws or fingers are in motion. Valve switching times, hose filling times or PLC reaction times are not included in the above times and must be taken into consideration when determining cycle times.

# DPG-plus 40

**Pneumatic • 2-Finger Parallel Gripper • Sealed Gripper**



## Gripping force, I.D. gripping

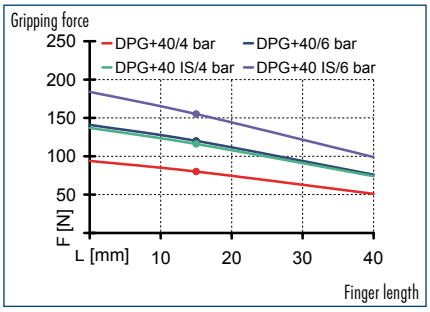


## Gripping force, O.D. gripping

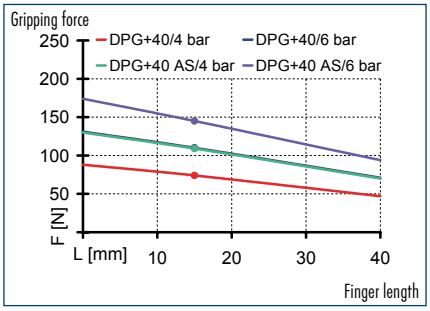


## Finger load

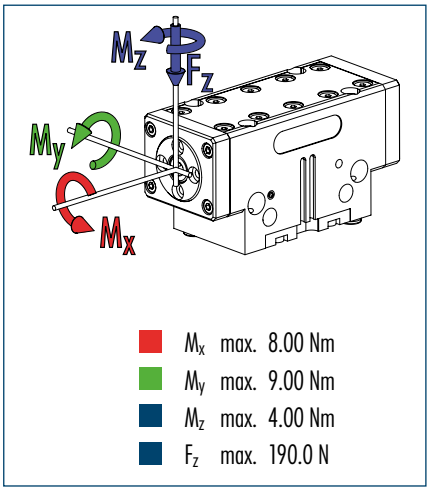


ⓘ The indicated moments and forces are static values, apply per base jaw and may occur simultaneously. $M_y$ may arise in addition to the moment generated by the gripping force itself. If the max. permitted finger weight is exceeded, it is imperative to throttle the air pressure so that the jaw movement occurs without any hitting or bouncing. Service life may be reduced.

## Technical data

| Description | | DPG-plus 40 | DPG-plus 40-AS | DPG-plus 40-IS |
|---|---|---|---|---|
| **ID** | | **0304291** | **0304293** | **0304295** |
| Stroke per finger | [mm] | 2.5 | 2.5 | 2.5 |
| Closing force | [N] | 110 | 145 | |
| Opening force | [N] | 120 | | 165 |
| Min. spring force | [N] | | 35 | 45 |
| Weight | [kg] | 0.12 | 0.14 | 0.14 |
| Recommended workpiece weight | [kg] | 0.55 | 0.55 | 0.55 |
| Air consumption per double stroke | [$cm^3$] | 2.5 | 5.5 | 5.5 |
| Min./max. operating pressure | [bar] | 2.5/8 | 4/6.5 | 4/6.5 |
| Nominal operating pressure | [bar] | 6 | 6 | 6 |
| Closing/opening time | [s] | 0.03/0.03 | 0.03/0.05 | 0.03/0.05 |
| Max. permitted finger length | [mm] | 40 | 40 | 40 |
| Max. permitted weight per finger | [kg] | 0.01 | 0.01 | 0.01 |
| IP class | | 67 | 67 | 67 |
| Min./max. ambient temperature | [°C] | -10/90 | -10/90 | -10/90 |
| Repeat accuracy | [mm] | 0.01 | 0.01 | 0.01 |
| Cleanroom class ISO-classification 14644-1 | | 5 | 5 | 5 |

ⓘ Please note that an additional hose for deaeration or air purge is essential for the gripper, i.e. it requires three hoses in total. See the assembly and operating manual for detailed information.

## Main view

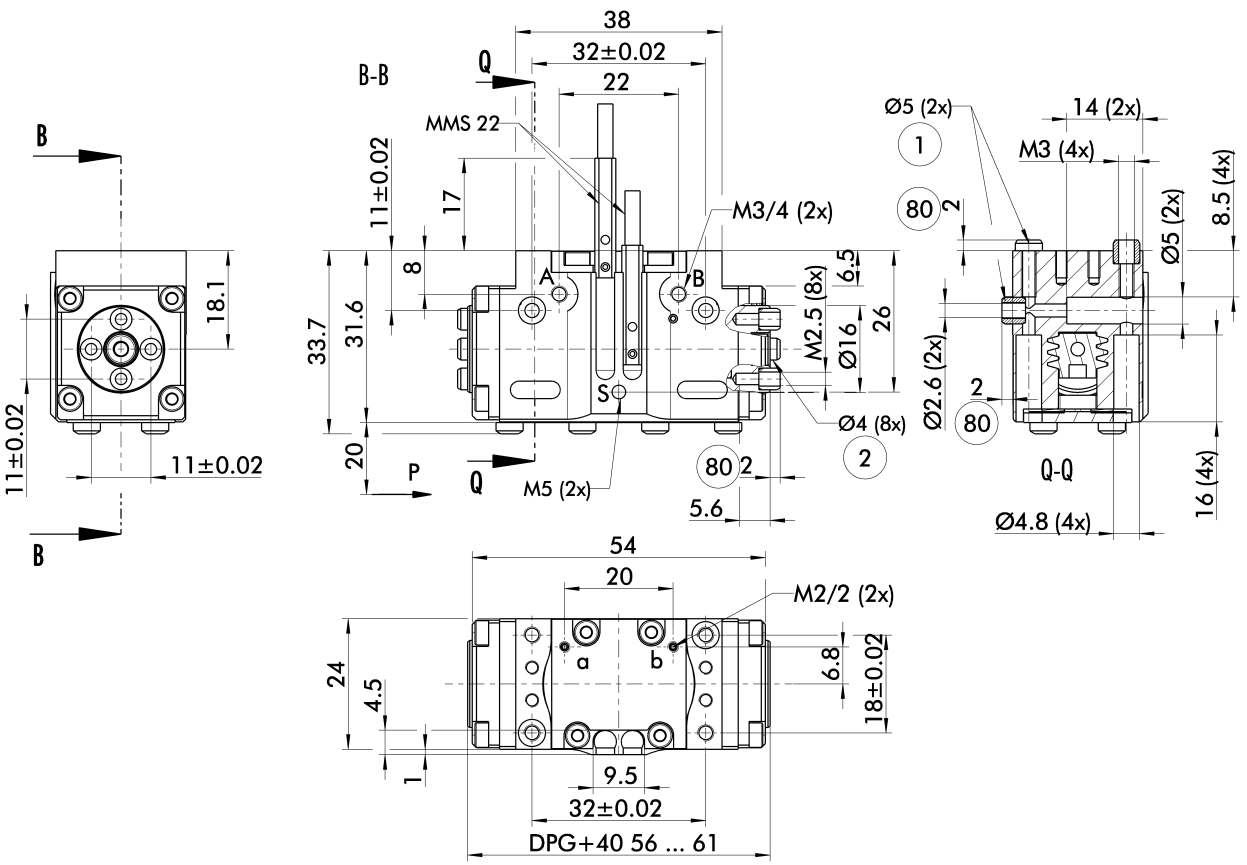


The drawing shows the gripper in the basic version with closed jaws, the dimensions do not include the options described below.

ⓘ The SDV-P pressure maintenance valve can be used as a gripping force maintenance device (see "Accessories" catalog section).

A, a Main/direct connection, gripper opening
B, b Main/direct connection, gripper closing
S Air purge connection
① Gripper connection
② Finger connection
80 Depth of the centering sleeve hole in the matching part

## Hose-free direct connection

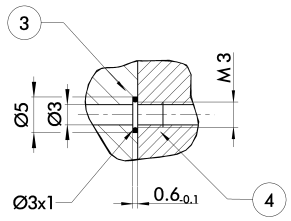


③ Adapter
④ Gripper

The direct connection is used for supplying compressed air without hoses. Instead, the pressure medium is fed through bore-holes in the mounting plate.

## AS/IS gripping force maintenance device

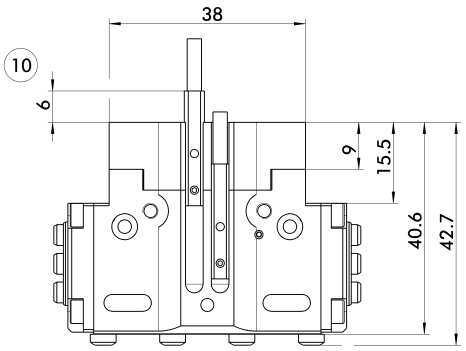


⑩ Projection applies only for AS version

The mechanical gripping force maintenance device ensures a minimum gripping force even in case of pressure drop. This acts as closing force in the AS version, and as opening force in the IS version. In addition, the gripping force maintenance device can also be used for increasing the gripping force or for single-acting gripping.

## Proposed jaw design

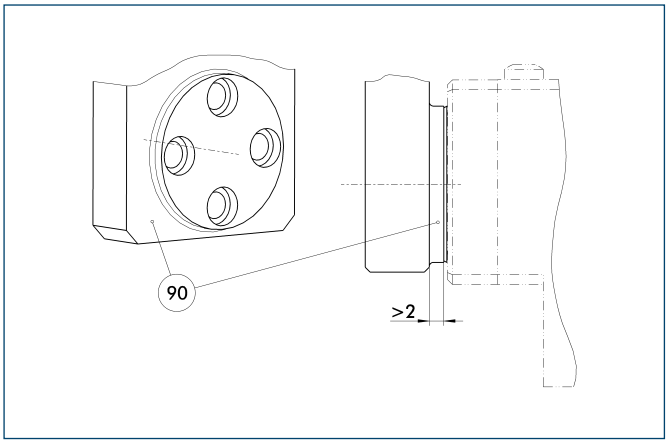


90 Step

In order to avoid impairment of the stroke due to contamination or chips, there should be a sufficient distance between the top jaws and the gripper.

## Maximum permitted finder projection

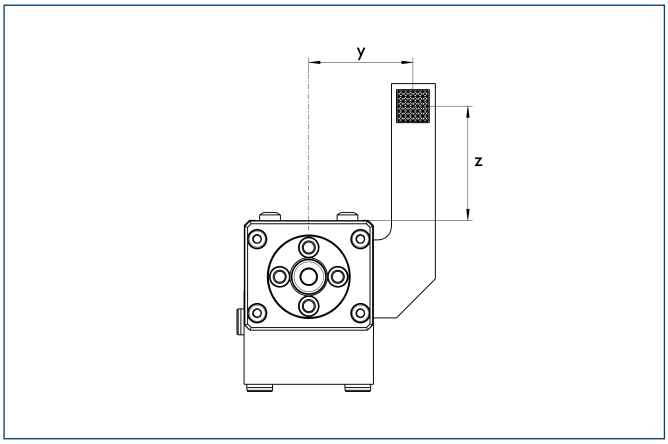


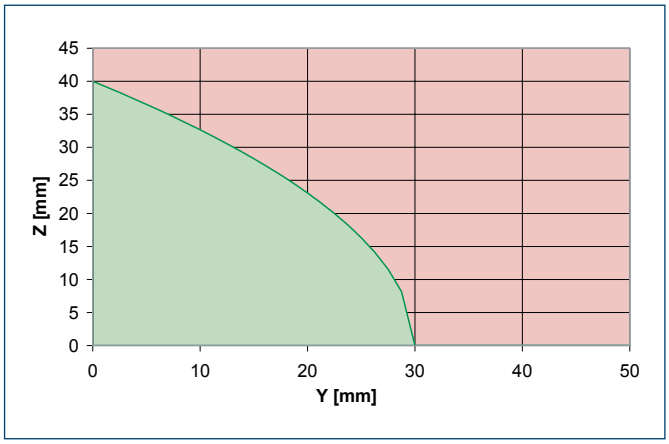


Permitted range
Inadmissible range

The curve applies to the basic version (stroke -1). For other versions, the curve will be parallel but offset in line with the max. permitted finger length.

## Compensation unit with spring reset

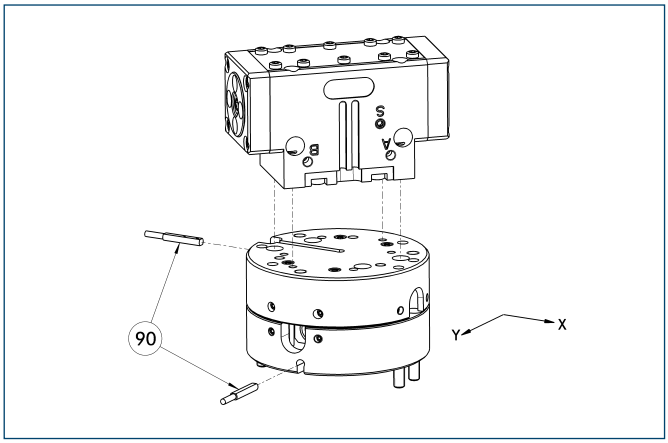


(90) Monitoring

Grippers can be directly mounted without using an adapter plate. For details see our catalog “Robot Accessories”.

| Description | ID | Compensation travel | Reset force |
|---|---|---|---|
| Compensation unit | | | |
| AGE-F-XY-031-1 | **0324900** | ±1.5 mm | 1 N |
| AGE-F-XY-031-2 | **0324901** | ±1.5 mm | 2.5 N |
| AGE-F-XY-031-3 | **0324902** | ±1.5 mm | 3.3 kN |

## Programmable magnetic switch

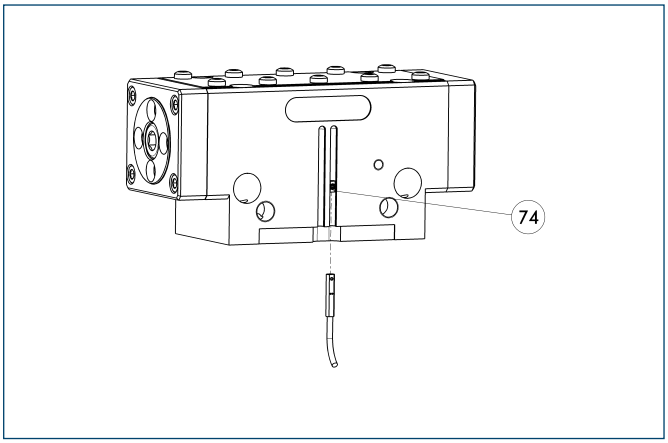


(74) Stop for MMS-P

Position monitoring with two programmable positions per sensor. The end position monitoring is mounted in the C-slot.

| Description | ID | Recommended product |
|---|---|---|
| Programmable magnetic switch | | |
| MMS-P 22-S-M8-PNP | **0301370** | • |
| MMSK-P 22-S-PNP | **0301371** | |
| Connection cables | | |
| KA BG08-L 4P-0500 | **0307767** | |
| KA BG08-L 4P-1000 | **0307768** | |
| KA BW08-L 4P-0500 | **0307765** | |
| KA BW08-L 4P-1000 | **0307766** | |
| Sensor Distributor | | |
| V2-M8-4P-2XM8-3P | **0301380** | |

ⓘ Please note the minimum permitted bending radii for the sensor cables, which are generally 35 mm.
ⓘ Per gripper one sensor (closer/NO) is required, optionally a cable extension.

You can find more detailed information and individual parts of the above-mentioned accessories in the “Accessories” catalog section.

## Electronic magnetic switches

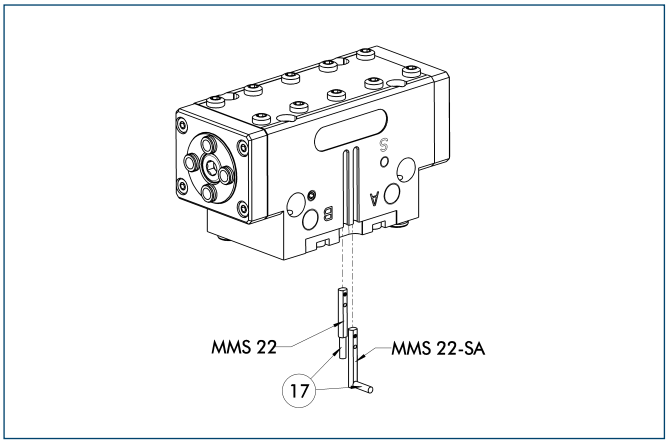


⑰ Cable outlet

End position monitoring for mounting in the C-slot

| Description | ID | Recommended product |
|---|---|---|
| Electronic magnetic switches | | |
| MMS 22-S-M5-PNP | **0301438** | |
| MMS 22-S-M5-NPN | **0301439** | |
| MMS 22-S-M8-PNP | **0301432** | • |
| MMS 22-S-M8-NPN | **0301433** | |
| MMSK 22-S-PNP | **0301434** | |
| MMSK 22-S-NPN | **0301435** | |
| Electronic magnetic switches with lateral cable outlet | | |
| MMS 22-S-M5-PNP-SA | **0301448** | |
| MMS 22-S-M5-NPN-SA | **0301449** | |
| MMS 22-S-M8-PNP-SA | **0301442** | • |
| MMS 22-S-M8-NPN-SA | **0301443** | |
| MMSK 22-S-PNP-SA | **0301444** | |
| MMSK 22-S-NPN-SA | **0301445** | |
| Connection cables | | |
| KA BG05-L 3P-0300 | **0301652** | |
| KA BG08-L 3P-0300-PNP | **0301622** | |
| KA BG08-L 3P-0500-PNP | **0301623** | |
| KA BW05-L 3P-0300 | **0301650** | |
| KA BW08-L 3P-0300-NPN | **0301602** | |
| KA BW08-L 3P-0300-PNP | **0301594** | |
| KA BW08-L 3P-0500-NPN | **9641116** | |
| KA BW08-L 3P-0500-PNP | **0301502** | |
| Cable extensions | | |
| KV BW08-SG08 3P-0030-PNP | **0301495** | |
| KV BW08-SG08 3P-0100-PNP | **0301496** | |
| KV BW08-SG08 3P-0200-PNP | **0301497** | |

ⓘ Two sensors (closer/NO) are required for each gripper, plus extension cables as an option.

ⓘ Please note the minimum permitted bending radii for the sensor cables, which are generally 35 mm.

You can find more detailed information and individual parts of the above-mentioned accessories in the “Accessories” catalog section.

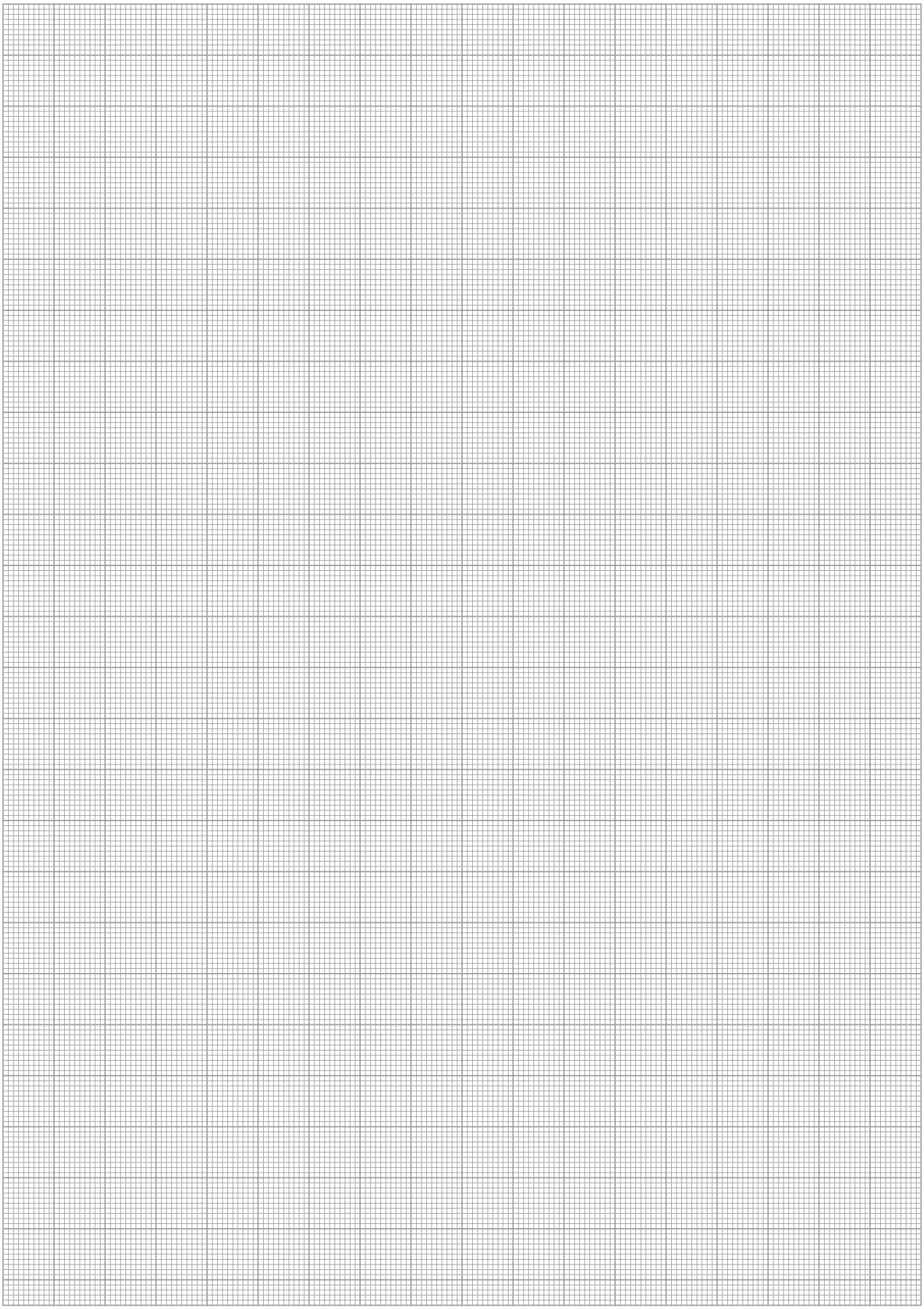

# DPG-plus 50

**Pneumatic • 2-Finger Parallel Gripper • Sealed Gripper**



## Gripping force, I.D. gripping

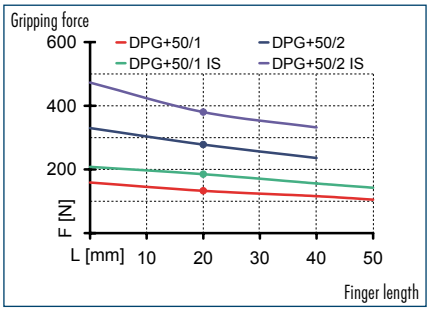


## Gripping force, O.D. gripping

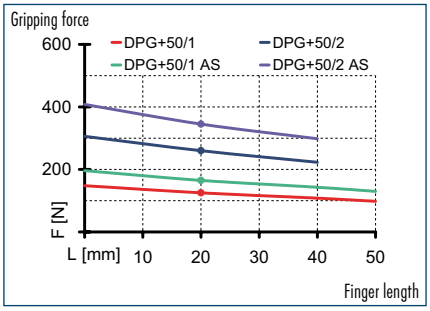


## Finger load

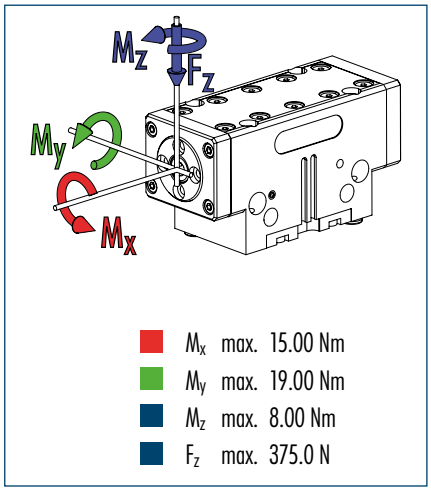


ⓘ The indicated moments and forces are static values, apply per base jaw and may occur simultaneously. $M_y$ may arise in addition to the moment generated by the gripping force itself. If the max. permitted finger weight is exceeded, it is imperative to throttle the air pressure so that the jaw movement occurs without any hitting or bouncing. Service life may be reduced.

## Technical data

| Description | | DPG-plus 50-1 | DPG-plus 50-2 | DPG-plus 50-1-AS | DPG-plus 50-2-AS | DPG-plus 50-1-IS | DPG-plus 50-2-IS |
|---|---|---|---|---|---|---|---|
| **ID** | | **0304301** | **0304302** | **0304303** | **0304304** | **0304305** | **0304306** |
| Stroke per finger | [mm] | 4 | 2 | 4 | 2 | 4 | 2 |
| Closing force | [N] | 125 | 260 | 165 | 345 | | |
| Opening force | [N] | 130 | 275 | | | 170 | 360 |
| Min. spring force | [N] | | | 40 | 85 | 40 | 85 |
| Weight | [kg] | 0.25 | 0.25 | 0.3 | 0.3 | 0.3 | 0.3 |
| Recommended workpiece weight | [kg] | 0.6 | 1.3 | 0.6 | 1.3 | 0.6 | 1.3 |
| Air consumption per double stroke | [cm³] | 5 | 5 | 12 | 12 | 12 | 12 |
| Min./max. operating pressure | [bar] | 2.5/8 | 2.5/8 | 4/6.5 | 4/6.5 | 4/6.5 | 4/6.5 |
| Nominal operating pressure | [bar] | 6 | 6 | 6 | 6 | 6 | 6 |
| Closing/opening time | [s] | 0.03/0.03 | 0.03/0.03 | 0.03/0.05 | 0.03/0.05 | 0.05/0.03 | 0.05/0.03 |
| Max. permitted finger length | [mm] | 50 | 40 | 50 | 40 | 50 | 40 |
| Max. permitted weight per finger | [kg] | 0.15 | 0.15 | 0.15 | 0.15 | 0.15 | 0.15 |
| IP class | | 67 | 67 | 67 | 67 | 67 | 67 |
| Min./max. ambient temperature | [°C] | -10/90 | -10/90 | -10/90 | -10/90 | -10/90 | -10/90 |
| Repeat accuracy | [mm] | 0.01 | 0.01 | 0.01 | 0.01 | 0.01 | 0.01 |
| Cleanroom class ISO-classification 14644-1 | | 5 | 5 | 5 | 5 | 5 | 5 |

### OPTIONS and their characteristics

| Force intensified version | | DPG-plus 50-1-KVZ | DPG-plus 50-2-KVZ | DPG-plus 50-1-AS-KVZ | DPG-plus 50-1-IS-KVZ |
|---|---|---|---|---|---|
| ID | | **0304307** | **0304308** | **0304309** | **0304300** |
| Closing force | [N] | 225 | 470 | 265 | |
| Opening force | [N] | 235 | 505 | | 275 |
| Weight | [kg] | 0.29 | 0.29 | 0.34 | 0.34 |
| Maximum pressure | [bar] | 6 | 6 | 6 | 6 |
| Max. permitted finger length | [mm] | 40 | 30 | 30 | 30 |

ⓘ Please note that an additional hose for deaeration or air purge is essential for the gripper, i.e. it requires three hoses in total. See the assembly and operating manual for detailed information.

## Main view

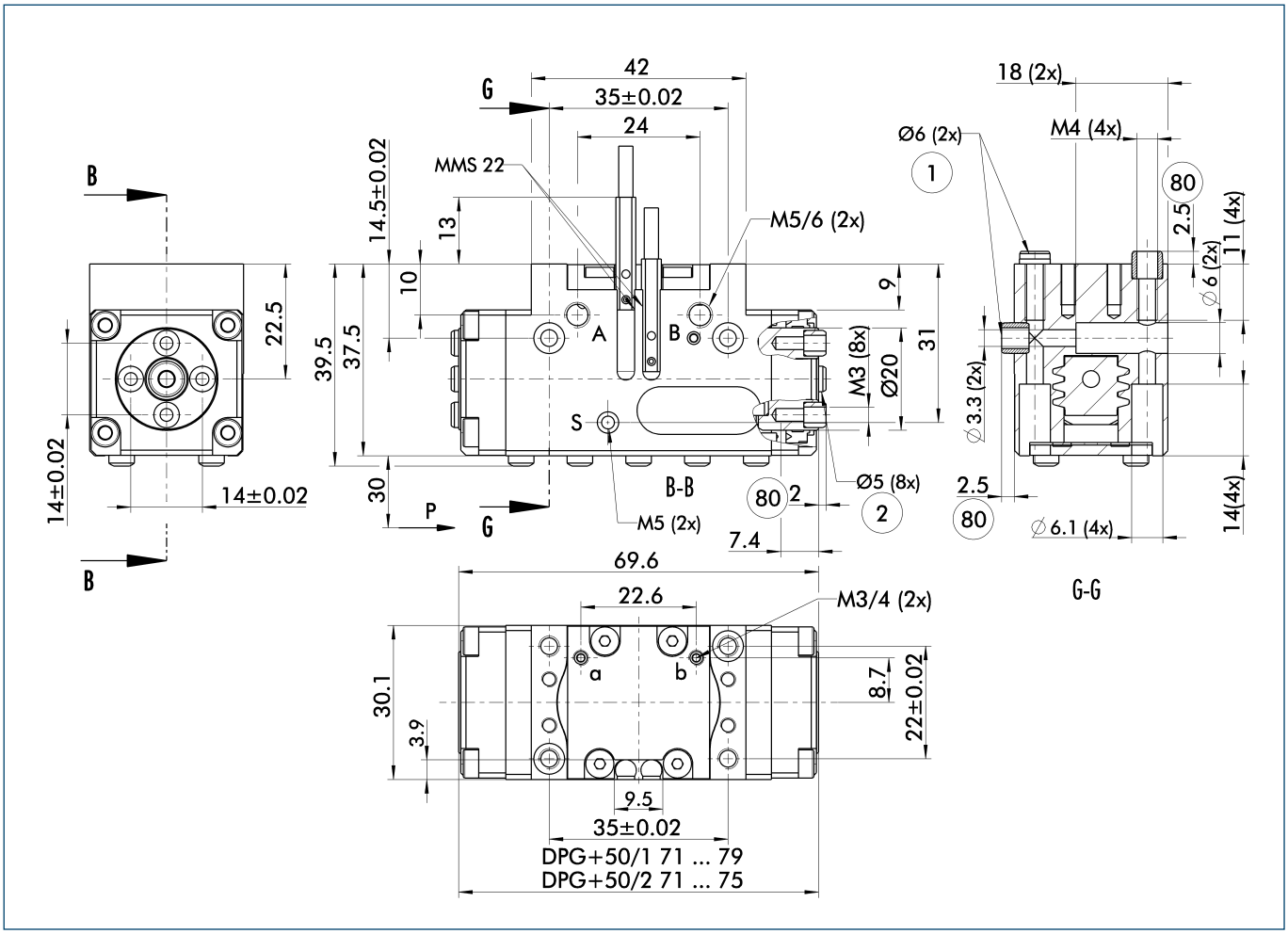


For finger connection, we recommend only to use two of the four centering bores for each finger. The drawing shows the gripper in the basic version with closed jaws, the dimensions do not include the options described below.

ⓘ The SDV-P pressure maintenance valve can be used as a gripping force maintenance device (see "Accessories" catalog section).

A, a Main/direct connection, gripper opening
B, b Main/direct connection, gripper closing
S Air purge connection
① Gripper connection
② Finger connection
80 Depth of the centering sleeve hole in the matching part

## Hose-free direct connection

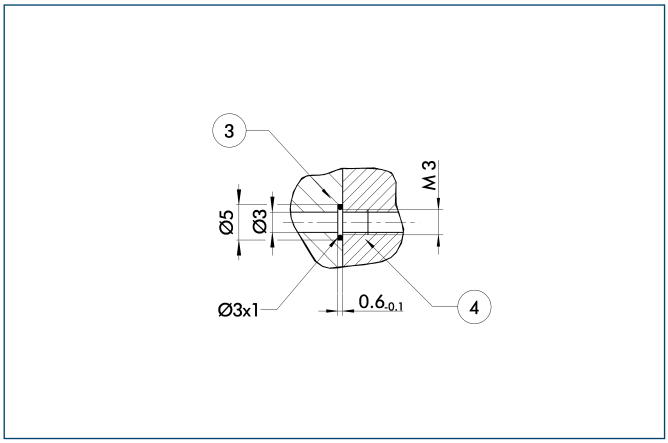


③ Adapter
④ Gripper

The direct connection is used for supplying compressed air without hoses. Instead, the pressure medium is fed through bore-holes in the mounting plate.

## AS/IS gripping force maintenance device

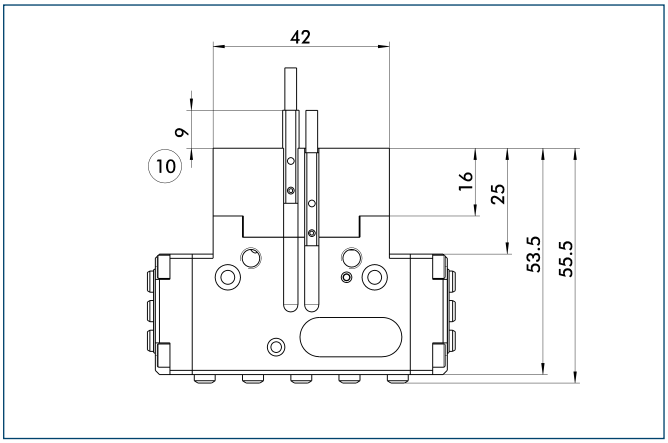


⑩ Projection applies only for AS version

The mechanical gripping force maintenance device ensures a minimum gripping force even in case of pressure drop. This acts as closing force in the AS version, and as opening force in the IS version. In addition, the gripping force maintenance device can also be used for increasing the gripping force or for single-acting gripping.

## Force intensified version

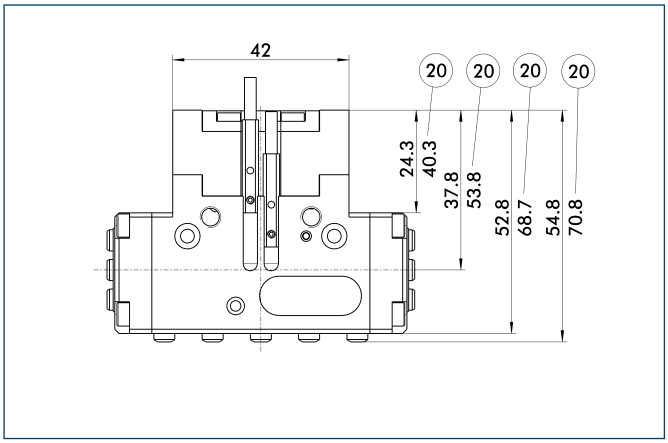


(20) For AS / IS version

The KVZ cylinder increases the gripping forces during opening and closing. A second, in series-connected piston also increases the force on the wedge hook. The full gripping force shown in the data table is sometimes only reached after a few hundred gripping cycles. Please consider that grippers which are equipped with a gripping force maintenance device (AS / IS) are higher.

## Proposed jaw design

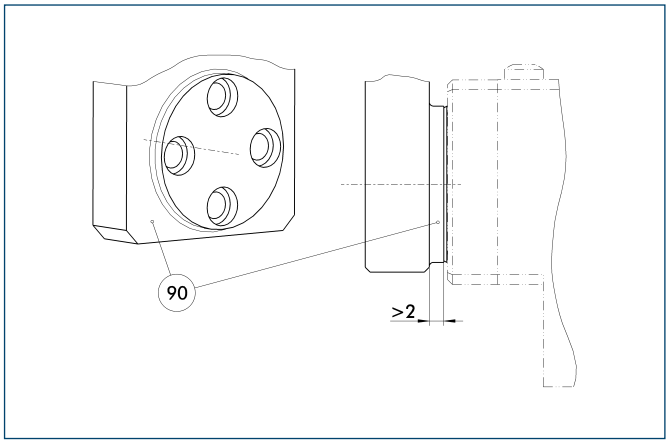


(90) Step

In order to avoid impairment of the stroke due to contamination or chips, there should be a sufficient distance between the top jaws and the gripper.

## Maximum permitted finger projection

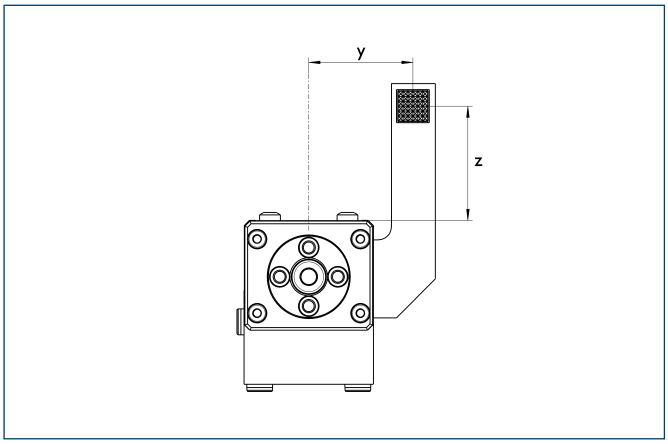


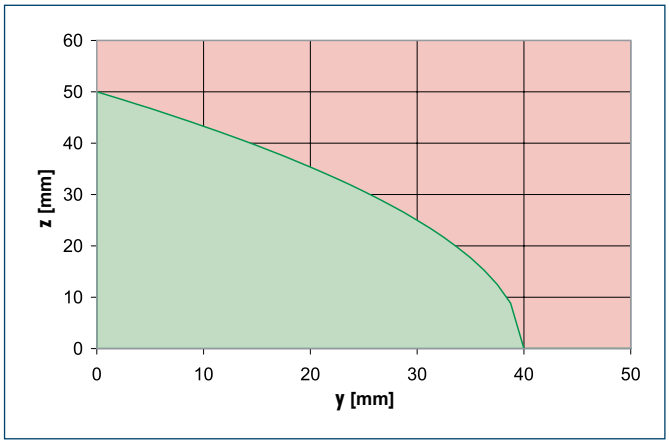


Permitted range
Inadmissible range

The curve applies to the basic version (stroke -1). For other versions, the curve will be parallel but offset in line with the max. permitted finger length.

## Intermediate Jaws

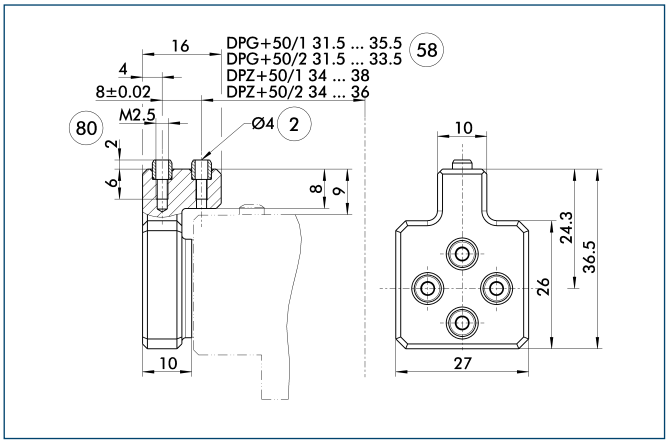


(2) Finger connection
(58) Distance from center of gripper
(80) Depth of the centering sleeve hole in the matching part

Optionally intermediate jaws can be used, enabling direct connection and alignment of top jaws and various standard accessories in Z-direction.

| Description | ID | Material | Scope of delivery |
|---|---|---|---|
| Intermediate Jaws | | | |
| ZBA-DPG-DPZ+50 | **0300191** | Aluminum | 1 |

## Tolerance compensation unit

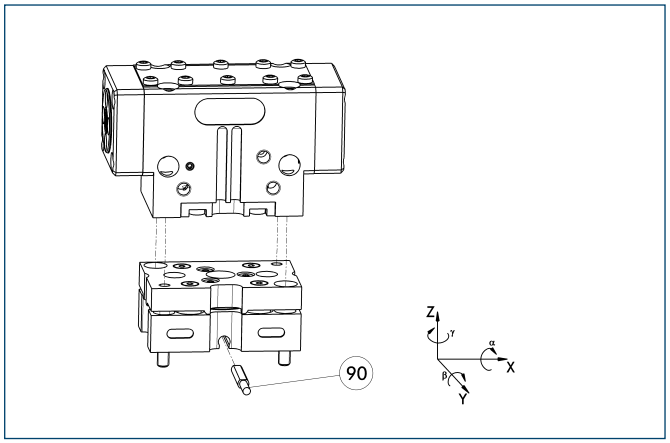


(90) Monitoring of locking

Grippers can be directly mounted without an adapter plate. Tolerance compensation unit and gripper have an identical screw connection diagram. Therefore the tolerance compensation units can be assembled later. Please consider the additional assembly height of the tolerance compensation unit. For details see catalog “Robot Accessories”.

| Description | ID | Locking | Deflection |
|---|---|---|---|
| Compensation unit | | | |
| TCU-050-3-OV-P | **0324757** | No | ±0°/±1°/±0° |

## Compensation unit with spring reset

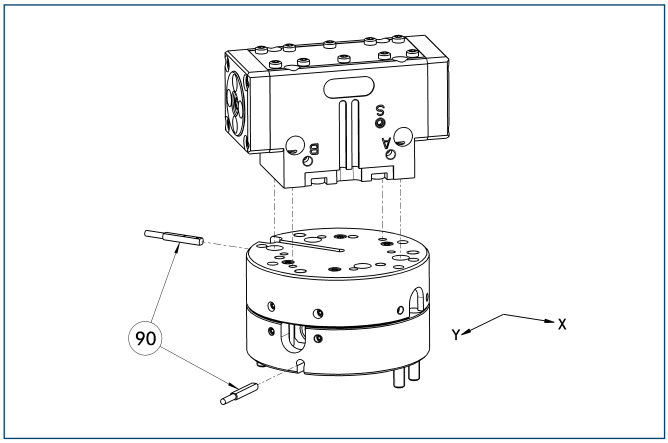


(90) Monitoring

Grippers can be directly mounted without using an adapter plate. For details see our catalog “Robot Accessories”.

| Description | ID | Compensation travel | Reset force |
|---|---|---|---|
| Compensation unit | | | |
| AGE-F-XY-040-1 | **0324920** | ±2 mm | 1 N |
| AGE-F-XY-040-2 | **0324921** | ±2 mm | 2.5 N |
| AGE-F-XY-040-3 | **0324922** | ±2 mm | 3.3 N |

## Programmable magnetic switch

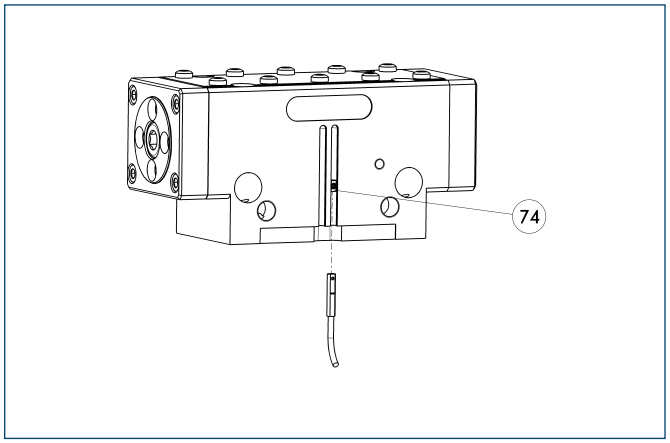


(74) Stop for MMS-P

Position monitoring with two programmable positions per sensor. The end position monitoring is mounted in the C-slot.

| Description | ID | Recommended product |
|---|---|---|
| Programmable magnetic switch | | |
| MMS-P 22-S-M8-PNP | **0301370** | • |
| MMSK-P 22-S-PNP | **0301371** | |
| Connection cables | | |
| KA BG08-L 4P-0500 | **0307767** | |
| KA BG08-L 4P-1000 | **0307768** | |
| KA BW08-L 4P-0500 | **0307765** | |
| KA BW08-L 4P-1000 | **0307766** | |
| Sensor Distributor | | |
| V2-M8-4P-2XM8-3P | **0301380** | |

ⓘ Please note the minimum permitted bending radii for the sensor cables, which are generally 35 mm.
ⓘ Per gripper one sensor (closer/NO) is required, optionally a cable extension.

You can find more detailed information and individual parts of the above-mentioned accessories in the “Accessories” catalog section.

## Electronic magnetic switches

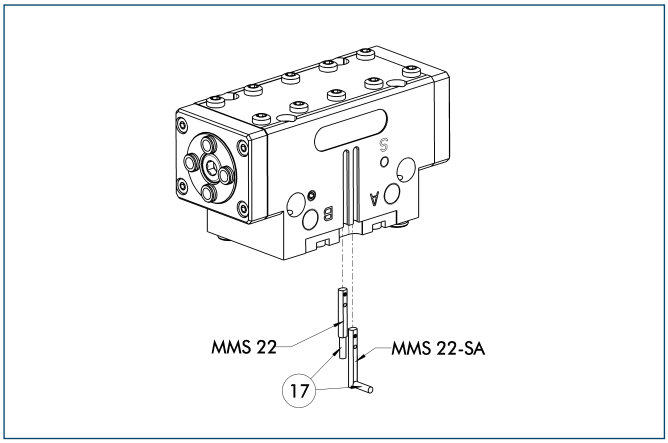


⑰ Cable outlet

End position monitoring for mounting in the C-slot

| Description | ID | Recommended product |
|---|---|---|
| Electronic magnetic switches | | |
| MMS 22-S-M5-PNP | **0301438** | |
| MMS 22-S-M5-NPN | **0301439** | |
| MMS 22-S-M8-PNP | **0301432** | • |
| MMS 22-S-M8-NPN | **0301433** | |
| MMSK 22-S-PNP | **0301434** | |
| MMSK 22-S-NPN | **0301435** | |
| Electronic magnetic switches with lateral cable outlet | | |
| MMS 22-S-M5-PNP-SA | **0301448** | |
| MMS 22-S-M5-NPN-SA | **0301449** | |
| MMS 22-S-M8-PNP-SA | **0301442** | • |
| MMS 22-S-M8-NPN-SA | **0301443** | |
| MMSK 22-S-PNP-SA | **0301444** | |
| MMSK 22-S-NPN-SA | **0301445** | |
| Connection cables | | |
| KA BG05-L 3P-0300 | **0301652** | |
| KA BG08-L 3P-0300-PNP | **0301622** | |
| KA BG08-L 3P-0500-PNP | **0301623** | |
| KA BW05-L 3P-0300 | **0301650** | |
| KA BW08-L 3P-0300-NPN | **0301602** | |
| KA BW08-L 3P-0300-PNP | **0301594** | |
| KA BW08-L 3P-0500-NPN | **9641116** | |
| KA BW08-L 3P-0500-PNP | **0301502** | |
| Cable extensions | | |
| KV BW08-SG08 3P-0030-PNP | **0301495** | |
| KV BW08-SG08 3P-0100-PNP | **0301496** | |
| KV BW08-SG08 3P-0200-PNP | **0301497** | |

ⓘ Two sensors (closer/NO) are required for each gripper, plus extension cables as an option.

ⓘ Please note the minimum permitted bending radii for the sensor cables, which are generally 35 mm.

You can find more detailed information and individual parts of the above-mentioned accessories in the “Accessories” catalog section.

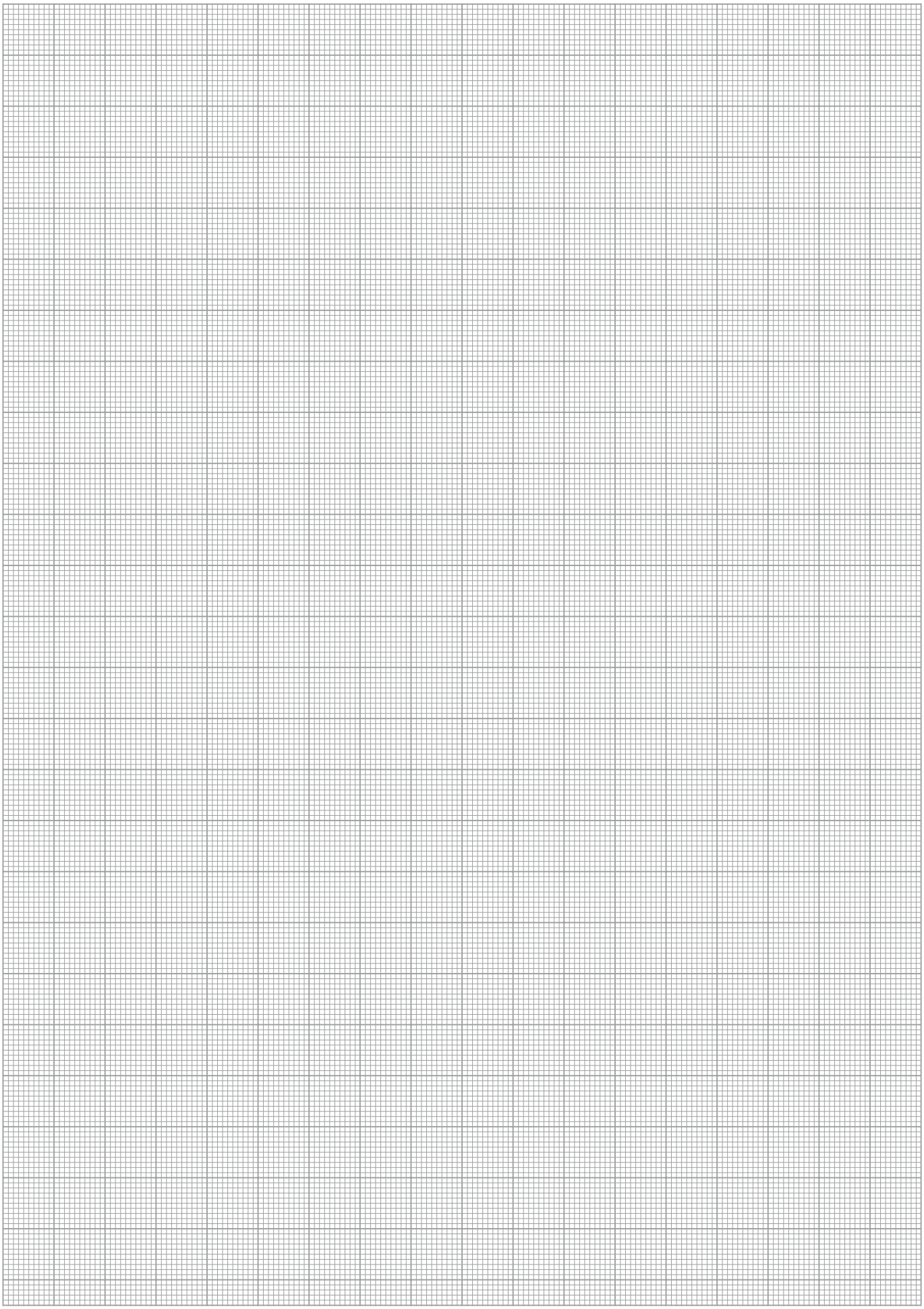

# DPG-plus 64

**Pneumatic • 2-Finger Parallel Gripper • Sealed Gripper**



## Gripping force, I.D. gripping

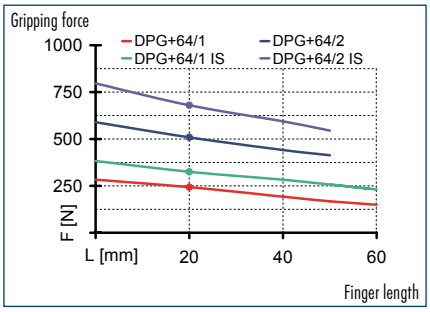


## Gripping force, O.D. gripping

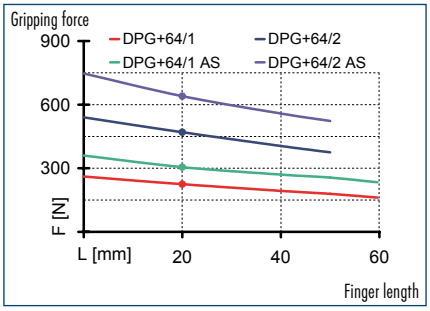


## Finger load

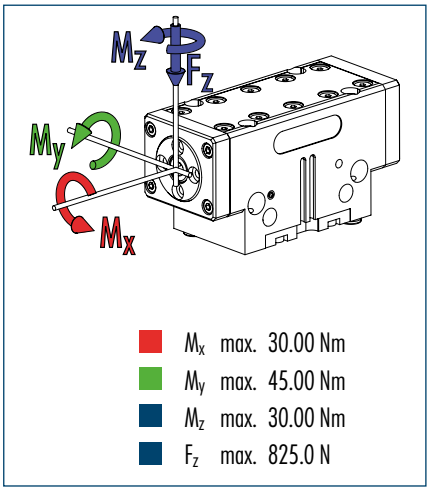


ⓘ The indicated moments and forces are static values, apply per base jaw and may occur simultaneously. $M_y$ may arise in addition to the moment generated by the gripping force itself. If the max. permitted finger weight is exceeded, it is imperative to throttle the air pressure so that the jaw movement occurs without any hitting or bouncing. Service life may be reduced.

## Technical data

| Description | | DPG-plus 64-1 | DPG-plus 64-2 | DPG-plus 64-1-AS | DPG-plus 64-2-AS | DPG-plus 64-1-IS | DPG-plus 64-2-IS |
|---|---|---|---|---|---|---|---|
| **ID** | | **0304311** | **0304312** | **0304313** | **0304314** | **0304315** | **0304316** |
| Stroke per finger | [mm] | 6 | 3 | 6 | 3 | 6 | 3 |
| Closing force | [N] | 225 | 470 | 305 | 640 | | |
| Opening force | [N] | 240 | 500 | | | 320 | 670 |
| Min. spring force | [N] | | | 80 | 170 | 80 | 170 |
| Weight | [kg] | 0.39 | 0.39 | 0.46 | 0.46 | 0.46 | 0.46 |
| Recommended workpiece weight | [kg] | 1.1 | 2.3 | 1.1 | 2.3 | 1.1 | 2.3 |
| Air consumption per double stroke | [cm³] | 9 | 9 | 24 | 24 | 24 | 24 |
| Min./max. operating pressure | [bar] | 2.5/8 | 2.5/8 | 4/6.5 | 4/6.5 | 4/6.5 | 4/6.5 |
| Nominal operating pressure | [bar] | 6 | 6 | 6 | 6 | 6 | 6 |
| Closing/opening time | [s] | 0.04/0.04 | 0.04/0.04 | 0.03/0.06 | 0.03/0.06 | 0.06/0.03 | 0.06/0.03 |
| Max. permitted finger length | [mm] | 64 | 50 | 64 | 50 | 64 | 50 |
| Max. permitted weight per finger | [kg] | 0.3 | 0.3 | 0.3 | 0.3 | 0.3 | 0.3 |
| IP class | | 67 | 67 | 67 | 67 | 67 | 67 |
| Min./max. ambient temperature | [°C] | -10/90 | -10/90 | -10/90 | -10/90 | -10/90 | -10/90 |
| Repeat accuracy | [mm] | 0.01 | 0.01 | 0.01 | 0.01 | 0.01 | 0.01 |
| Cleanroom class ISO-classification 14644-1 | | 5 | 5 | 5 | 5 | 5 | 5 |

### OPTIONS and their characteristics

| Force intensified version | | DPG-plus 64-1-KVZ | DPG-plus 64-2-KVZ | DPG-plus 64-1-AS-KVZ | DPG-plus 64-1-IS-KVZ |
|---|---|---|---|---|---|
| ID | | **0304317** | **0304318** | **0304319** | **0304310** |
| Closing force | [N] | 405 | 850 | 485 | |
| Opening force | [N] | 440 | 915 | | 520 |
| Weight | [kg] | 0.47 | 0.47 | 0.55 | 0.55 |
| Maximum pressure | [bar] | 6 | 6 | 6 | 6 |
| Max. permitted finger length | [mm] | 50 | 40 | 40 | 40 |

ⓘ Please note that an additional hose for deaeration or air purge is essential for the gripper, i.e. it requires three hoses in total. See the assembly and operating manual for detailed information.

## Main view

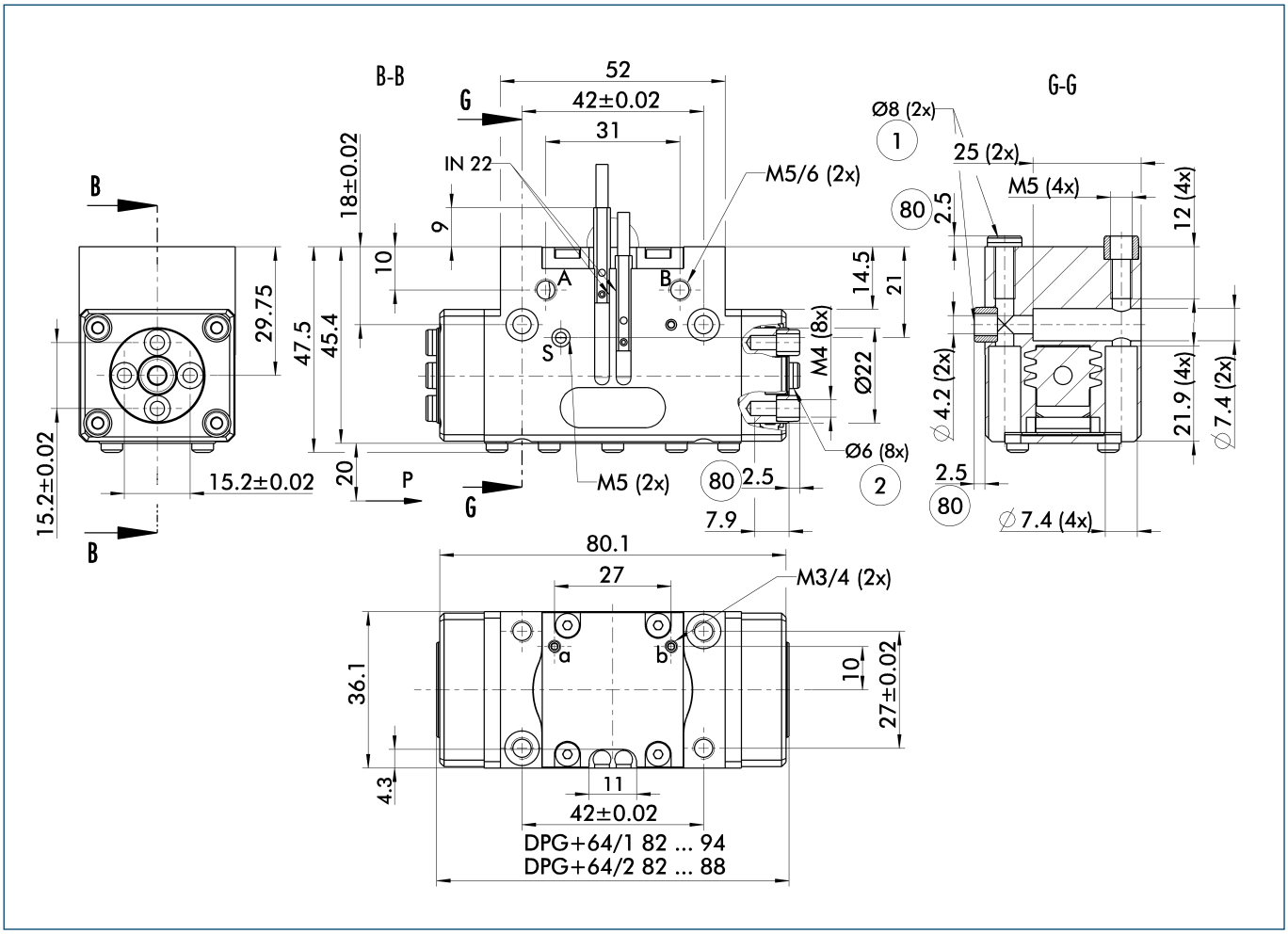


For finger connection, we recommend only to use two of the four centering bores for each finger. The drawing shows the gripper in the basic version with closed jaws, the dimensions do not include the options described below.

ⓘ The SDV-P pressure maintenance valve can be used as a gripping force maintenance device (see "Accessories" catalog section).

A, a Main/direct connection, gripper opening
B, b Main/direct connection, gripper closing
S Air purge connection
① Gripper connection
② Finger connection
80 Depth of the centering sleeve hole in the matching part

## Hose-free direct connection

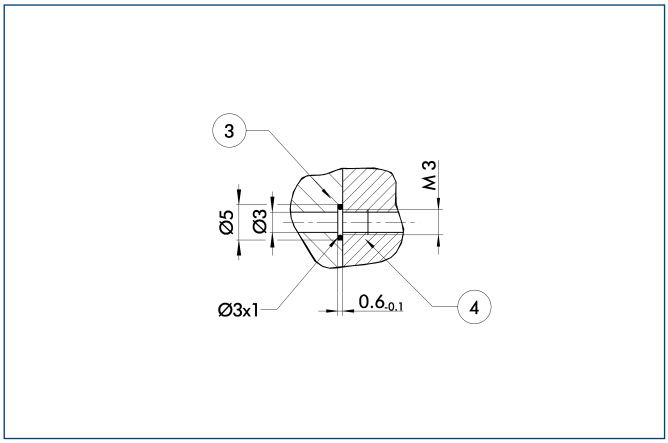


③ Adapter
④ Gripper

The direct connection is used for supplying compressed air without hoses. Instead, the pressure medium is fed through bore-holes in the mounting plate.

## AS/IS gripping force maintenance device

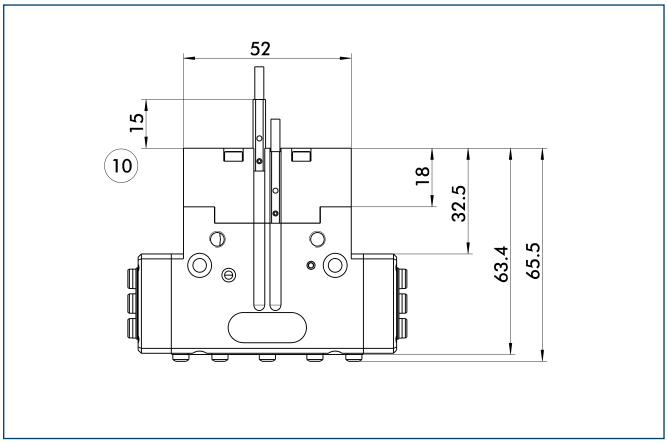


⑩ Projection applies only for AS version

The mechanical gripping force maintenance device ensures a minimum gripping force even in case of pressure drop. This acts as closing force in the AS version, and as opening force in the IS version. In addition, the gripping force maintenance device can also be used for increasing the gripping force or for single-acting gripping.

## Force intensified version

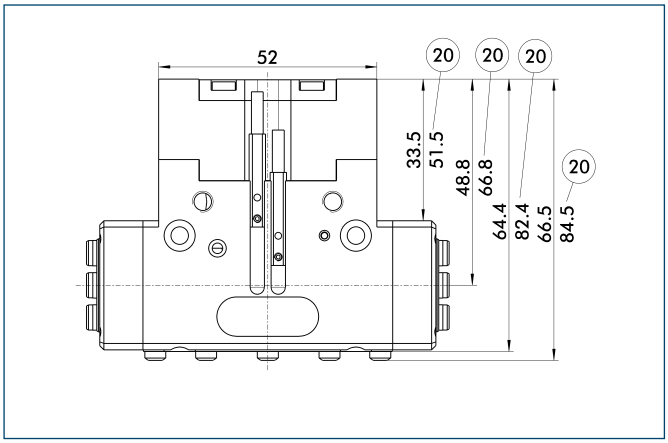


(20) For AS / IS version

The KVZ cylinder increases the gripping forces during opening and closing. A second, in series-connected piston also increases the force on the wedge hook. The full gripping force shown in the data table is sometimes only reached after a few hundred gripping cycles. Please consider that grippers which are equipped with a gripping force maintenance device (AS / IS) are higher.

## Proposed jaw design

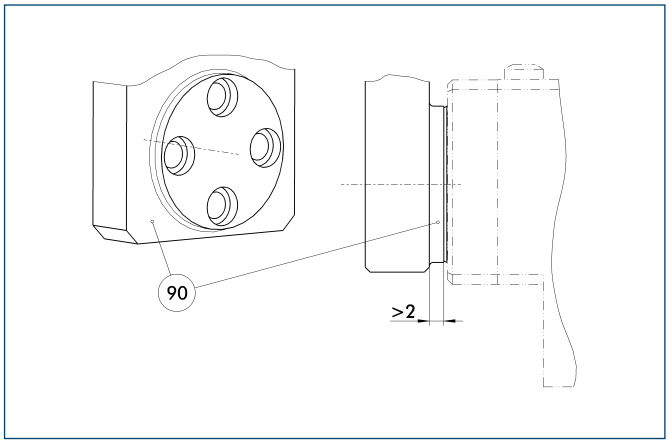


(90) Step

In order to avoid impairment of the stroke due to contamination or chips, there should be a sufficient distance between the top jaws and the gripper.

## Maximum permitted finger projection

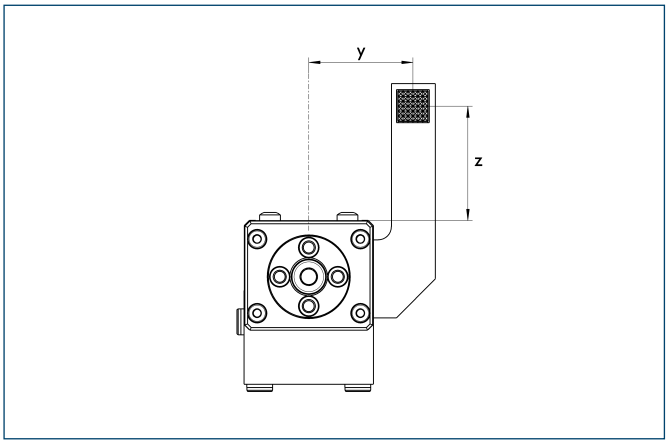


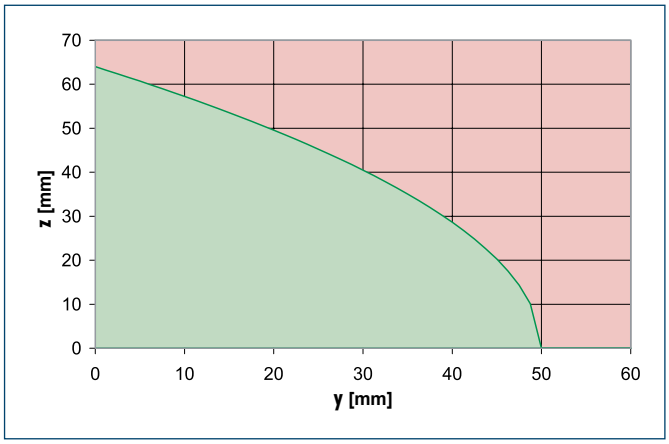


Permitted range
Inadmissible range

The curve applies to the basic version (stroke -1). For other versions, the curve will be parallel but offset in line with the max. permitted finger length.

## Intermediate Jaws

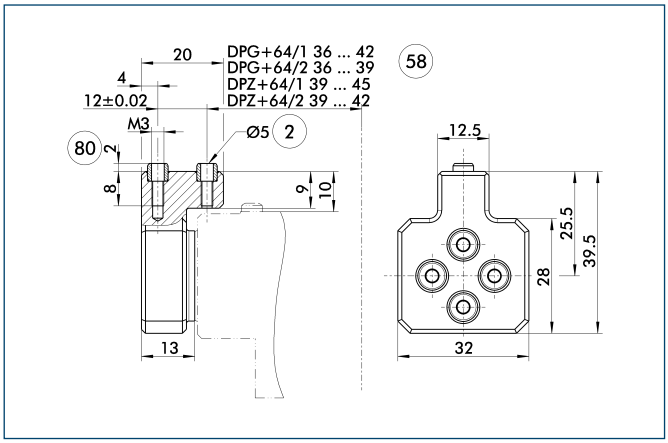


(2) Finger connection
(58) Distance from center of gripper
(80) Depth of the centering sleeve hole in the matching part

Optionally intermediate jaws can be used, enabling direct connection and alignment of top jaws and various standard accessories in Z-direction.

| Description | ID | Material | Scope of delivery |
|---|---|---|---|
| Intermediate Jaws | | | |
| ZBA-DPG-DPZ+64 | **0300192** | Aluminum | 1 |

## Tolerance compensation unit

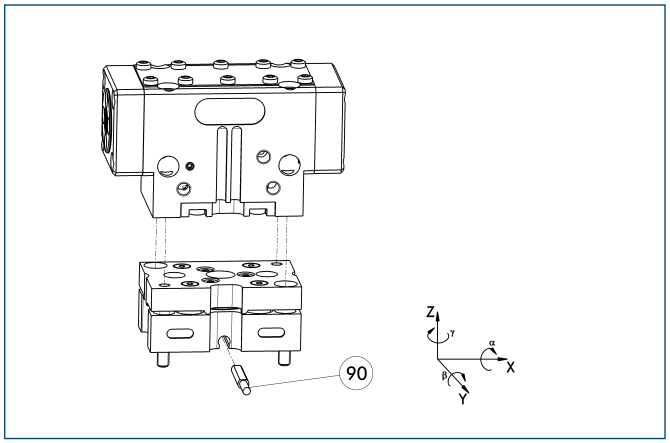


(90) Monitoring of locking

Grippers can be directly mounted without an adapter plate. Tolerance compensation unit and gripper have an identical screw connection diagram. Therefore the tolerance compensation units can be assembled later. Please consider the additional assembly height of the tolerance compensation unit. For details see catalog “Robot Accessories”.

| Description | ID | Locking | Deflection |
|---|---|---|---|
| Compensation unit | | | |
| TCU-064-3-MV-P | **0324774** | Yes | ±3°/±1°/±2° |
| TCU-064-3-OV-P | **0324775** | No | ±3°/±1°/±2° |

## Compensation unit with spring reset

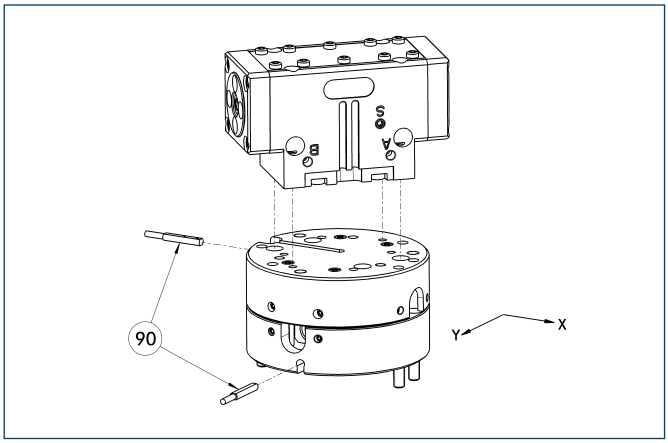


(90) Monitoring

Grippers can be directly mounted without using an adapter plate. For details see our catalog “Robot Accessories”.

| Description | ID | Compensation travel | Reset force |
|---|---|---|---|
| Compensation unit | | | |
| AGE-F-XY-063-1 | **0324940** | ±4 mm | 9 N |
| AGE-F-XY-063-2 | **0324941** | ±4 mm | 10 N |
| AGE-F-XY-063-3 | **0324942** | ±4 mm | 19.3 N |

## Programmable magnetic switch

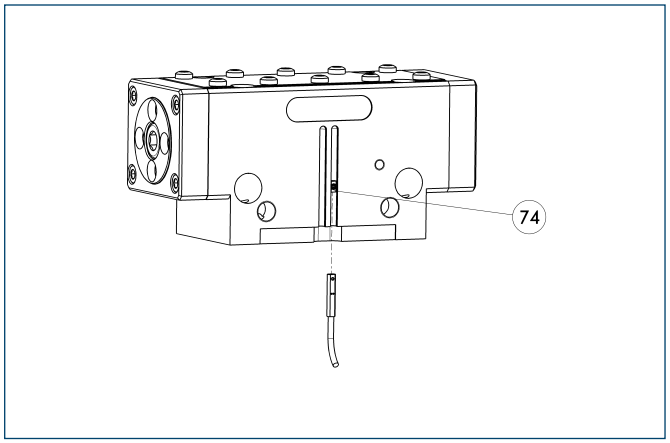


(74) Stop for MMS-P

Position monitoring with two programmable positions per sensor. The end position monitoring is mounted in the C-slot.

| Description | ID | Recommended product |
|---|---|---|
| Programmable magnetic switch | | |
| MMS-P 22-S-M8-PNP | **0301370** | • |
| MMSK-P 22-S-PNP | **0301371** | |
| Connection cables | | |
| KA BG08-L 4P-0500 | **0307767** | |
| KA BG08-L 4P-1000 | **0307768** | |
| KA BW08-L 4P-0500 | **0307765** | |
| KA BW08-L 4P-1000 | **0307766** | |
| Sensor Distributor | | |
| V2-M8-4P-2XM8-3P | **0301380** | |

ⓘ Please note the minimum permitted bending radii for the sensor cables, which are generally 35 mm.
ⓘ Per gripper one sensor (closer/NO) is required, optionally a cable extension.

You can find more detailed information and individual parts of the above-mentioned accessories in the “Accessories” catalog section.

## Electronic magnetic switches

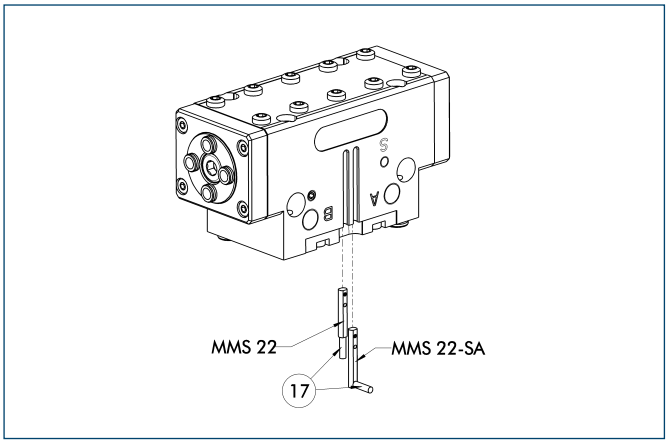


⑰ Cable outlet

End position monitoring for mounting in the C-slot

| Description | ID | Recommended product |
|---|---|---|
| Electronic magnetic switches | | |
| MMS 22-S-M5-PNP | **0301438** | |
| MMS 22-S-M5-NPN | **0301439** | |
| MMS 22-S-M8-PNP | **0301432** | • |
| MMS 22-S-M8-NPN | **0301433** | |
| MMSK 22-S-PNP | **0301434** | |
| MMSK 22-S-NPN | **0301435** | |
| Electronic magnetic switches with lateral cable outlet | | |
| MMS 22-S-M5-PNP-SA | **0301448** | |
| MMS 22-S-M5-NPN-SA | **0301449** | |
| MMS 22-S-M8-PNP-SA | **0301442** | • |
| MMS 22-S-M8-NPN-SA | **0301443** | |
| MMSK 22-S-PNP-SA | **0301444** | |
| MMSK 22-S-NPN-SA | **0301445** | |
| Connection cables | | |
| KA BG05-L 3P-0300 | **0301652** | |
| KA BG08-L 3P-0300-PNP | **0301622** | |
| KA BG08-L 3P-0500-PNP | **0301623** | |
| KA BW05-L 3P-0300 | **0301650** | |
| KA BW08-L 3P-0300-NPN | **0301602** | |
| KA BW08-L 3P-0300-PNP | **0301594** | |
| KA BW08-L 3P-0500-NPN | **9641116** | |
| KA BW08-L 3P-0500-PNP | **0301502** | |
| Cable extensions | | |
| KV BW08-SG08 3P-0030-PNP | **0301495** | |
| KV BW08-SG08 3P-0100-PNP | **0301496** | |
| KV BW08-SG08 3P-0200-PNP | **0301497** | |

ⓘ Two sensors (closer/NO) are required for each gripper, plus extension cables as an option.

ⓘ Please note the minimum permitted bending radii for the sensor cables, which are generally 35 mm.

You can find more detailed information and individual parts of the above-mentioned accessories in the “Accessories” catalog section.

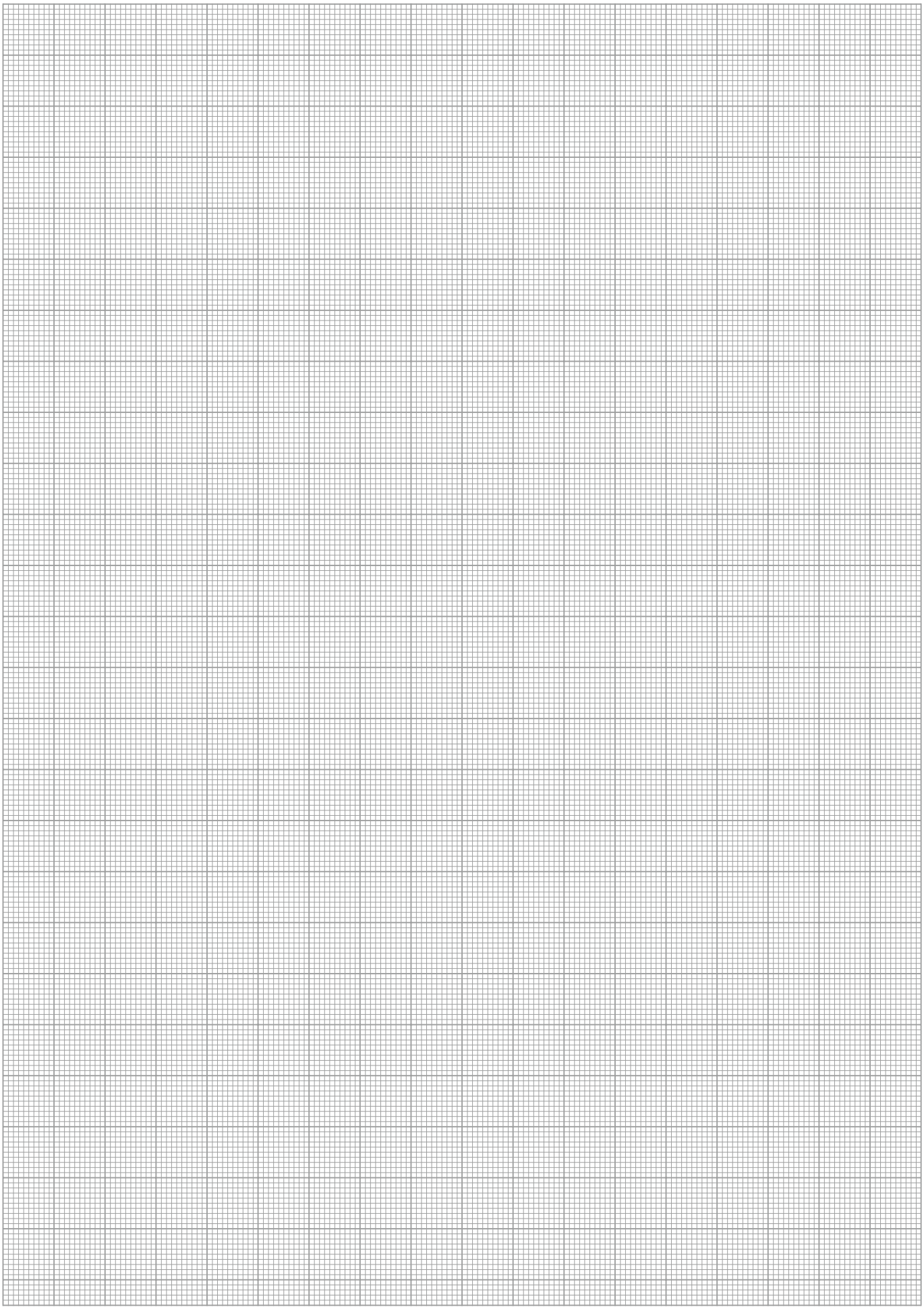

# DPG-plus 80

**Pneumatic • 2-Finger Parallel Gripper • Sealed Gripper**



## Gripping force, I.D. gripping

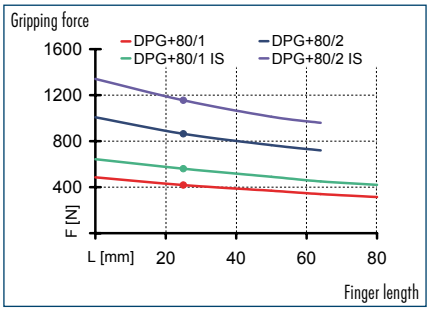


## Gripping force, O.D. gripping

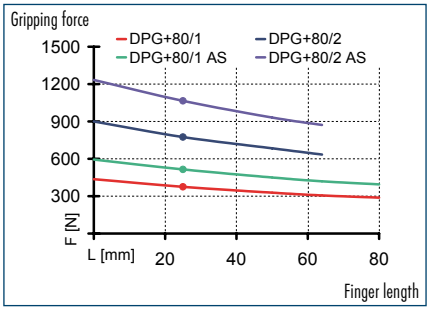


## Finger load

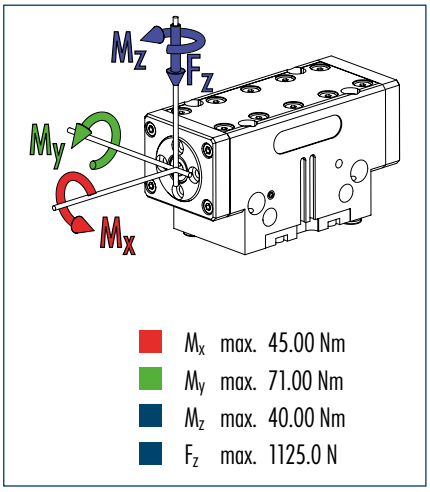


ⓘ The indicated moments and forces are static values, apply per base jaw and may occur simultaneously. $M_y$ may arise in addition to the moment generated by the gripping force itself. If the max. permitted finger weight is exceeded, it is imperative to throttle the air pressure so that the jaw movement occurs without any hitting or bouncing. Service life may be reduced.

## Technical data

| Description | | DPG-plus 80-1 | DPG-plus 80-2 | DPG-plus 80-1-AS | DPG-plus 80-2-AS | DPG-plus 80-1-IS | DPG-plus 80-2-IS |
|---|---|---|---|---|---|---|---|
| **ID** | | **0304321** | **0304322** | **0304323** | **0304324** | **0304325** | **0304326** |
| Stroke per finger | [mm] | 8 | 4 | 8 | 4 | 8 | 4 |
| Closing force | [N] | 375 | 775 | 515 | 1065 | | |
| Opening force | [N] | 415 | 860 | | | 555 | 1150 |
| Min. spring force | [N] | | | 140 | 290 | 140 | 290 |
| Weight | [kg] | 0.68 | 0.68 | 0.8 | 0.8 | 0.8 | 0.8 |
| Recommended workpiece weight | [kg] | 1.8 | 3.8 | 1.8 | 3.8 | 1.8 | 3.8 |
| Air consumption per double stroke | [cm³] | 21 | 21 | 45 | 45 | 45 | 45 |
| Min./max. operating pressure | [bar] | 2.5/8 | 2.5/8 | 4/6.5 | 4/6.5 | 4/6.5 | 4/6.5 |
| Nominal operating pressure | [bar] | 6 | 6 | 6 | 6 | 6 | 6 |
| Closing/opening time | [s] | 0.05/0.05 | 0.05/0.05 | 0.04/0.07 | 0.04/0.07 | 0.07/0.04 | 0.07/0.04 |
| Max. permitted finger length | [mm] | 80 | 64 | 80 | 64 | 80 | 64 |
| Max. permitted weight per finger | [kg] | 0.5 | 0.5 | 0.5 | 0.5 | 0.5 | 0.5 |
| IP class | | 67 | 67 | 67 | 67 | 67 | 67 |
| Min./max. ambient temperature | [°C] | -10/90 | -10/90 | -10/90 | -10/90 | -10/90 | -10/90 |
| Repeat accuracy | [mm] | 0.01 | 0.01 | 0.01 | 0.01 | 0.01 | 0.01 |
| Cleanroom class ISO-classification 14644-1 | | 5 | 5 | 5 | 5 | 5 | 5 |

### OPTIONS and their characteristics

| Force intensified version | | DPG-plus 80-1-KVZ | DPG-plus 80-2-KVZ | DPG-plus 80-1-AS-KVZ | DPG-plus 80-1-IS-KVZ |
|---|---|---|---|---|---|
| ID | | **0304327** | **0304328** | **0304329** | **0304320** |
| Closing force | [N] | 675 | 1395 | 815 | |
| Opening force | [N] | 755 | 1550 | | 895 |
| Weight | [kg] | 0.85 | 0.85 | 0.95 | 0.95 |
| Maximum pressure | [bar] | 6 | 6 | 6 | 6 |
| Max. permitted finger length | [mm] | 64 | 50 | 50 | 50 |

ⓘ Please note that an additional hose for deaeration or air purge is essential for the gripper, i.e. it requires three hoses in total. See the assembly and operating manual for detailed information.

## Main view

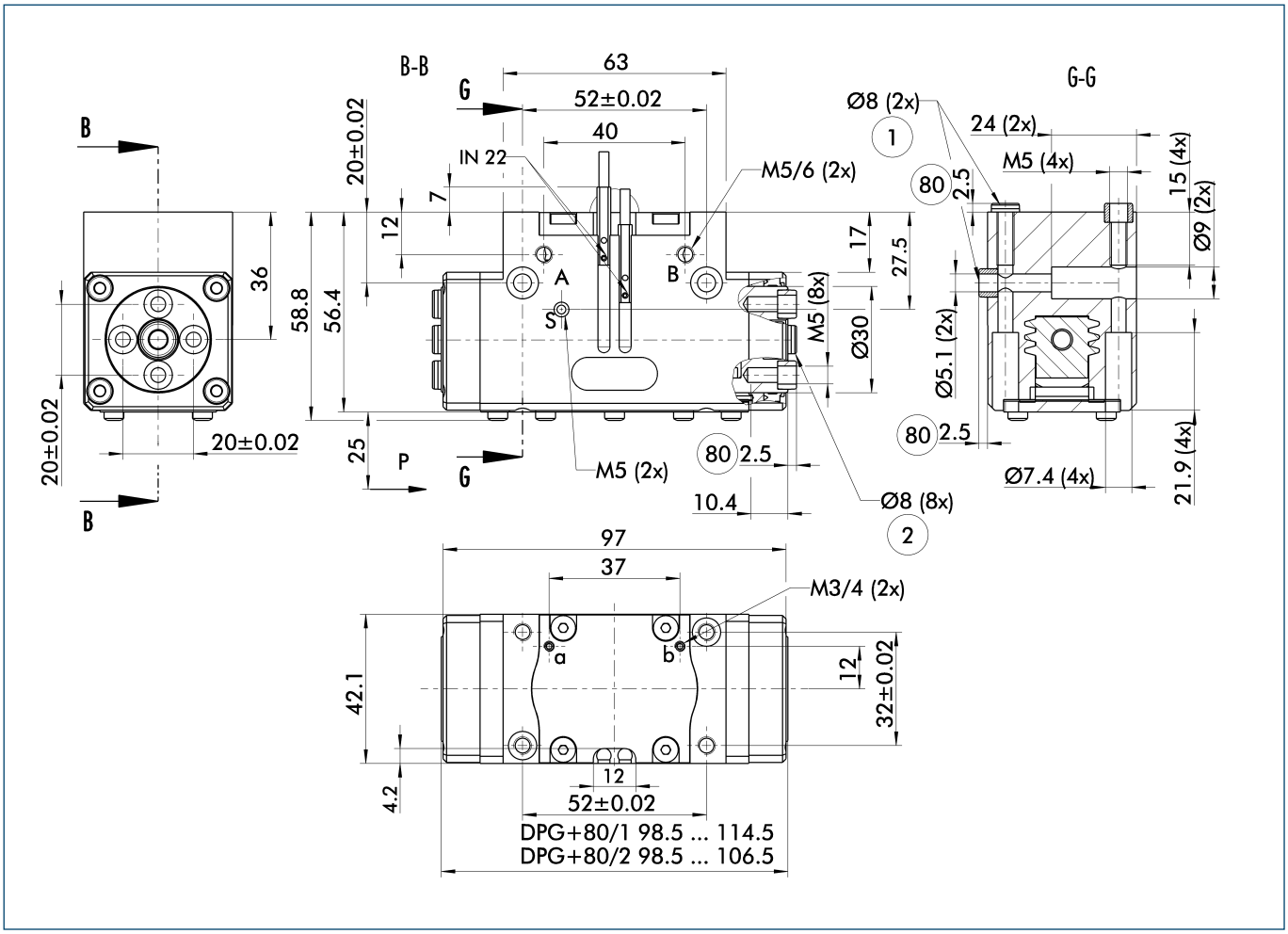


For finger connection, we recommend only to use two of the four centering bores for each finger. The drawing shows the gripper in the basic version with closed jaws, the dimensions do not include the options described below.

ⓘ The SDV-P pressure maintenance valve can be used as a gripping force maintenance device (see "Accessories" catalog section).

A, a Main/direct connection, gripper opening
B, b Main/direct connection, gripper closing
S Air purge connection
① Gripper connection
② Finger connection
(80) Depth of the centering sleeve hole in the matching part

## Hose-free direct connection

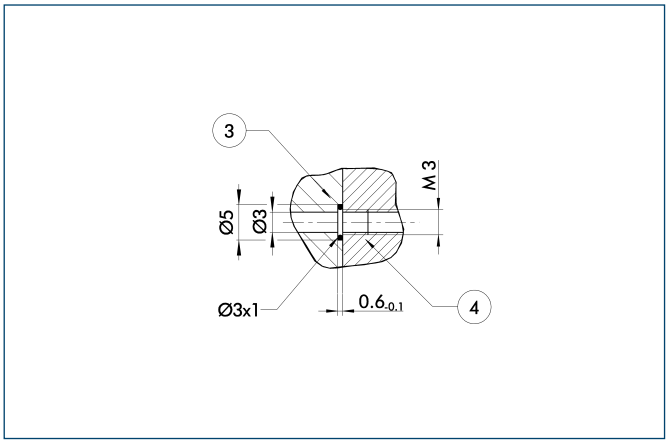


③ Adapter
④ Gripper

The direct connection is used for supplying compressed air without hoses. Instead, the pressure medium is fed through bore-holes in the mounting plate.

## AS/IS gripping force maintenance device

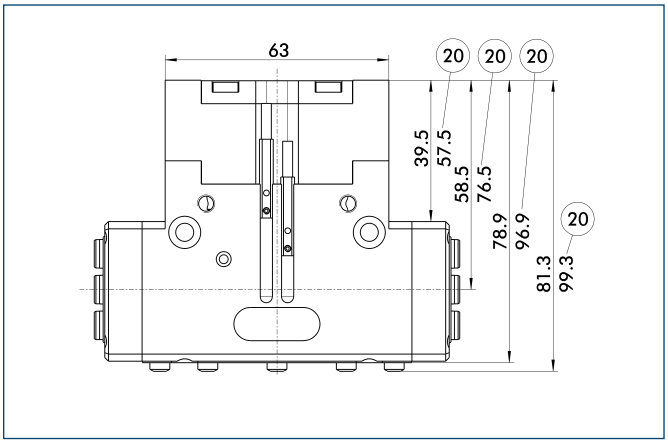


(20) For AS / IS version

The mechanical gripping force maintenance device ensures a minimum gripping force even in case of pressure drop. This acts as closing force in the AS version, and as opening force in the IS version. In addition, the gripping force maintenance device can also be used for increasing the gripping force or for single-acting gripping.

## Force intensified version

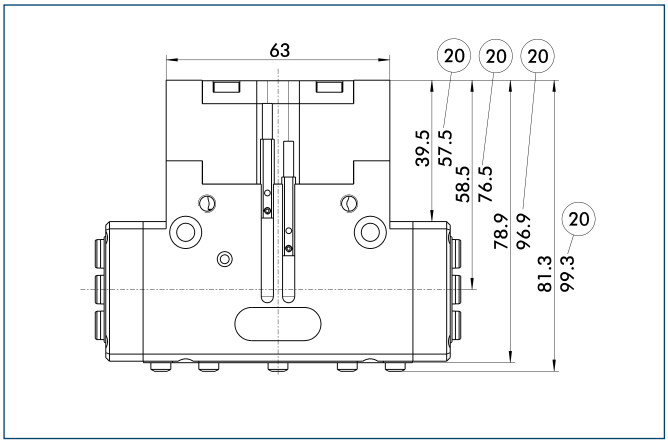


(20) For AS / IS version

The KVZ cylinder increases the gripping forces during opening and closing. A second, in series-connected piston also increases the force on the wedge hook. The full gripping force shown in the data table is sometimes only reached after a few hundred gripping cycles. Please consider that grippers which are equipped with a gripping force maintenance device (AS / IS) are higher.

## Proposed jaw design

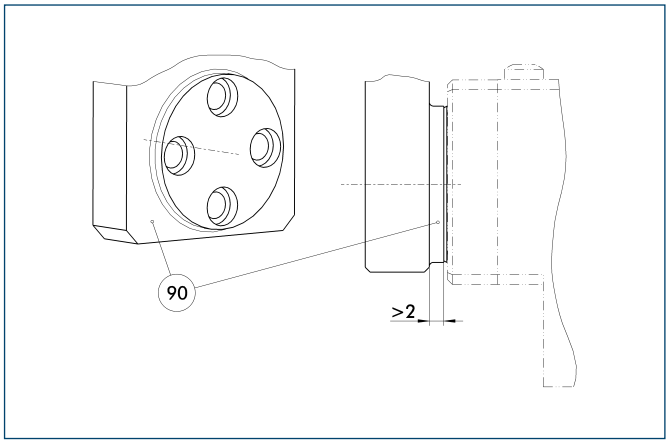


(90) Step

In order to avoid impairment of the stroke due to contamination or chips, there should be a sufficient distance between the top jaws and the gripper.

## Maximum permitted finger projection

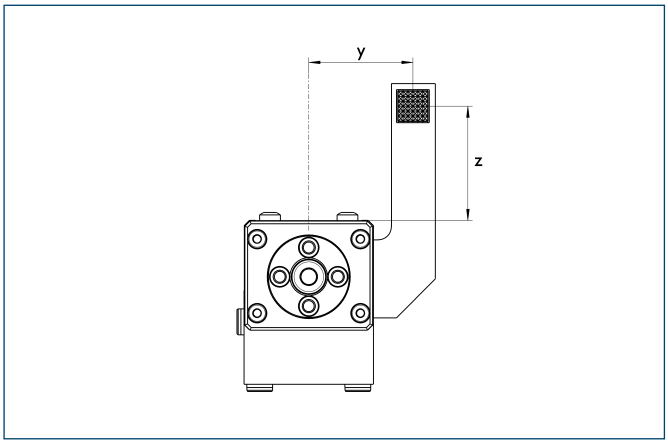


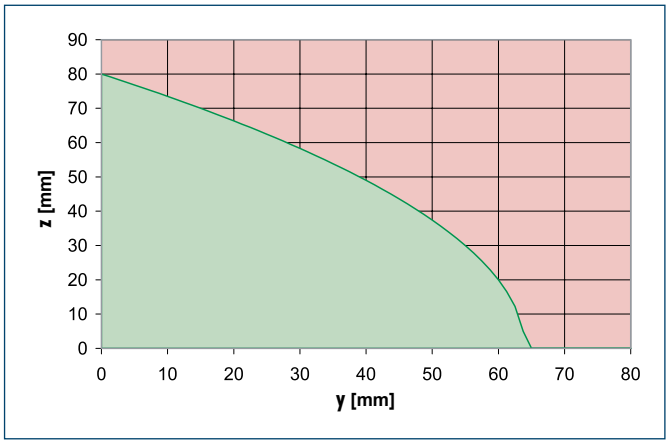


Permitted range
Inadmissible range

The curve applies to the basic version (stroke -1). For other versions, the curve will be parallel but offset in line with the max. permitted finger length.

## Intermediate Jaws

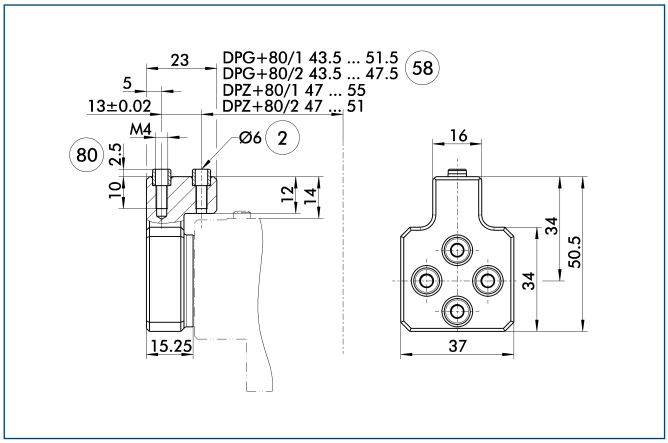


(2) Finger connection
(58) Distance from center of gripper
(80) Depth of the centering sleeve hole in the matching part

Optionally intermediate jaws can be used, enabling direct connection and alignment of top jaws and various standard accessories in Z-direction.

| Description | ID | Material | Scope of delivery |
|---|---|---|---|
| Intermediate Jaws | | | |
| ZBA-DPG-DPZ+80 | **0300193** | Aluminum | 1 |

## Tolerance compensation unit

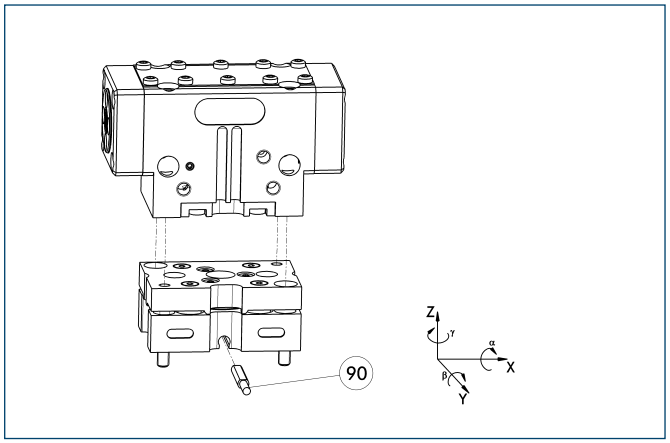


(90) Monitoring of locking

Grippers can be directly mounted without an adapter plate. Tolerance compensation unit and gripper have an identical screw connection diagram. Therefore the tolerance compensation units can be assembled later. Please consider the additional assembly height of the tolerance compensation unit. For details see catalog “Robot Accessories”.

| Description | ID | Locking | Deflection |
|---|---|---|---|
| Compensation unit | | | |
| TCU-080-3-MV-P | **0324792** | Yes | ±1.5°/±1°/±2° |
| TCU-080-3-OV-P | **0324793** | No | ±1.5°/±1°/±2° |

## Compensation unit with spring reset

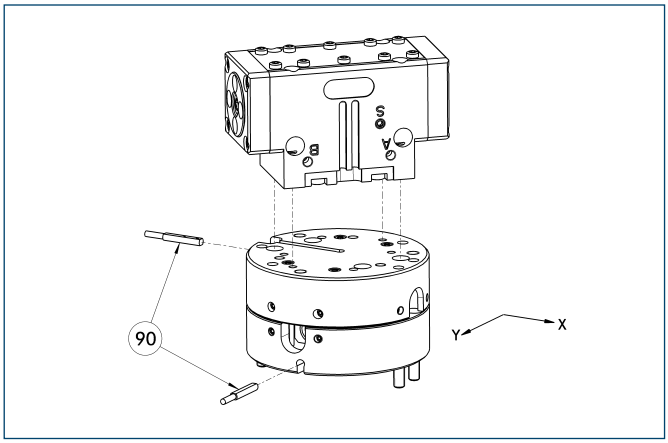


(90) Monitoring

Grippers can be directly mounted without using an adapter plate. For details see our catalog “Robot Accessories”.

| Description | ID | Compensation travel | Reset force |
|---|---|---|---|
| Compensation unit | | | |
| AGE-F-XY-063-1 | **0324940** | ±4 mm | 9 N |
| AGE-F-XY-063-2 | **0324941** | ±4 mm | 10 N |
| AGE-F-XY-063-3 | **0324942** | ±4 mm | 19.3 N |

## Programmable magnetic switch

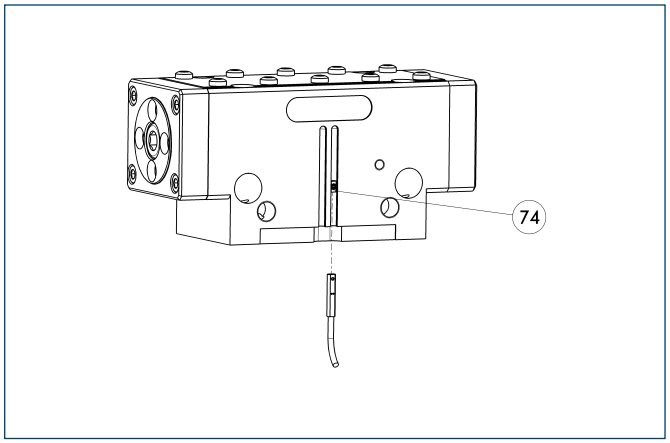


(74) Stop for MMS-P

Position monitoring with two programmable positions per sensor. The end position monitoring is mounted in the C-slot.

| Description | ID | Recommended product |
|---|---|---|
| Programmable magnetic switch | | |
| MMS-P 22-S-M8-PNP | **0301370** | • |
| MMSK-P 22-S-PNP | **0301371** | |
| Connection cables | | |
| KA BG08-L 4P-0500 | **0307767** | |
| KA BG08-L 4P-1000 | **0307768** | |
| KA BW08-L 4P-0500 | **0307765** | |
| KA BW08-L 4P-1000 | **0307766** | |
| Sensor Distributor | | |
| V2-M8-4P-2XM8-3P | **0301380** | |

ⓘ Please note the minimum permitted bending radii for the sensor cables, which are generally 35 mm.
ⓘ Per gripper one sensor (closer/NO) is required, optionally a cable extension.

You can find more detailed information and individual parts of the above-mentioned accessories in the “Accessories” catalog section.

## Electronic magnetic switches

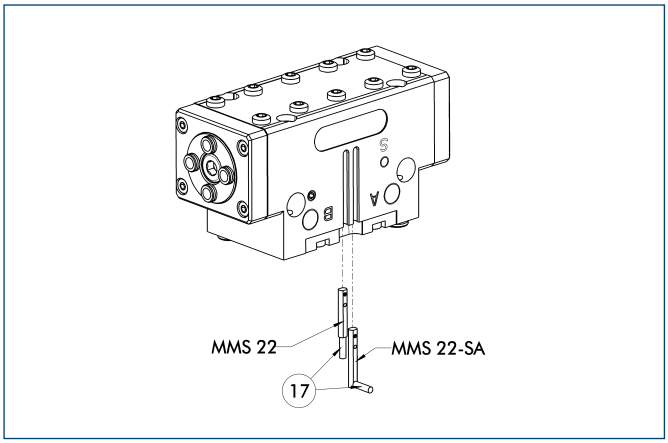


⑰ Cable outlet

End position monitoring for mounting in the C-slot

| Description | ID | Recommended product |
|---|---|---|
| Electronic magnetic switches | | |
| MMS 22-S-M5-PNP | **0301438** | |
| MMS 22-S-M5-NPN | **0301439** | |
| MMS 22-S-M8-PNP | **0301432** | • |
| MMS 22-S-M8-NPN | **0301433** | |
| MMSK 22-S-PNP | **0301434** | |
| MMSK 22-S-NPN | **0301435** | |
| Electronic magnetic switches with lateral cable outlet | | |
| MMS 22-S-M5-PNP-SA | **0301448** | |
| MMS 22-S-M5-NPN-SA | **0301449** | |
| MMS 22-S-M8-PNP-SA | **0301442** | • |
| MMS 22-S-M8-NPN-SA | **0301443** | |
| MMSK 22-S-PNP-SA | **0301444** | |
| MMSK 22-S-NPN-SA | **0301445** | |
| Connection cables | | |
| KA BG05-L 3P-0300 | **0301652** | |
| KA BG08-L 3P-0300-PNP | **0301622** | |
| KA BG08-L 3P-0500-PNP | **0301623** | |
| KA BW05-L 3P-0300 | **0301650** | |
| KA BW08-L 3P-0300-NPN | **0301602** | |
| KA BW08-L 3P-0300-PNP | **0301594** | |
| KA BW08-L 3P-0500-NPN | **9641116** | |
| KA BW08-L 3P-0500-PNP | **0301502** | |
| Cable extensions | | |
| KV BW08-SG08 3P-0030-PNP | **0301495** | |
| KV BW08-SG08 3P-0100-PNP | **0301496** | |
| KV BW08-SG08 3P-0200-PNP | **0301497** | |

ⓘ Two sensors (closer/NO) are required for each gripper, plus extension cables as an option.

ⓘ Please note the minimum permitted bending radii for the sensor cables, which are generally 35 mm.

You can find more detailed information and individual parts of the above-mentioned accessories in the “Accessories” catalog section.

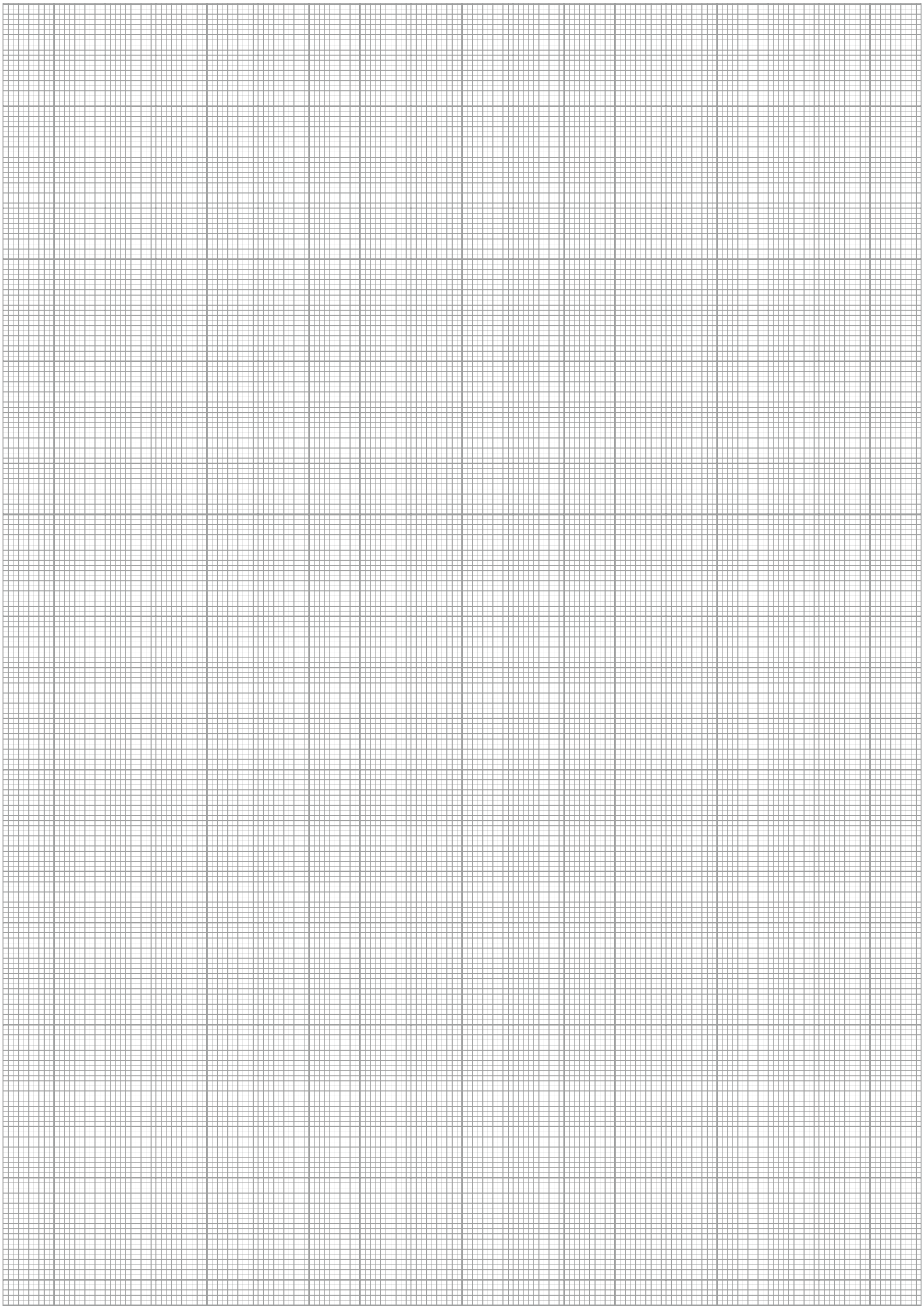

# DPG-plus 100

**Pneumatic • 2-Finger Parallel Gripper • Sealed Gripper**

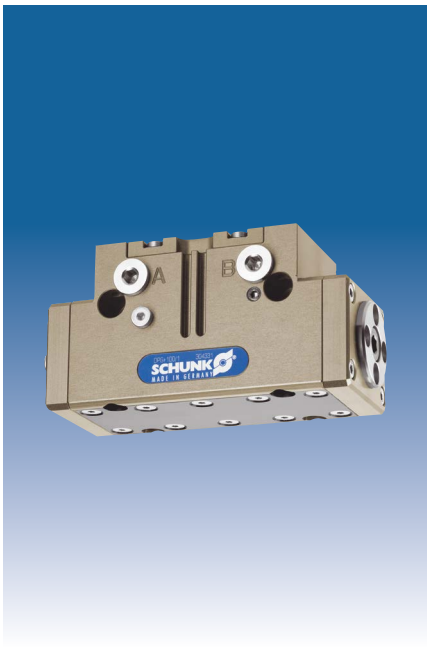

## Gripping force, I.D. gripping

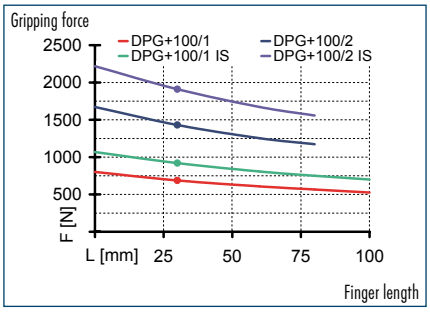


## Gripping force, O.D. gripping

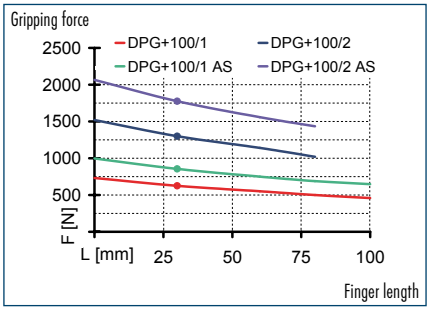


## Finger load

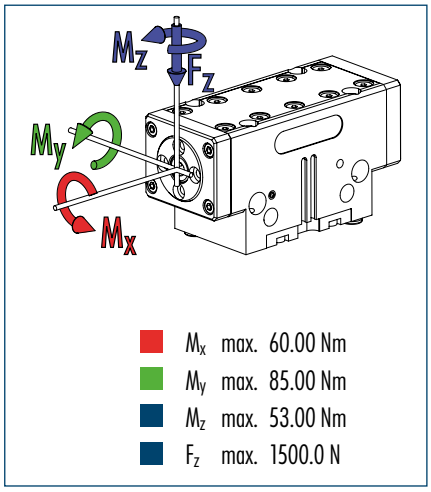


ⓘ The indicated moments and forces are static values, apply per base jaw and may occur simultaneously. $M_y$ may arise in addition to the moment generated by the gripping force itself. If the max. permitted finger weight is exceeded, it is imperative to throttle the air pressure so that the jaw movement occurs without any hitting or bouncing. Service life may be reduced.

## Technical data

| Description | | DPG-plus 100-1 | DPG-plus 100-2 | DPG-plus 100-1-AS | DPG-plus 100-2-AS | DPG-plus 100-1-IS | DPG-plus 100-2-IS |
|---|---|---|---|---|---|---|---|
| **ID** | | **0304331** | **0304332** | **0304333** | **0304334** | **0304335** | **0304336** |
| Stroke per finger | [mm] | 10 | 5 | 10 | 5 | 10 | 5 |
| Closing force | [N] | 625 | 1300 | 855 | 1775 | | |
| Opening force | [N] | 685 | 1430 | | | 915 | 1905 |
| Min. spring force | [N] | | | 230 | 475 | 230 | 475 |
| Weight | [kg] | 1.1 | 1.1 | 1.35 | 1.35 | 1.35 | 1.35 |
| Recommended workpiece weight | [kg] | 3.1 | 6.5 | 3.1 | 6.5 | 3.1 | 6.5 |
| Air consumption per double stroke | [cm³] | 40 | 40 | 85 | 85 | 85 | 85 |
| Min./max. operating pressure | [bar] | 2.5/8 | 2.5/8 | 4/6.5 | 4/6.5 | 4/6.5 | 4/6.5 |
| Nominal operating pressure | [bar] | 6 | 6 | 6 | 6 | 6 | 6 |
| Closing/opening time | [s] | 0.09/0.09 | 0.09/0.09 | 0.07/0.12 | 0.07/0.12 | 0.12/0.07 | 0.12/0.07 |
| Max. permitted finger length | [mm] | 100 | 80 | 100 | 80 | 80 | 80 |
| Max. permitted weight per finger | [kg] | 0.95 | 0.95 | 0.95 | 0.95 | 0.95 | 0.95 |
| IP class | | 67 | 67 | 67 | 67 | 67 | 67 |
| Min./max. ambient temperature | [°C] | -10/90 | -10/90 | -10/90 | -10/90 | -10/90 | -10/90 |
| Repeat accuracy | [mm] | 0.01 | 0.01 | 0.01 | 0.01 | 0.01 | 0.01 |
| Cleanroom class ISO-classification 14644-1 | | 5 | 5 | 5 | 5 | 5 | 5 |

### OPTIONS and their characteristics

| Force intensified version | | DPG-plus 100-1-KVZ | DPG-plus 100-2-KVZ | DPG-plus 100-1-AS-KVZ | DPG-plus 100-1-IS-KVZ |
|---|---|---|---|---|---|
| ID | | **0304337** | **0304338** | **0304339** | **0304330** |
| Closing force | [N] | 1125 | 2340 | 1355 | |
| Opening force | [N] | 1240 | 2560 | | 1470 |
| Weight | [kg] | 1.38 | 1.38 | 1.61 | 1.61 |
| Maximum pressure | [bar] | 6 | 6 | 6 | 6 |
| Max. permitted finger length | [mm] | 80 | 64 | 64 | 64 |

ⓘ Please note that an additional hose for deaeration or air purge is essential for the gripper, i.e. it requires three hoses in total. See the assembly and operating manual for detailed information.

## Main view

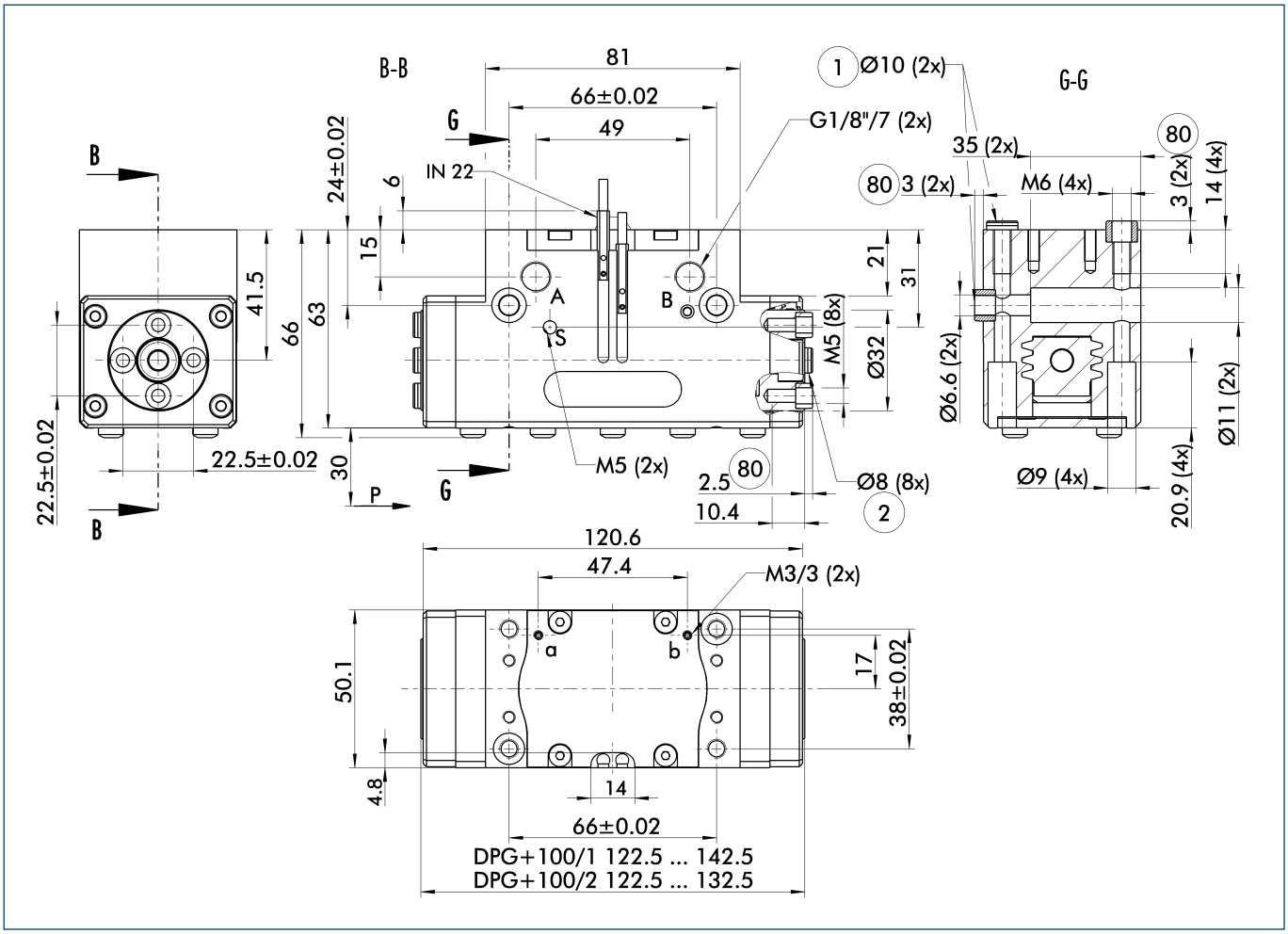


For finger connection, we recommend only to use two of the four centering bores for each finger. The drawing shows the gripper in the basic version with closed jaws, the dimensions do not include the options described below.

ⓘ The SDV-P pressure maintenance valve can be used as a gripping force maintenance device (see "Accessories" catalog section).

A, a Main/direct connection, gripper opening
B, b Main/direct connection, gripper closing
S Air purge connection
① Gripper connection
② Finger connection
80 Depth of the centering sleeve hole in the matching part

## Hose-free direct connection

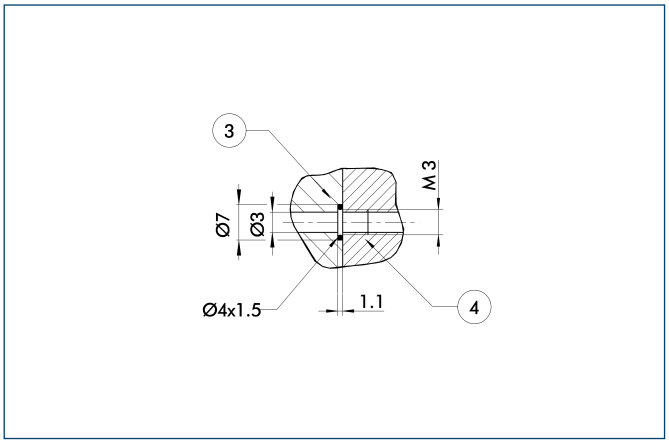


③ Adapter
④ Gripper

The direct connection is used for supplying compressed air without hoses. Instead, the pressure medium is fed through bore-holes in the mounting plate.

## AS/IS gripping force maintenance device

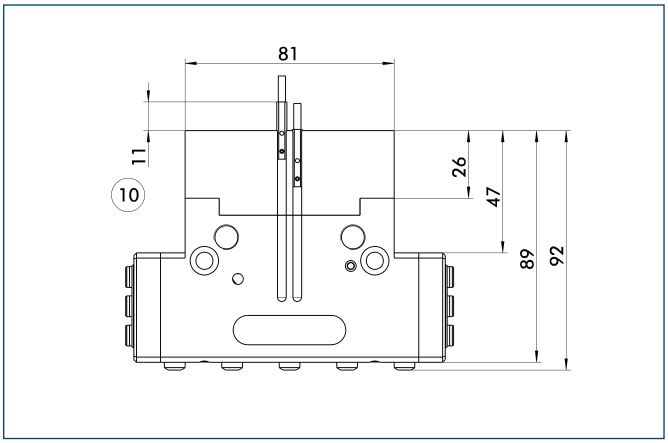


⑩ Projection applies only for AS version

The mechanical gripping force maintenance device ensures a minimum gripping force even in case of pressure drop. This acts as closing force in the AS version, and as opening force in the IS version. In addition, the gripping force maintenance device can also be used for increasing the gripping force or for single-acting gripping.

## Force intensified version

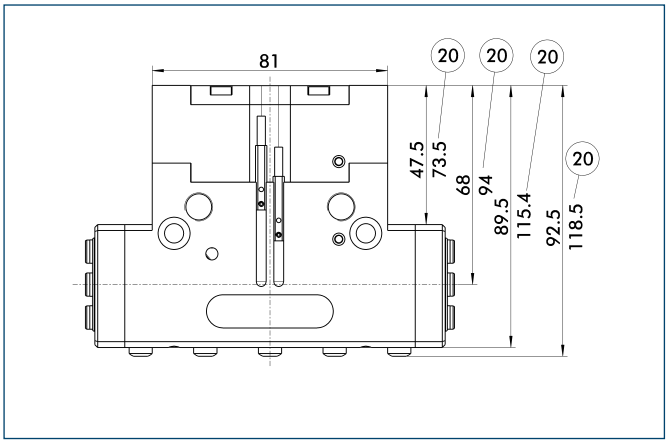


(20) For AS / IS version

The KVZ cylinder increases the gripping forces during opening and closing. A second, in series-connected piston also increases the force on the wedge hook. The full gripping force shown in the data table is sometimes only reached after a few hundred gripping cycles. Please consider that grippers which are equipped with a gripping force maintenance device (AS / IS) are higher.

## Proposed jaw design

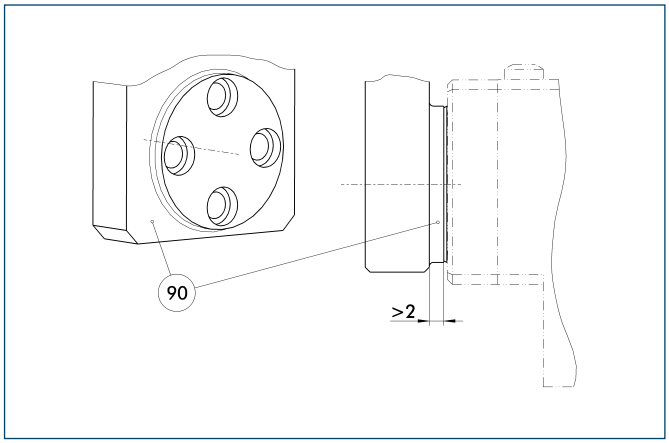


(90) Step

In order to avoid impairment of the stroke due to contamination or chips, there should be a sufficient distance between the top jaws and the gripper.

## Maximum permitted finger projection

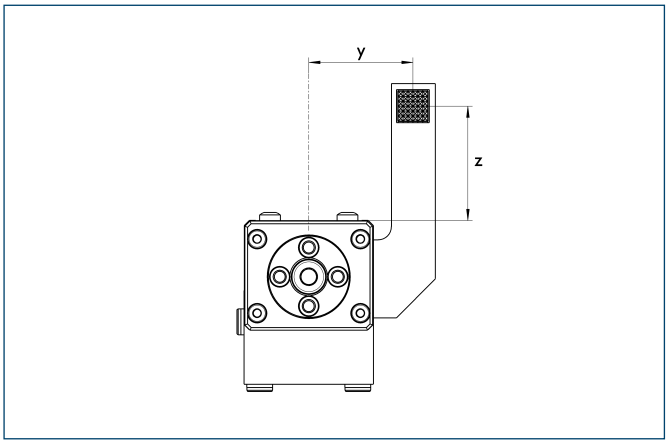


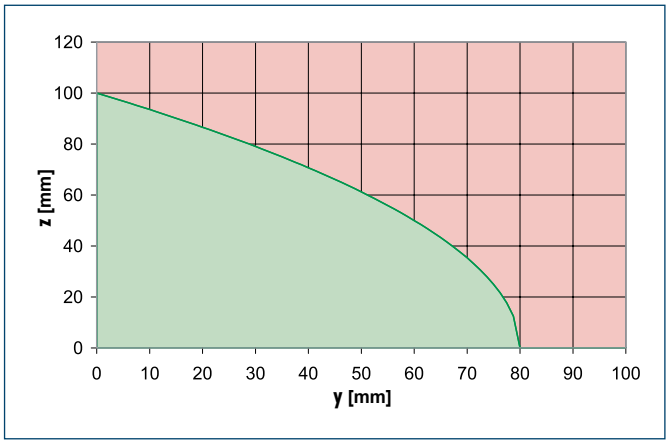


Permitted range
Inadmissible range

The curve applies to the basic version (stroke -1). For other versions, the curve will be parallel but offset in line with the max. permitted finger length.

## Intermediate Jaws

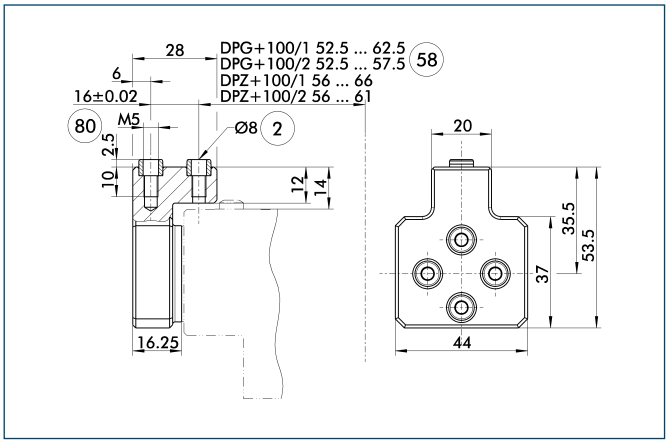


(2) Finger connection
(58) Distance from center of gripper
(80) Depth of the centering sleeve hole in the matching part

Optionally intermediate jaws can be used, enabling direct connection and alignment of top jaws and various standard accessories in Z-direction.

| Description | ID | Material | Scope of delivery |
|---|---|---|---|
| Intermediate Jaws | | | |
| ZBA-DPG-DPZ+100 | **0300194** | Aluminum | 1 |

## Tolerance compensation unit

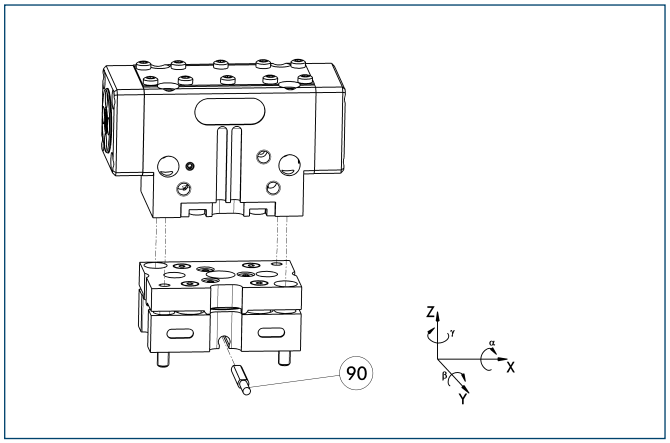


(90) Monitoring of locking

Grippers can be directly mounted without an adapter plate. Tolerance compensation unit and gripper have an identical screw connection diagram. Therefore the tolerance compensation units can be assembled later. Please consider the additional assembly height of the tolerance compensation unit. For details see catalog “Robot Accessories”.

| Description | ID | Locking | Deflection |
|---|---|---|---|
| Compensation unit | | | |
| TCU-100-2-MV-P | **0324808** | Yes | ±1.5°/±1°/±1.2° |
| TCU-100-3-OV-P | **0324811** | No | ±1.5°/±1°/±1.2° |

## Compensation unit with spring reset

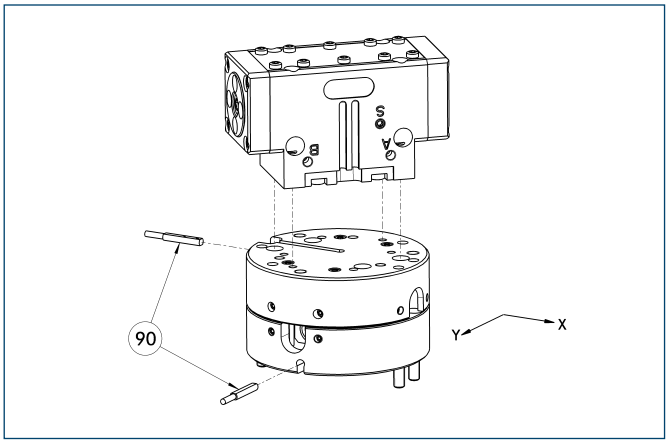


(90) Monitoring

Grippers can be directly mounted without using an adapter plate. For details see our catalog “Robot Accessories”.

| Description | ID | Compensation travel | Reset force |
|---|---|---|---|
| Compensation unit | | | |
| AGE-F-XY-080-1 | **0324960** | ±5 mm | 28.3 N |
| AGE-F-XY-080-2 | **0324961** | ±5 mm | 42.5 N |
| AGE-F-XY-080-3 | **0324962** | ±5 mm | 47.6 N |

## Programmable magnetic switch

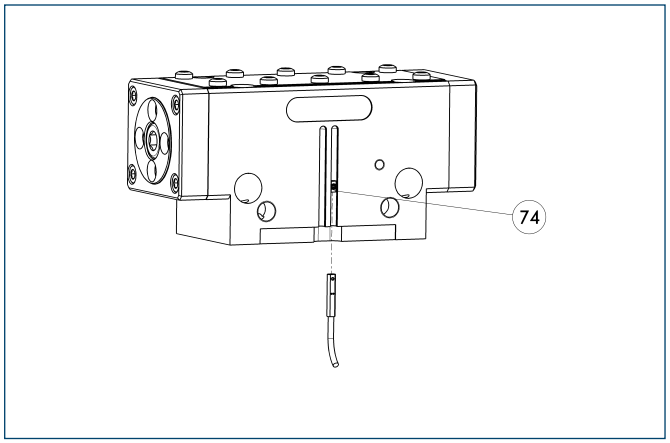


(74) Stop for MMS-P

Position monitoring with two programmable positions per sensor. The end position monitoring is mounted in the C-slot.

| Description | ID | Recommended product |
|---|---|---|
| Programmable magnetic switch | | |
| MMS-P 22-S-M8-PNP | **0301370** | • |
| MMSK-P 22-S-PNP | **0301371** | |
| Connection cables | | |
| KA BG08-L 4P-0500 | **0307767** | |
| KA BG08-L 4P-1000 | **0307768** | |
| KA BW08-L 4P-0500 | **0307765** | |
| KA BW08-L 4P-1000 | **0307766** | |
| Sensor Distributor | | |
| V2-M8-4P-2XM8-3P | **0301380** | |

ⓘ Please note the minimum permitted bending radii for the sensor cables, which are generally 35 mm.
ⓘ Per gripper one sensor (closer/NO) is required, optionally a cable extension.

You can find more detailed information and individual parts of the above-mentioned accessories in the “Accessories” catalog section.

## Electronic magnetic switches

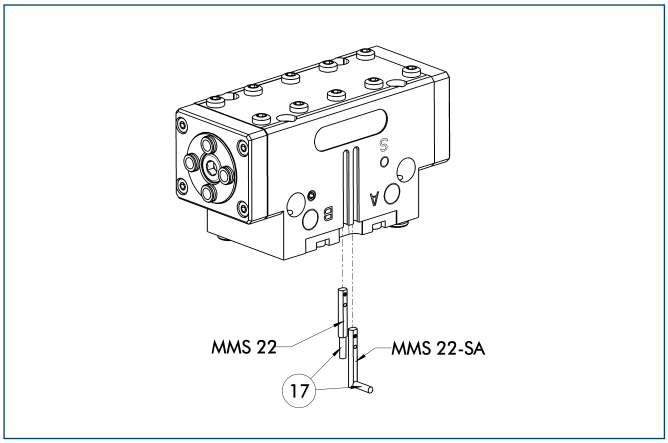


⑰ Cable outlet

End position monitoring for mounting in the C-slot

| Description | ID | Recommended product |
|---|---|---|
| Electronic magnetic switches | | |
| MMS 22-S-M5-PNP | **0301438** | |
| MMS 22-S-M5-NPN | **0301439** | |
| MMS 22-S-M8-PNP | **0301432** | • |
| MMS 22-S-M8-NPN | **0301433** | |
| MMSK 22-S-PNP | **0301434** | |
| MMSK 22-S-NPN | **0301435** | |
| Electronic magnetic switches with lateral cable outlet | | |
| MMS 22-S-M5-PNP-SA | **0301448** | |
| MMS 22-S-M5-NPN-SA | **0301449** | |
| MMS 22-S-M8-PNP-SA | **0301442** | • |
| MMS 22-S-M8-NPN-SA | **0301443** | |
| MMSK 22-S-PNP-SA | **0301444** | |
| MMSK 22-S-NPN-SA | **0301445** | |
| Reed Switches | | |
| RMS 22-S-M8 | **0377720** | • |
| Connection cables | | |
| KA BG05-L 3P-0300 | **0301652** | |
| KA BG08-L 3P-0300-PNP | **0301622** | |
| KA BG08-L 3P-0500-PNP | **0301623** | |
| KA BW05-L 3P-0300 | **0301650** | |
| KA BW08-L 3P-0300-NPN | **0301602** | |
| KA BW08-L 3P-0300-PNP | **0301594** | |
| KA BW08-L 3P-0500-NPN | **9641116** | |
| KA BW08-L 3P-0500-PNP | **0301502** | |
| Cable extensions | | |
| KV BW08-SG08 3P-0030-PNP | **0301495** | |
| KV BW08-SG08 3P-0100-PNP | **0301496** | |
| KV BW08-SG08 3P-0200-PNP | **0301497** | |

ⓘ Two sensors (closer/NO) are required for each gripper, plus extension cables as an option.

ⓘ Please note the minimum permitted bending radii for the sensor cables, which are generally 35 mm.

You can find more detailed information and individual parts of the above-mentioned accessories in the “Accessories” catalog section.

# DPG-plus 125

**Pneumatic • 2-Finger Parallel Gripper • Sealed Gripper**

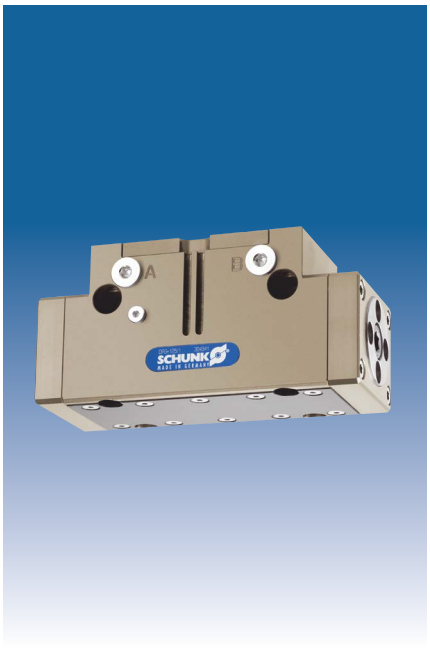

## Gripping force, I.D. gripping

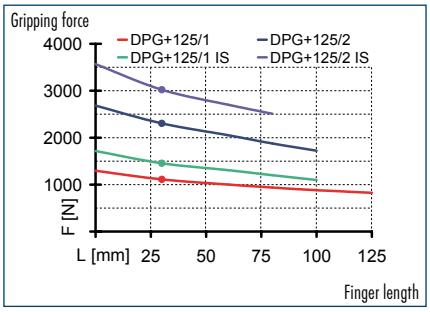


## Gripping force, O.D. gripping

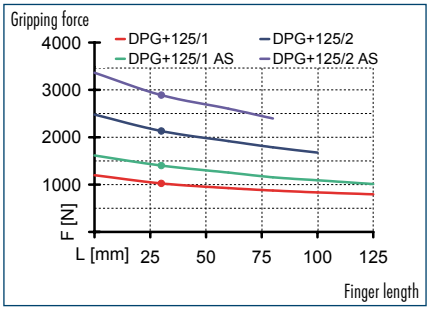


## Finger load

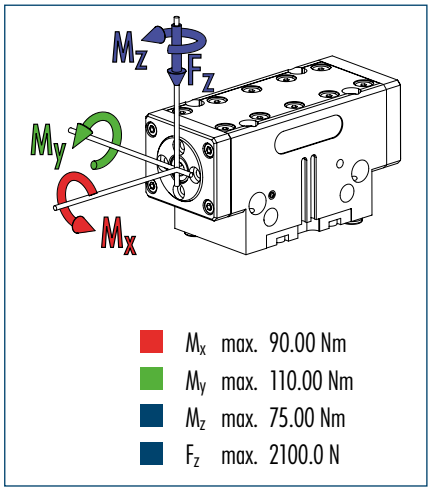


ⓘ The indicated moments and forces are static values, apply per base jaw and may occur simultaneously. $M_y$ may arise in addition to the moment generated by the gripping force itself. If the max. permitted finger weight is exceeded, it is imperative to throttle the air pressure so that the jaw movement occurs without any hitting or bouncing. Service life may be reduced.

## Technical data

| Description | | DPG-plus 125-1 | DPG-plus 125-2 | DPG-plus 125-1-AS | DPG-plus 125-2-AS | DPG-plus 125-1-IS | DPG-plus 125-2-IS |
|---|---|---|---|---|---|---|---|
| **ID** | | **0304341** | **0304342** | **0304343** | **0304344** | **0304345** | **0304346** |
| Stroke per finger | [mm] | 13 | 6 | 13 | 6 | 13 | 6 |
| Closing force | [N] | 1025 | 2130 | 1400 | 2890 | | |
| Opening force | [N] | 1110 | 2300 | | | 1485 | 3060 |
| Min. spring force | [N] | | | 375 | 760 | 375 | 760 |
| Weight | [kg] | 1.9 | 1.9 | 2.35 | 2.35 | 2.35 | 2.35 |
| Recommended workpiece weight | [kg] | 5.1 | 10.6 | 5.1 | 10.6 | 5.1 | 10.6 |
| Air consumption per double stroke | [cm³] | 81 | 81 | 158 | 158 | 158 | 158 |
| Min./max. operating pressure | [bar] | 2.5/8 | 2.5/8 | 4/6.5 | 4/6.5 | 4/6.5 | 4/6.5 |
| Nominal operating pressure | [bar] | 6 | 6 | 6 | 6 | 6 | 6 |
| Closing/opening time | [s] | 0.13/0.13 | 0.13/0.13 | 0.11/0.16 | 0.11/0.16 | 0.16/0.11 | 0.16/0.11 |
| Max. permitted finger length | [mm] | 125 | 100 | 125 | 80 | 100 | 80 |
| Max. permitted weight per finger | [kg] | 1.75 | 1.75 | 1.75 | 1.75 | 1.75 | 1.75 |
| IP class | | 67 | 67 | 67 | 67 | 67 | 67 |
| Min./max. ambient temperature | [°C] | -10/90 | -10/90 | -10/90 | -10/90 | -10/90 | -10/90 |
| Repeat accuracy | [mm] | 0.01 | 0.01 | 0.01 | 0.01 | 0.01 | 0.01 |
| Cleanroom class ISO-classification 14644-1 | | 5 | 5 | 5 | 5 | 5 | 5 |

### OPTIONS and their characteristics

| Force intensified version | | DPG-plus 125-1-KVZ | DPG-plus 125-2-KVZ | DPG-plus 125-1-AS-KVZ | DPG-plus 125-1-IS-KVZ |
|---|---|---|---|---|---|
| ID | | **0304347** | **0304348** | **0304349** | **0304340** |
| Closing force | [N] | 1845 | 3835 | 2220 | |
| Opening force | [N] | 2000 | 4140 | | 2375 |
| Weight | [kg] | 2.4 | 2.4 | 2.9 | 2.9 |
| Maximum pressure | [bar] | 6 | 6 | 6 | 6 |
| Max. permitted finger length | [mm] | 80 | 64 | 64 | 64 |

ⓘ Please note that an additional hose for deaeration or air purge is essential for the gripper, i.e. it requires three hoses in total. See the assembly and operating manual for detailed information.

## Main view

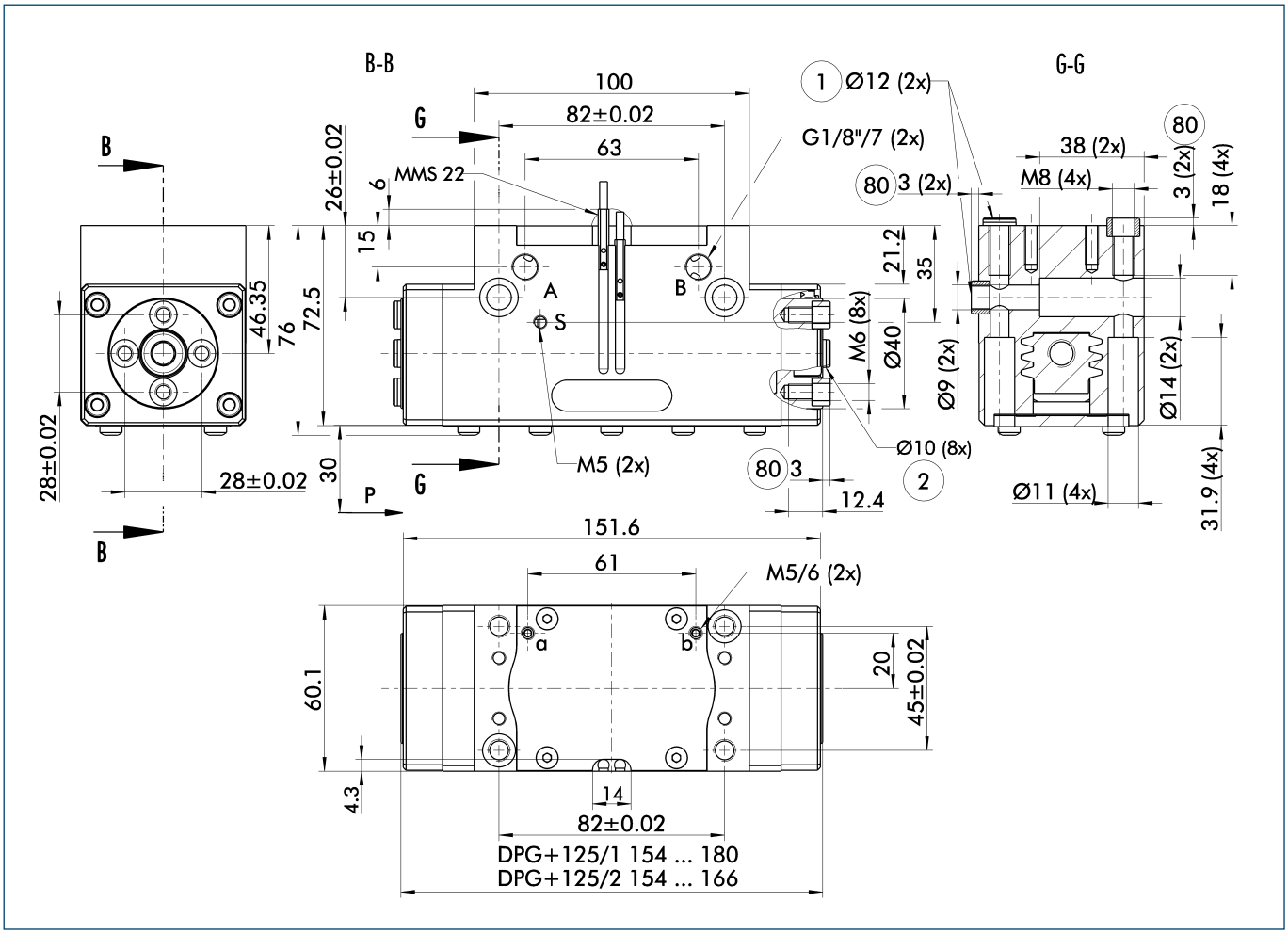


For finger connection, we recommend only to use two of the four centering bores for each finger. The drawing shows the gripper in the basic version with closed jaws, the dimensions do not include the options described below.

ⓘ The SDV-P pressure maintenance valve can be used as a gripping force maintenance device (see "Accessories" catalog section).

A, a Main/direct connection, gripper opening
B, b Main/direct connection, gripper closing
S Air purge connection
① Gripper connection
② Finger connection
80 Depth of the centering sleeve hole in the matching part

## AS/IS gripping force maintenance device

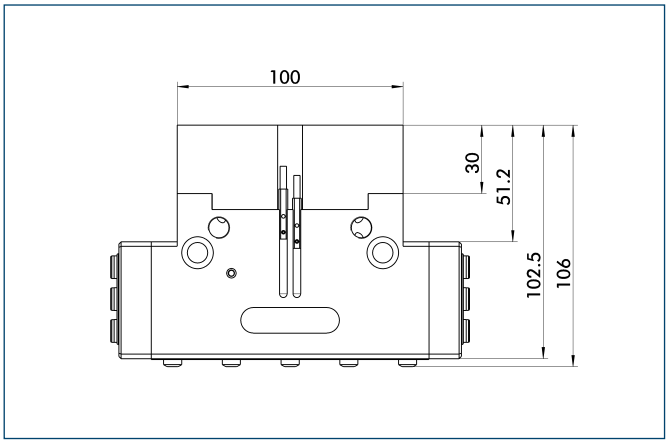


The mechanical gripping force maintenance device ensures a minimum gripping force even in case of pressure drop. This acts as closing force in the AS version, and as opening force in the IS version. In addition, the gripping force maintenance device can also be used for increasing the gripping force or for single-acting gripping.

## Force intensified version

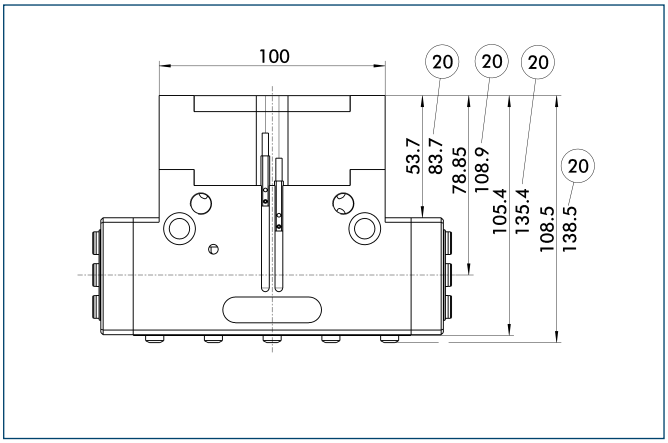


⑳ For AS / IS version

The KVZ cylinder increases the gripping forces during opening and closing. A second, in series-connected piston also increases the force on the wedge hook. The full gripping force shown in the data table is sometimes only reached after a few hundred gripping cycles. Please consider that grippers which are equipped with a gripping force maintenance device (AS / IS) are higher.

## Proposed jaw design

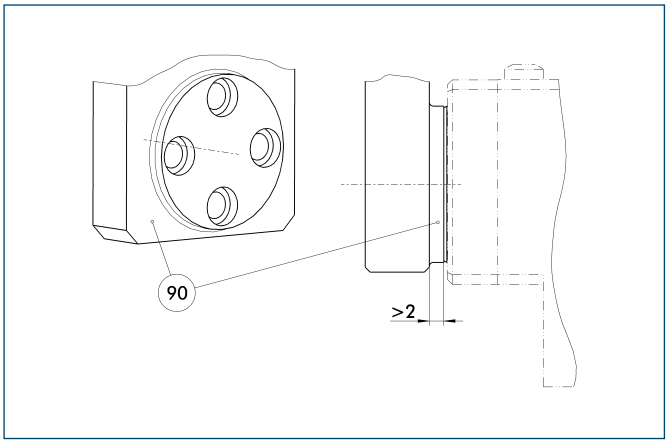


(90) Step

In order to avoid impairment of the stroke due to contamination or chips, there should be a sufficient distance between the top jaws and the gripper.

## Maximum permitted finder projection

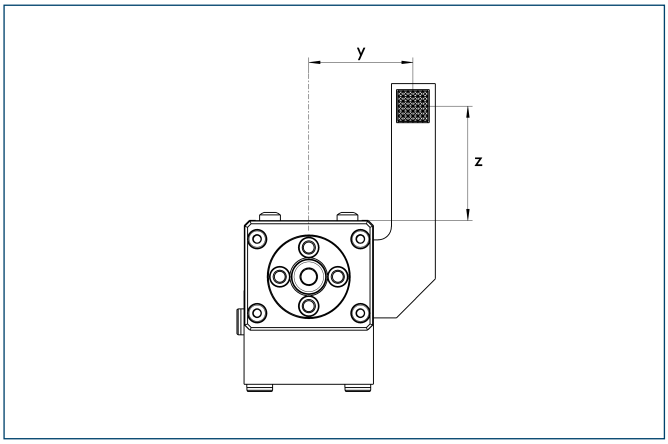


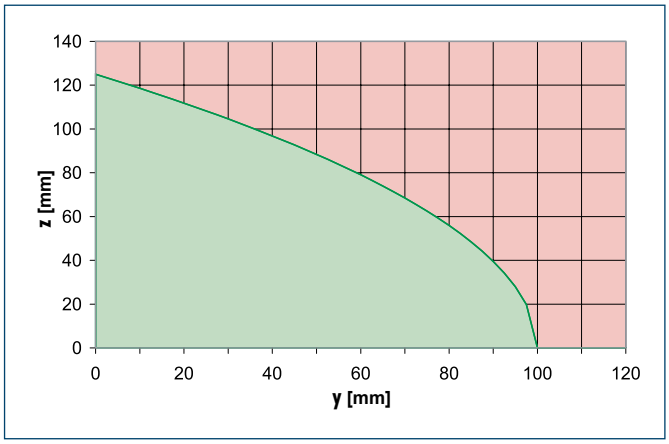


Permitted range
Inadmissible range

The curve applies to the basic version (stroke -1). For other versions, the curve will be parallel but offset in line with the max. permitted finger length.

## Intermediate Jaws

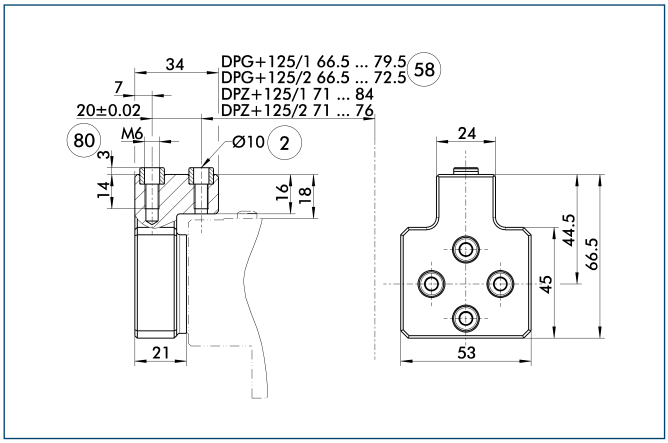


(2) Finger connection
(58) Distance from center of gripper
(80) Depth of the centering sleeve hole in the matching part

Optionally intermediate jaws can be used, enabling direct connection and alignment of top jaws and various standard accessories in Z-direction.

| Description | ID | Material | Scope of delivery |
|---|---|---|---|
| Intermediate Jaws | | | |
| ZBA-DPG-DPZ+125 | **0300195** | Aluminum | 1 |

## Tolerance compensation unit

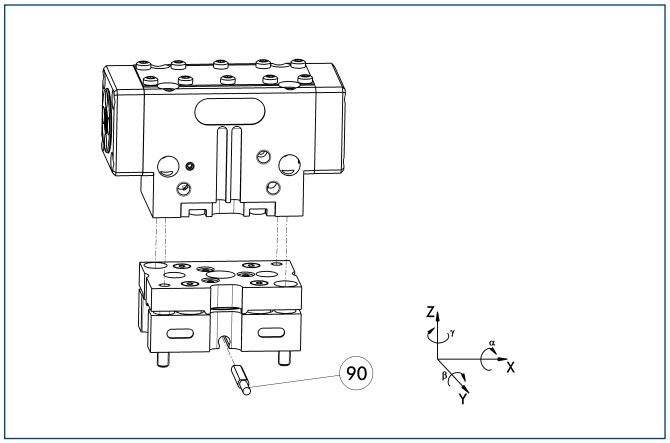


(90) Monitoring of locking

Grippers can be directly mounted without an adapter plate. Tolerance compensation unit and gripper have an identical screw connection diagram. Therefore the tolerance compensation units can be assembled later. Please consider the additional assembly height of the tolerance compensation unit. For details see catalog “Robot Accessories”.

| Description | ID | Locking | Deflection |
|---|---|---|---|
| Compensation unit | | | |
| TCU-125-3-MV-P | **0324828** | Yes | ±1.5°/±1°/±1.5° |
| TCU-125-3-OV-P | **0324829** | No | ±1.5°/±1°/±1.5° |

## Compensation unit with spring reset

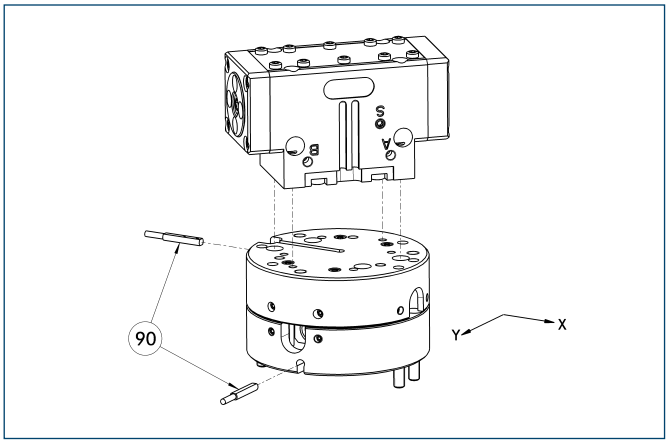


(90) Monitoring

Grippers can be directly mounted without using an adapter plate. For details see our catalog “Robot Accessories”.

| Description | ID | Compensation travel | Reset force |
|---|---|---|---|
| Compensation unit | | | |
| AGE-F-XY-080-1 | **0324960** | ±5 mm | 28.3 N |
| AGE-F-XY-080-2 | **0324961** | ±5 mm | 42.5 N |
| AGE-F-XY-080-3 | **0324962** | ±5 mm | 47.6 N |

## Programmable magnetic switch

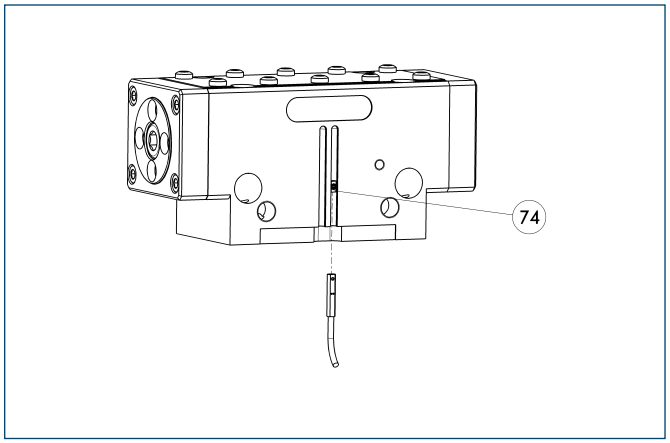


(74) Stop for MMS-P

Position monitoring with two programmable positions per sensor. The end position monitoring is mounted in the C-slot.

| Description | ID | Recommended product |
|---|---|---|
| Programmable magnetic switch | | |
| MMS-P 22-S-M8-PNP | **0301370** | • |
| MMSK-P 22-S-PNP | **0301371** | |
| Connection cables | | |
| KA BG08-L 4P-0500 | **0307767** | |
| KA BG08-L 4P-1000 | **0307768** | |
| KA BW08-L 4P-0500 | **0307765** | |
| KA BW08-L 4P-1000 | **0307766** | |
| Sensor Distributor | | |
| V2-M8-4P-2XM8-3P | **0301380** | |

ⓘ Please note the minimum permitted bending radii for the sensor cables, which are generally 35 mm.
ⓘ Per gripper one sensor (closer/NO) is required, optionally a cable extension.

You can find more detailed information and individual parts of the above-mentioned accessories in the “Accessories” catalog section.

## Electronic magnetic switches

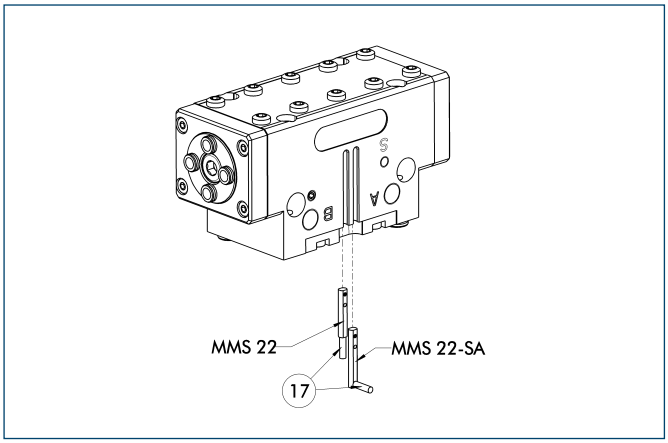


⑰ Cable outlet

End position monitoring for mounting in the C-slot

| Description | ID | Recommended product |
|---|---|---|
| Electronic magnetic switches | | |
| MMS 22-S-M5-PNP | **0301438** | |
| MMS 22-S-M5-NPN | **0301439** | |
| MMS 22-S-M8-PNP | **0301432** | • |
| MMS 22-S-M8-NPN | **0301433** | |
| MMSK 22-S-PNP | **0301434** | |
| MMSK 22-S-NPN | **0301435** | |
| Electronic magnetic switches with lateral cable outlet | | |
| MMS 22-S-M5-PNP-SA | **0301448** | |
| MMS 22-S-M5-NPN-SA | **0301449** | |
| MMS 22-S-M8-PNP-SA | **0301442** | • |
| MMS 22-S-M8-NPN-SA | **0301443** | |
| MMSK 22-S-PNP-SA | **0301444** | |
| MMSK 22-S-NPN-SA | **0301445** | |
| Reed Switches | | |
| RMS 22-S-M8 | **0377720** | • |
| Connection cables | | |
| KA BG05-L 3P-0300 | **0301652** | |
| KA BG08-L 3P-0300-PNP | **0301622** | |
| KA BG08-L 3P-0500-PNP | **0301623** | |
| KA BW05-L 3P-0300 | **0301650** | |
| KA BW08-L 3P-0300-NPN | **0301602** | |
| KA BW08-L 3P-0300-PNP | **0301594** | |
| KA BW08-L 3P-0500-NPN | **9641116** | |
| KA BW08-L 3P-0500-PNP | **0301502** | |
| Cable extensions | | |
| KV BW08-SG08 3P-0030-PNP | **0301495** | |
| KV BW08-SG08 3P-0100-PNP | **0301496** | |
| KV BW08-SG08 3P-0200-PNP | **0301497** | |

ⓘ Two sensors (closer/NO) are required for each gripper, plus extension cables as an option.

ⓘ Please note the minimum permitted bending radii for the sensor cables, which are generally 35 mm.

You can find more detailed information and individual parts of the above-mentioned accessories in the “Accessories” catalog section.

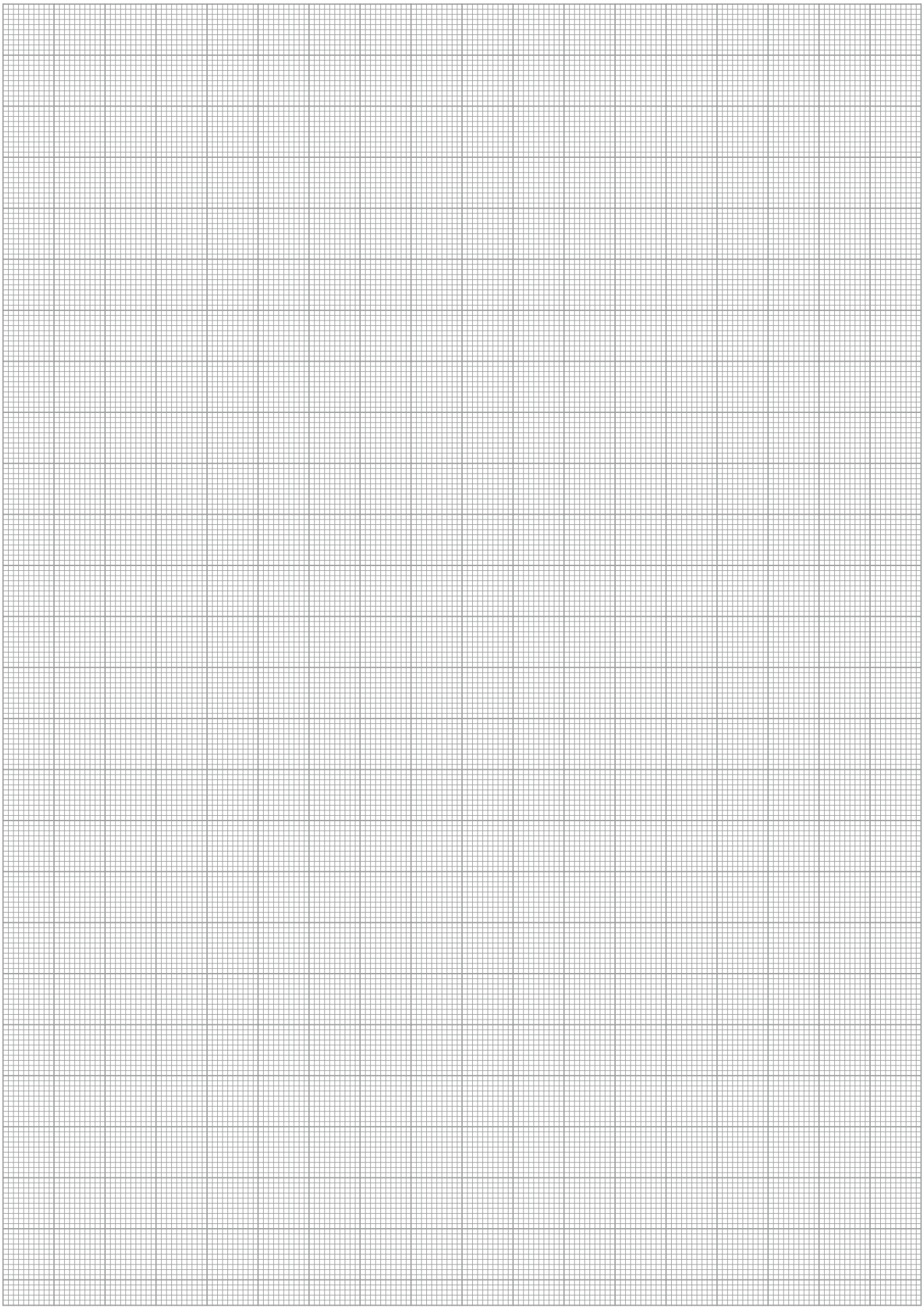

# DPG-plus 160

**Pneumatic • 2-Finger Parallel Gripper • Sealed Gripper**



## Gripping force, I.D. gripping

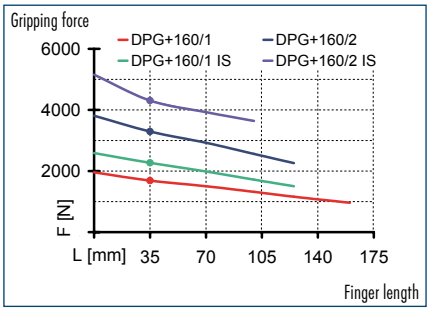


## Gripping force, O.D. gripping

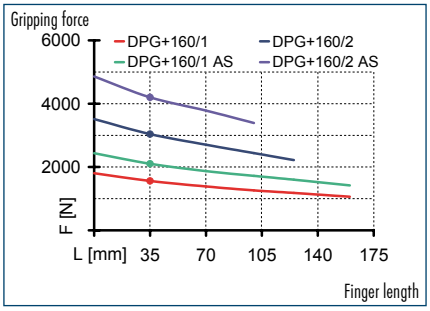


## Finger load

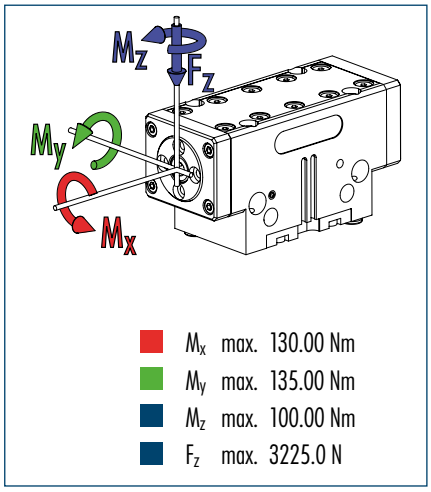


ⓘ The indicated moments and forces are static values, apply per base jaw and may occur simultaneously. $M_y$ may arise in addition to the moment generated by the gripping force itself. If the max. permitted finger weight is exceeded, it is imperative to throttle the air pressure so that the jaw movement occurs without any hitting or bouncing. Service life may be reduced.

## Technical data

| Description | | DPG-plus 160-1 | DPG-plus 160-2 | DPG-plus 160-1-AS | DPG-plus 160-2-AS | DPG-plus 160-1-IS | DPG-plus 160-2-IS |
|---|---|---|---|---|---|---|---|
| **ID** | | **0304351** | **0304352** | **0304353** | **0304354** | **0304355** | **0304356** |
| Stroke per finger | [mm] | 16 | 8 | 16 | 8 | 16 | 8 |
| Closing force | [N] | 1560 | 3040 | 2100 | 4200 | | |
| Opening force | [N] | 1680 | 3290 | | | 2220 | 4450 |
| Min. spring force | [N] | | | 540 | 1160 | 540 | 1160 |
| Weight | [kg] | 3.65 | 3.65 | 4.65 | 4.65 | 4.65 | 4.65 |
| Recommended workpiece weight | [kg] | 7.8 | 15.2 | 7.8 | 15.2 | 7.8 | 15.2 |
| Air consumption per double stroke | [cm³] | 157 | 157 | 265 | 265 | 265 | 265 |
| Min./max. operating pressure | [bar] | 2.5/8 | 2.5/8 | 4/6.5 | 4/6.5 | 4/6.5 | 4/6.5 |
| Nominal operating pressure | [bar] | 6 | 6 | 6 | 6 | 6 | 6 |
| Closing/opening time | [s] | 0.19/0.19 | 0.19/0.19 | 0.16/0.33 | 0.16/0.33 | 0.33/0.16 | 0.33/0.16 |
| Max. permitted finger length | [mm] | 160 | 125 | 160 | 100 | 125 | 100 |
| Max. permitted weight per finger | [kg] | 3 | 3 | 3 | 3 | 3 | 3 |
| IP class | | 67 | 67 | 67 | 67 | 67 | 67 |
| Min./max. ambient temperature | [°C] | -10/90 | -10/90 | -10/90 | -10/90 | -10/90 | -10/90 |
| Repeat accuracy | [mm] | 0.01 | 0.01 | 0.01 | 0.01 | 0.01 | 0.01 |
| Cleanroom class ISO-classification 14644-1 | | 5 | 5 | 5 | 5 | 5 | 5 |

### OPTIONS and their characteristics

| Force intensified version | | DPG-plus 160-1-KVZ | DPG-plus 160-2-KVZ | DPG-plus 160-1-AS-KVZ | DPG-plus 160-1-IS-KVZ |
|---|---|---|---|---|---|
| ID | | **0304357** | **0304358** | **0304359** | **0304350** |
| Closing force | [N] | 2810 | 5470 | 3350 | |
| Opening force | [N] | 3025 | 5920 | | 3520 |
| Weight | [kg] | 5.8 | 5.8 | 8 | 8 |
| Maximum pressure | [bar] | 6 | 6 | 6 | 6 |
| Max. permitted finger length | [mm] | 100 | 80 | 80 | 80 |

ⓘ Please note that an additional hose for deaeration or air purge is essential for the gripper, i.e. it requires three hoses in total. See the assembly and operating manual for detailed information.

## Main view

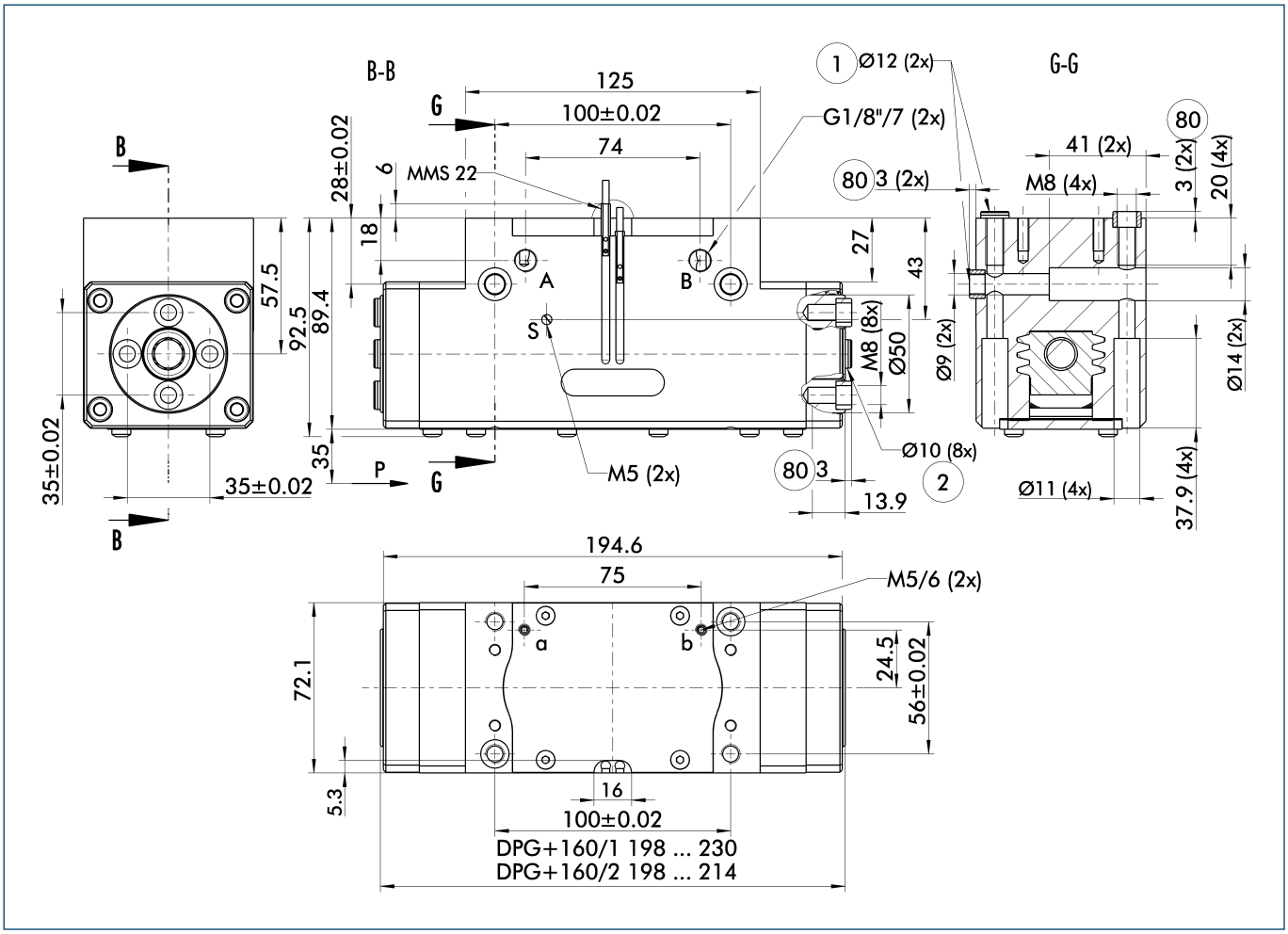


For finger connection, we recommend only to use two of the four centering bores for each finger. The drawing shows the gripper in the basic version with closed jaws, the dimensions do not include the options described below.

ⓘ The SDV-P pressure maintenance valve can be used as a gripping force maintenance device (see "Accessories" catalog section).

A, a Main/direct connection, gripper opening
B, b Main/direct connection, gripper closing
S Air purge connection
① Gripper connection
② Finger connection
80 Depth of the centering sleeve hole in the matching part

## AS/IS gripping force maintenance device

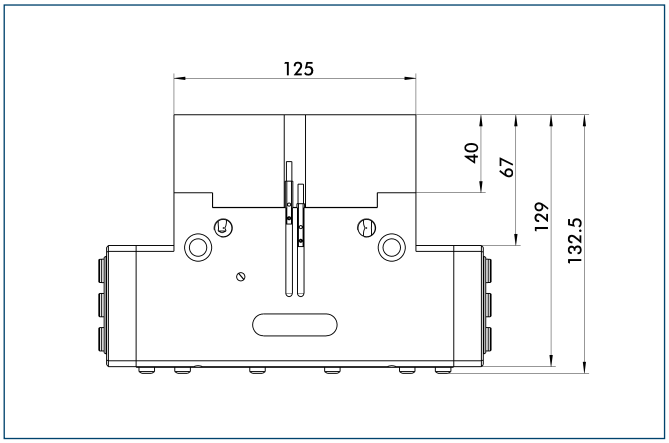


The mechanical gripping force maintenance device ensures a minimum gripping force even in case of pressure drop. This acts as closing force in the AS version, and as opening force in the IS version. In addition, the gripping force maintenance device can also be used for increasing the gripping force or for single-acting gripping.

## Force intensified version

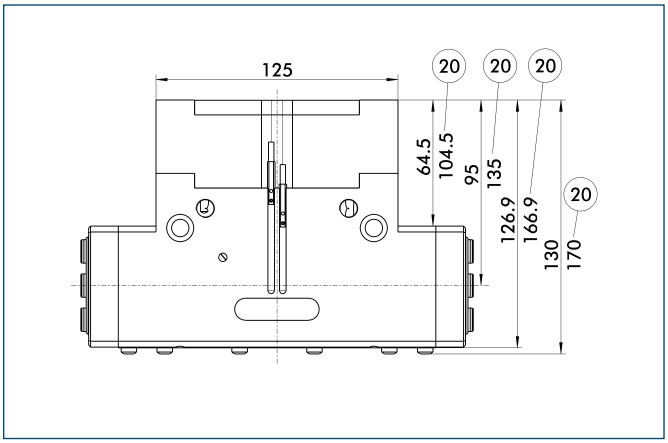


⑳ For AS / IS version

The KVZ cylinder increases the gripping forces during opening and closing. A second, in series-connected piston also increases the force on the wedge hook. The full gripping force shown in the data table is sometimes only reached after a few hundred gripping cycles. Please consider that grippers which are equipped with a gripping force maintenance device (AS / IS) are higher.

## Proposed jaw design

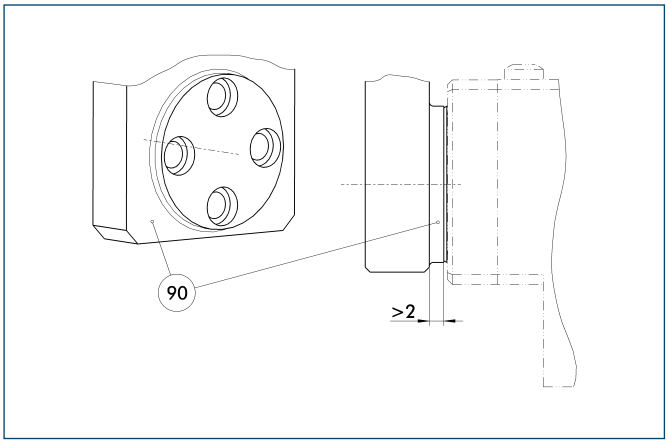


(90) Step

In order to avoid impairment of the stroke due to contamination or chips, there should be a sufficient distance between the top jaws and the gripper.

## Maximum permitted finder projection

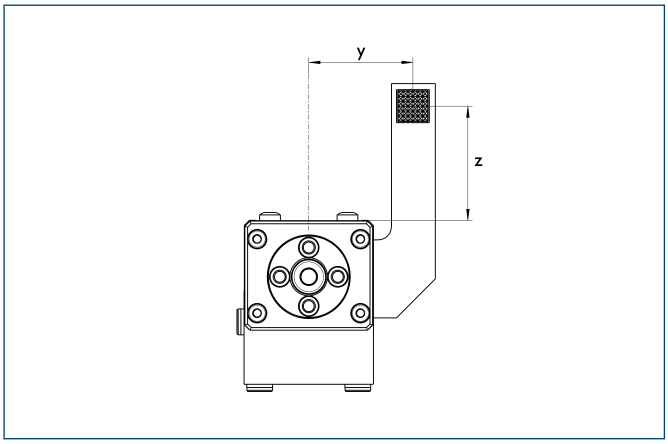


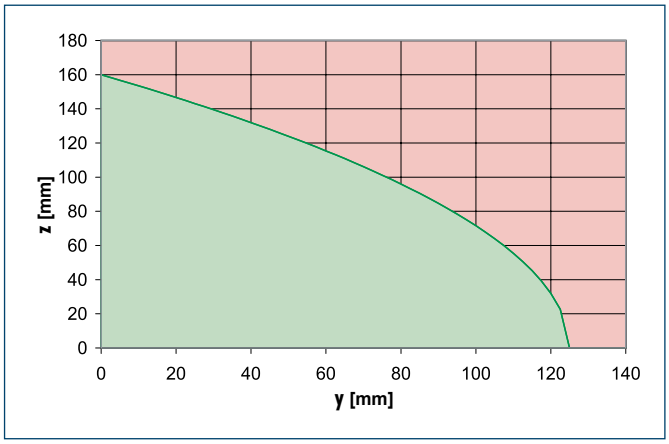


Permitted range
Inadmissible range

The curve applies to the basic version (stroke -1). For other versions, the curve will be parallel but offset in line with the max. permitted finger length.

## Intermediate Jaws

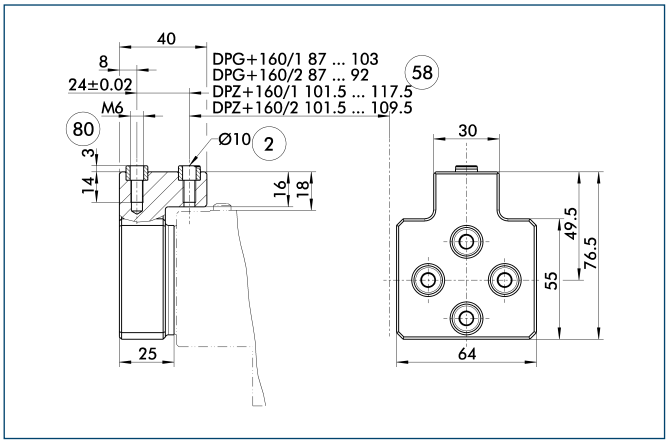


(2) Finger connection
(58) Distance from center of gripper
(80) Depth of the centering sleeve hole in the matching part

Optionally intermediate jaws can be used, enabling direct connection and alignment of top jaws and various standard accessories in Z-direction.

| Description | ID | Material | Scope of delivery |
|---|---|---|---|
| Intermediate Jaws | | | |
| ZBA-DPG-DPZ+160 | **0300196** | Aluminum | 1 |

## Programmable magnetic switch

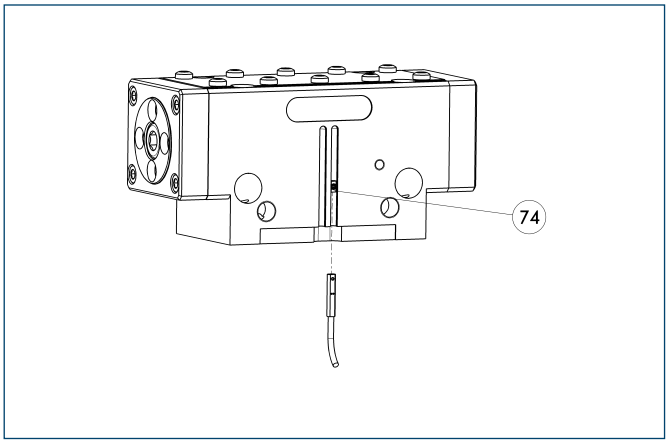


(74) Stop for MMS-P

Position monitoring with two programmable positions per sensor. The end position monitoring is mounted in the C-slot.

| Description | ID | Recommended product |
|---|---|---|
| Programmable magnetic switch | | |
| MMS-P 22-S-M8-PNP | **0301370** | • |
| MMSK-P 22-S-PNP | **0301371** | |
| Connection cables | | |
| KA BG08-L 4P-0500 | **0307767** | |
| KA BG08-L 4P-1000 | **0307768** | |
| KA BW08-L 4P-0500 | **0307765** | |
| KA BW08-L 4P-1000 | **0307766** | |
| Sensor Distributor | | |
| V2-M8-4P-2XM8-3P | **0301380** | |

ⓘ Please note the minimum permitted bending radii for the sensor cables, which are generally 35 mm.
ⓘ Per gripper one sensor (closer/NO) is required, optionally a cable extension.

## Tolerance compensation unit

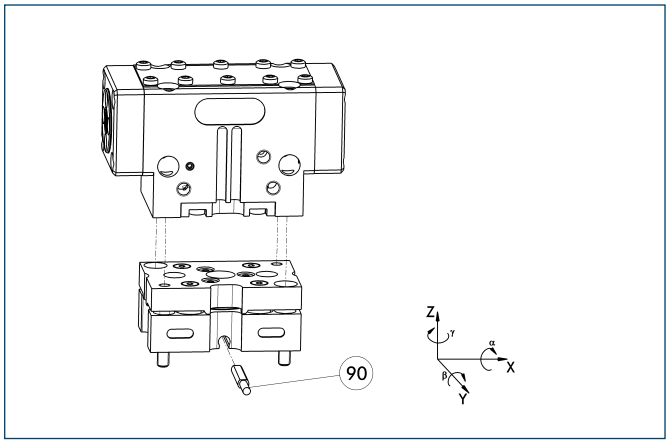


(90) Monitoring of locking

Grippers can be directly mounted without an adapter plate. Tolerance compensation unit and gripper have an identical screw connection diagram. Therefore the tolerance compensation units can be assembled later. Please consider the additional assembly height of the tolerance compensation unit. For details see catalog “Robot Accessories”.

| Description | ID | Locking | Deflection |
|---|---|---|---|
| Compensation unit | | | |
| TCU-160-3-MV-P | **0324846** | Yes | ±2°/±1°/±1.5° |
| TCU-160-3-OV-P | **0324847** | No | ±2°/±1°/±1.5° |

## Electronic magnetic switches

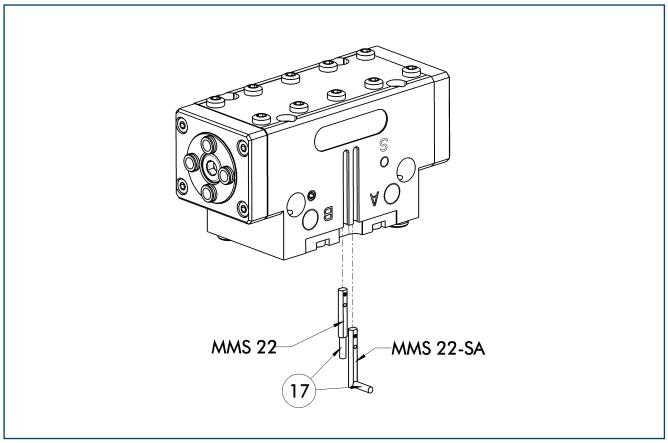


⑰ Cable outlet

End position monitoring for mounting in the C-slot

| Description | ID | Recommended product |
|---|---|---|
| Electronic magnetic switches | | |
| MMS 22-S-M5-PNP | **0301438** | |
| MMS 22-S-M5-NPN | **0301439** | |
| MMS 22-S-M8-PNP | **0301432** | • |
| MMS 22-S-M8-NPN | **0301433** | |
| MMSK 22-S-PNP | **0301434** | |
| MMSK 22-S-NPN | **0301435** | |
| Electronic magnetic switches with lateral cable outlet | | |
| MMS 22-S-M5-PNP-SA | **0301448** | |
| MMS 22-S-M5-NPN-SA | **0301449** | |
| MMS 22-S-M8-PNP-SA | **0301442** | • |
| MMS 22-S-M8-NPN-SA | **0301443** | |
| MMSK 22-S-PNP-SA | **0301444** | |
| MMSK 22-S-NPN-SA | **0301445** | |
| Reed Switches | | |
| RMS 22-S-M8 | **0377720** | • |
| Connection cables | | |
| KA BG05-L 3P-0300 | **0301652** | |
| KA BG08-L 3P-0300-PNP | **0301622** | |
| KA BG08-L 3P-0500-PNP | **0301623** | |
| KA BW05-L 3P-0300 | **0301650** | |
| KA BW08-L 3P-0300-NPN | **0301602** | |
| KA BW08-L 3P-0300-PNP | **0301594** | |
| KA BW08-L 3P-0500-NPN | **9641116** | |
| KA BW08-L 3P-0500-PNP | **0301502** | |
| Cable extensions | | |
| KV BW08-SG08 3P-0030-PNP | **0301495** | |
| KV BW08-SG08 3P-0100-PNP | **0301496** | |
| KV BW08-SG08 3P-0200-PNP | **0301497** | |

ⓘ Two sensors (closer/NO) are required for each gripper, plus extension cables as an option.

ⓘ Please note the minimum permitted bending radii for the sensor cables, which are generally 35 mm.

You can find more detailed information and individual parts of the above-mentioned accessories in the “Accessories” catalog section.

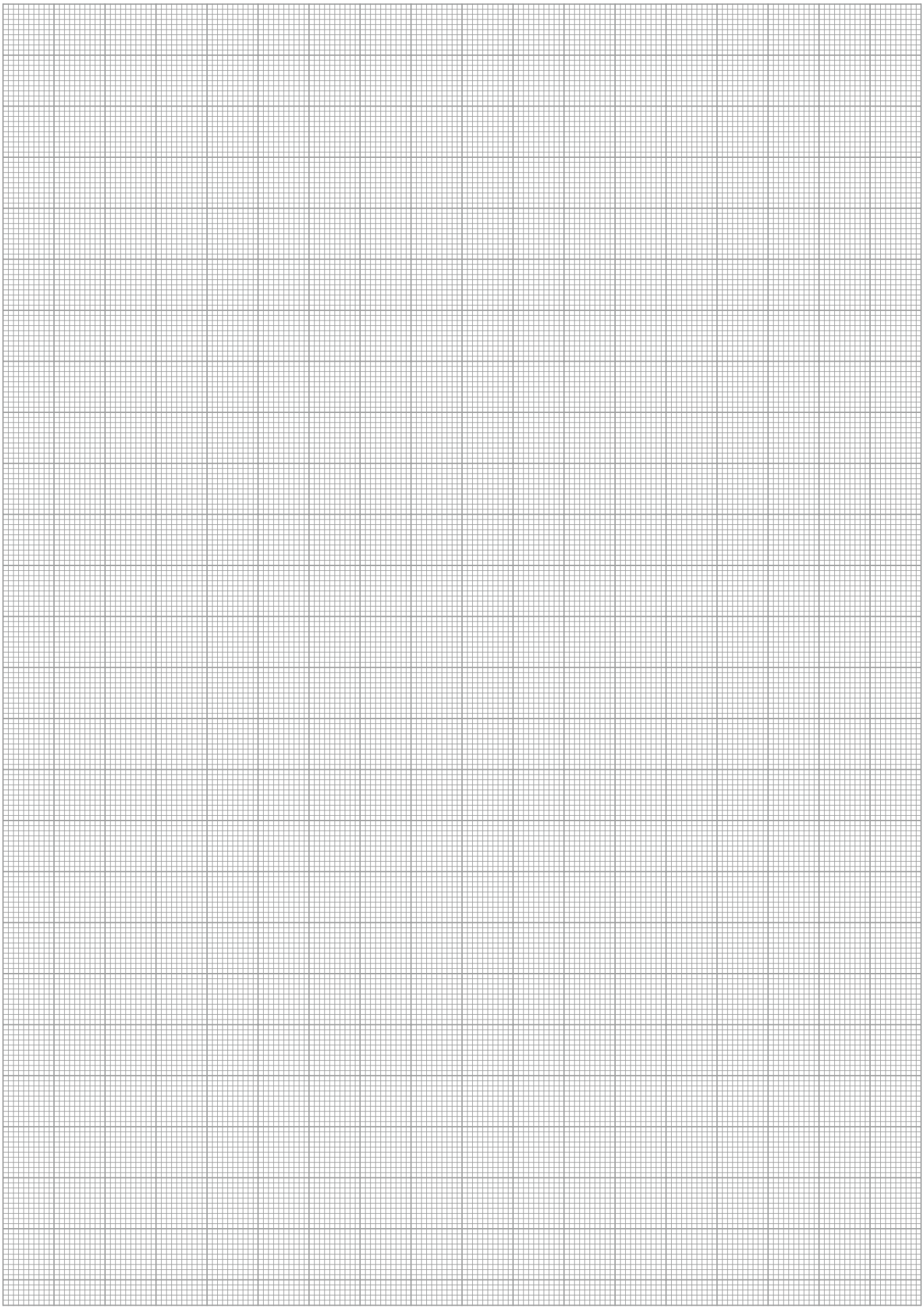

# DPG-plus 200

**Pneumatic • 2-Finger Parallel Gripper • Sealed Gripper**



## Gripping force, I.D. gripping

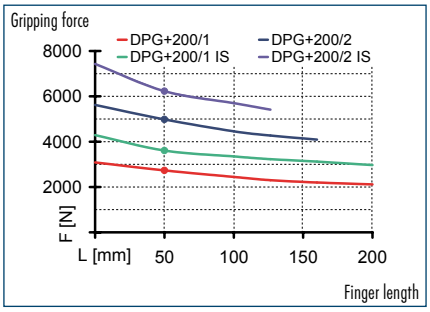


## Gripping force, O.D. gripping

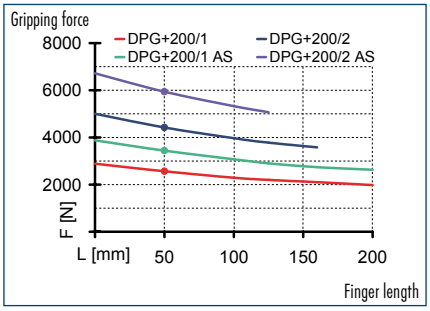


## Finger load

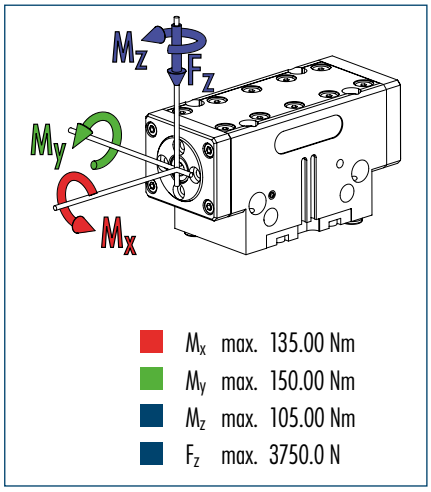


ⓘ The indicated moments and forces are static values, apply per base jaw and may occur simultaneously. $M_y$ may arise in addition to the moment generated by the gripping force itself. If the max. permitted finger weight is exceeded, it is imperative to throttle the air pressure so that the jaw movement occurs without any hitting or bouncing. Service life may be reduced.

## Technical data

| Description | | DPG-plus 200-1 | DPG-plus 200-2 | DPG-plus 200-1-AS | DPG-plus 200-2-AS | DPG-plus 200-1-IS | DPG-plus 200-2-IS |
|---|---|---|---|---|---|---|---|
| **ID** | | **0304361** | **0304362** | **0304363** | **0304364** | **0304365** | **0304366** |
| Stroke per finger | [mm] | 25 | 14 | 25 | 14 | 25 | 14 |
| Closing force | [N] | 2565 | 4420 | 3440 | 5940 | | |
| Opening force | [N] | 2730 | 4970 | | | 3605 | 6490 |
| Min. spring force | [N] | | | 875 | 1520 | 875 | 1520 |
| Weight | [kg] | 7.3 | 7.3 | 9.5 | 9.5 | 9.5 | 9.5 |
| Recommended workpiece weight | [kg] | 12.8 | 22.1 | 12.8 | 22.1 | 12.8 | 22.1 |
| Air consumption per double stroke | [cm³] | 390 | 390 | 635 | 635 | 635 | 635 |
| Min./max. operating pressure | [bar] | 2.5/8 | 2.5/8 | 4/6.5 | 4/6.5 | 4/6.5 | 4/6.5 |
| Nominal operating pressure | [bar] | 6 | 6 | 6 | 6 | 6 | 6 |
| Closing/opening time | [s] | 0.45/0.45 | 0.45/0.45 | 0.4/0.8 | 0.4/0.8 | 0.8/0.4 | 0.8/0.4 |
| Max. permitted finger length | [mm] | 200 | 160 | 200 | 125 | 160 | 125 |
| Max. permitted weight per finger | [kg] | 5.5 | 5.5 | 5.5 | 5.5 | 5.5 | 5.5 |
| IP class | | 67 | 67 | 67 | 67 | 67 | 67 |
| Min./max. ambient temperature | [°C] | -10/90 | -10/90 | -10/90 | -10/90 | -10/90 | -10/90 |
| Repeat accuracy | [mm] | 0.02 | 0.02 | 0.02 | 0.02 | 0.02 | 0.02 |
| Cleanroom class ISO-classification 14644-1 | | 5 | 5 | 5 | 5 | 5 | 5 |

ⓘ Please note that an additional hose for deaeration or air purge is essential for the gripper, i.e. it requires three hoses in total. See the assembly and operating manual for detailed information.

## Main view

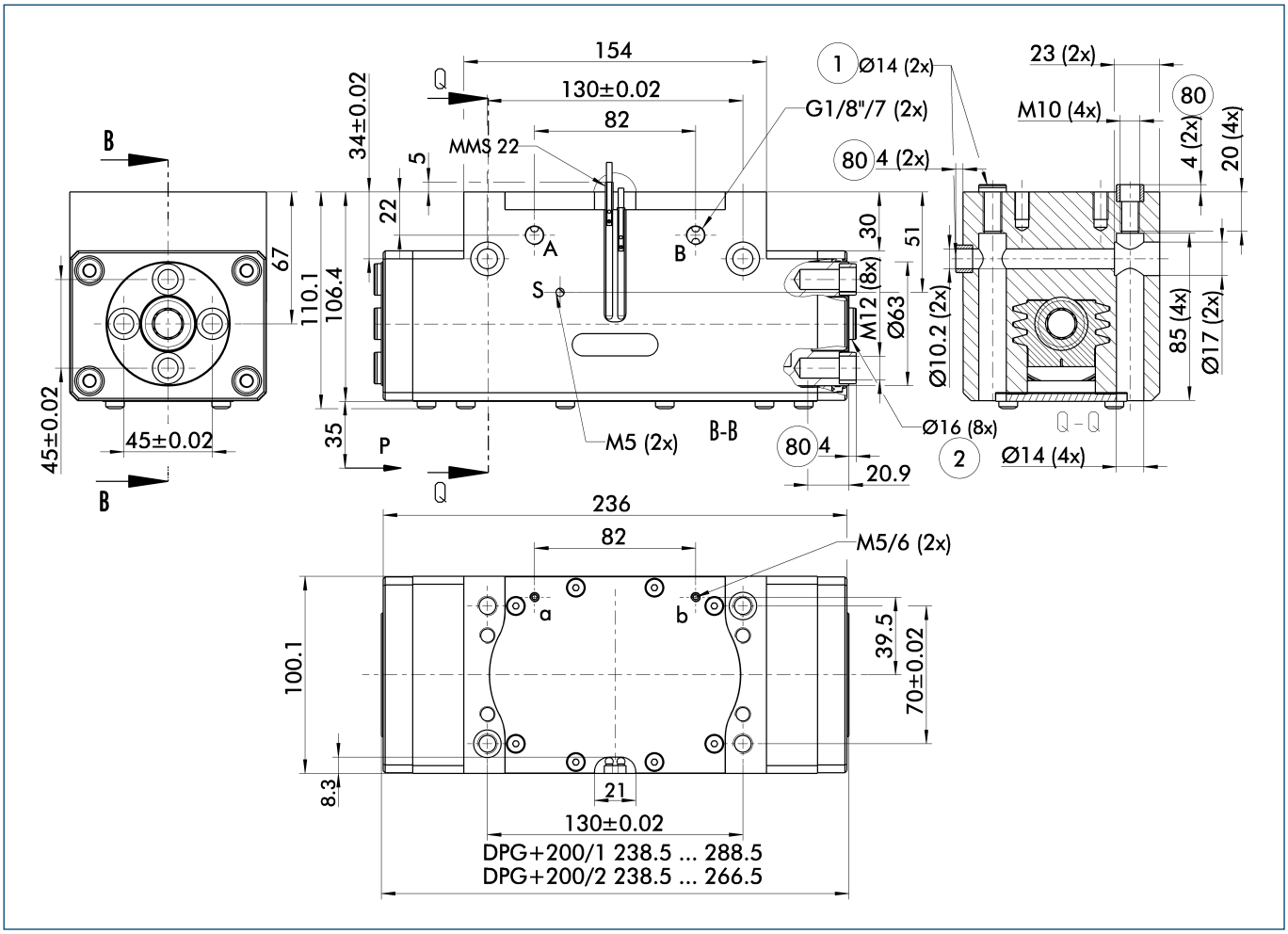


For finger connection, we recommend only to use two of the four centering bores for each finger. The drawing shows the gripper in the basic version with closed jaws, the dimensions do not include the options described below.

ⓘ The SDV-P pressure maintenance valve can be used as a gripping force maintenance device (see "Accessories" catalog section).

A, a Main/direct connection, gripper opening
B, b Main/direct connection, gripper closing
S Air purge connection
① Gripper connection
② Finger connection
(80) Depth of the centering sleeve hole in the matching part

## AS/IS gripping force maintenance device

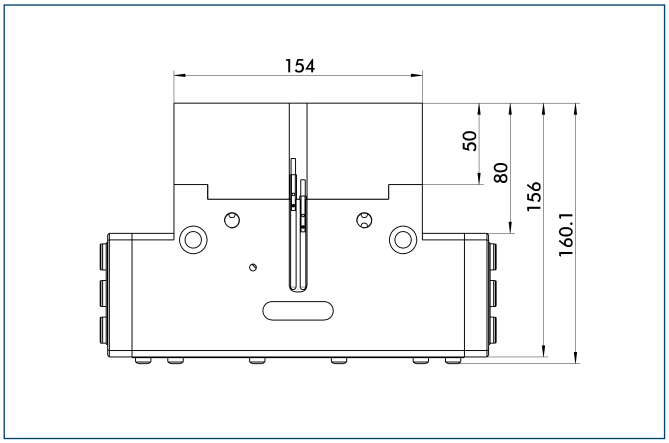


The mechanical gripping force maintenance device ensures a minimum gripping force even in case of pressure drop. This acts as closing force in the AS version, and as opening force in the IS version. In addition, the gripping force maintenance device can also be used for increasing the gripping force or for single-acting gripping.

## Proposed jaw design

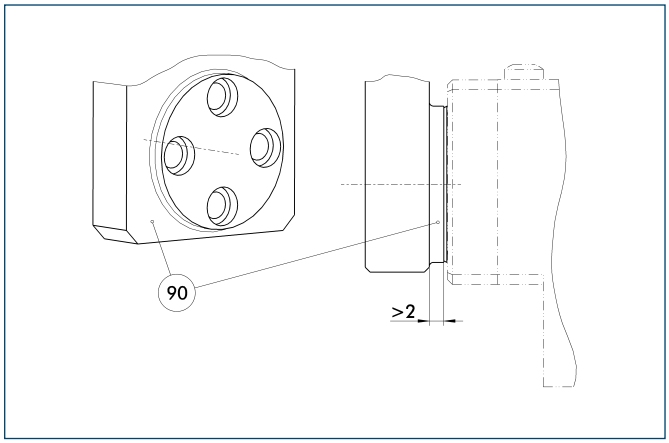


(90) Step

In order to avoid impairment of the stroke due to contamination or chips, there should be a sufficient distance between the top jaws and the gripper.

## Maximum permitted finger projection

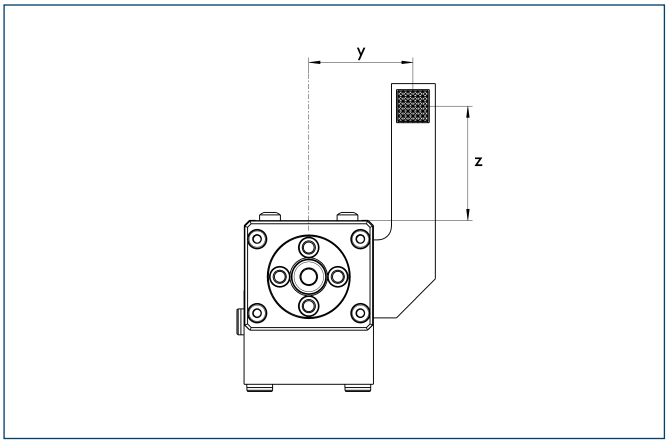


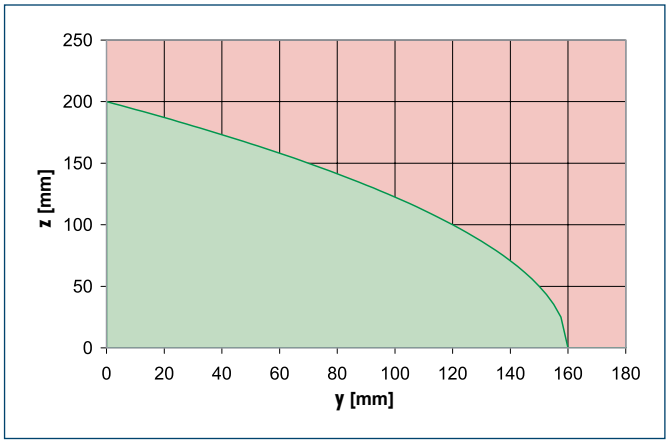


Permitted range
Inadmissible range

The curve applies to the basic version (stroke -1). For other versions, the curve will be parallel but offset in line with the max. permitted finger length.

## Tolerance compensation unit

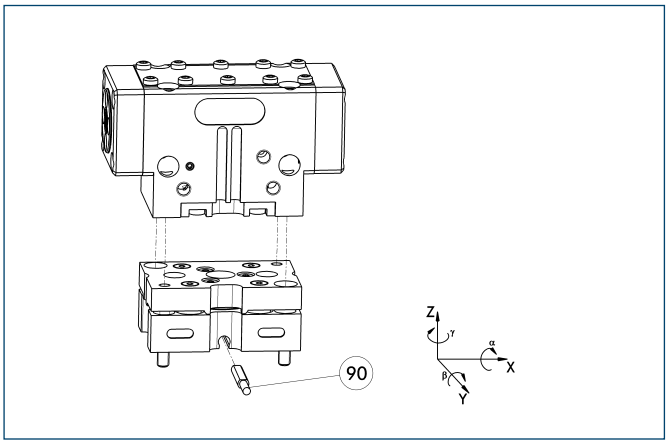


(90) Monitoring of locking

Grippers can be directly mounted without an adapter plate. Tolerance compensation unit and gripper have an identical screw connection diagram. Therefore the tolerance compensation units can be assembled later. Please consider the additional assembly height of the tolerance compensation unit. For details see catalog “Robot Accessories”.

| Description | ID | Locking | Deflection |
|---|---|---|---|
| Compensation unit | | | |
| TCU-200-3-MV-P | **0324864** | Yes | ±2°/±1°/±1.5° |
| TCU-200-3-OV-P | **0324865** | No | ±2°/±1°/±1.5° |

## Programmable magnetic switch

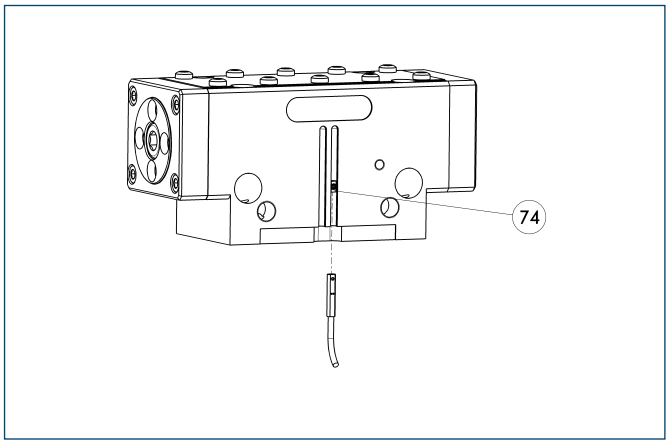


(74) Stop for MMS-P

Position monitoring with two programmable positions per sensor. The end position monitoring is mounted in the C-slot.

| Description | ID | Recommended product |
|---|---|---|
| Programmable magnetic switch | | |
| MMS-P 22-S-M8-PNP | **0301370** | • |
| MMSK-P 22-S-PNP | **0301371** | |
| Connection cables | | |
| KA BG08-L 4P-0500 | **0307767** | |
| KA BG08-L 4P-1000 | **0307768** | |
| KA BW08-L 4P-0500 | **0307765** | |
| KA BW08-L 4P-1000 | **0307766** | |
| Sensor Distributor | | |
| V2-M8-4P-2XM8-3P | **0301380** | |

ⓘ Please note the minimum permitted bending radii for the sensor cables, which are generally 35 mm.
ⓘ Per gripper one sensor (closer/NO) is required, optionally a cable extension.

You can find more detailed information and individual parts of the above-mentioned accessories in the “Accessories” catalog section.

## Electronic magnetic switches

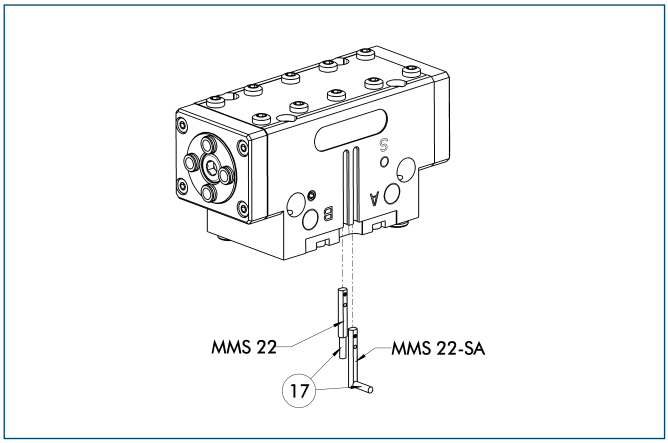


⑰ Cable outlet

End position monitoring for mounting in the C-slot

| Description | ID | Recommended product |
|---|---|---|
| Electronic magnetic switches | | |
| MMS 22-S-M5-PNP | **0301438** | |
| MMS 22-S-M5-NPN | **0301439** | |
| MMS 22-S-M8-PNP | **0301432** | • |
| MMS 22-S-M8-NPN | **0301433** | |
| MMSK 22-S-PNP | **0301434** | |
| MMSK 22-S-NPN | **0301435** | |
| Electronic magnetic switches with lateral cable outlet | | |
| MMS 22-S-M5-PNP-SA | **0301448** | |
| MMS 22-S-M5-NPN-SA | **0301449** | |
| MMS 22-S-M8-PNP-SA | **0301442** | • |
| MMS 22-S-M8-NPN-SA | **0301443** | |
| MMSK 22-S-PNP-SA | **0301444** | |
| MMSK 22-S-NPN-SA | **0301445** | |
| Reed Switches | | |
| RMS 22-S-M8 | **0377720** | • |
| Connection cables | | |
| KA BG05-L 3P-0300 | **0301652** | |
| KA BG08-L 3P-0300-PNP | **0301622** | |
| KA BG08-L 3P-0500-PNP | **0301623** | |
| KA BW05-L 3P-0300 | **0301650** | |
| KA BW08-L 3P-0300-NPN | **0301602** | |
| KA BW08-L 3P-0300-PNP | **0301594** | |
| KA BW08-L 3P-0500-NPN | **9641116** | |
| KA BW08-L 3P-0500-PNP | **0301502** | |
| Cable extensions | | |
| KV BW08-SG08 3P-0030-PNP | **0301495** | |
| KV BW08-SG08 3P-0100-PNP | **0301496** | |
| KV BW08-SG08 3P-0200-PNP | **0301497** | |

ⓘ Two sensors (closer/NO) are required for each gripper, plus extension cables as an option.

ⓘ Please note the minimum permitted bending radii for the sensor cables, which are generally 35 mm.

You can find more detailed information and individual parts of the above-mentioned accessories in the “Accessories” catalog section.

# PFH

**Pneumatic • 2-Finger Parallel Gripper • Long-stroke Gripper**

**Sizes**
30 ... 50

**Weight**
2.65 kg ... 12.6 kg

**Gripping force**
630 N ... 2950 N

**Stroke per finger**
30 mm ... 100 mm

**Workpiece weight**
3.15 kg ... 13 kg

## Application example

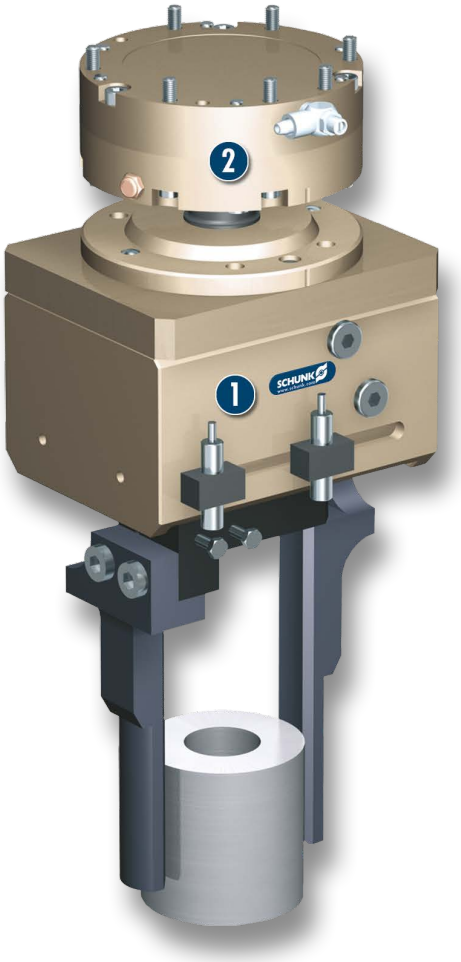


**Assembly unit for intermediate sleeves with various diameters. The unit is equipped with a collision protection device to prevent damages.**

1. **PFH 2-Finger Parallel Gripper with workpiece-specific gripper fingers**
2. **OPS collision and overload protection device**

## Long-stroke Gripper

2-Finger Parallel Gripper with large jaw stroke for large parts and/or a broad range of parts

## Field of application

clean to slightly dirty environments

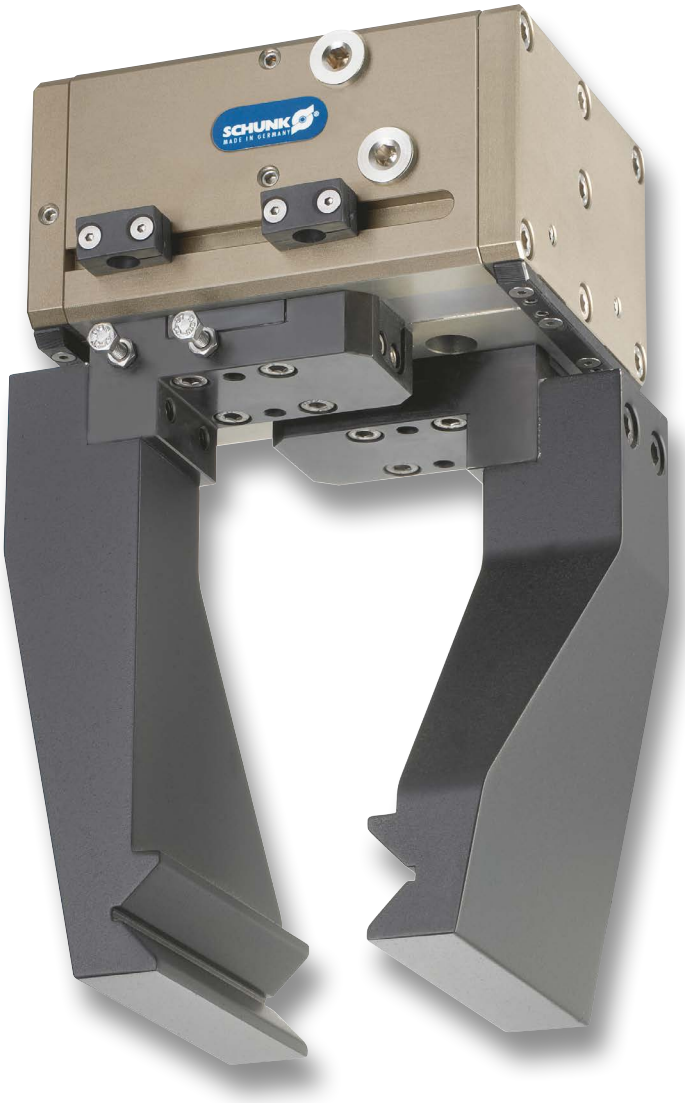


## Your advantages and benefits

**Robust guidance**
for the precise handling of all kinds of workpieces

**High maximum moments possible**
suitable for using long gripper fingers

**Double piston-rack-pinion principle**
for centric clamping

**Mounting from two sides in three screw directions possible**
for universal and flexible gripper assembly

**Air supply via hose-free direct connection or screw connections**
for the flexible supply of compressed air in all automation systems

## General note to the series

**Principle of function**
Double piston-rack-pinion principle

**Housing material**
Aluminum alloy, hard-anodized

**Base jaw material**
Steel

**Actuation**
pneumatic, with filtered compressed air (10 microns): dry, lubricated or non-lubricated
Pressure medium: Required quality class of compressed air according to DIN ISO 8573-1: 6 4 4

**Warranty**
24 months (details, general terms and conditions and operation manuals can be downloaded under www.schunk.com)

**Scope of delivery**
Brackets for proximity switches, centering sleeves, O-rings for direct connection, assembly and operating manual with manufacturer's declaration

**Gripping force maintenance device**
possible with SDV-P pressure maintenance valve

## Sectional diagram

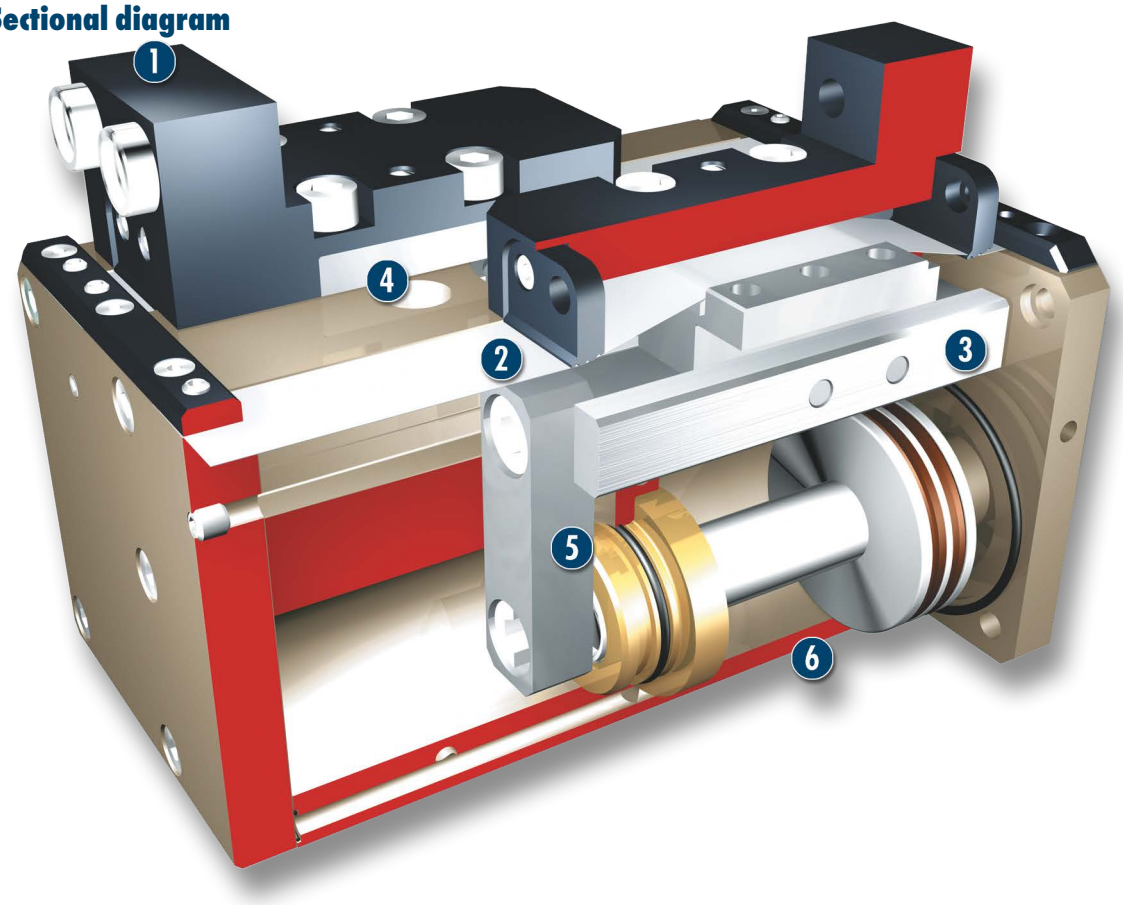


**1 Base jaw**
for the connection of workpiece-specific gripper fingers

**2 Dirt-cover**
along the whole guidance length against coarse dirt

**3 Guidance**
for precise gripping with minimal play at a high load capacity

**4 Centering and mounting possibilities**
for universal assembly of the gripper

**5 Kinematics**
Double piston-rack-pinion principle for centric spanning

**6 Housing**
weight-optimized through application of hard-anodized, high-strength aluminum alloy

## Functional description

By pressure actuation of the opposing piston, the base jaws, everyone is guided by a carrier on the piston, are set in motion.
The jaw stroke is synchronized by means of rack and pinion kinematics.

## Options and special information

### Gripper with guide cover

to protect against rough contamination. Gripper with double stroke is available as a special unit, however with the same gripping forces.

## Accessories

Accessories from SCHUNK – the suitable supplement for maximum functionality, reliability and performance of all automation modules.

### Centering sleeves



### Fittings



### Magnetic Switches



### Inductive proximity switches



### Plastic inserts





### Sensor cables



### Gripper pads

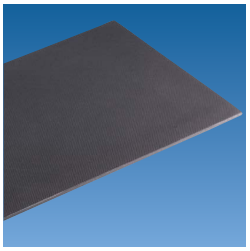

### Sensor Distributor

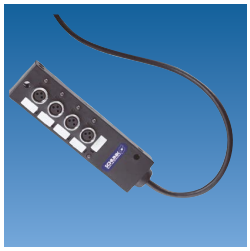

### Pressure maintenance valve



### Finger blanks



### Flexible Position Sensor

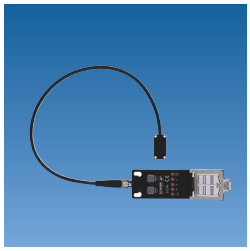

ⓘ For the exact size of the required accessories, availability of this size and the designation and ID, please refer to the additional views at the end of the size in question. You will find more detailed information on our accessory range in the “Accessories” catalog section.

## General note to the series

### Gripping force

is the arithmetic total of the gripping force applied to each finger at distance P (see illustration) measured from the upper edge of the gripper.

### Finger length

The finger length is measured from the upper edge of the gripper housing in the direction of the main axis.

### Repeat accuracy

is defined as the spread of the limit position after 100 consecutive strokes.

### Workpiece weight

The recommended workpiece weight is calculated for a force-type connection with a coefficient of friction of 0.1 and a safety factor of 2 against slippage of the workpiece on acceleration due to gravity g. Considerably heavier workpiece weights are permitted with form-fit gripping.

### Closing and opening times

Closing and opening times are purely the times that the base jaws or fingers are in motion. Valve switching times, hose filling times or PLC reaction times are not included in the above times and must be taken into consideration when determining cycle times.

# PFH 30

**Pneumatic • 2-Finger Parallel Gripper • Long-stroke Gripper**

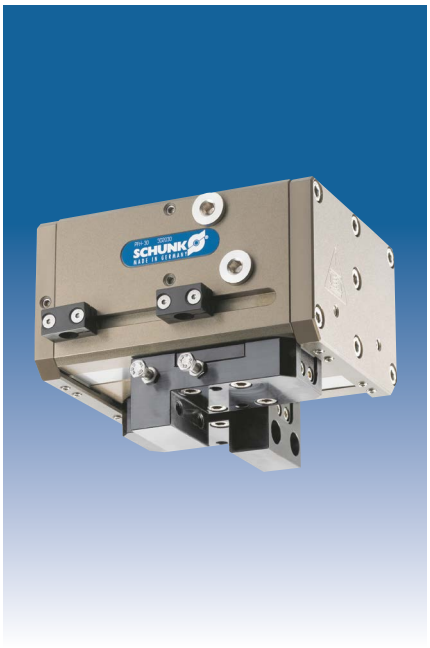

## Gripping force, I.D. gripping

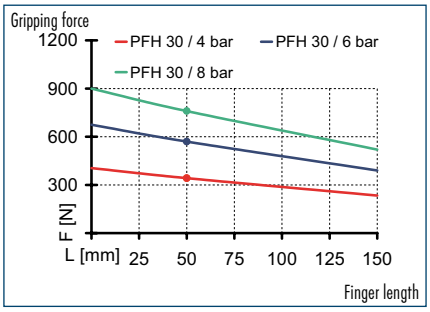


## Gripping force, O.D. gripping

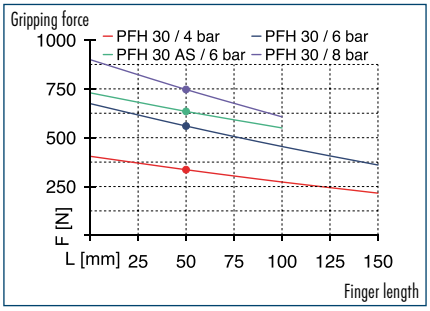


## Finger load

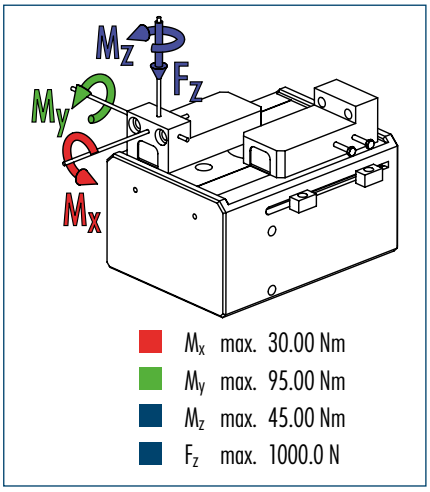


ⓘ The indicated moments and forces are static values, apply per base jaw and may occur simultaneously. $M_y$ may arise in addition to the moment generated by the gripping force itself. If the max. permitted finger weight is exceeded, it is imperative to throttle the air pressure so that the jaw movement occurs without any hitting or bouncing. Service life may be reduced.

## Technical data

| Description | | PFH 30 | PFH 30-60 | PFH 30-AS |
|---|---|---|---|---|
| ID | | 0302030 | 0302033 | 0302031 |
| Stroke per finger | [mm] | 30 | 60 | 30 |
| Closing force | [N] | 630 | 630 | 720 |
| Opening force | [N] | 570 | 570 | |
| Min. spring force | [N] | | | 90 |
| Weight | [kg] | 2.65 | 3.5 | 2.7 |
| Recommended workpiece weight | [kg] | 3.15 | 3.15 | 3.15 |
| Air consumption per double stroke | [cm³] | 95 | 187 | 95 |
| Min./max. operating pressure | [bar] | 2/8 | 2/8 | 5/6.5 |
| Nominal operating pressure | [bar] | 6 | 6 | 6 |
| Closing/opening time | [s] | 0.3/0.3 | 0.4/0.5 | 0.35/0.35 |
| Max. permitted finger length | [mm] | 150 | 150 | 100 |
| Max. permitted weight per finger | [kg] | 2 | 2 | 2 |
| IP class | | 41 | 41 | 41 |
| Min./max. ambient temperature | [°C] | -10/90 | -10/90 | -10/90 |
| Repeat accuracy | [mm] | 0.05 | 0.05 | 0.05 |

ⓘ Requirements to the evenness of the mounting face (relating to the total gripper connection surface) less than 0.02 mm at an edge length of up to 100 mm / more than 0.05 mm at an edge length of more than 100 mm.

## Main view

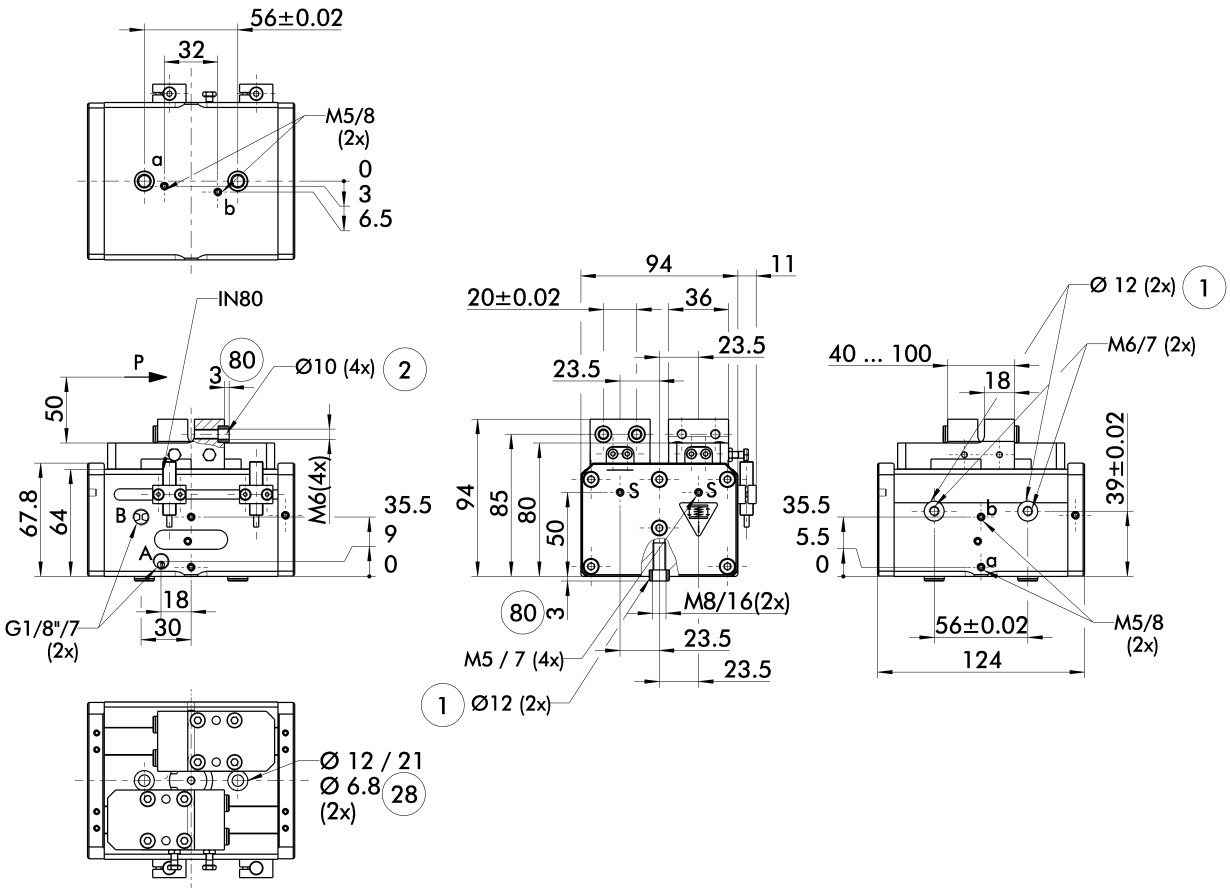


The drawing shows the gripper in the basic version with closed jaws, the dimensions do not include the options described below.

ⓘ The SDV-P pressure maintenance valve can also be used for I.D. or O.D. gripping alternatively or in addition to the spring-loaded, mechanical gripping force maintenance device (see "Accessories" catalog section).

A, a Main/direct connection, gripper opening
B, b Main/direct connection, gripper closing
S Air purge connection
① Gripper connection
② Finger connection
㉘ Through-bore
㉚ Depth of the centering sleeve hole in the matching part

## Stroke versions

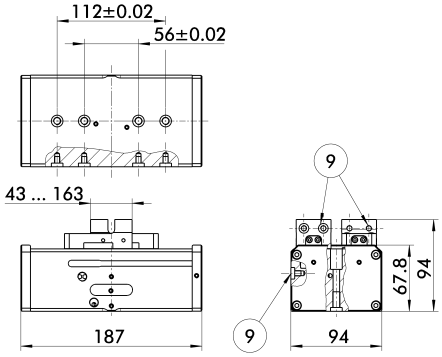


⑨ For mounting screw connection diagram, see basic version

The drawing shows changes in dimensions of the versions with a differing stroke compared to the main view of the shown version.

## Hose-free direct connection

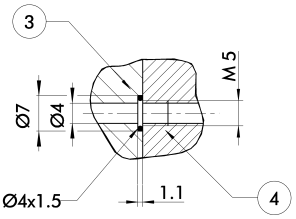


③ Adapter
④ Gripper

The direct connection is used for supplying compressed air without hoses. Instead, the pressure medium is fed through bore-holes in the mounting plate.

## Intermediate Jaws

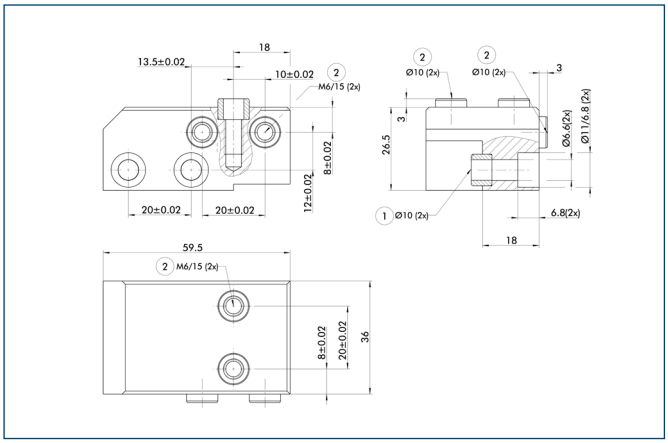


① Gripper connection
② Finger connection

Optionally intermediate jaws can be used, enabling direct connection and alignment of top jaws and various standard accessories in Z-direction.

| Description | ID | Material | Scope of delivery |
|---|---|---|---|
| Intermediate Jaws | | | |
| ZBA-PFH 30 | **0300220** | 16 MnCr 5 | 2 |

## Mounting kit for FPS

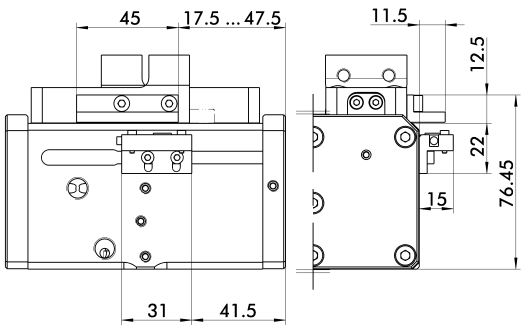


The FPS flexible position sensor can distinguish between five freely programmable ranges or switching points for the stroke of a gripper and can be used in conjunction with a PC as a measuring system.

| Description | ID |
|---|---|
| Mounting kit for FPS | |
| AS-PFH 30 | **0301733** |

You can find more detailed information and individual parts of the above-mentioned accessories in the “Accessories” catalog section.

## Inductive proximity switches

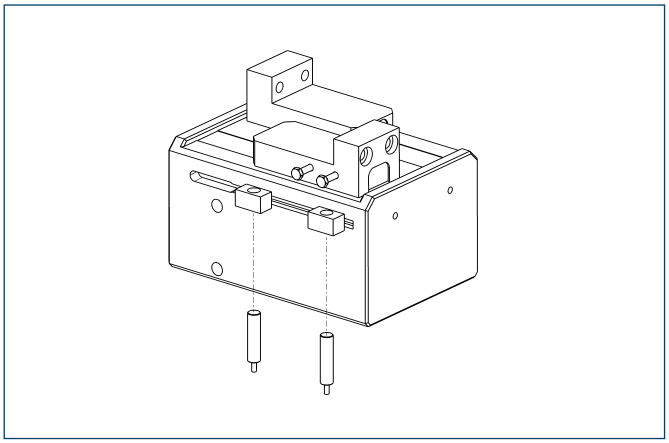

End position monitoring for direct mounting

| Description | ID | Recommended product |
|---|---|---|
| Inductive proximity switches | | |
| IN 80-S-M8 | **0301478** | • |
| IN 80-S-M12 | **0301578** | |
| INK 80-S | **0301550** | |
| Connection cables | | |
| KA BG08-L 3P-0300-PNP | **0301622** | |
| KA BG08-L 3P-0500-PNP | **0301623** | |
| KA BG12-L 3P-0500-PNP | **30016369** | |
| KA BW08-L 3P-0300-PNP | **0301594** | |
| KA BW08-L 3P-0500-PNP | **0301502** | |
| KA BW12-L 3P-0300-PNP | **0301503** | |
| KA BW12-L 3P-0500-PNP | **0301507** | |
| Cable extensions | | |
| KV BG12-SG12 3P-0030-PNP | **0301999** | |
| KV BG12-SG12 3P-0060-PNP | **0301998** | |
| KV BW08-SG08 3P-0030-PNP | **0301495** | |
| KV BW08-SG08 3P-0100-PNP | **0301496** | |
| KV BW08-SG08 3P-0200-PNP | **0301497** | |
| KV BW12-SG12 3P-0030-PNP | **0301595** | |
| KV BW12-SG12 3P-0100-PNP | **0301596** | |
| KV BW12-SG12 3P-0200-PNP | **0301597** | |

ⓘ Two sensors (closer/NO) are required for each gripper, plus extension cables as an option.

ⓘ Please note the minimum permitted bending radii for the sensor cables, which are generally 35 mm.

## Flexible Position Sensor

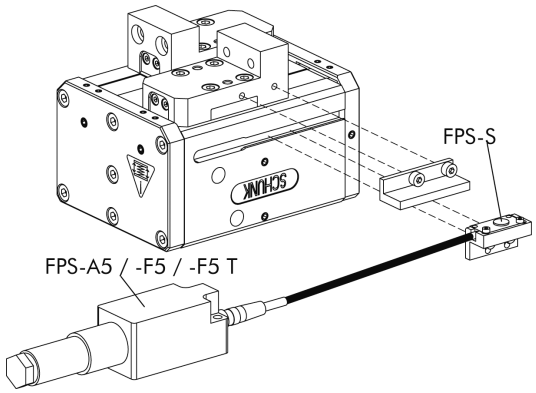


Flexible position monitoring of up to five positions

| Description | ID |
|---|---|
| Mounting kit for FPS | |
| AS-PFH 30 | **0301733** |
| Electronic Processor | |
| FPS-F5 | **0301805** |
| FPS-F5 T | **0301807** |
| Sensor | |
| FPS-S 13 | **0301705** |

ⓘ When using a FPS system, a FPS sensor (FPS-S) and a control unit (FPS-F5 / F5 T or A5) are required for each gripper as well as a mounting kit (AS), if listed. Cable extensions (KV) are available as options in the “Accessories” catalog section.

You can find more detailed information and individual parts of the above-mentioned accessories in the “Accessories” catalog section.

# PFH 40





## Gripping force, I.D. gripping

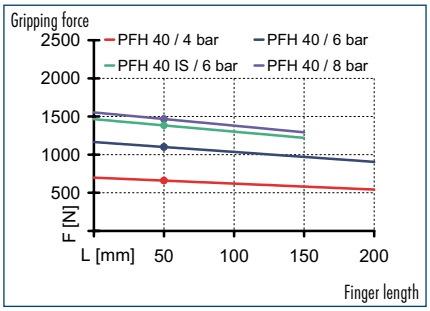


## Gripping force, O.D. gripping

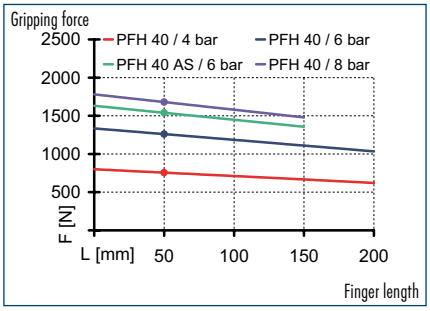


## Finger load

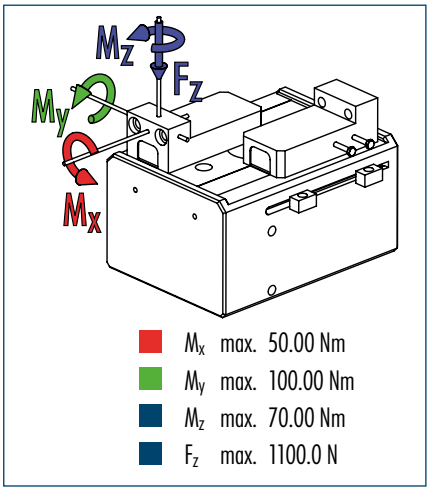


ⓘ The indicated moments and forces are static values, apply per base jaw and may occur simultaneously. $M_y$ may arise in addition to the moment generated by the gripping force itself. If the max. permitted finger weight is exceeded, it is imperative to throttle the air pressure so that the jaw movement occurs without any hitting or bouncing. Service life may be reduced.

## Technical data

| Description | | PFH 40 | PFH 40-80 | PFH 40-AS | PFH 40-IS |
|---|---|---|---|---|---|
| ID | | 0302040 | 0302043 | 0302041 | 0302042 |
| Stroke per finger | [mm] | 40 | 80 | 40 | 40 |
| Closing force | [N] | 1260 | 1260 | 1540 | |
| Opening force | [N] | 1100 | 1100 | | 1540 |
| Min. spring force | [N] | | | 280 | 280 |
| Weight | [kg] | 4.6 | 6.2 | 4.7 | 4.7 |
| Recommended workpiece weight | [kg] | 6.3 | 6.3 | 6.3 | 5.5 |
| Air consumption per double stroke | [cm³] | 245 | 487 | 245 | 245 |
| Min./max. operating pressure | [bar] | 2/8 | 2/8 | 5/6.5 | 5/6.5 |
| Nominal operating pressure | [bar] | 6 | 6 | 6 | 6 |
| Closing/opening time | [s] | 0.3/0.3 | 0.5/0.6 | 0.25/0.4 | 0.4/0.25 |
| Max. permitted finger length | [mm] | 200 | 200 | 150 | 150 |
| Max. permitted weight per finger | [kg] | 3 | 3 | 3 | 3 |
| IP class | | 41 | 41 | 41 | 41 |
| Min./max. ambient temperature | [°C] | -10/90 | -10/90 | -10/90 | -10/90 |
| Repeat accuracy | [mm] | 0.05 | 0.05 | 0.05 | 0.05 |

ⓘ Requirements to the evenness of the mounting face (relating to the total gripper connection surface) less than 0.02 mm at an edge length of up to 100 mm / more than 0.05 mm at an edge length of more than 100 mm.

## Main view

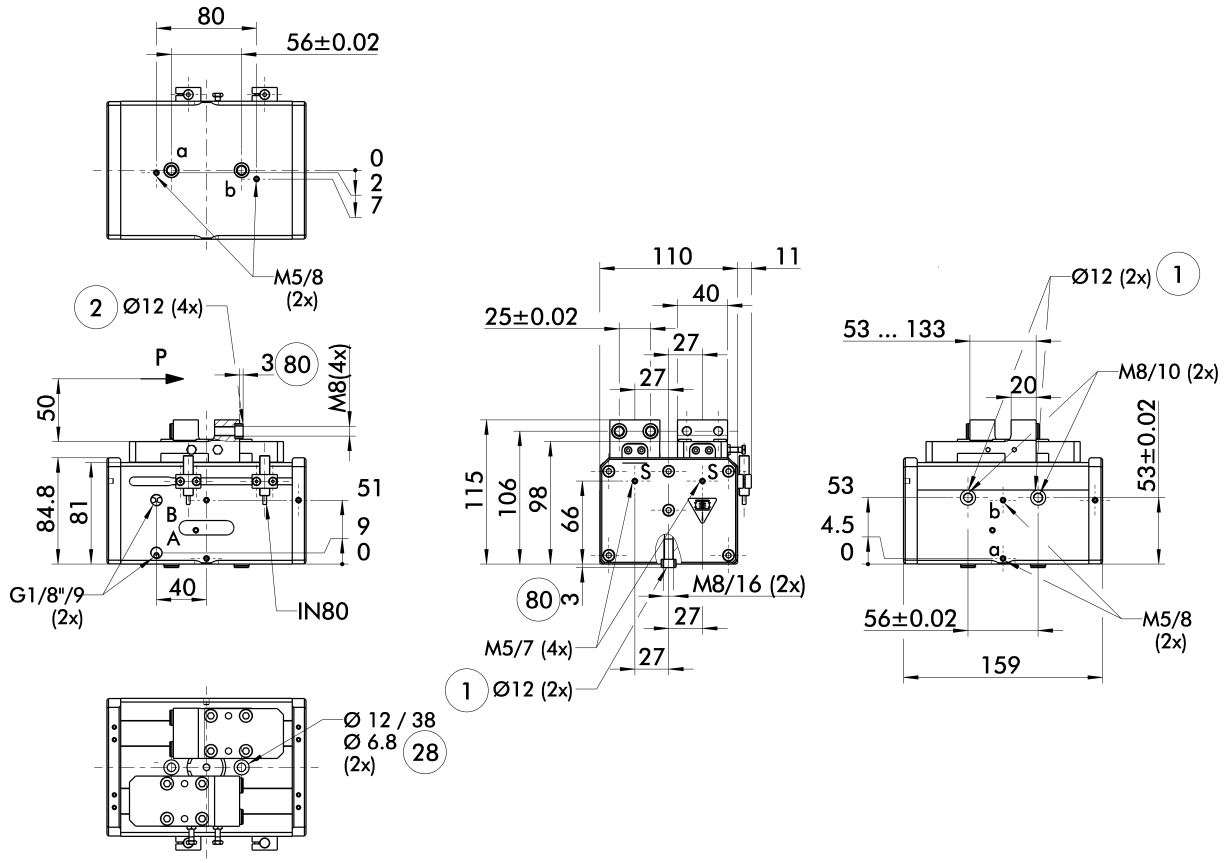


The drawing shows the gripper in the basic version with closed jaws, the dimensions do not include the options described below.

ⓘ The SDV-P pressure maintenance valve can also be used for I.D. or O.D. gripping alternatively or in addition to the spring-loaded, mechanical gripping force maintenance device (see "Accessories" catalog section).

A, a Main/direct connection, gripper opening
B, b Main/direct connection, gripper closing
S Air purge connection
① Gripper connection
② Finger connection
㉘ Through-bore
㉚ Depth of the centering sleeve hole in the matching part

## Stroke versions

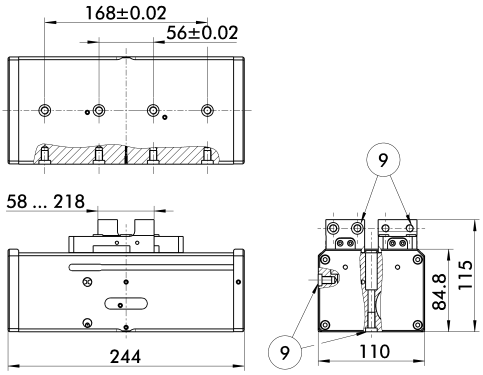


⑨ For mounting screw connection diagram, see basic version

The drawing shows changes in dimensions of the versions with a differing stroke compared to the main view of the shown version.

## Hose-free direct connection

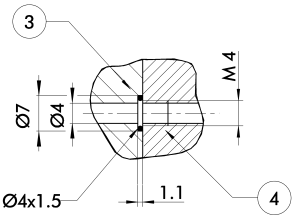


③ Adapter
④ Gripper

The direct connection is used for supplying compressed air without hoses. Instead, the pressure medium is fed through bore-holes in the mounting plate.

## Intermediate Jaws

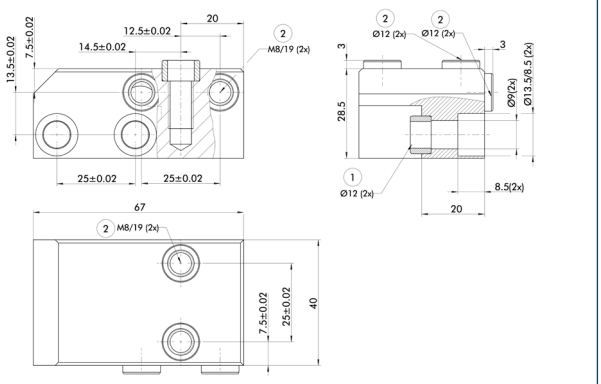


① Gripper connection
② Finger connection

Optionally intermediate jaws can be used, enabling direct connection and alignment of top jaws and various standard accessories in Z-direction.

| Description | ID | Material | Scope of delivery |
|---|---|---|---|
| Intermediate Jaws | | | |
| ZBA-PFH 40 | **0300221** | 16 MnCr 5 | 2 |

## Electronic magnetic switches

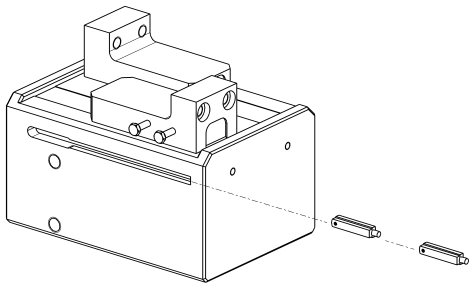

End position monitoring for mounting in the C-slot

| Description | ID | Recommended product |
|---|---|---|
| Electronic magnetic switches | | |
| MMS 30-S-M8-PNP | **0301471** | • |
| MMS 30-S-M12-PNP | **0301571** | |
| MMSK 30-S-PNP | **0301563** | |
| Connection cables | | |
| KA BG08-L 3P-0300-PNP | **0301622** | |
| KA BG08-L 3P-0500-PNP | **0301623** | |
| KA BG12-L 3P-0500-PNP | **30016369** | |
| KA BW08-L 3P-0300-PNP | **0301594** | |
| KA BW08-L 3P-0500-PNP | **0301502** | |
| Cable extensions | | |
| KV BG12-SG12 3P-0030-PNP | **0301999** | |
| KV BG12-SG12 3P-0060-PNP | **0301998** | |
| KV BW08-SG08 3P-0030-PNP | **0301495** | |
| KV BW08-SG08 3P-0100-PNP | **0301496** | |
| KV BW08-SG08 3P-0200-PNP | **0301497** | |
| KV BW12-SG12 3P-0030-PNP | **0301595** | |
| KV BW12-SG12 3P-0100-PNP | **0301596** | |
| KV BW12-SG12 3P-0200-PNP | **0301597** | |

ⓘ Two sensors (closer/NO) are required for each gripper, plus extension cables as an option.
ⓘ Please note the minimum permitted bending radii for the sensor cables, which are generally 35 mm.

You can find more detailed information and individual parts of the above-mentioned accessories in the “Accessories” catalog section.

## Inductive proximity switches

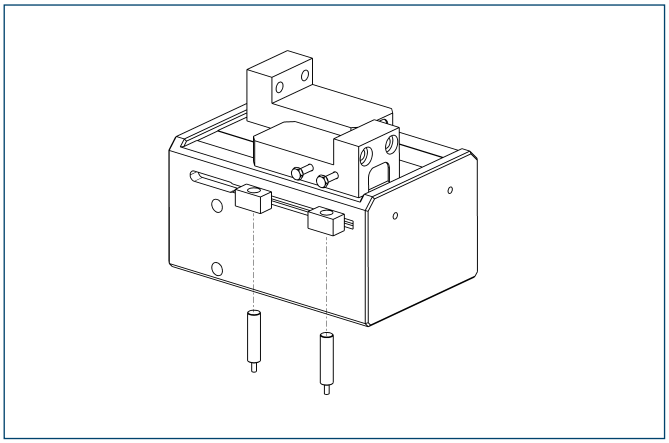

End position monitoring for direct mounting

| Description | ID | Recommended product |
|---|---|---|
| Inductive proximity switches | | |
| IN 80-S-M8 | **0301478** | • |
| IN 80-S-M12 | **0301578** | |
| INK 80-S | **0301550** | |
| Connection cables | | |
| KA BG08-L 3P-0300-PNP | **0301622** | |
| KA BG08-L 3P-0500-PNP | **0301623** | |
| KA BG12-L 3P-0500-PNP | **30016369** | |
| KA BW08-L 3P-0300-PNP | **0301594** | |
| KA BW08-L 3P-0500-PNP | **0301502** | |
| KA BW12-L 3P-0300-PNP | **0301503** | |
| KA BW12-L 3P-0500-PNP | **0301507** | |
| Cable extensions | | |
| KV BG12-SG12 3P-0030-PNP | **0301999** | |
| KV BG12-SG12 3P-0060-PNP | **0301998** | |
| KV BW08-SG08 3P-0030-PNP | **0301495** | |
| KV BW08-SG08 3P-0100-PNP | **0301496** | |
| KV BW08-SG08 3P-0200-PNP | **0301497** | |
| KV BW12-SG12 3P-0030-PNP | **0301595** | |
| KV BW12-SG12 3P-0100-PNP | **0301596** | |
| KV BW12-SG12 3P-0200-PNP | **0301597** | |

ⓘ Two sensors (closer/NO) are required for each gripper, plus extension cables as an option.

ⓘ Please note the minimum permitted bending radii for the sensor cables, which are generally 35 mm.

You can find more detailed information and individual parts of the above-mentioned accessories in the “Accessories” catalog section.

# PFH 50





## Gripping force, I.D. gripping

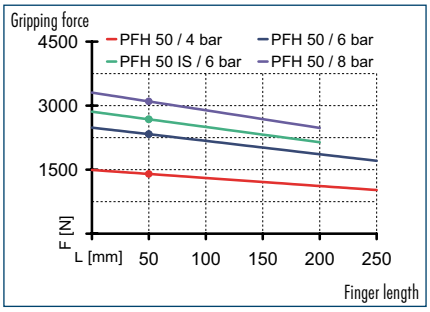


## Gripping force, O.D. gripping

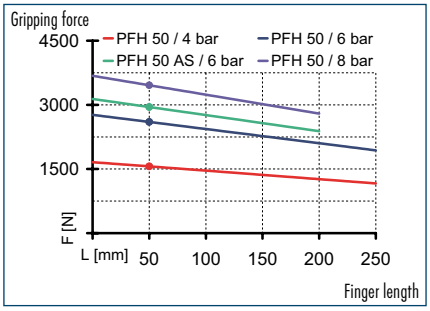


## Finger load

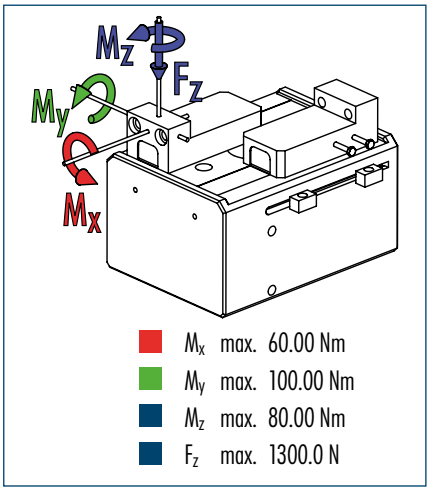


ⓘ The indicated moments and forces are static values, apply per base jaw and may occur simultaneously. $M_y$ may arise in addition to the moment generated by the gripping force itself. If the max. permitted finger weight is exceeded, it is imperative to throttle the air pressure so that the jaw movement occurs without any hitting or bouncing. Service life may be reduced.

## Technical data

| Description | | PFH 50 | PFH 50-100 | PFH 50-AS | PFH 50-IS |
|---|---|---|---|---|---|
| ID | | 0302050 | 0302053 | 0302051 | 0302052 |
| Stroke per finger | [mm] | 50 | 100 | 50 | 50 |
| Closing force | [N] | 2600 | 2600 | 2950 | |
| Opening force | [N] | 2330 | 2330 | | 2950 |
| Min. spring force | [N] | | | 350 | 350 |
| Weight | [kg] | 9.6 | 12.6 | 9.7 | 9.7 |
| Recommended workpiece weight | [kg] | 13 | 13 | 13 | 11.65 |
| Air consumption per double stroke | [cm³] | 603 | 1205 | 603 | 603 |
| Min./max. operating pressure | [bar] | 2/8 | 2/8 | 5/6.5 | 5/6.5 |
| Nominal operating pressure | [bar] | 6 | 6 | 6 | 6 |
| Closing/opening time | [s] | 0.6/0.7 | 1/1.2 | 0.5/0.8 | 0.7/0.6 |
| Max. permitted finger length | [mm] | 250 | 250 | 200 | 200 |
| Max. permitted weight per finger | [kg] | 4 | 4 | 4 | 4 |
| IP class | | 41 | 41 | 41 | 41 |
| Min./max. ambient temperature | [°C] | -10/90 | -10/90 | -10/90 | -10/90 |
| Repeat accuracy | [mm] | 0.05 | 0.05 | 0.05 | 0.05 |

ⓘ Requirements to the evenness of the mounting face (relating to the total gripper connection surface) less than 0.02 mm at an edge length of up to 100 mm / more than 0.05 mm at an edge length of more than 100 mm.

## Main view

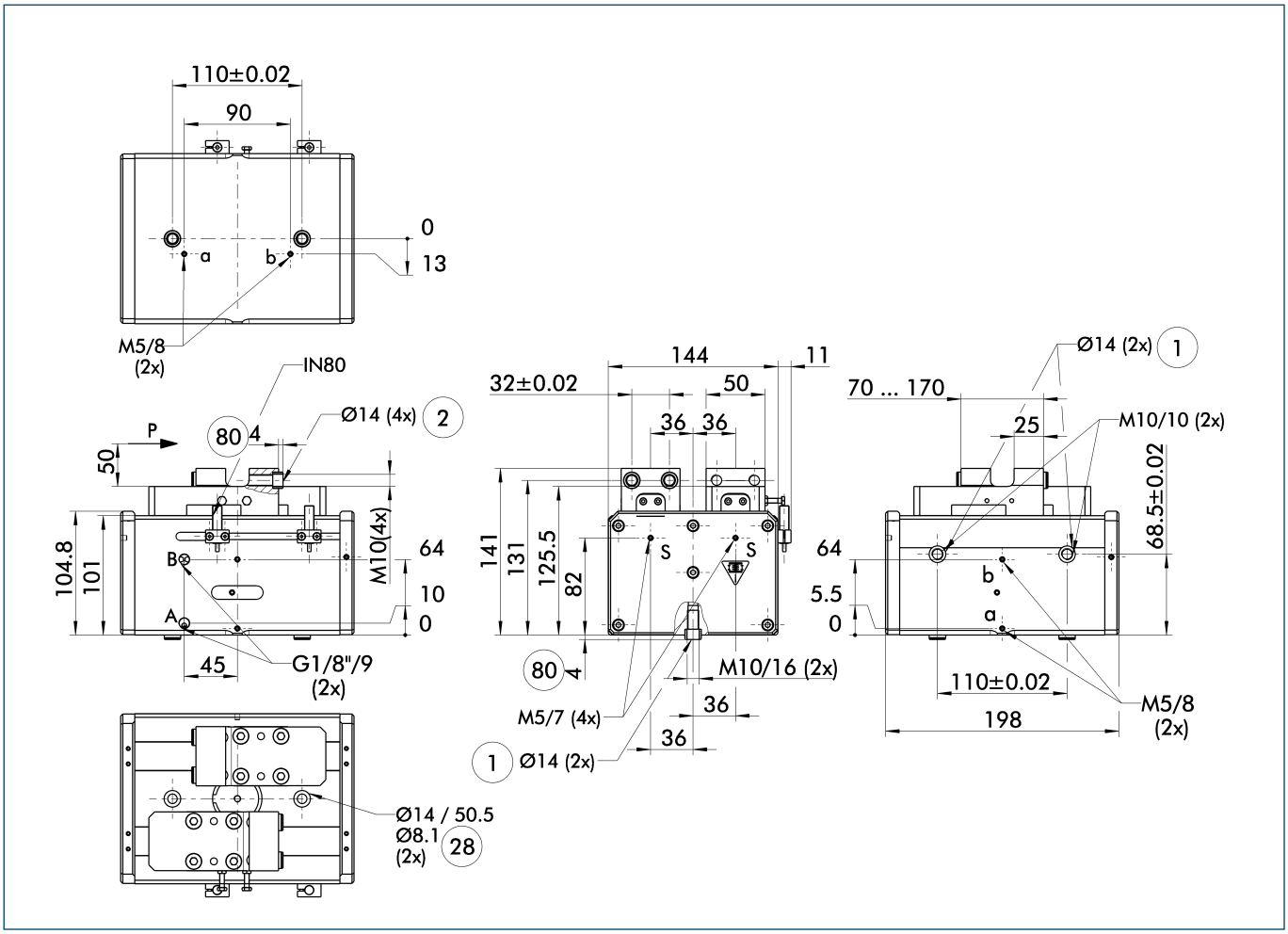


The drawing shows the gripper in the basic version with closed jaws, the dimensions do not include the options described below.

ⓘ The SDV-P pressure maintenance valve can also be used for I.D. or O.D. gripping alternatively or in addition to the spring-loaded, mechanical gripping force maintenance device (see "Accessories" catalog section).

A, a Main/direct connection, gripper opening
B, b Main/direct connection, gripper closing
S Air purge connection
① Gripper connection
② Finger connection
㉘ Through-bore
㉚ Depth of the centering sleeve hole in the matching part

## Stroke versions

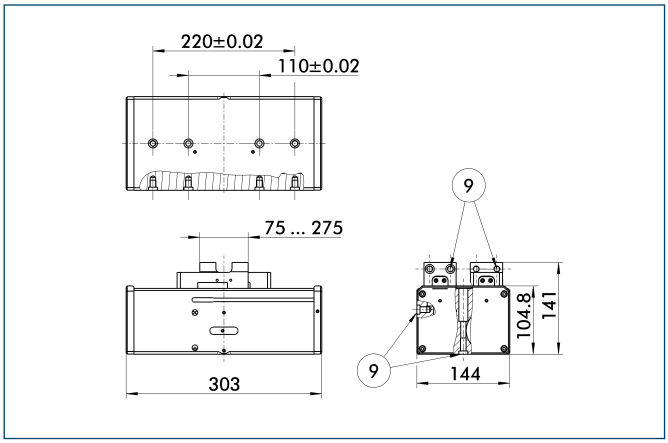


⑨ For mounting screw connection diagram, see basic version

The drawing shows changes in dimensions of the versions with a differing stroke compared to the main view of the shown version.

## Hose-free direct connection

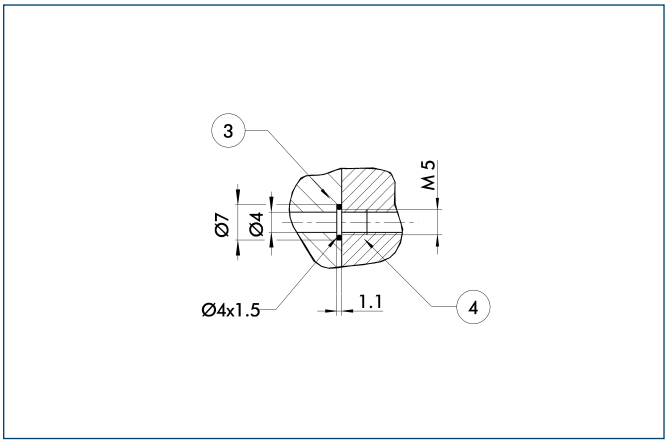


③ Adapter
④ Gripper

The direct connection is used for supplying compressed air without hoses. Instead, the pressure medium is fed through bore-holes in the mounting plate.

## Intermediate Jaws

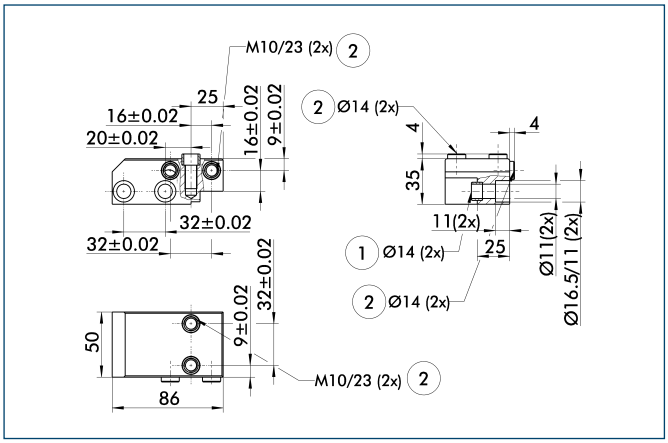


① Gripper connection
② Finger connection

Optionally intermediate jaws can be used, enabling direct connection and alignment of top jaws and various standard accessories in Z-direction.

| Description | ID | Material | Scope of delivery |
|---|---|---|---|
| Intermediate Jaws | | | |
| ZBA-PFH 50 | **0300222** | 16 MnCr 5 | 2 |

## Electronic magnetic switches

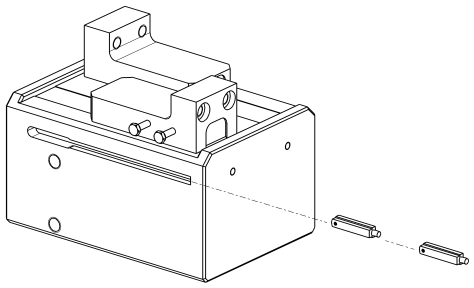

End position monitoring for mounting in the C-slot

| Description | ID | Recommended product |
|---|---|---|
| Electronic magnetic switches | | |
| MMS 30-S-M8-PNP | **0301471** | • |
| MMS 30-S-M12-PNP | **0301571** | |
| MMSK 30-S-PNP | **0301563** | |
| Connection cables | | |
| KA BG08-L 3P-0300-PNP | **0301622** | |
| KA BG08-L 3P-0500-PNP | **0301623** | |
| KA BG12-L 3P-0500-PNP | **30016369** | |
| KA BW08-L 3P-0300-PNP | **0301594** | |
| KA BW08-L 3P-0500-PNP | **0301502** | |
| Cable extensions | | |
| KV BG12-SG12 3P-0030-PNP | **0301999** | |
| KV BG12-SG12 3P-0060-PNP | **0301998** | |
| KV BW08-SG08 3P-0030-PNP | **0301495** | |
| KV BW08-SG08 3P-0100-PNP | **0301496** | |
| KV BW08-SG08 3P-0200-PNP | **0301497** | |
| KV BW12-SG12 3P-0030-PNP | **0301595** | |
| KV BW12-SG12 3P-0100-PNP | **0301596** | |
| KV BW12-SG12 3P-0200-PNP | **0301597** | |

ⓘ Two sensors (closer/NO) are required for each gripper, plus extension cables as an option.
ⓘ Please note the minimum permitted bending radii for the sensor cables, which are generally 35 mm.

You can find more detailed information and individual parts of the above-mentioned accessories in the “Accessories” catalog section.

## Inductive proximity switches

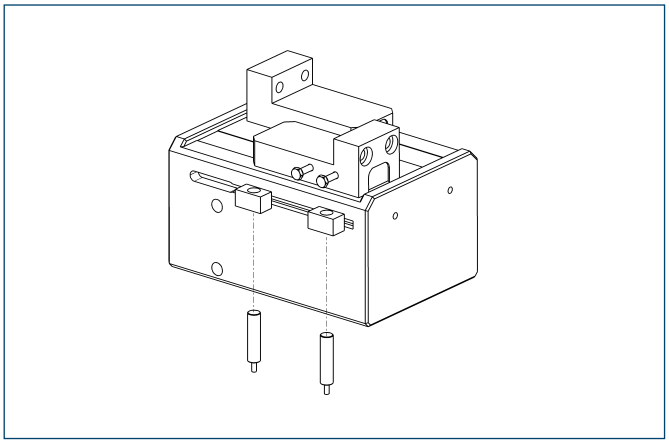

End position monitoring for direct mounting

| Description | ID | Recommended product |
|---|---|---|
| Inductive proximity switches | | |
| IN 80-S-M8 | **0301478** | • |
| IN 80-S-M12 | **0301578** | |
| INK 80-S | **0301550** | |
| Connection cables | | |
| KA BG08-L 3P-0300-PNP | **0301622** | |
| KA BG08-L 3P-0500-PNP | **0301623** | |
| KA BG12-L 3P-0500-PNP | **30016369** | |
| KA BW08-L 3P-0300-PNP | **0301594** | |
| KA BW08-L 3P-0500-PNP | **0301502** | |
| KA BW12-L 3P-0300-PNP | **0301503** | |
| KA BW12-L 3P-0500-PNP | **0301507** | |
| Cable extensions | | |
| KV BG12-SG12 3P-0030-PNP | **0301999** | |
| KV BG12-SG12 3P-0060-PNP | **0301998** | |
| KV BW08-SG08 3P-0030-PNP | **0301495** | |
| KV BW08-SG08 3P-0100-PNP | **0301496** | |
| KV BW08-SG08 3P-0200-PNP | **0301497** | |
| KV BW12-SG12 3P-0030-PNP | **0301595** | |
| KV BW12-SG12 3P-0100-PNP | **0301596** | |
| KV BW12-SG12 3P-0200-PNP | **0301597** | |

ⓘ Two sensors (closer/NO) are required for each gripper, plus extension cables as an option.

ⓘ Please note the minimum permitted bending radii for the sensor cables, which are generally 35 mm.

You can find more detailed information and individual parts of the above-mentioned accessories in the “Accessories” catalog section.

# PFH



**Sizes**
150 ... 300

**Weight**
18.9 kg ... 33.6 kg

**Gripping force**
2200 N

**Stroke per finger**
150 mm ... 300 mm

**Workpiece weight**
14.7 kg

## Application example

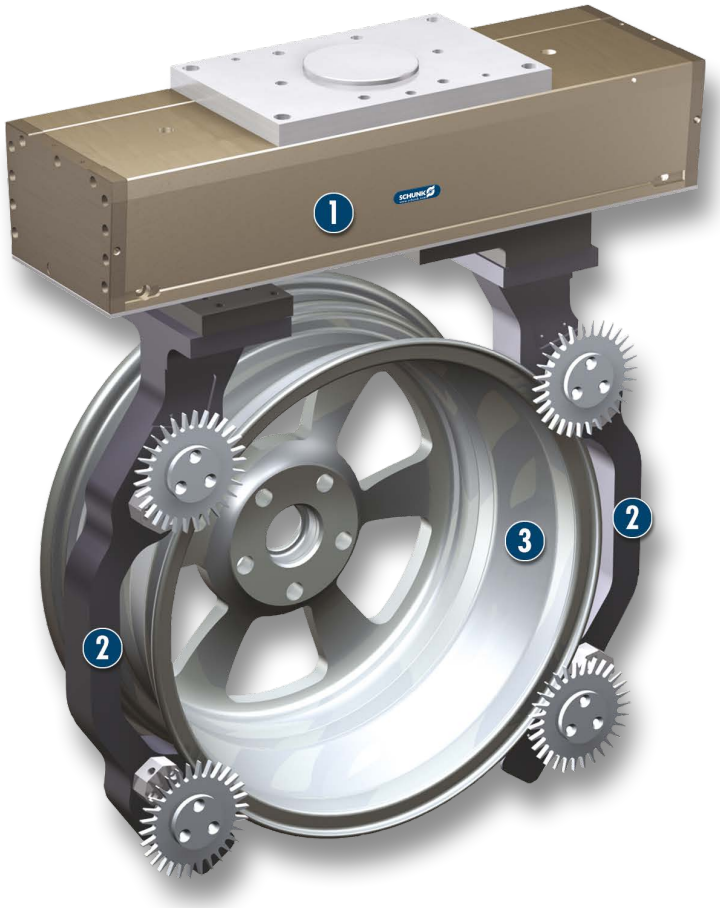


Gripper unit for handling car and truck rims. Special fingers enable process reliable gripping of pre-machined and finished parts.

1. 2-Finger Long-stroke Gripper PFH
2. Special fingers for wheel rim handling
3. Workpiece: 19 inch wheel rim

## Long-stroke Gripper

2-Finger Parallel Gripper with large jaw stroke for large parts and/or a broad range of parts

## Field of application

clean to slightly dirty working environments, especially suitable for the handling of car rims

## Your advantages and benefits

**Robust guidance**
for the precise handling of all kinds of workpieces

**High maximum moments possible**
suitable for using long gripper fingers

**Double piston-rack-pinion principle**
for centric clamping

**Mounting from two sides in three screw directions possible**
for universal and flexible gripper assembly

**Air supply via hose-free direct connection or screw connections**
for the flexible supply of compressed air in all automation systems



## General note to the series

**Principle of function**
Double piston-rack-pinion principle

**Housing material**
Aluminum alloy, hard-anodized

**Base jaw material**
Steel

**Actuation**
pneumatic, with filtered compressed air (10 microns): dry, lubricated or non-lubricated
Pressure medium: Required quality class of compressed air according to DIN ISO 8573-1: 6 4 4

**Warranty**
24 months (details, general terms and conditions and operation manuals can be downloaded under www.schunk.com)

**Scope of delivery**
Brackets for proximity switches, centering sleeves, O-rings for direct connection, assembly and operating manual with manufacturer's declaration

**Gripping force maintenance device**
possible with SDV-P pressure maintenance valve

## Sectional diagram

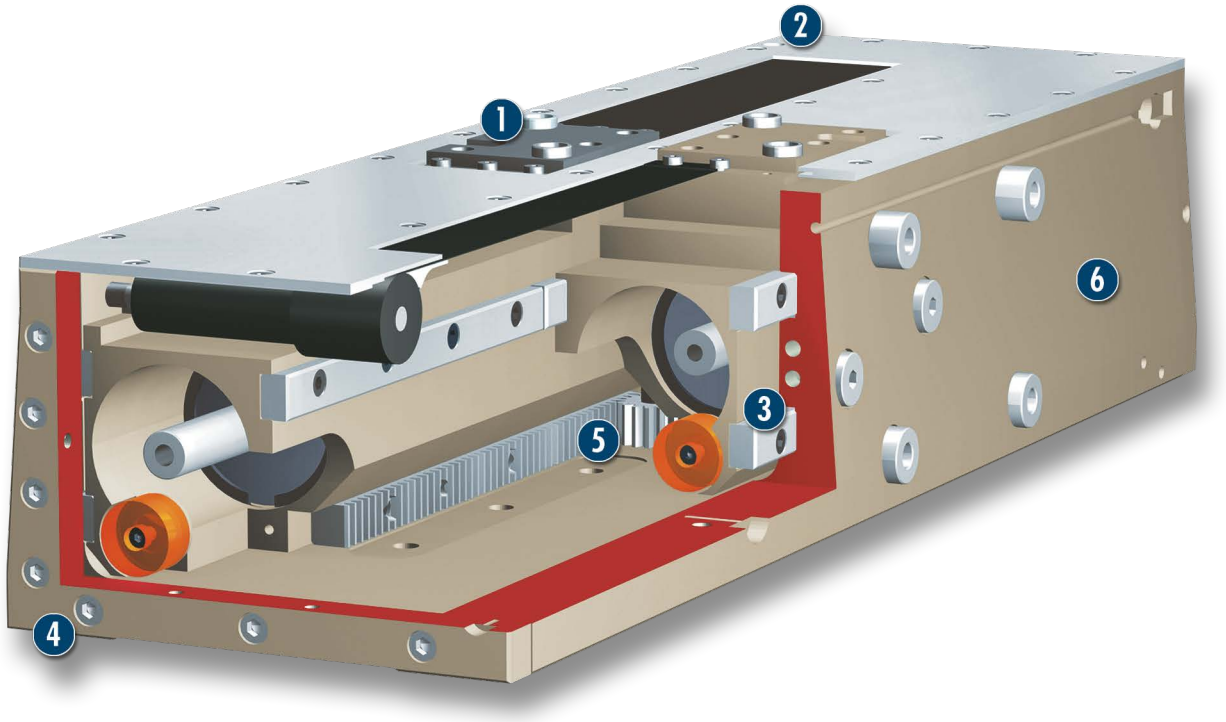


**1 Base jaw**
for the connection of workpiece-specific gripper fingers

**2 Dirt-cover**
along the whole guidance length against coarse dirt

**3 Guidance**
for precise gripping with minimal play at a high load capacity

**4 Centering and mounting possibilities**
for universal assembly of the gripper

**5 Kinematics**
Double piston-rack-pinion principle for centric spanning

**6 Housing**
sturdy, one-piece U-section

## Functional description

The base jaws form the piston areas, while the pistons themselves are fixed. By pressure actuating each opposing piston area, the base jaws set in motion. The end of the stroke is dampened with an elastomer pad.

## Options and special information

The gripper was specially developed for handling car rims. It is capable of gripping rims from 13" bis 21", but can also be used for handling other large workpieces. Units with manual stroke adjustment and versions with shorter and longer strokes are available on request.

## Accessories

Accessories from SCHUNK – the suitable supplement for maximum functionality, reliability and performance of all automation modules.

### Centering sleeves



### Fittings



### Magnetic Switches



### Inductive proximity switches



### Plastic inserts





### Sensor cables



### Gripper pads

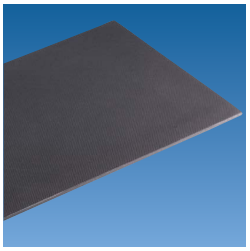

### Sensor Distributor

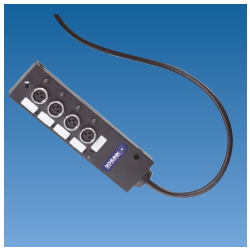

### Pressure maintenance valve



ⓘ For the exact size of the required accessories, availability of this size and the designation and ID, please refer to the additional views at the end of the size in question. You will find more detailed information on our accessory range in the “Accessories” catalog section.

## General note to the series

### Gripping force

is the arithmetic total of the gripping force applied to each finger at distance P (see illustration) measured from the upper edge of the gripper.

### Finger length

The finger length is measured from the upper edge of the gripper housing in the direction of the main axis.

### Repeat accuracy

is defined as the spread of the limit position after 100 consecutive strokes.

### Workpiece weight

The recommended workpiece weight is calculated for a force-type connection with a coefficient of friction of 0.1 and a safety factor of 2 against slippage of the workpiece on acceleration due to gravity g. Considerably heavier workpiece weights are permitted with form-fit gripping.

### Closing and opening times

Closing and opening times are purely the times that the base jaws or fingers are in motion. Valve switching times, hose filling times or PLC reaction times are not included in the above times and must be taken into consideration when determining cycle times.

# PFH 150

**Pneumatic • 2-Finger Parallel Gripper • Long-stroke Gripper**



## Gripping force

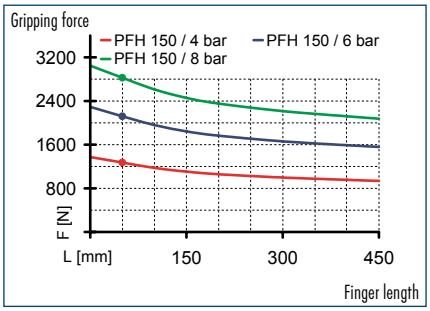


## Finger load

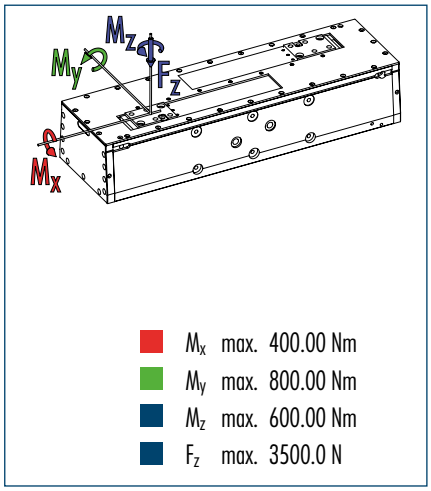


ⓘ The indicated moments and forces are static values, apply per base jaw and may occur simultaneously. $M_y$ may arise in addition to the moment generated by the gripping force itself. If the max. permitted finger weight is exceeded, it is imperative to throttle the air pressure so that the jaw movement occurs without any hitting or bouncing. Service life may be reduced.

## Technical data

| Description | | PFH 150 |
|---|---|---|
| **ID** | | **0302000** |
| Stroke per finger | [mm] | 150 |
| Closing force | [N] | 2200 |
| Opening force | [N] | 2200 |
| Weight | [kg] | 18.9 |
| Recommended workpiece weight | [kg] | 14.7 |
| Air consumption per double stroke | [cm³] | 1510 |
| Min./max. operating pressure | [bar] | 2/8 |
| Nominal operating pressure | [bar] | 6 |
| Closing/opening time | [s] | 0.7/0.7 |
| Max. permitted finger length | [mm] | 450 |
| Max. permitted weight per finger | [kg] | 7 |
| IP class | | 30 |
| Min./max. ambient temperature | [°C] | -10/90 |
| Repeat accuracy | [mm] | 0.02 |

ⓘ Requirements to the evenness of the mounting face (relating to the total gripper connection surface) less than 0.02 mm at an edge length of up to 100 mm / more than 0.05 mm at an edge length of more than 100 mm.

## Main view

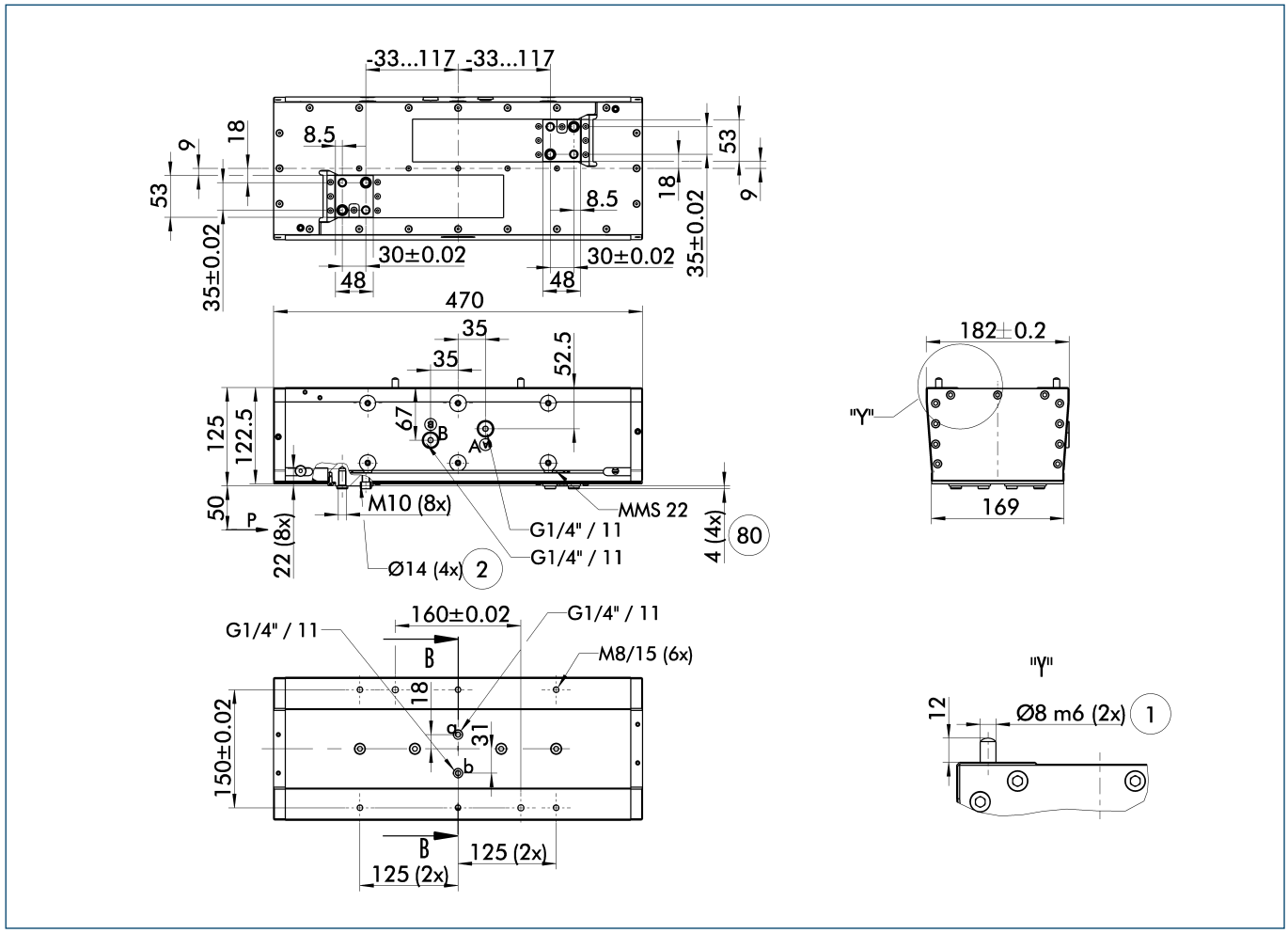


The drawing shows the gripper in the basic version with opened jaws without considering the dimensions of the described options below.

ⓘ The SDV-P pressure maintenance valve can also be used for I.D. or O.D. gripping alternatively or in addition to the spring-loaded, mechanical gripping force maintenance device (see "Accessories" catalog section).

A, a Main/direct connection, gripper opening
B, b Main/direct connection, gripper closing
① Gripper connection
② Finger connection
80 Depth of the centering sleeve hole in the matching part

## Hose-free direct connection

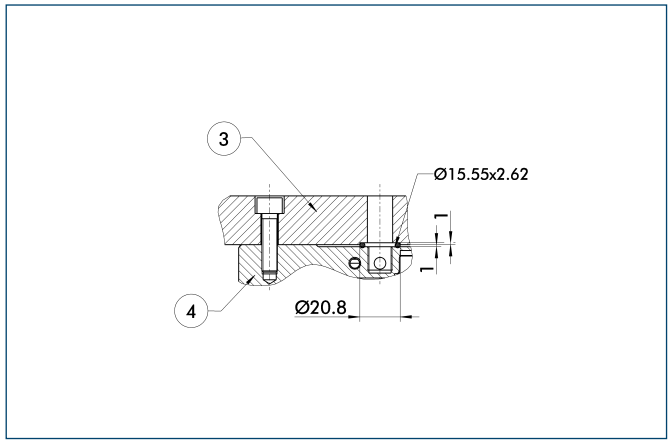


③ Adapter
④ Gripper

The direct connection is used for supplying compressed air without hoses. Instead, the pressure medium is fed through bore-holes in the mounting plate.

## Mounting kit for side mount

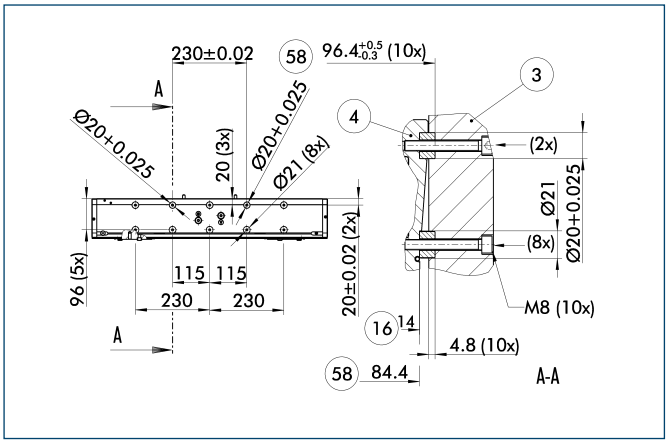


③ Adapter
④ Gripper
⑯ Max. depth of engagement
⑱ Distance from center of gripper

The mounting kit for side mount enables parallel and centric fastening at the side surface.

| Description | ID |
|---|---|
| Mounting kit for side mount | |
| AS-S PFH 150-200 | **0302024** |

## Electronic magnetic switches

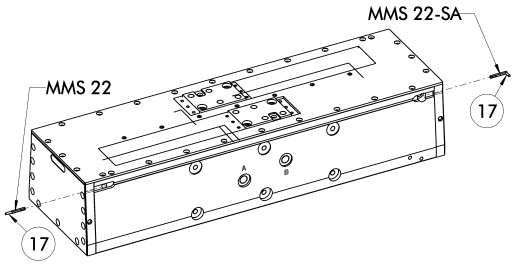


⑰ Cable outlet

End position monitoring for mounting in the C-slot

| Description | ID | Recommended product |
|---|---|---|
| Electronic magnetic switches | | |
| MMS 22-S-M5-PNP | **0301438** | |
| MMS 22-S-M5-NPN | **0301439** | |
| MMS 22-S-M8-PNP | **0301432** | • |
| MMS 22-S-M8-NPN | **0301433** | |
| MMSK 22-S-PNP | **0301434** | |
| MMSK 22-S-NPN | **0301435** | |
| Electronic magnetic switches with lateral cable outlet | | |
| MMS 22-S-M5-PNP-SA | **0301448** | |
| MMS 22-S-M5-NPN-SA | **0301449** | |
| MMS 22-S-M8-PNP-SA | **0301442** | • |
| MMS 22-S-M8-NPN-SA | **0301443** | |
| MMSK 22-S-PNP-SA | **0301444** | |
| MMSK 22-S-NPN-SA | **0301445** | |
| Reed Switches | | |
| RMS 22-S-M8 | **0377720** | • |
| Connection cables | | |
| KA BG05-L 3P-0300 | **0301652** | |
| KA BG08-L 3P-0300-PNP | **0301622** | |
| KA BG08-L 3P-0500-PNP | **0301623** | |
| KA BW05-L 3P-0300 | **0301650** | |
| KA BW08-L 3P-0300-NPN | **0301602** | |
| KA BW08-L 3P-0300-PNP | **0301594** | |
| KA BW08-L 3P-0500-NPN | **9641116** | |
| KA BW08-L 3P-0500-PNP | **0301502** | |
| Cable extensions | | |
| KV BW08-SG08 3P-0030-PNP | **0301495** | |
| KV BW08-SG08 3P-0100-PNP | **0301496** | |
| KV BW08-SG08 3P-0200-PNP | **0301497** | |

ⓘ Two sensors (closer/NO) are required for each gripper, plus extension cables as an option.
ⓘ Please note the minimum permitted bending radii for the sensor cables, which are generally 35 mm.

You can find more detailed information and individual parts of the above-mentioned accessories in the “Accessories” catalog section.

## Mounting kit for proximity switch

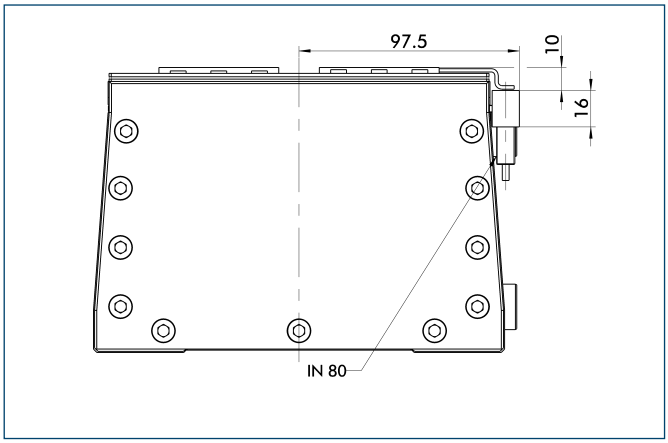


The mounting kit enables assembly of two inductive proximity switches. The kit is fitted in the sensor slot of the slotted switch.

| Description | ID |
|---|---|
| Mounting kit for proximity switch | |
| HG-PFH 150-300 | **0300770** |

ⓘ This mounting kit needs to be ordered optionally as an accessory.

## Inductive proximity switches

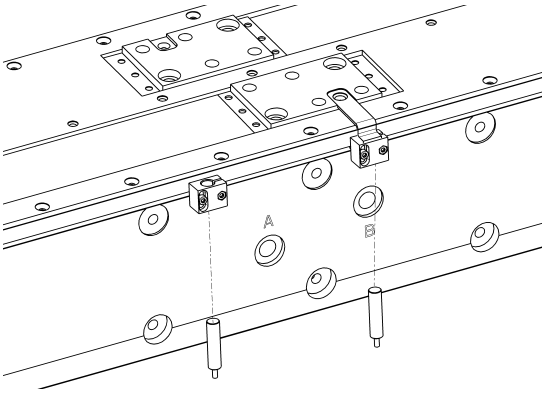

End position monitoring mounted with mounting kit

| Description | ID | Recommended product |
|---|---|---|
| Mounting kit for proximity switch | | |
| HG-PFH 150-300 | **0300770** | |
| Inductive proximity switches | | |
| IN 80-S-M8 | **0301478** | • |
| IN 80-S-M12 | **0301578** | |
| INK 80-S | **0301550** | |
| INK 80-SL | **0301579** | |

ⓘ Two sensors (closer/NO) are required for each gripper, plus extension cables as an option.
ⓘ This mounting kit needs to be ordered optionally as an accessory.
ⓘ Please note the minimum permitted bending radii for the sensor cables, which are generally 35 mm.

You can find more detailed information and individual parts of the above-mentioned accessories in the “Accessories” catalog section.

# PFH 200





## Gripping force

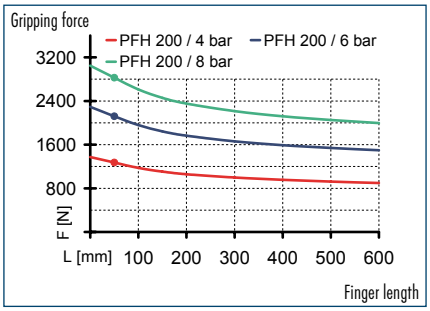


## Finger load

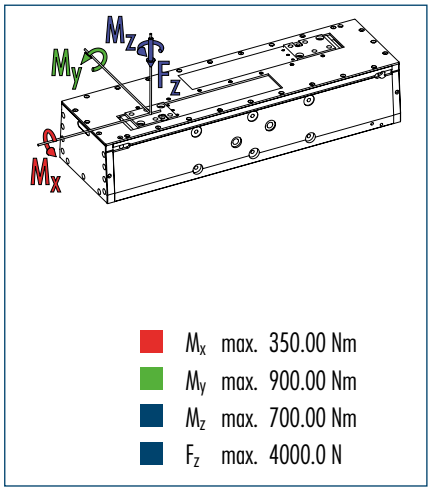


ⓘ The indicated moments and forces are static values, apply per base jaw and may occur simultaneously. $M_y$ may arise in addition to the moment generated by the gripping force itself. If the max. permitted finger weight is exceeded, it is imperative to throttle the air pressure so that the jaw movement occurs without any hitting or bouncing. Service life may be reduced.

## Technical data

| Description | | PFH 200 |
|---|---|---|
| ID | | 0302020 |
| Stroke per finger | [mm] | 200 |
| Closing force | [N] | 2200 |
| Opening force | [N] | 2200 |
| Weight | [kg] | 23.5 |
| Recommended workpiece weight | [kg] | 14.7 |
| Air consumption per double stroke | [cm³] | 1990 |
| Min./max. operating pressure | [bar] | 2/8 |
| Nominal operating pressure | [bar] | 6 |
| Closing/opening time | [s] | 0.9/0.9 |
| Max. permitted finger length | [mm] | 600 |
| Max. permitted weight per finger | [kg] | 8 |
| IP class | | 30 |
| Min./max. ambient temperature | [°C] | -10/90 |
| Repeat accuracy | [mm] | 0.02 |

ⓘ Requirements to the evenness of the mounting face (relating to the total gripper connection surface) less than 0.02 mm at an edge length of up to 100 mm / more than 0.05 mm at an edge length of more than 100 mm.

## Main view

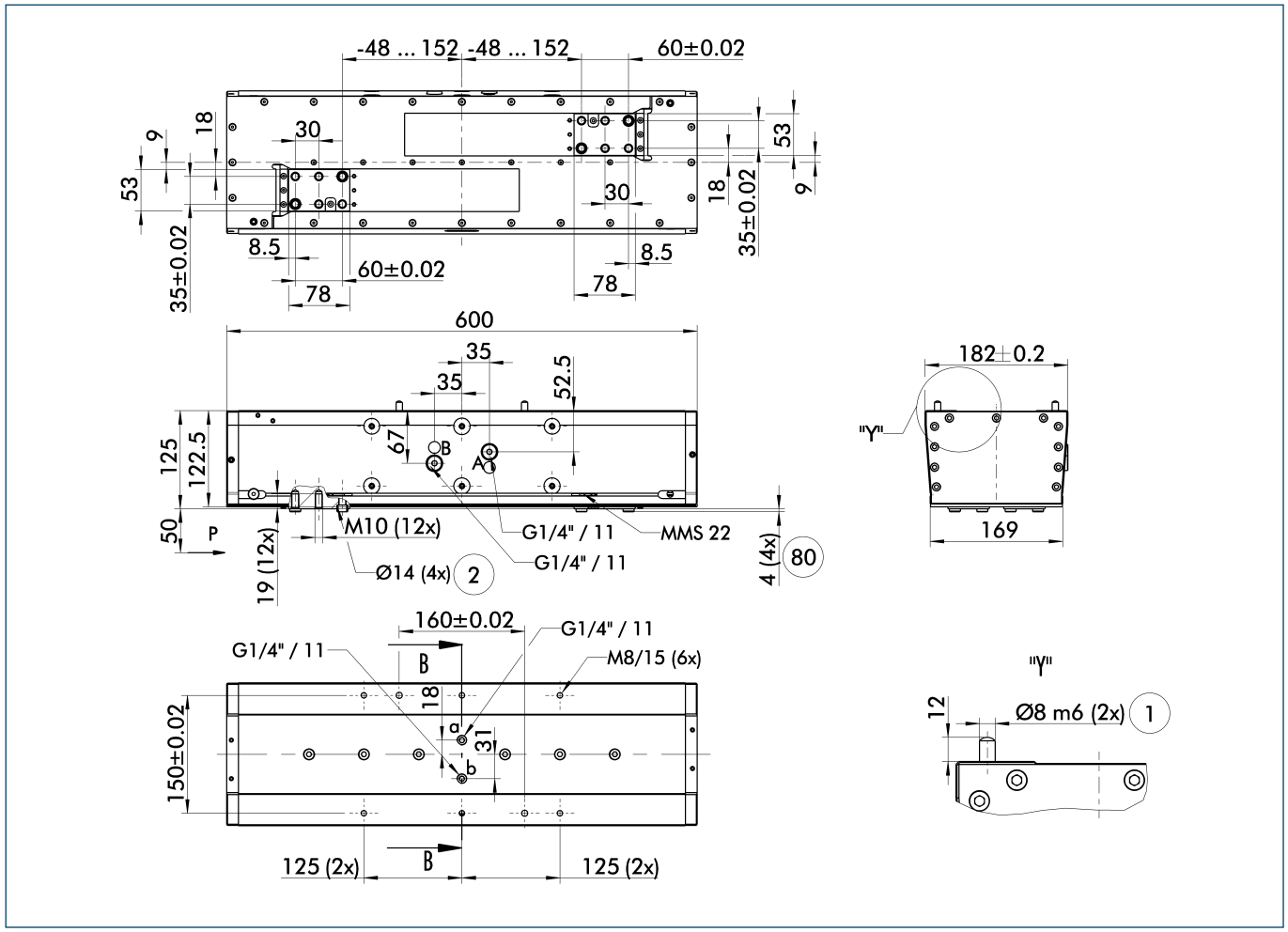


The drawing shows the gripper in the basic version with opened jaws without considering the dimensions of the described options below.

ⓘ The SDV-P pressure maintenance valve can also be used for I.D. or O.D. gripping alternatively or in addition to the spring-loaded, mechanical gripping force maintenance device (see "Accessories" catalog section).

A, a Main/direct connection, gripper opening
B, b Main/direct connection, gripper closing
① Gripper connection
② Finger connection
80 Depth of the centering sleeve hole in the matching part

## Hose-free direct connection

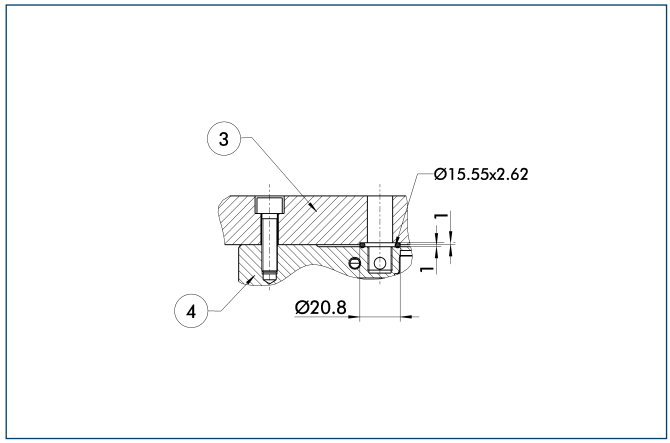


③ Adapter
④ Gripper

The direct connection is used for supplying compressed air without hoses. Instead, the pressure medium is fed through bore-holes in the mounting plate.

## Mounting kit for side mount

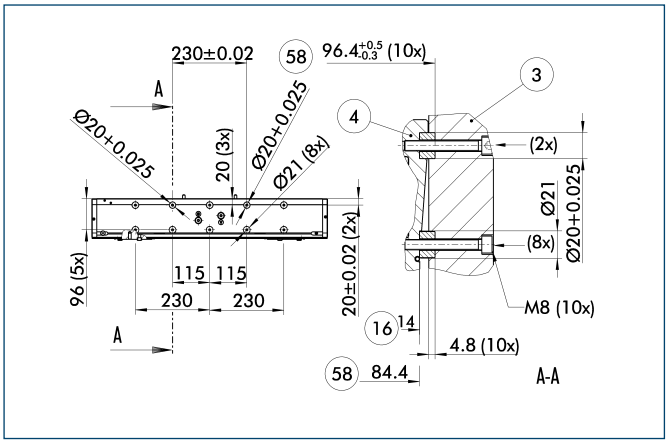


③ Adapter
④ Gripper
⑯ Max. depth of engagement
⑱ Distance from center of gripper

The mounting kit for side mount enables parallel and centric fastening at the side surface.

| Description | ID |
|---|---|
| Mounting kit for side mount | |
| AS-S PFH 150-200 | **0302024** |

## Electronic magnetic switches

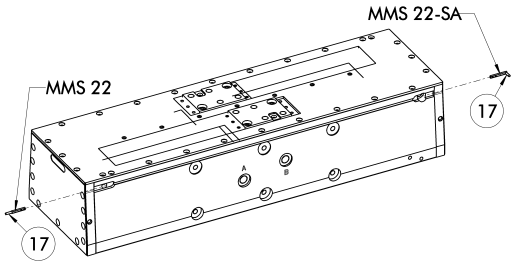


⑰ Cable outlet

End position monitoring for mounting in the C-slot

| Description | ID | Recommended product |
|---|---|---|
| Electronic magnetic switches | | |
| MMS 22-S-M5-PNP | **0301438** | |
| MMS 22-S-M5-NPN | **0301439** | |
| MMS 22-S-M8-PNP | **0301432** | • |
| MMS 22-S-M8-NPN | **0301433** | |
| MMSK 22-S-PNP | **0301434** | |
| MMSK 22-S-NPN | **0301435** | |
| Electronic magnetic switches with lateral cable outlet | | |
| MMS 22-S-M5-PNP-SA | **0301448** | |
| MMS 22-S-M5-NPN-SA | **0301449** | |
| MMS 22-S-M8-PNP-SA | **0301442** | • |
| MMS 22-S-M8-NPN-SA | **0301443** | |
| MMSK 22-S-PNP-SA | **0301444** | |
| MMSK 22-S-NPN-SA | **0301445** | |
| Reed Switches | | |
| RMS 22-S-M8 | **0377720** | • |
| Connection cables | | |
| KA BG05-L 3P-0300 | **0301652** | |
| KA BG08-L 3P-0300-PNP | **0301622** | |
| KA BG08-L 3P-0500-PNP | **0301623** | |
| KA BW05-L 3P-0300 | **0301650** | |
| KA BW08-L 3P-0300-NPN | **0301602** | |
| KA BW08-L 3P-0300-PNP | **0301594** | |
| KA BW08-L 3P-0500-NPN | **9641116** | |
| KA BW08-L 3P-0500-PNP | **0301502** | |
| Cable extensions | | |
| KV BW08-SG08 3P-0030-PNP | **0301495** | |
| KV BW08-SG08 3P-0100-PNP | **0301496** | |
| KV BW08-SG08 3P-0200-PNP | **0301497** | |

ⓘ Two sensors (closer/NO) are required for each gripper, plus extension cables as an option.
ⓘ Please note the minimum permitted bending radii for the sensor cables, which are generally 35 mm.

You can find more detailed information and individual parts of the above-mentioned accessories in the “Accessories” catalog section.

## Mounting kit for proximity switch

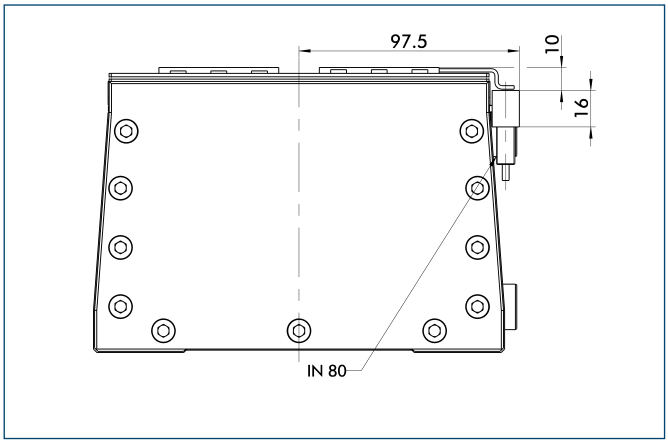


The mounting kit enables assembly of two inductive proximity switches. The kit is fitted in the sensor slot of the slotted switch.

| Description | ID |
|---|---|
| Mounting kit for proximity switch | |
| HG-PFH 150-300 | **0300770** |

ⓘ This mounting kit needs to be ordered optionally as an accessory.

## Inductive proximity switches

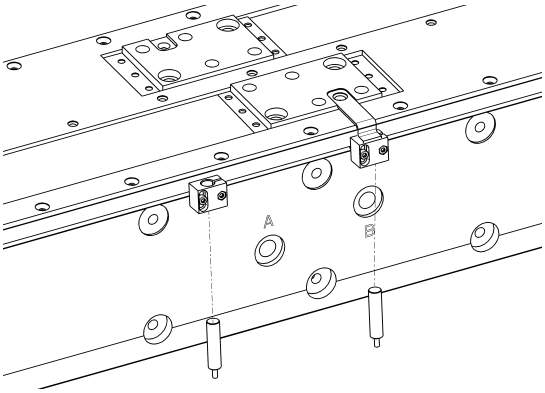

End position monitoring mounted with mounting kit

| Description | ID | Recommended product |
|---|---|---|
| Mounting kit for proximity switch | | |
| HG-PFH 150-300 | **0300770** | |
| Inductive proximity switches | | |
| IN 80-S-M8 | **0301478** | • |
| IN 80-S-M12 | **0301578** | |
| INK 80-S | **0301550** | |
| INK 80-SL | **0301579** | |

ⓘ Two sensors (closer/NO) are required for each gripper, plus extension cables as an option.
ⓘ This mounting kit needs to be ordered optionally as an accessory.
ⓘ Please note the minimum permitted bending radii for the sensor cables, which are generally 35 mm.

You can find more detailed information and individual parts of the above-mentioned accessories in the “Accessories” catalog section.

# PFH 250





## Gripping force

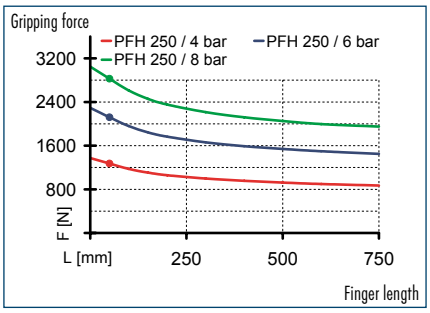


## Finger load

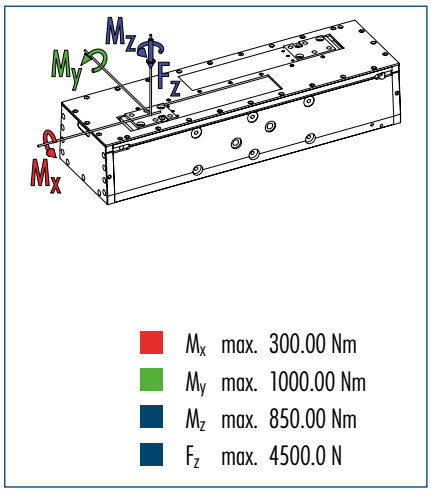


ⓘ The indicated moments and forces are static values, apply per base jaw and may occur simultaneously. $M_y$ may arise in addition to the moment generated by the gripping force itself. If the max. permitted finger weight is exceeded, it is imperative to throttle the air pressure so that the jaw movement occurs without any hitting or bouncing. Service life may be reduced.

## Technical data

| Description | | PFH 250 |
|---|---|---|
| **ID** | | **0302005** |
| Stroke per finger | [mm] | 250 |
| Closing force | [N] | 2200 |
| Opening force | [N] | 2200 |
| Weight | [kg] | 28.6 |
| Recommended workpiece weight | [kg] | 14.7 |
| Air consumption per double stroke | [cm³] | 2510 |
| Min./max. operating pressure | [bar] | 2/8 |
| Nominal operating pressure | [bar] | 6 |
| Closing/opening time | [s] | 1.1/1.1 |
| Max. permitted finger length | [mm] | 750 |
| Max. permitted weight per finger | [kg] | 9 |
| IP class | | 30 |
| Min./max. ambient temperature | [°C] | -10/90 |
| Repeat accuracy | [mm] | 0.02 |

ⓘ Requirements to the evenness of the mounting face (relating to the total gripper connection surface) less than 0.02 mm at an edge length of up to 100 mm / more than 0.05 mm at an edge length of more than 100 mm.

## Main view

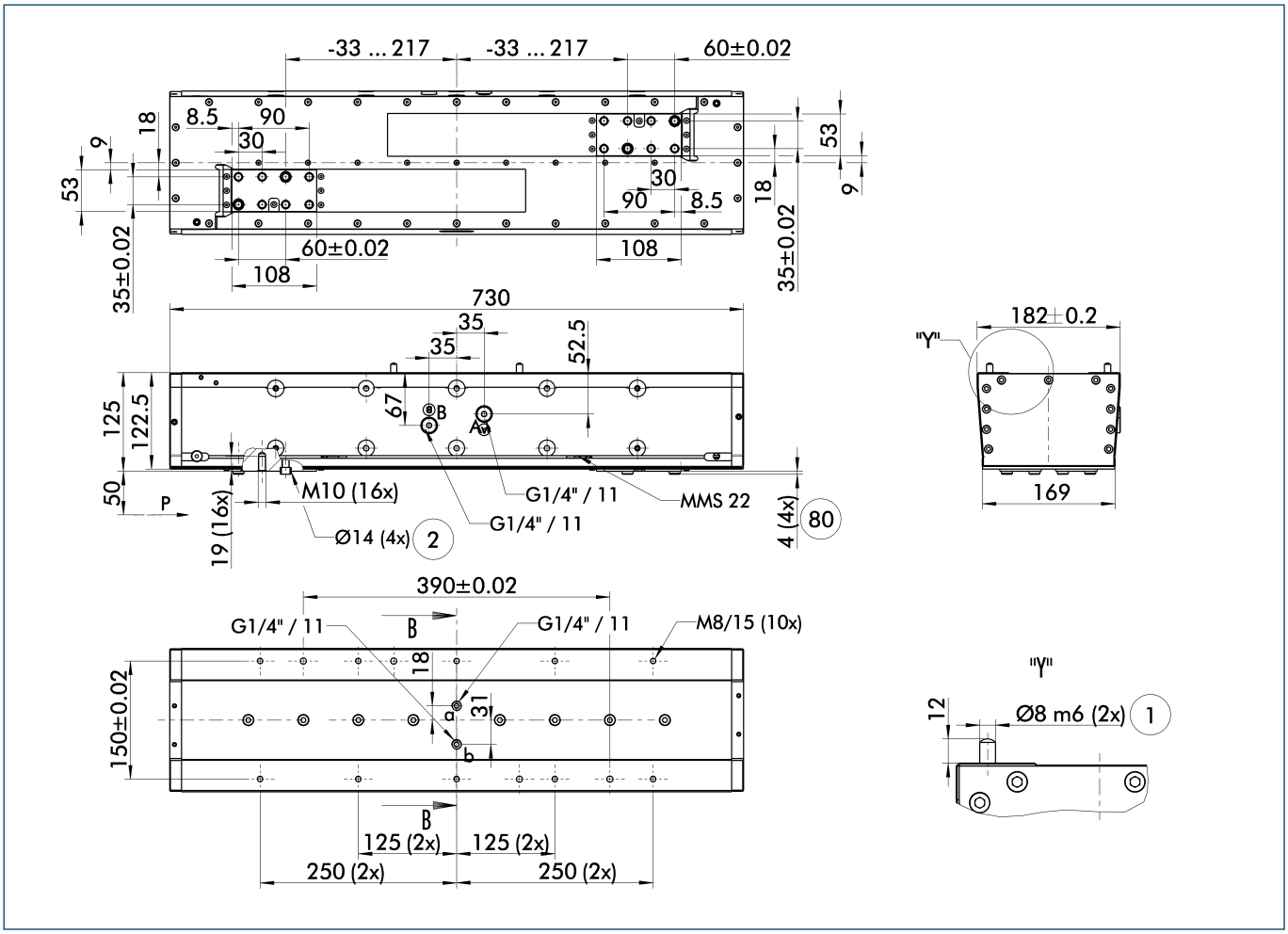


The drawing shows the gripper in the basic version with opened jaws without considering the dimensions of the described options below.

ⓘ The SDV-P pressure maintenance valve can also be used for I.D. or O.D. gripping alternatively or in addition to the spring-loaded, mechanical gripping force maintenance device (see "Accessories" catalog section).

A, a Main/direct connection, gripper opening
B, b Main/direct connection, gripper closing
① Gripper connection
② Finger connection
⑧⓪ Depth of the centering sleeve hole in the matching part

## Hose-free direct connection

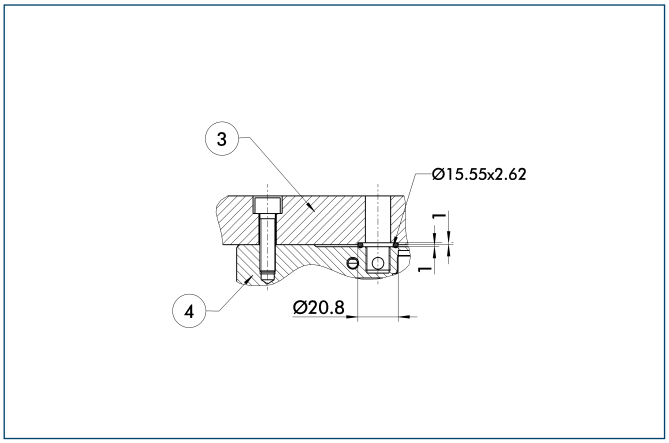


③ Adapter
④ Gripper

The direct connection is used for supplying compressed air without hoses. Instead, the pressure medium is fed through bore-holes in the mounting plate.

## Mounting kit for side mount

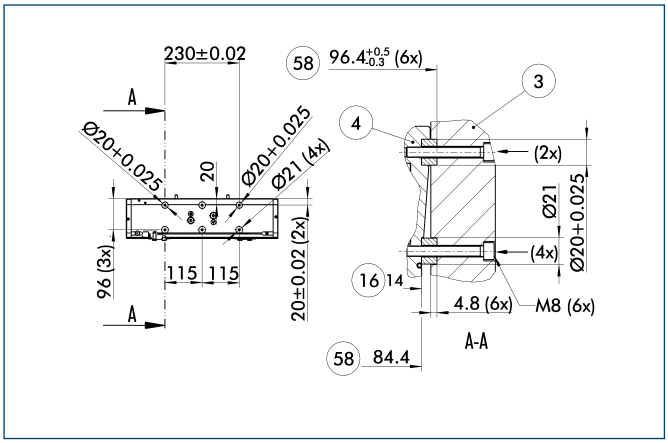


③ Adapter
④ Gripper
⑯ Max. depth of engagement
⑱ Distance from center of gripper

The mounting kit for side mount enables parallel and centric fastening at the side surface.

| Description | ID |
|---|---|
| Mounting kit for side mount | |
| AS-S PFH 250-300 | **0302026** |

## Electronic magnetic switches

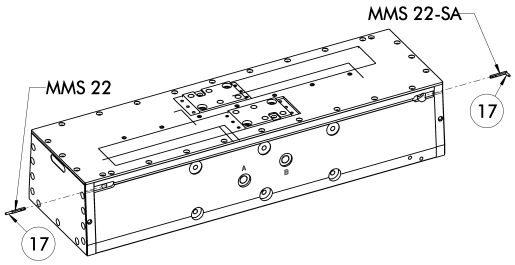


⑰ Cable outlet

End position monitoring for mounting in the C-slot

| Description | ID | Recommended product |
|---|---|---|
| Electronic magnetic switches | | |
| MMS 22-S-M5-PNP | **0301438** | |
| MMS 22-S-M5-NPN | **0301439** | |
| MMS 22-S-M8-PNP | **0301432** | • |
| MMS 22-S-M8-NPN | **0301433** | |
| MMSK 22-S-PNP | **0301434** | |
| MMSK 22-S-NPN | **0301435** | |
| Electronic magnetic switches with lateral cable outlet | | |
| MMS 22-S-M5-PNP-SA | **0301448** | |
| MMS 22-S-M5-NPN-SA | **0301449** | |
| MMS 22-S-M8-PNP-SA | **0301442** | • |
| MMS 22-S-M8-NPN-SA | **0301443** | |
| MMSK 22-S-PNP-SA | **0301444** | |
| MMSK 22-S-NPN-SA | **0301445** | |
| Reed Switches | | |
| RMS 22-S-M8 | **0377720** | • |
| Connection cables | | |
| KA BG05-L 3P-0300 | **0301652** | |
| KA BG08-L 3P-0300-PNP | **0301622** | |
| KA BG08-L 3P-0500-PNP | **0301623** | |
| KA BW05-L 3P-0300 | **0301650** | |
| KA BW08-L 3P-0300-NPN | **0301602** | |
| KA BW08-L 3P-0300-PNP | **0301594** | |
| KA BW08-L 3P-0500-NPN | **9641116** | |
| KA BW08-L 3P-0500-PNP | **0301502** | |
| Cable extensions | | |
| KV BW08-SG08 3P-0030-PNP | **0301495** | |
| KV BW08-SG08 3P-0100-PNP | **0301496** | |
| KV BW08-SG08 3P-0200-PNP | **0301497** | |

ⓘ Two sensors (closer/NO) are required for each gripper, plus extension cables as an option.
ⓘ Please note the minimum permitted bending radii for the sensor cables, which are generally 35 mm.


You can find more detailed information and individual parts of the above-mentioned accessories in the “Accessories” catalog section.

## Mounting kit for proximity switch

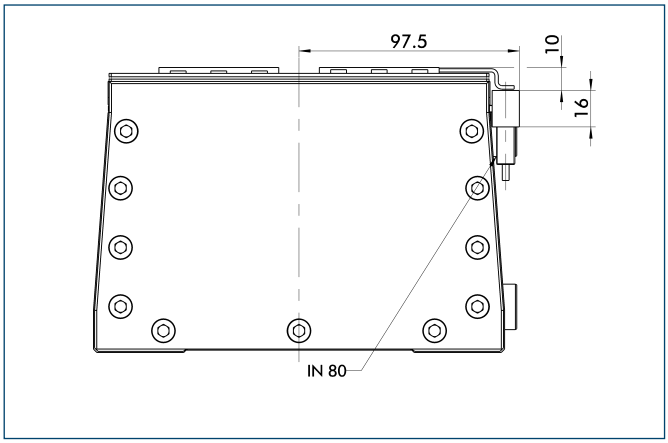


The mounting kit enables assembly of two inductive proximity switches. The kit is fitted in the sensor slot of the slotted switch.

| Description | ID |
|---|---|
| Mounting kit for proximity switch | |
| HG-PFH 150-300 | **0300770** |

ⓘ This mounting kit needs to be ordered optionally as an accessory.

## Inductive proximity switches

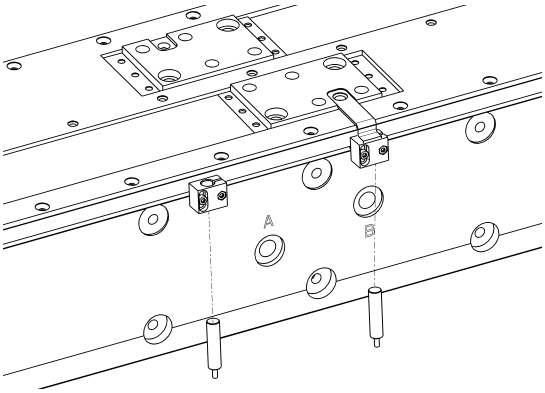

End position monitoring mounted with mounting kit

| Description | ID | Recommended product |
|---|---|---|
| Mounting kit for proximity switch | | |
| HG-PFH 150-300 | **0300770** | |
| Inductive proximity switches | | |
| IN 80-S-M8 | **0301478** | • |
| IN 80-S-M12 | **0301578** | |
| INK 80-S | **0301550** | |
| INK 80-SL | **0301579** | |

ⓘ Two sensors (closer/NO) are required for each gripper, plus extension cables as an option.
ⓘ This mounting kit needs to be ordered optionally as an accessory.
ⓘ Please note the minimum permitted bending radii for the sensor cables, which are generally 35 mm.

You can find more detailed information and individual parts of the above-mentioned accessories in the “Accessories” catalog section.

# PFH 300

**Pneumatic • 2-Finger Parallel Gripper • Long-stroke Gripper**



## Gripping force

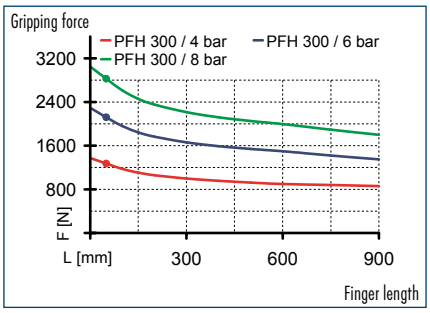


## Finger load

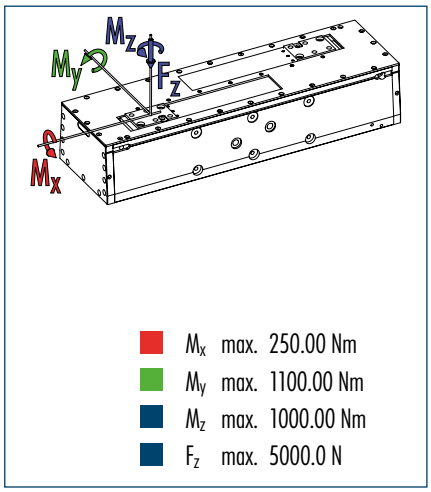


ⓘ The indicated moments and forces are static values, apply per base jaw and may occur simultaneously. $M_y$ may arise in addition to the moment generated by the gripping force itself. If the max. permitted finger weight is exceeded, it is imperative to throttle the air pressure so that the jaw movement occurs without any hitting or bouncing. Service life may be reduced.

## Technical data

| Description | | PFH 300 |
|---|---|---|
| ID | | 0302010 |
| Stroke per finger | [mm] | 300 |
| Closing force | [N] | 2200 |
| Opening force | [N] | 2200 |
| Weight | [kg] | 33.6 |
| Recommended workpiece weight | [kg] | 14.7 |
| Air consumption per double stroke | [cm³] | 3010 |
| Min./max. operating pressure | [bar] | 2/8 |
| Nominal operating pressure | [bar] | 6 |
| Closing/opening time | [s] | 1.25/1.25 |
| Max. permitted finger length | [mm] | 900 |
| Max. permitted weight per finger | [kg] | 10 |
| IP class | | 30 |
| Min./max. ambient temperature | [°C] | -10/90 |
| Repeat accuracy | [mm] | 0.02 |

ⓘ Requirements to the evenness of the mounting face (relating to the total gripper connection surface) less than 0.02 mm at an edge length of up to 100 mm / more than 0.05 mm at an edge length of more than 100 mm.

## Main view

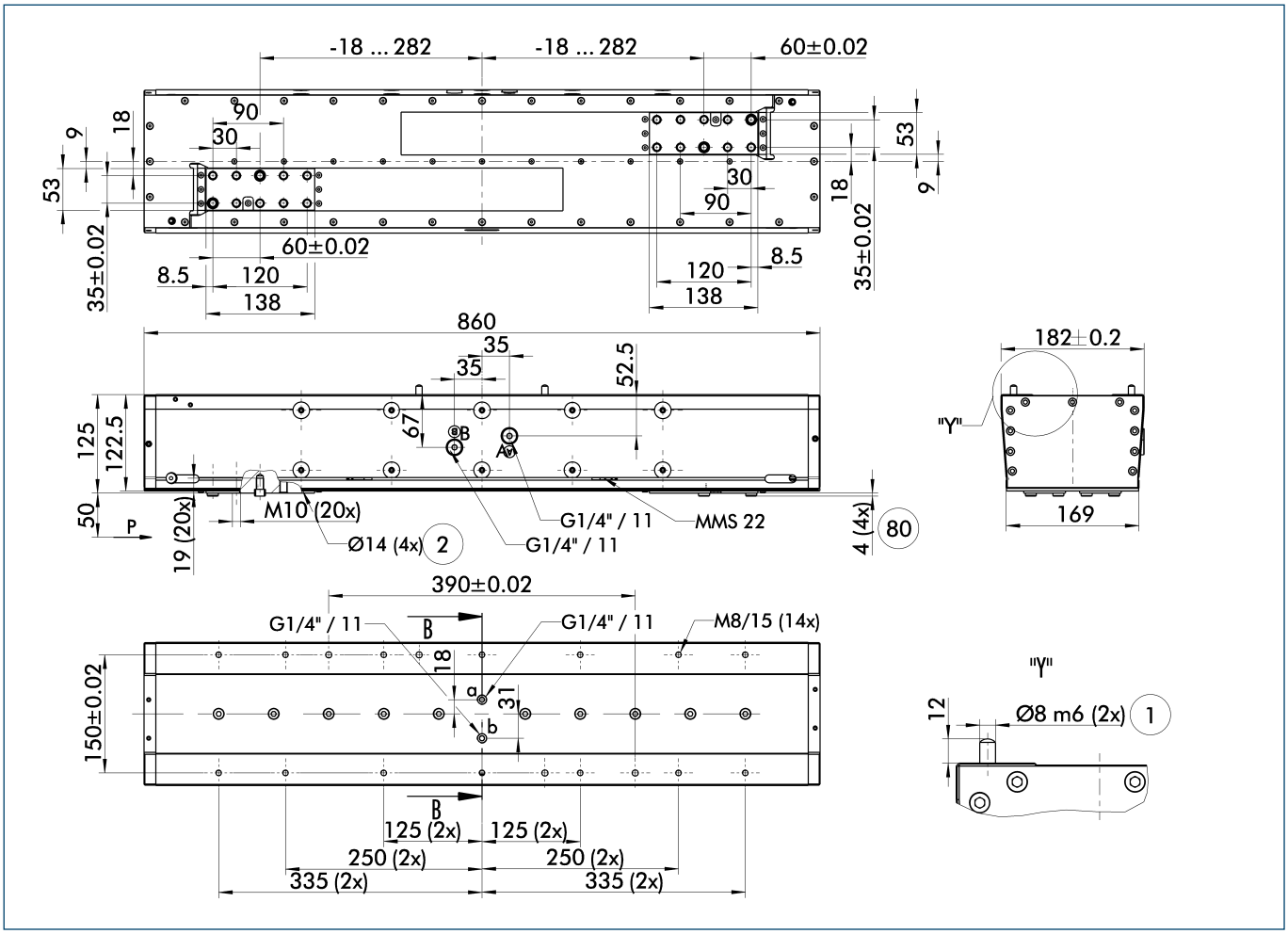


The drawing shows the gripper in the basic version with opened jaws without considering the dimensions of the described options below.

ⓘ The SDV-P pressure maintenance valve can also be used for I.D. or O.D. gripping alternatively or in addition to the spring-loaded, mechanical gripping force maintenance device (see "Accessories" catalog section).

A, a Main/direct connection, gripper opening
B, b Main/direct connection, gripper closing
① Gripper connection
② Finger connection
80 Depth of the centering sleeve hole in the matching part

## Hose-free direct connection

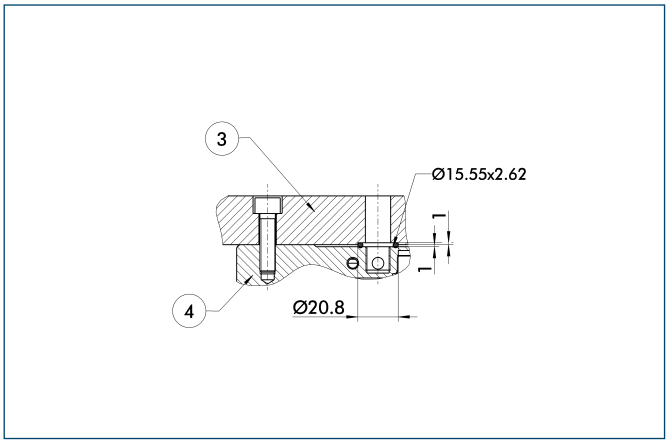


③ Adapter
④ Gripper

The direct connection is used for supplying compressed air without hoses. Instead, the pressure medium is fed through bore-holes in the mounting plate.

## Mounting kit for side mount

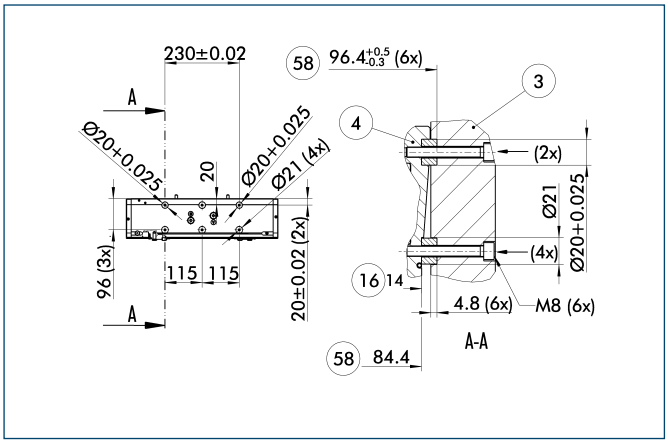


③ Adapter
④ Gripper
⑯ Max. depth of engagement
⑱ Distance from center of gripper

The mounting kit for side mount enables parallel and centric fastening at the side surface.

| Description | ID |
|---|---|
| Mounting kit for side mount | |
| AS-S PFH 250-300 | **0302026** |

## Electronic magnetic switches

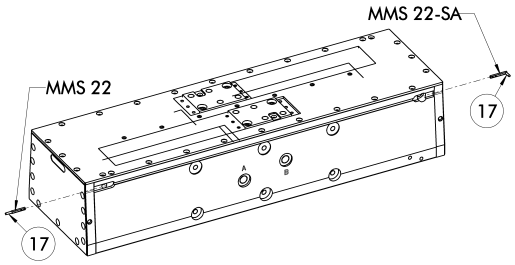


⑰ Cable outlet

End position monitoring for mounting in the C-slot

| Description | ID | Recommended product |
|---|---|---|
| Electronic magnetic switches | | |
| MMS 22-S-M5-PNP | **0301438** | |
| MMS 22-S-M5-NPN | **0301439** | |
| MMS 22-S-M8-PNP | **0301432** | • |
| MMS 22-S-M8-NPN | **0301433** | |
| MMSK 22-S-PNP | **0301434** | |
| MMSK 22-S-NPN | **0301435** | |
| Electronic magnetic switches with lateral cable outlet | | |
| MMS 22-S-M5-PNP-SA | **0301448** | |
| MMS 22-S-M5-NPN-SA | **0301449** | |
| MMS 22-S-M8-PNP-SA | **0301442** | • |
| MMS 22-S-M8-NPN-SA | **0301443** | |
| MMSK 22-S-PNP-SA | **0301444** | |
| MMSK 22-S-NPN-SA | **0301445** | |
| Reed Switches | | |
| RMS 22-S-M8 | **0377720** | • |
| Connection cables | | |
| KA BG05-L 3P-0300 | **0301652** | |
| KA BG08-L 3P-0300-PNP | **0301622** | |
| KA BG08-L 3P-0500-PNP | **0301623** | |
| KA BW05-L 3P-0300 | **0301650** | |
| KA BW08-L 3P-0300-NPN | **0301602** | |
| KA BW08-L 3P-0300-PNP | **0301594** | |
| KA BW08-L 3P-0500-NPN | **9641116** | |
| KA BW08-L 3P-0500-PNP | **0301502** | |
| Cable extensions | | |
| KV BW08-SG08 3P-0030-PNP | **0301495** | |
| KV BW08-SG08 3P-0100-PNP | **0301496** | |
| KV BW08-SG08 3P-0200-PNP | **0301497** | |

ⓘ Two sensors (closer/NO) are required for each gripper, plus extension cables as an option.
ⓘ Please note the minimum permitted bending radii for the sensor cables, which are generally 35 mm.

You can find more detailed information and individual parts of the above-mentioned accessories in the “Accessories” catalog section.

## Mounting kit for proximity switch

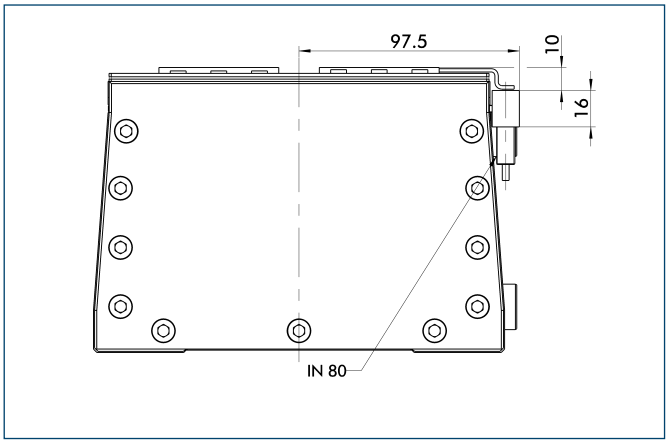


The mounting kit enables assembly of two inductive proximity switches. The kit is fitted in the sensor slot of the slotted switch.

| Description | ID |
|---|---|
| Mounting kit for proximity switch | |
| HG-PFH 150-300 | **0300770** |

ⓘ This mounting kit needs to be ordered optionally as an accessory.

## Inductive proximity switches

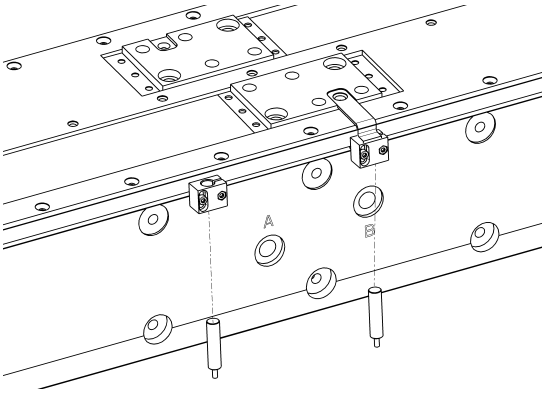

End position monitoring mounted with mounting kit

| Description | ID | Recommended product |
|---|---|---|
| Mounting kit for proximity switch | | |
| HG-PFH 150-300 | **0300770** | |
| Inductive proximity switches | | |
| IN 80-S-M8 | **0301478** | • |
| IN 80-S-M12 | **0301578** | |
| INK 80-S | **0301550** | |
| INK 80-SL | **0301579** | |

ⓘ Two sensors (closer/NO) are required for each gripper, plus extension cables as an option.
ⓘ This mounting kit needs to be ordered optionally as an accessory.
ⓘ Please note the minimum permitted bending radii for the sensor cables, which are generally 35 mm.

You can find more detailed information and individual parts of the above-mentioned accessories in the “Accessories” catalog section.

# PSH

**Pneumatic • 2-Finger Parallel Gripper • Long-stroke Gripper**

**Sizes**
22 ... 52

**Weight**
0.77 kg ... 8.05 kg

**Gripping force**
320 N ... 1760 N

**Stroke per finger**
14 mm ... 100 mm

**Workpiece weight**
1.6 kg ... 8.8 kg

## Application example




**Rapid loading and unloading unit on a swivel head base. Due to the sturdiness of this unit, it is particularly suitable for use in machine tools.**

1. 2-Finger Parallel Gripper PSH
2. Swivel Head SRH-plus

## Long-stroke Gripper

2-Finger Parallel Gripper with long jaw stroke and dirt-resistant round guidances

## Field of application

for slightly dirty working environments and a broad range of parts

## Your advantages and benefits

**High maximum moments possible**
suitable for using long gripper fingers

**Dirt-protected round guidances**
sealed, for long strokes

**Fastening at two gripper sides with centering**
for universal and flexible gripper assembly

**Air supply via hose-free direct connection or screw connections**
for the flexible supply of compressed air in all automation systems

**Comprehensive sensor accessory program**
for versatile interrogation possibilities and control of stroke position

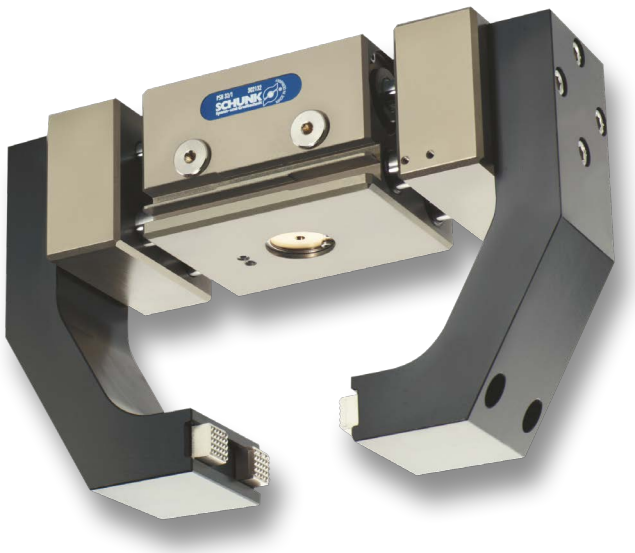

## General note to the series

**Principle of function**
Rack and pinion principle

**Housing material**
Aluminum

**Base jaw material**
Steel

**Actuation**
pneumatic, with filtered compressed air (10 microns): dry, lubricated or non-lubricated
Pressure medium: Required quality class of compressed air according to DIN ISO 8573-1: 6 4 4

**Warranty**
24 months (details, general terms and conditions and operation manuals can be downloaded under www.schunk.com)

**Scope of delivery**
Centering sleeves, O-rings for direct connection, assembly and operating manual with manufacturer's declaration

**Gripping force maintenance device**
possible with SDV-P pressure maintenance valve

## Sectional diagram

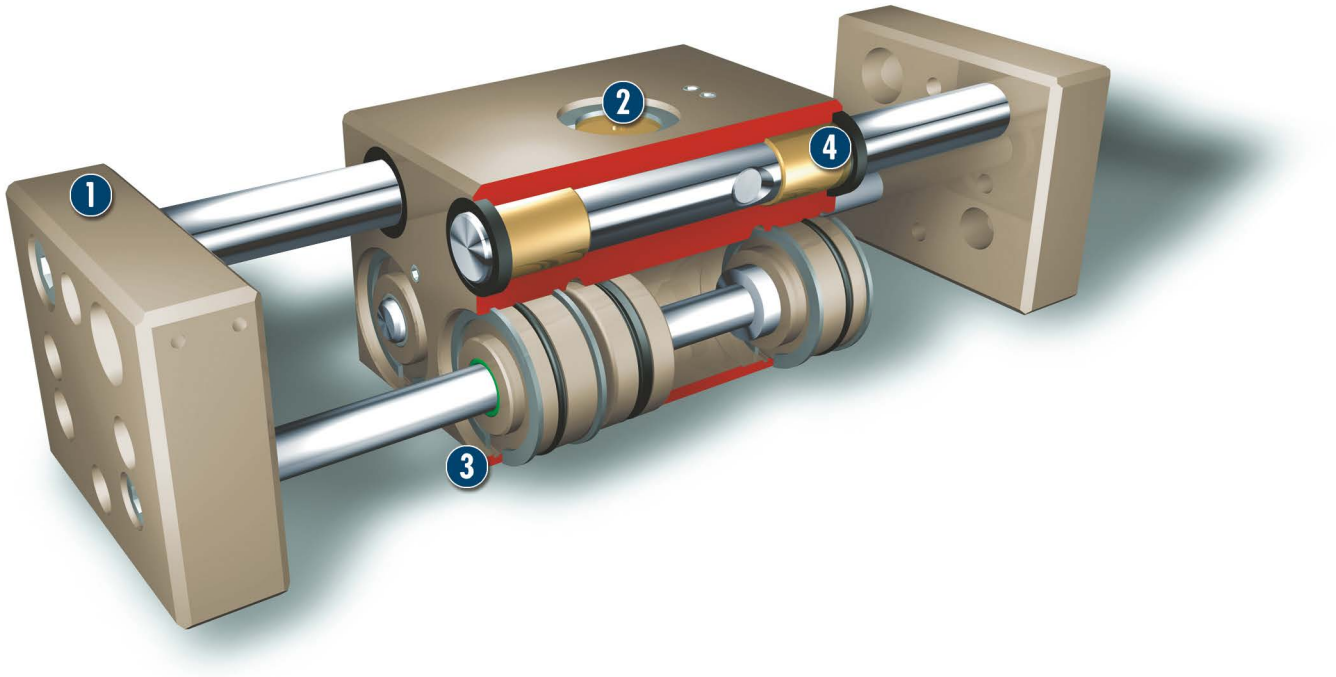


1 **Base jaw**
for the connection of workpiece-specific gripper fingers

2 **Kinematics**
Rack and pinion principle for centric gripping

3 **Housing**
weight-optimized through application of hard-anodized, high-strength aluminum alloy

4 **Round guidances**
sealed, for long strokes

## Functional description

By actuating the pistons with compressed air, the base jaws, which are located at the piston and the rack, are moved.
The jaw stroke is synchronized by means of rack and pinion kinematics.

## Options and special information

### Finger position

can be monitored by magnetic and/or inductive proximity switches. Unsynchronized version available on request in special design.

## Accessories

Accessories from SCHUNK – the suitable supplement for maximum functionality, reliability and performance of all automation modules.

### Centering sleeves



### Fittings



### Magnetic Switches



### Inductive proximity switches



### Plastic inserts



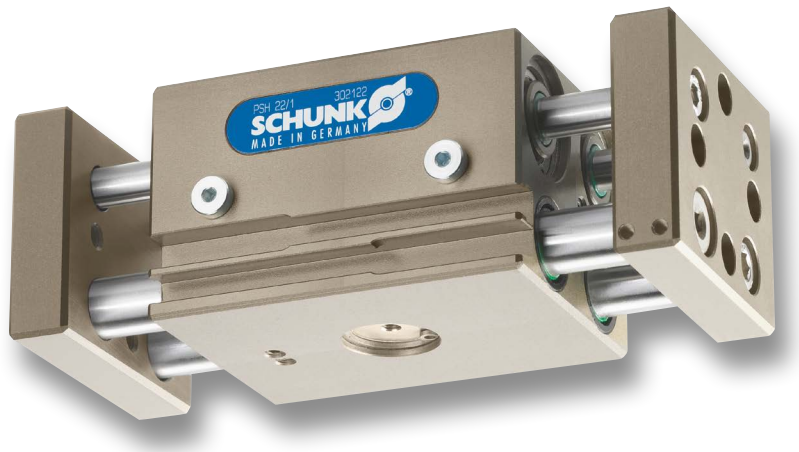


### Sensor cables



### Gripper pads

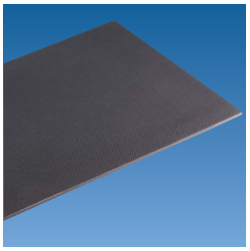

### Sensor Distributor

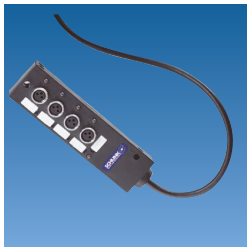

### Pressure maintenance valve



### Quick-change Jaw System



### Finger blanks



### Flexible Position Sensor

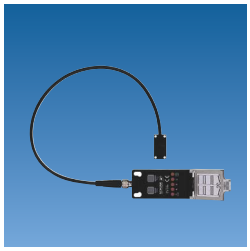

ⓘ For the exact size of the required accessories, availability of this size and the designation and ID, please refer to the additional views at the end of the size in question. You will find more detailed information on our accessory range in the “Accessories” catalog section.

## General note to the series

### Gripping force

is the arithmetic total of the gripping force applied to each finger at distance P (see illustration) measured from the upper edge of the gripper.

### Finger length

The finger length is measured from the upper edge of the gripper housing in the direction of the main axis.

### Repeat accuracy

is defined as the spread of the limit position after 100 consecutive strokes.

### Workpiece weight

The recommended workpiece weight is calculated for a force-type connection with a coefficient of friction of 0.1 and a safety factor of 2 against slippage of the workpiece on acceleration due to gravity g. Considerably heavier workpiece weights are permitted with form-fit gripping.

### Closing and opening times

Closing and opening times are purely the times that the base jaws or fingers are in motion. Valve switching times, hose filling times or PLC reaction times are not included in the above times and must be taken into consideration when determining cycle times.

# PSH 22

**Pneumatic • 2-Finger Parallel Gripper • Long-stroke Gripper**



## Gripping force

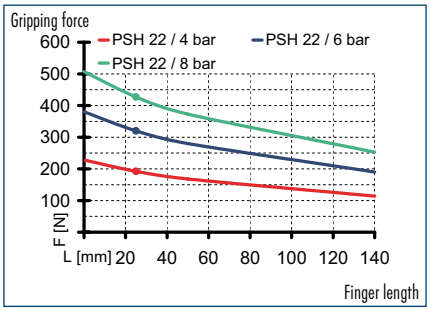


## Finger load

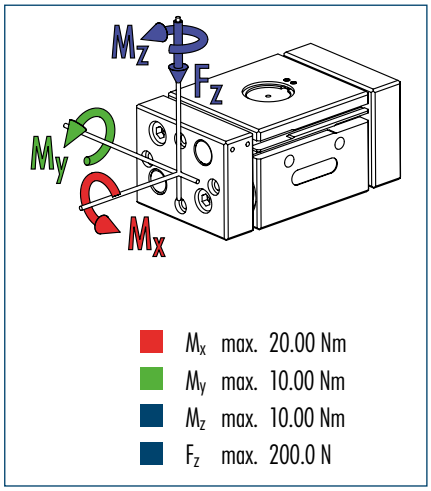


ⓘ The indicated moments and forces are static values, apply per base jaw and may occur simultaneously. $M_y$ may arise in addition to the moment generated by the gripping force itself. If the max. permitted finger weight is exceeded, it is imperative to throttle the air pressure so that the jaw movement occurs without any hitting or bouncing. Service life may be reduced.

## Technical data

| Description | | PSH 22-1 | PSH 22-2 |
|---|---|---|---|
| **ID** | | **0302122** | **0302123** |
| Stroke per finger | [mm] | 28 | 14 |
| Closing force | [N] | 320 | 320 |
| Opening force | [N] | 320 | 320 |
| Weight | [kg] | 0.95 | 0.77 |
| Recommended workpiece weight | [kg] | 1.6 | 1.6 |
| Air consumption per double stroke | [cm³] | 36 | 18 |
| Min./max. operating pressure | [bar] | 3/8 | 3/8 |
| Nominal operating pressure | [bar] | 6 | 6 |
| Closing/opening time | [s] | 0.1/0.1 | 0.08/0.08 |
| Max. permitted finger length | [mm] | 140 | 140 |
| Max. permitted weight per finger | [kg] | 0.8 | 0.8 |
| IP class | | 67 | 67 |
| Min./max. ambient temperature | [°C] | -10/90 | -10/90 |
| Repeat accuracy | [mm] | 0.1 | 0.1 |
| **OPTIONS and their characteristics** | | | |
| High-temperature version | | **39302122** | **39302123** |
| Min./max. ambient temperature | [°C] | -10/130 | -10/130 |

ⓘ Requirements to the evenness of the mounting face (relating to the total gripper connection surface) less than 0.02 mm at an edge length of up to 100 mm / more than 0.05 mm at an edge length of more than 100 mm.

## Main view

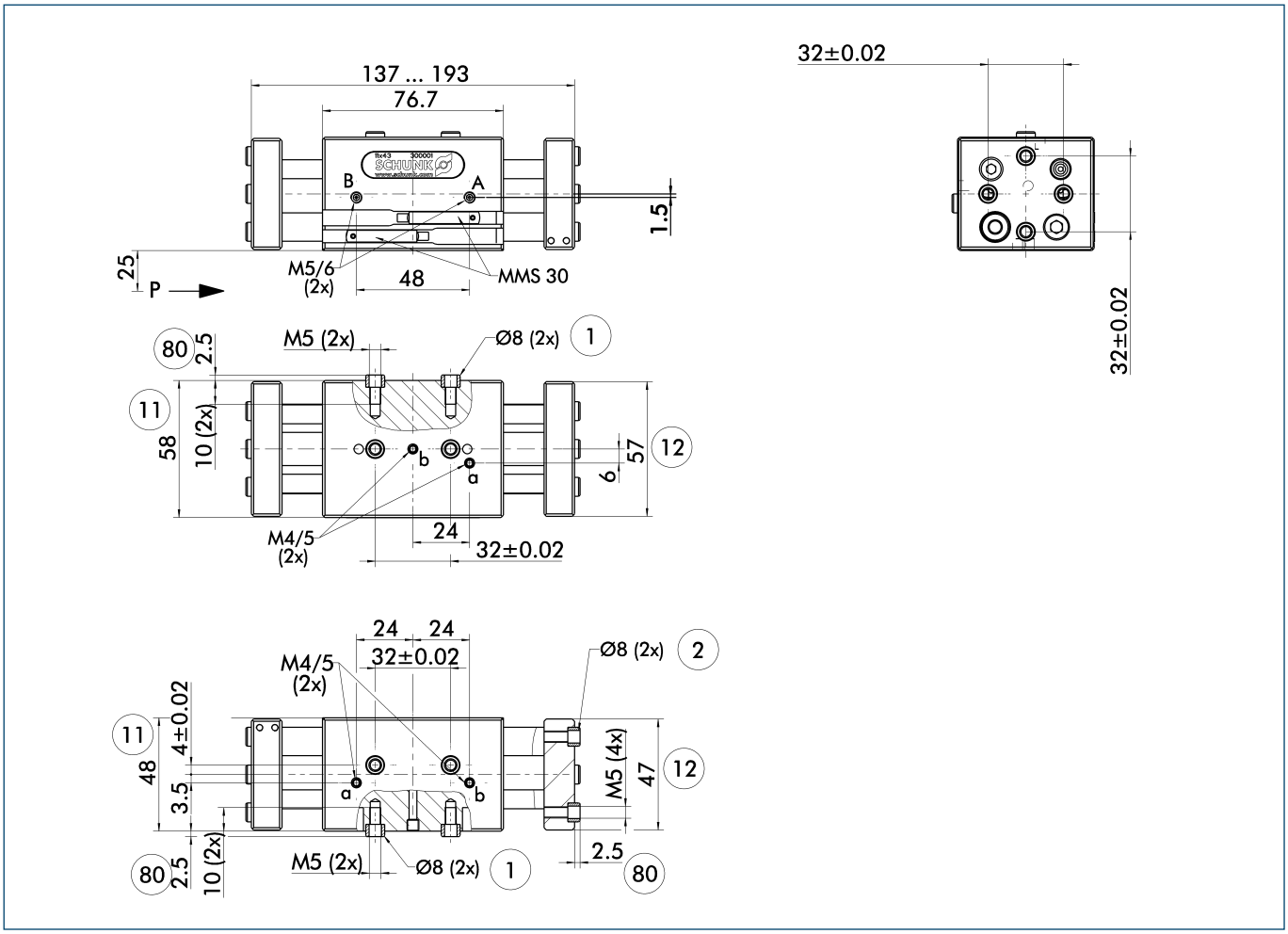


The drawing shows the gripper in the basic version with closed jaws, the dimensions do not include the options described below.

ⓘ The SDV-P pressure maintenance valve can be used as a gripping force maintenance device (see "Accessories" catalog section).

A, a Main/direct connection, gripper opening
B, b Main/direct connection, gripper closing
① Gripper connection
② Finger connection
⑪ Housing
⑫ Jaw
⑧⓪ Depth of the centering sleeve hole in the matching part

## Hose-free direct connection

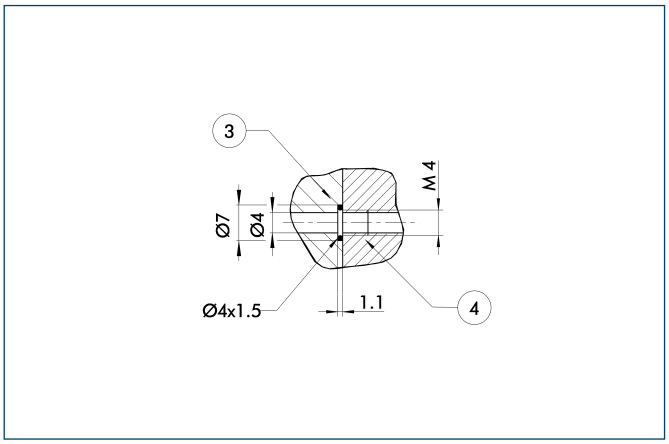


③ Adapter
④ Gripper

The direct connection is used for supplying compressed air without hoses. Instead, the pressure medium is fed through bore-holes in the mounting plate.

## Stroke versions

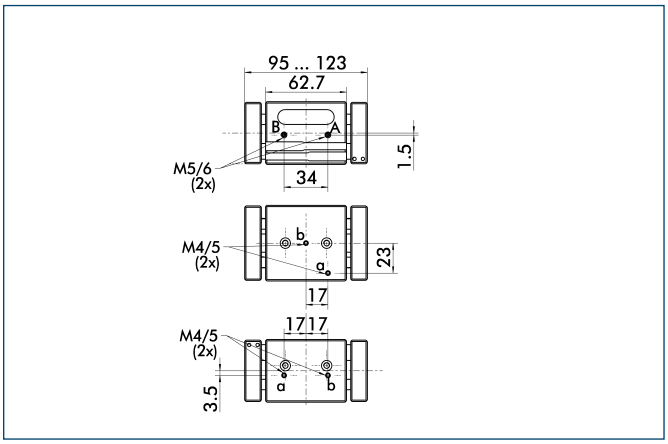


The drawing shows changes in dimensions of the versions with a differing stroke compared to the main view of the shown version.

## Intermediate Jaws

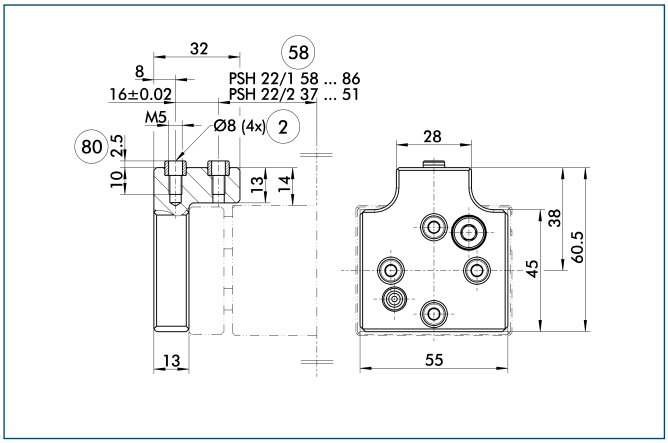


② Finger connection
⑤⑧ Distance from center of gripper
⑧⓪ Depth of the centering sleeve hole in the matching part

Optionally intermediate jaws can be used, enabling direct connection and alignment of top jaws and various standard accessories in Z-direction.

| Description | ID | Material | Scope of delivery |
|---|---|---|---|
| Intermediate Jaws | | | |
| ZBA-PSH-22 | **0300225** | Aluminum | 1 |

## Mounting kit for FPS

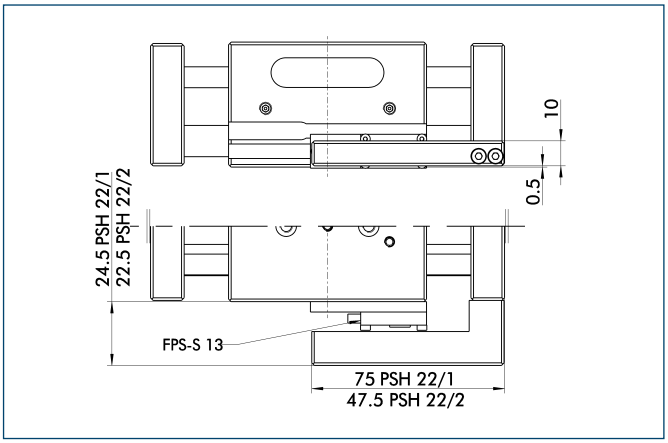


The FPS flexible position sensor can distinguish between five freely programmable ranges or switching points for the stroke of a gripper and can be used in conjunction with a PC as a measuring system.

| Description | ID |
|---|---|
| Mounting kit for FPS | |
| AS-PSH 22-1 | **0301736** |
| AS-PSH 22-2 | **0301737** |

ⓘ This mounting kit needs to be ordered optionally as an accessory.

You can find more detailed information and individual parts of the above-mentioned accessories in the “Accessories” catalog section.

## Electronic magnetic switches

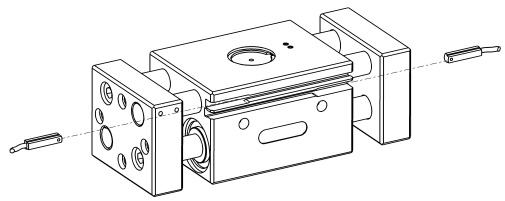

End position monitoring for mounting in the C-slot

| Description | ID | Recommended product |
|---|---|---|
| Electronic magnetic switches | | |
| MMS 30-S-M8-PNP | **0301471** | • |
| MMS 30-S-M12-PNP | **0301571** | |
| MMSK 30-S-PNP | **0301563** | |
| Connection cables | | |
| KA BG08-L 3P-0300-PNP | **0301622** | |
| KA BG08-L 3P-0500-PNP | **0301623** | |
| KA BG12-L 3P-0500-PNP | **30016369** | |
| KA BW08-L 3P-0300-PNP | **0301594** | |
| KA BW08-L 3P-0500-PNP | **0301502** | |
| Cable extensions | | |
| KV BG12-SG12 3P-0030-PNP | **0301999** | |
| KV BG12-SG12 3P-0060-PNP | **0301998** | |
| KV BW08-SG08 3P-0030-PNP | **0301495** | |
| KV BW08-SG08 3P-0100-PNP | **0301496** | |
| KV BW08-SG08 3P-0200-PNP | **0301497** | |
| KV BW12-SG12 3P-0030-PNP | **0301595** | |
| KV BW12-SG12 3P-0100-PNP | **0301596** | |
| KV BW12-SG12 3P-0200-PNP | **0301597** | |

ⓘ Two sensors (closer/NO) are required for each gripper, plus extension cables as an option.

ⓘ Please note the minimum permitted bending radii for the sensor cables, which are generally 35 mm.

## Mounting kit for proximity switch

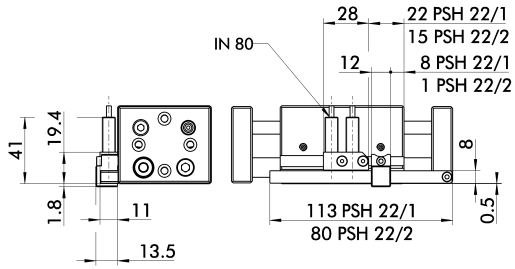


The mounting kit includes a bracket, switch cams and mounting screws. Proximity switches must be ordered separately.

| Description | ID |
|---|---|
| Mounting kit for proximity switch | |
| HG-PSH 22-1 | **0300754** |
| HG-PSH 22-2 | **0300755** |

ⓘ This mounting kit needs to be ordered optionally as an accessory.

You can find more detailed information and individual parts of the above-mentioned accessories in the “Accessories” catalog section.

## Inductive proximity switches

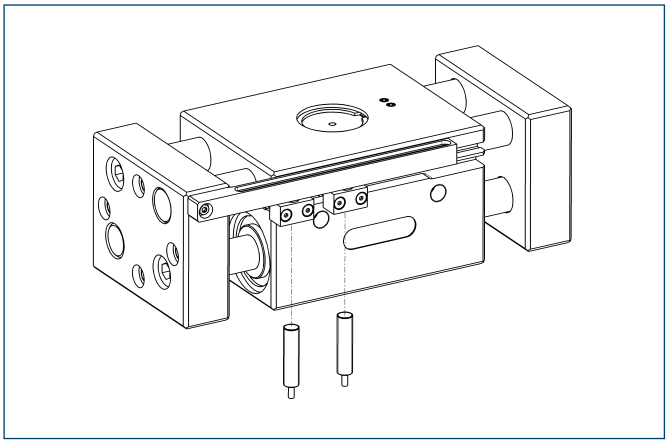

End position monitoring mounted with mounting kit

| Description | ID | Recommended product |
|---|---|---|
| Mounting kit for proximity switch | | |
| HG-PSH 22-1 | **0300754** | |
| HG-PSH 22-2 | **0300755** | |
| Inductive proximity switches | | |
| IN 80-S-M8 | **0301478** | • |
| IN 80-S-M12 | **0301578** | |
| INK 80-S | **0301550** | |
| IN-C 80-S-M8 | **0301475** | |
| INK 80-SL | **0301579** | |

ⓘ Two sensors (closer/NO) are required for each gripper, plus extension cables as an option.

ⓘ This mounting kit needs to be ordered optionally as an accessory.

ⓘ Please note the minimum permitted bending radii for the sensor cables, which are generally 35 mm.

## Flexible Position Sensor

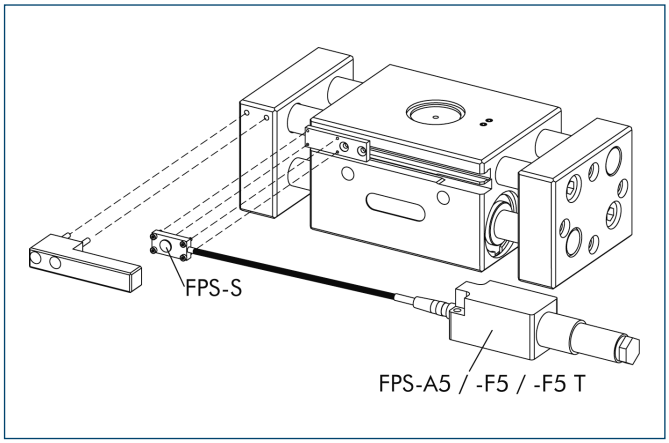


Flexible position monitoring of up to five positions

| Description | ID |
|---|---|
| Mounting kit for FPS | |
| AS-PSH 22-1 | **0301736** |
| AS-PSH 22-2 | **0301737** |
| Electronic Processor | |
| FPS-F5 | **0301805** |
| FPS-F5 T | **0301807** |
| Sensor | |
| FPS-S 13 | **0301705** |

ⓘ When using a FPS system, a FPS sensor (FPS-S) and a control unit (FPS-F5 / F5 T or A5) are required for each gripper as well as a mounting kit (AS), if listed. Cable extensions (KV) are available as options in the "Accessories" catalog section.

You can find more detailed information and individual parts of the above-mentioned accessories in the "Accessories" catalog section.

# PSH 32

**Pneumatic • 2-Finger Parallel Gripper • Long-stroke Gripper**



## Gripping force

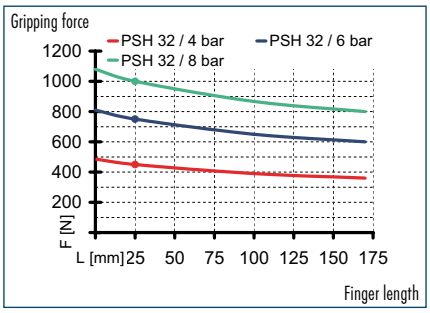


## Finger load

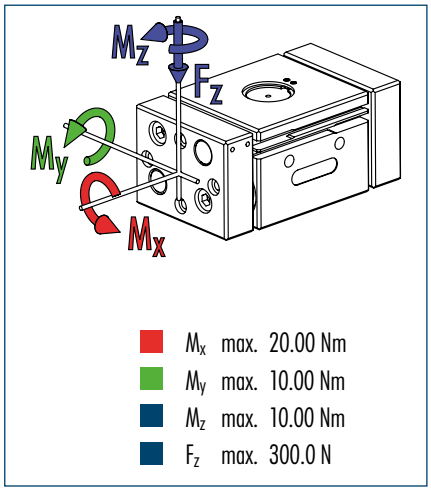


ⓘ The indicated moments and forces are static values, apply per base jaw and may occur simultaneously. $M_y$ may arise in addition to the moment generated by the gripping force itself. If the max. permitted finger weight is exceeded, it is imperative to throttle the air pressure so that the jaw movement occurs without any hitting or bouncing. Service life may be reduced.

## Technical data

| Description | | PSH 32-1 | PSH 32-2 |
|---|---|---|---|
| **ID** | | **0302132** | **0302133** |
| Stroke per finger | [mm] | 35 | 22.5 |
| Closing force | [N] | 750 | 750 |
| Opening force | [N] | 750 | 750 |
| Weight | [kg] | 2.05 | 1.8 |
| Recommended workpiece weight | [kg] | 3.75 | 3.75 |
| Air consumption per double stroke | [cm³] | 101 | 65 |
| Min./max. operating pressure | [bar] | 3/8 | 3/8 |
| Nominal operating pressure | [bar] | 6 | 6 |
| Closing/opening time | [s] | 0.2/0.2 | 0.12/0.12 |
| Max. permitted finger length | [mm] | 170 | 170 |
| Max. permitted weight per finger | [kg] | 1.5 | 1.5 |
| IP class | | 67 | 67 |
| Min./max. ambient temperature | [°C] | -10/90 | -10/90 |
| Repeat accuracy | [mm] | 0.1 | 0.1 |
| **OPTIONS and their characteristics** | | | |
| High-temperature version | | **39302132** | **39302133** |
| Min./max. ambient temperature | [°C] | -10/130 | -10/130 |

ⓘ Requirements to the evenness of the mountin g face (relating to the total gripper connection surface) less than 0.02 mm at an edge length of up to 100 mm / more than 0.05 mm at an edge length of more than 100 mm.

## Main view

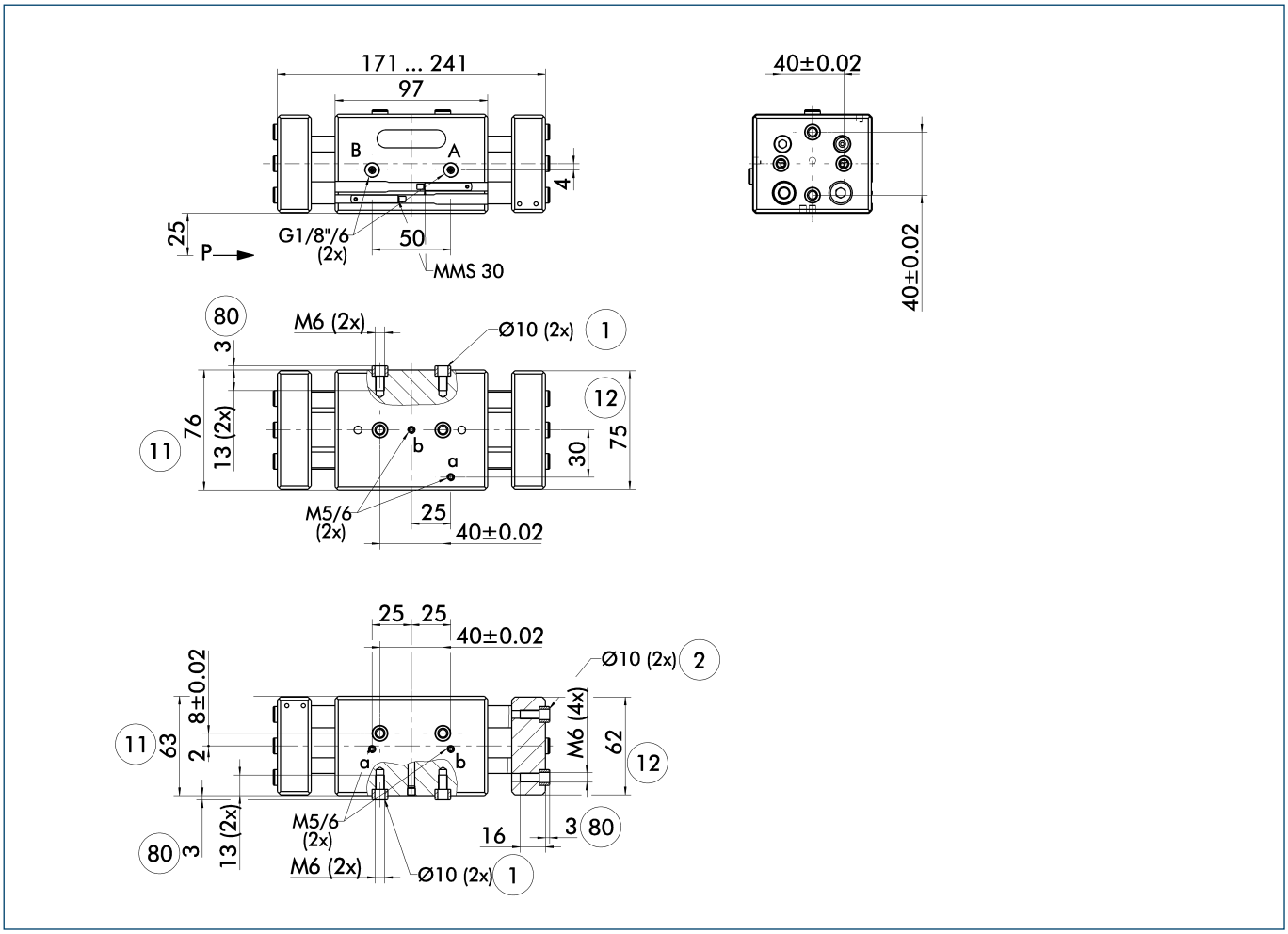


The drawing shows the gripper in the basic version with closed jaws, the dimensions do not include the options described below.

ⓘ The SDV-P pressure maintenance valve can be used as a gripping force maintenance device (see "Accessories" catalog section).

A, a Main/direct connection, gripper opening
B, b Main/direct connection, gripper closing
① Gripper connection
② Finger connection
⑪ Housing
⑫ Jaw
⑧⓪ Depth of the centering sleeve hole in the matching part

## Hose-free direct connection

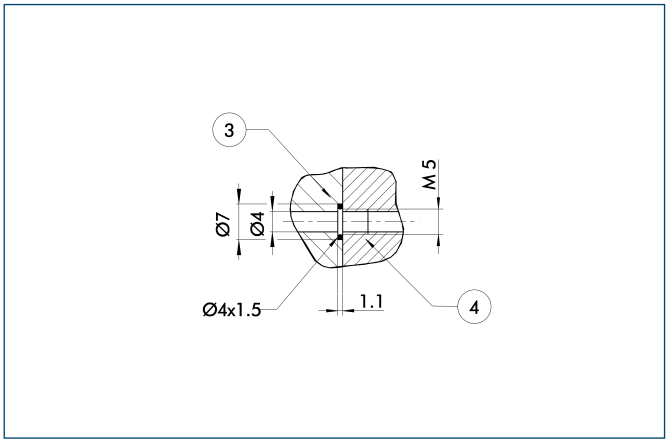


③ Adapter
④ Gripper

The direct connection is used for supplying compressed air without hoses. Instead, the pressure medium is fed through bore-holes in the mounting plate.

## Stroke versions

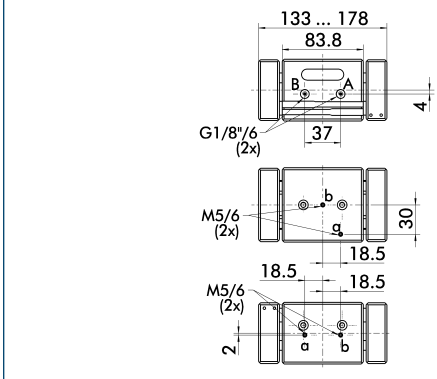


The drawing shows changes in dimensions of the versions with a differing stroke compared to the main view of the shown version.

## Intermediate Jaws

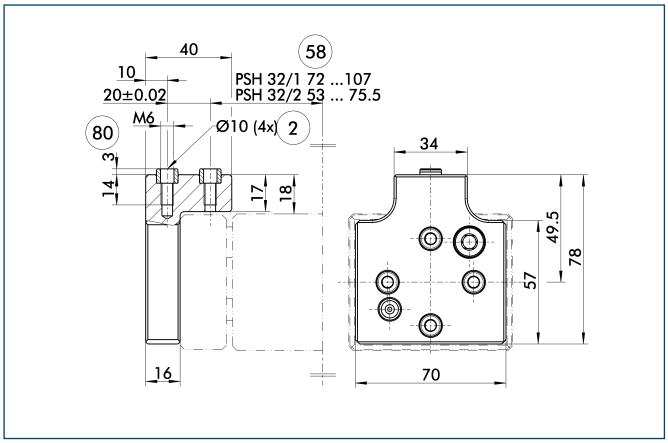


② Finger connection
⑤⑧ Distance from center of gripper
⑧⓪ Depth of the centering sleeve hole in the matching part

Optionally intermediate jaws can be used, enabling direct connection and alignment of top jaws and various standard accessories in Z-direction.

| Description | ID | Material | Scope of delivery |
|---|---|---|---|
| Intermediate Jaws | | | |
| ZBA-PSH-32 | **0300226** | Aluminum | 1 |

## Mounting kit for FPS

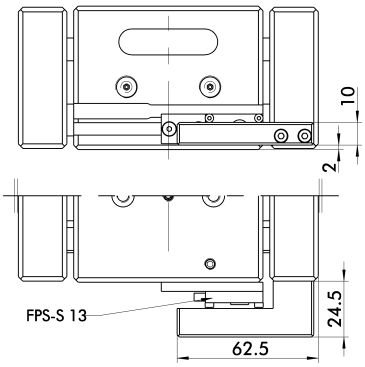


The FPS flexible position sensor can distinguish between five freely programmable ranges or switching points for the stroke of a gripper and can be used in conjunction with a PC as a measuring system.

| Description | ID |
|---|---|
| Mounting kit for FPS | |
| AS-PSH 32-2 | **0301738** |

ⓘ This mounting kit needs to be ordered optionally as an accessory.

You can find more detailed information and individual parts of the above-mentioned accessories in the “Accessories” catalog section.

## Electronic magnetic switches

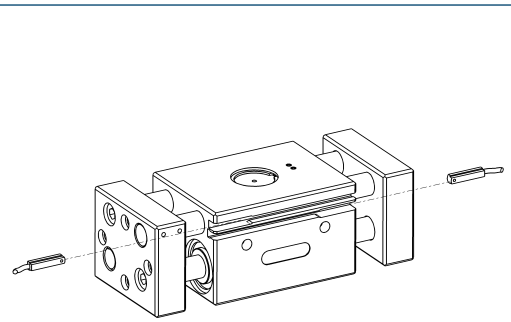

End position monitoring for mounting in the C-slot

| Description | ID | Recommended product |
|---|---|---|
| Electronic magnetic switches | | |
| MMS 30-S-M8-PNP | **0301471** | • |
| MMS 30-S-M12-PNP | **0301571** | |
| MMSK 30-S-PNP | **0301563** | |
| Connection cables | | |
| KA BG08-L 3P-0300-PNP | **0301622** | |
| KA BG08-L 3P-0500-PNP | **0301623** | |
| KA BG12-L 3P-0500-PNP | **30016369** | |
| KA BW08-L 3P-0300-PNP | **0301594** | |
| KA BW08-L 3P-0500-PNP | **0301502** | |
| Cable extensions | | |
| KV BG12-SG12 3P-0030-PNP | **0301999** | |
| KV BG12-SG12 3P-0060-PNP | **0301998** | |
| KV BW08-SG08 3P-0030-PNP | **0301495** | |
| KV BW08-SG08 3P-0100-PNP | **0301496** | |
| KV BW08-SG08 3P-0200-PNP | **0301497** | |
| KV BW12-SG12 3P-0030-PNP | **0301595** | |
| KV BW12-SG12 3P-0100-PNP | **0301596** | |
| KV BW12-SG12 3P-0200-PNP | **0301597** | |

ⓘ Two sensors (closer/NO) are required for each gripper, plus extension cables as an option.

ⓘ Please note the minimum permitted bending radii for the sensor cables, which are generally 35 mm.

## Mounting kit for proximity switch

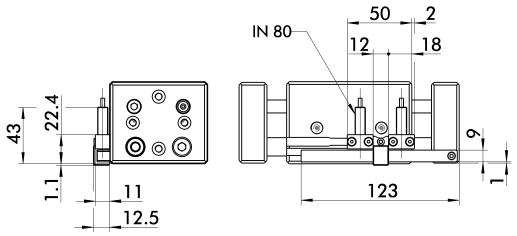


The mounting kit includes a bracket, switch cams and mounting screws. Proximity switches must be ordered separately.

| Description | ID |
|---|---|
| Mounting kit for proximity switch | |
| HG-PSH 32 | **0300756** |

ⓘ This mounting kit needs to be ordered optionally as an accessory.

You can find more detailed information and individual parts of the above-mentioned accessories in the “Accessories” catalog section.

## Inductive proximity switches

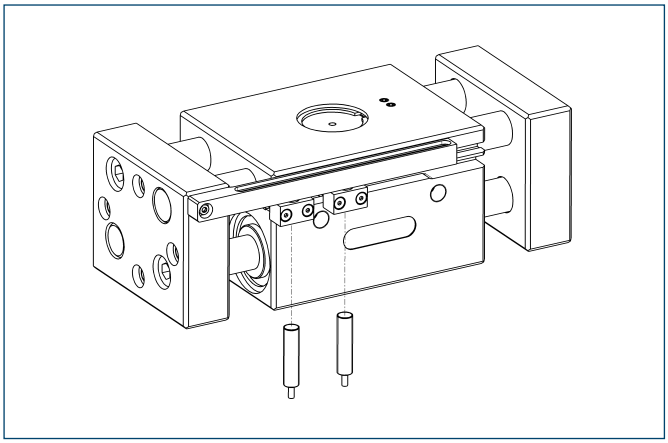

End position monitoring mounted with mounting kit

| Description | ID | Recommended product |
|---|---|---|
| Mounting kit for proximity switch | | |
| HG-PSH 32 | **0300756** | |
| Inductive proximity switches | | |
| IN 80-S-M8 | **0301478** | • |
| IN 80-S-M12 | **0301578** | |
| INK 80-S | **0301550** | |
| IN-C 80-S-M8 | **0301475** | |
| INK 80-SL | **0301579** | |

ⓘ Two sensors (closer/NO) are required for each gripper, plus extension cables as an option.
ⓘ This mounting kit needs to be ordered optionally as an accessory.
ⓘ Please note the minimum permitted bending radii for the sensor cables, which are generally 35 mm.

## Flexible Position Sensor

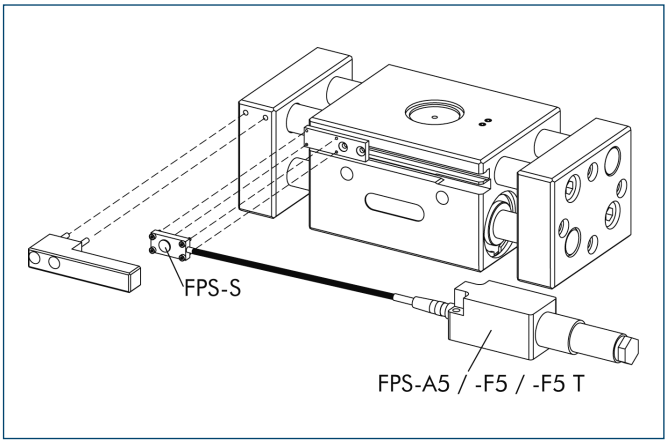


Flexible position monitoring of up to five positions

| Description | ID |
|---|---|
| Mounting kit for FPS | |
| AS-PSH 32-2 | **0301738** |
| Electronic Processor | |
| FPS-F5 | **0301805** |
| FPS-F5 T | **0301807** |
| Sensor | |
| FPS-S 13 | **0301705** |

ⓘ When using a FPS system, a FPS sensor (FPS-S) and a control unit (FPS-F5 / F5 T or A5) are required for each gripper as well as a mounting kit (AS), if listed. Cable extensions (KV) are available as options in the “Accessories” catalog section.

You can find more detailed information and individual parts of the above-mentioned accessories in the “Accessories” catalog section.

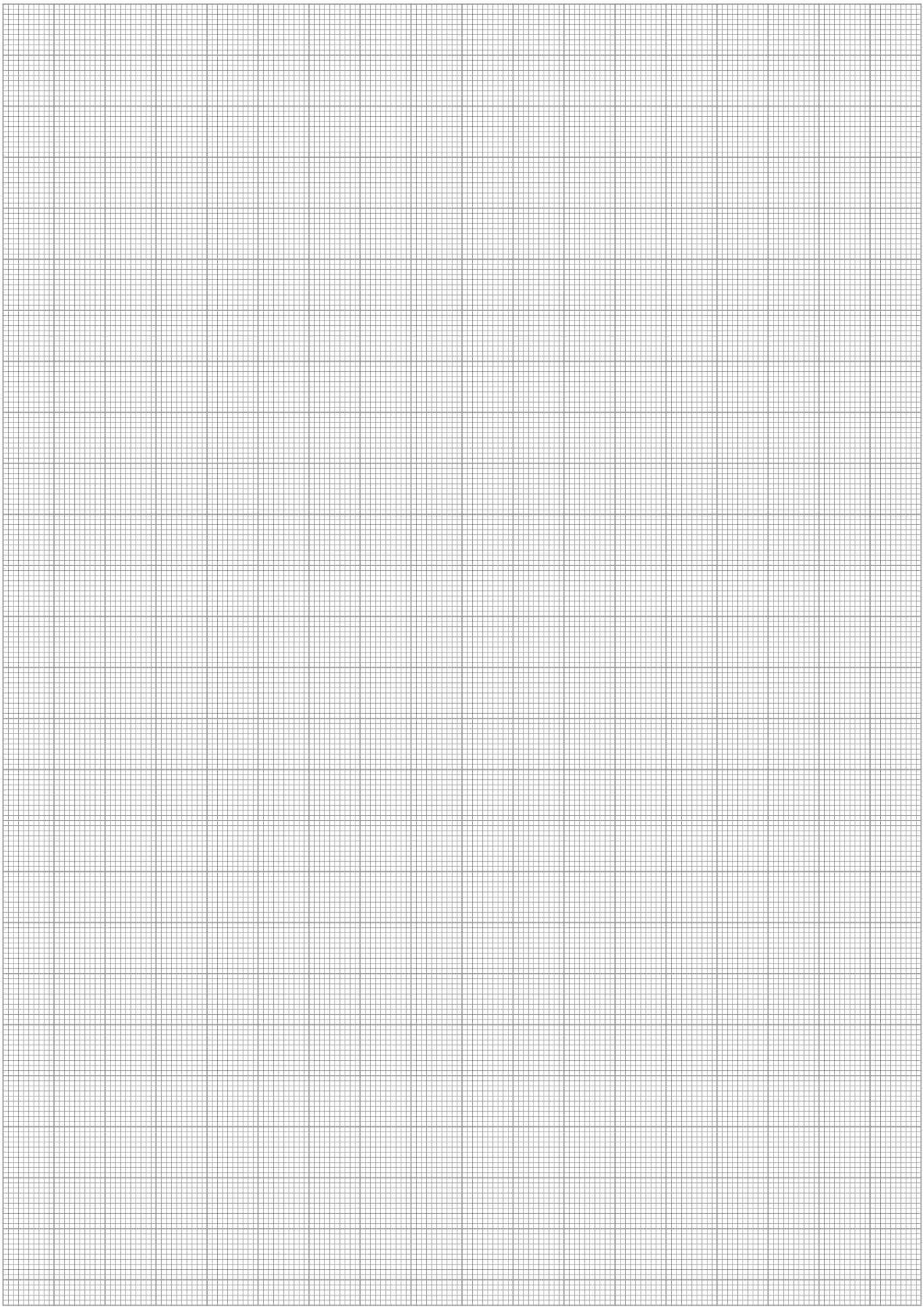

# PSH 42

**Pneumatic • 2-Finger Parallel Gripper • Long-stroke Gripper**

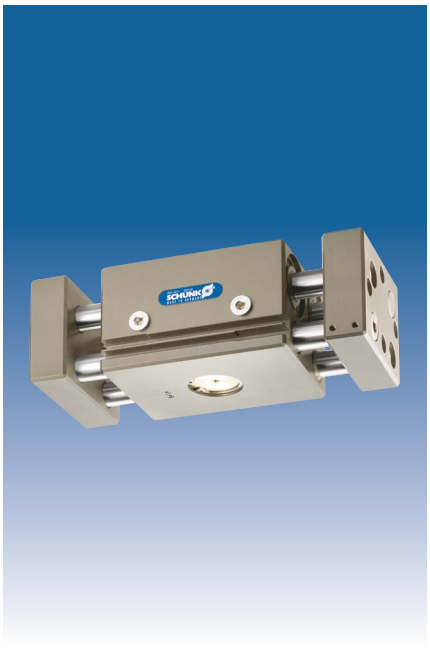

## Gripping force

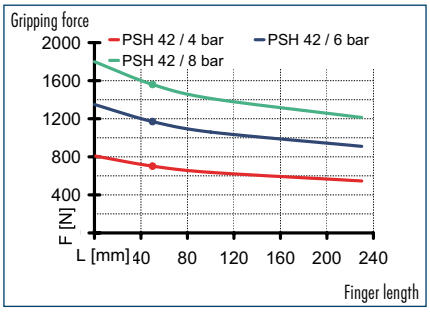


## Finger load

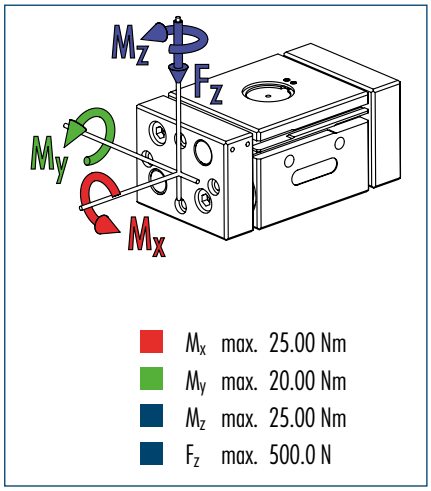


ⓘ The indicated moments and forces are static values, apply per base jaw and may occur simultaneously. $M_y$ may arise in addition to the moment generated by the gripping force itself. If the max. permitted finger weight is exceeded, it is imperative to throttle the air pressure so that the jaw movement occurs without any hitting or bouncing. Service life may be reduced.

## Technical data

| Description | | PSH 42-100 | PSH 42-1 | PSH 42-2 |
|---|---|---|---|---|
| **ID** | | **0302146** | **0302142** | **0302143** |
| Stroke per finger | [mm] | 100 | 50 | 29 |
| Closing force | [N] | 1170 | 1170 | 1170 |
| Opening force | [N] | 1170 | 1170 | 1170 |
| Weight | [kg] | 6.7 | 4.65 | 3.9 |
| Recommended workpiece weight | [kg] | 6 | 6 | 6 |
| Air consumption per double stroke | [$cm^3$] | 510 | 255 | 148 |
| Min./max. operating pressure | [bar] | 3/8 | 3/8 | 3/8 |
| Nominal operating pressure | [bar] | 6 | 6 | 6 |
| Closing/opening time | [s] | 0.5/0.5 | 0.25/0.25 | 0.15/0.15 |
| Max. permitted finger length | [mm] | 230 | 230 | 230 |
| Max. permitted weight per finger | [kg] | 2.5 | 2.5 | 2.5 |
| IP class | | 67 | 67 | 67 |
| Min./max. ambient temperature | [°C] | -10/90 | -10/90 | -10/90 |
| Repeat accuracy | [mm] | 0.05 | 0.05 | 0.05 |
| **OPTIONS and their characteristics** | | | | |
| High-temperature version | | **39302146** | **39302142** | **39302143** |
| Min./max. ambient temperature | [°C] | -10/130 | -10/130 | -10/130 |

ⓘ Requirements to the evenness of the mounting face (relating to the total gripper connection surface) less than 0.02 mm at an edge length of up to 100 mm / more than 0.05 mm at an edge length of more than 100 mm.

## Main view

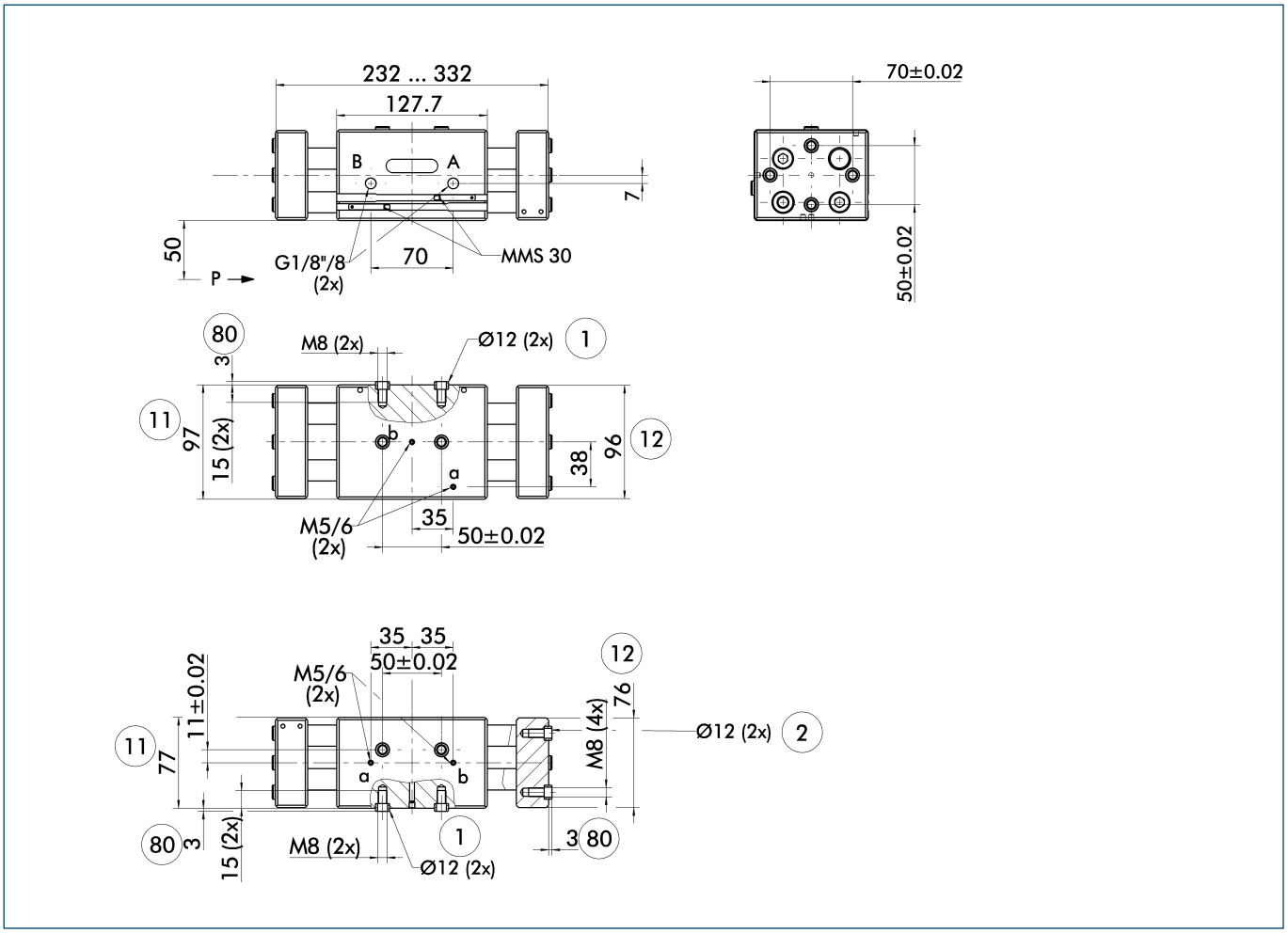


The drawing shows the gripper in the basic version with closed jaws, the dimensions do not include the options described below.

ⓘ The SDV-P pressure maintenance valve can be used as a gripping force maintenance device (see "Accessories" catalog section).

A, a Main/direct connection, gripper opening
B, b Main/direct connection, gripper closing
① Gripper connection
② Finger connection
⑪ Housing
⑫ Jaw
⑧⓪ Depth of the centering sleeve hole in the matching part

## Hose-free direct connection

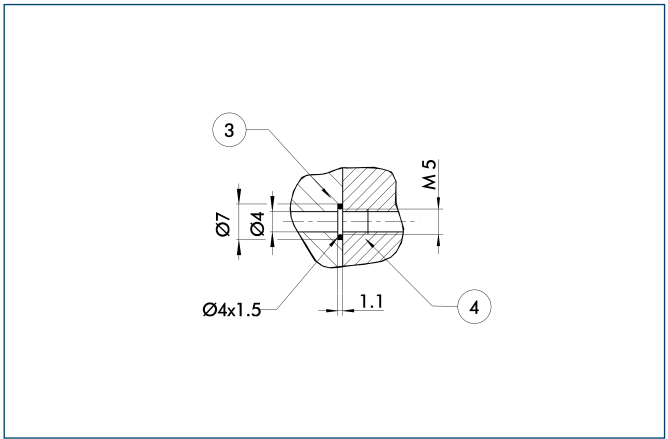


③ Adapter
④ Gripper

The direct connection is used for supplying compressed air without hoses. Instead, the pressure medium is fed through bore-holes in the mounting plate.

## Stroke versions

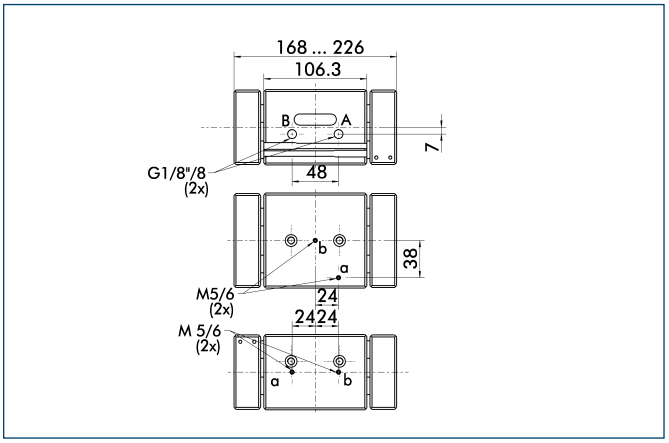


The drawing shows changes in dimensions of the versions with a differing stroke compared to the main view of the shown version.

## Stroke version PSH 42-100

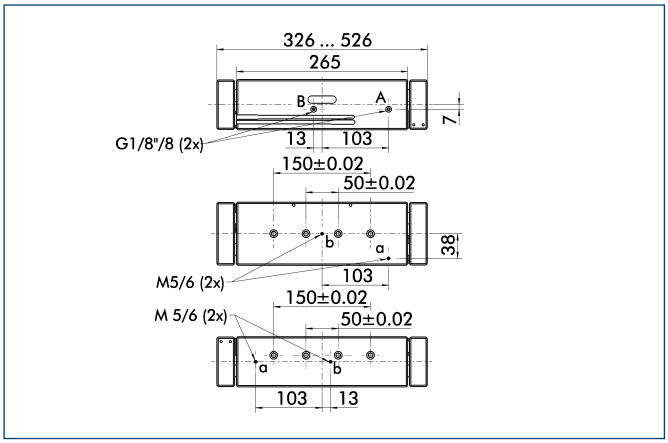


The drawing shows changes in dimensions of the versions with a differing stroke compared to the main view of the shown version.

## Intermediate Jaws

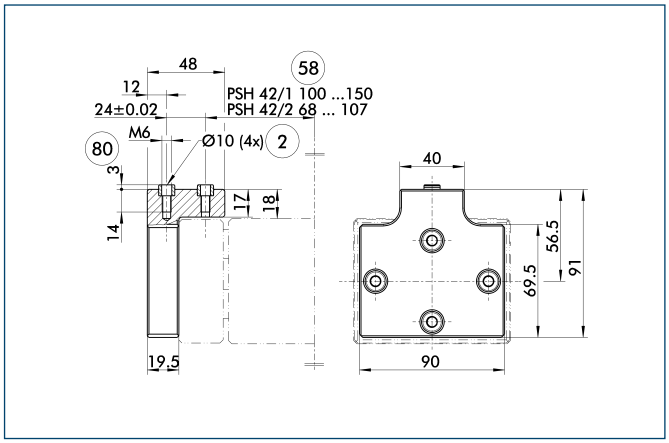


(2) Finger connection
(58) Distance from center of gripper
(80) Depth of the centering sleeve hole in the matching part

Optionally intermediate jaws can be used, enabling direct connection and alignment of top jaws and various standard accessories in Z-direction.

| Description | ID | Material | Scope of delivery |
|---|---|---|---|
| Intermediate Jaws | | | |
| ZBA-PSH-42 | **0300227** | Aluminum | 1 |

## Mounting kit for FPS

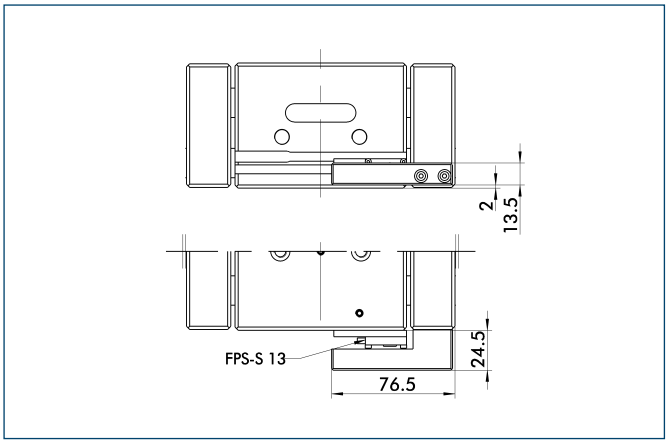


The FPS flexible position sensor can distinguish between five freely programmable ranges or switching points for the stroke of a gripper and can be used in conjunction with a PC as a measuring system.

| Description | ID |
|---|---|
| Mounting kit for FPS | |
| AS-PSH 42-2 | **0301739** |

ⓘ This mounting kit needs to be ordered optionally as an accessory.

You can find more detailed information and individual parts of the above-mentioned accessories in the “Accessories” catalog section.

## Electronic magnetic switches

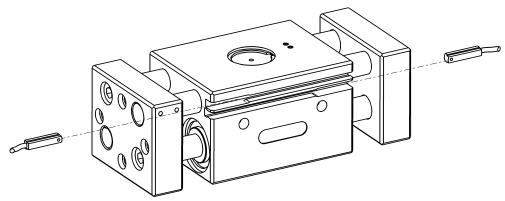

End position monitoring for mounting in the C-slot

| Description | ID | Recommended product |
|---|---|---|
| Electronic magnetic switches | | |
| MMS 30-S-M8-PNP | **0301471** | • |
| MMS 30-S-M12-PNP | **0301571** | |
| MMSK 30-S-PNP | **0301563** | |
| Connection cables | | |
| KA BG08-L 3P-0300-PNP | **0301622** | |
| KA BG08-L 3P-0500-PNP | **0301623** | |
| KA BG12-L 3P-0500-PNP | **30016369** | |
| KA BW08-L 3P-0300-PNP | **0301594** | |
| KA BW08-L 3P-0500-PNP | **0301502** | |
| Cable extensions | | |
| KV BG12-SG12 3P-0030-PNP | **0301999** | |
| KV BG12-SG12 3P-0060-PNP | **0301998** | |
| KV BW08-SG08 3P-0030-PNP | **0301495** | |
| KV BW08-SG08 3P-0100-PNP | **0301496** | |
| KV BW08-SG08 3P-0200-PNP | **0301497** | |
| KV BW12-SG12 3P-0030-PNP | **0301595** | |
| KV BW12-SG12 3P-0100-PNP | **0301596** | |
| KV BW12-SG12 3P-0200-PNP | **0301597** | |

ⓘ Two sensors (closer/NO) are required for each gripper, plus extension cables as an option.

ⓘ Please note the minimum permitted bending radii for the sensor cables, which are generally 35 mm.

## Mounting kit for proximity switch

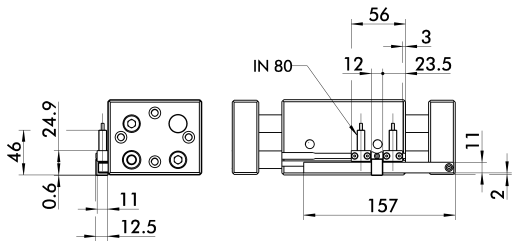


| Description | ID |
|---|---|
| Mounting kit for proximity switch | |
| HG-PSH 42 | **0300757** |

ⓘ This mounting kit needs to be ordered optionally as an accessory.

You can find more detailed information and individual parts of the above-mentioned accessories in the “Accessories” catalog section.

## Inductive proximity switches

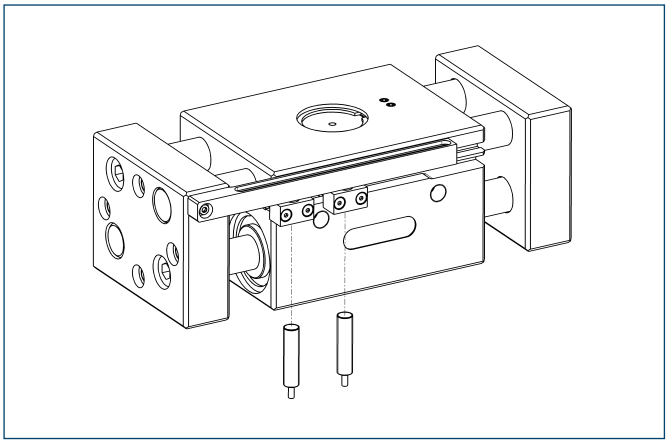

End position monitoring mounted with mounting kit

| Description | ID | Recommended product |
|---|---|---|
| Mounting kit for proximity switch | | |
| HG-PSH 42 | **0300757** | |
| Inductive proximity switches | | |
| IN 80-S-M8 | **0301478** | • |
| IN 80-S-M12 | **0301578** | |
| INK 80-S | **0301550** | |
| IN-C 80-S-M8 | **0301475** | |
| INK 80-SL | **0301579** | |

ⓘ Two sensors (closer/NO) are required for each gripper, plus extension cables as an option.
ⓘ This mounting kit needs to be ordered optionally as an accessory.
ⓘ Please note the minimum permitted bending radii for the sensor cables, which are generally 35 mm.

## Flexible Position Sensor

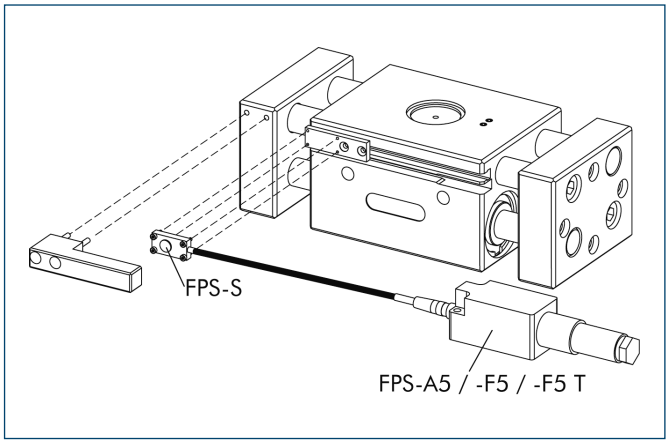


Flexible position monitoring of up to five positions

| Description | ID |
|---|---|
| Mounting kit for FPS | |
| AS-PSH 42-2 | **0301739** |
| Electronic Processor | |
| FPS-F5 | **0301805** |
| FPS-F5 T | **0301807** |
| Sensor | |
| FPS-S 13 | **0301705** |

ⓘ When using a FPS system, a FPS sensor (FPS-S) and a control unit (FPS-F5 / F5 T or A5) are required for each gripper as well as a mounting kit (AS), if listed. Cable extensions (KV) are available as options in the “Accessories” catalog section.

You can find more detailed information and individual parts of the above-mentioned accessories in the “Accessories” catalog section.

# PSH 52

**Pneumatic • 2-Finger Parallel Gripper • Long-stroke Gripper**

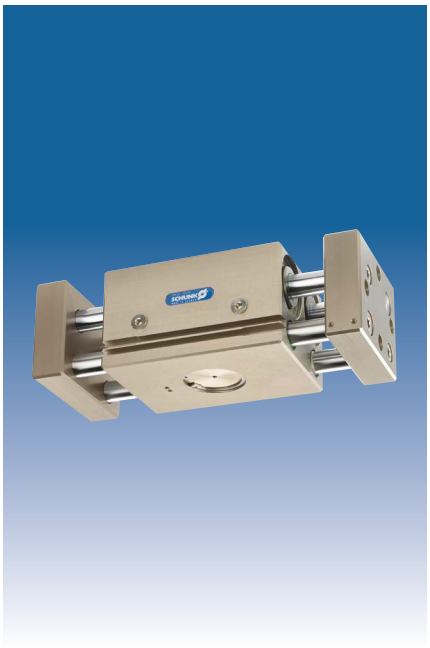

## Gripping force

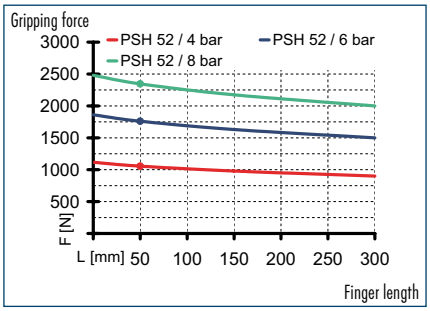


## Finger load

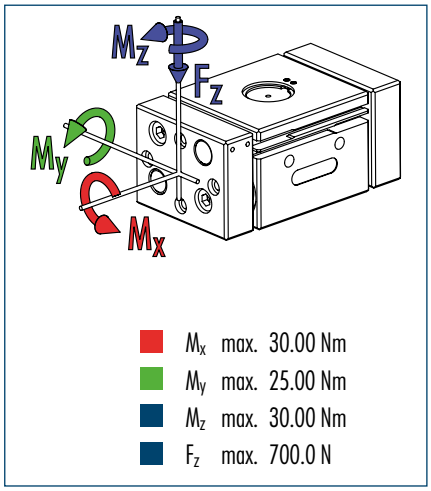


ⓘ The indicated moments and forces are static values, apply per base jaw and may occur simultaneously. $M_y$ may arise in addition to the moment generated by the gripping force itself. If the max. permitted finger weight is exceeded, it is imperative to throttle the air pressure so that the jaw movement occurs without any hitting or bouncing. Service life may be reduced.

## Technical data

| Description | | PSH 52-1 |
|---|---|---|
| **ID** | | **0302152** |
| Stroke per finger | [mm] | 64 |
| Closing force | [N] | 1760 |
| Opening force | [N] | 1760 |
| Weight | [kg] | 8.05 |
| Recommended workpiece weight | [kg] | 8.8 |
| Air consumption per double stroke | [cm³] | 504 |
| Min./max. operating pressure | [bar] | 3/8 |
| Nominal operating pressure | [bar] | 6 |
| Closing/opening time | [s] | 0.4/0.4 |
| Max. permitted finger length | [mm] | 300 |
| Max. permitted weight per finger | [kg] | 3.5 |
| IP class | | 67 |
| Min./max. ambient temperature | [°C] | -10/90 |
| Repeat accuracy | [mm] | 0.05 |
| **OPTIONS and their characteristics** | | |
| High-temperature version | | **39302152** |
| Min./max. ambient temperature | [°C] | -10/130 |

ⓘ Requirements to the evenness of the mounting face (relating to the total gripper connection surface) less than 0.02 mm at an edge length of up to 100 mm / more than 0.05 mm at an edge length of more than 100 mm.

## Main view

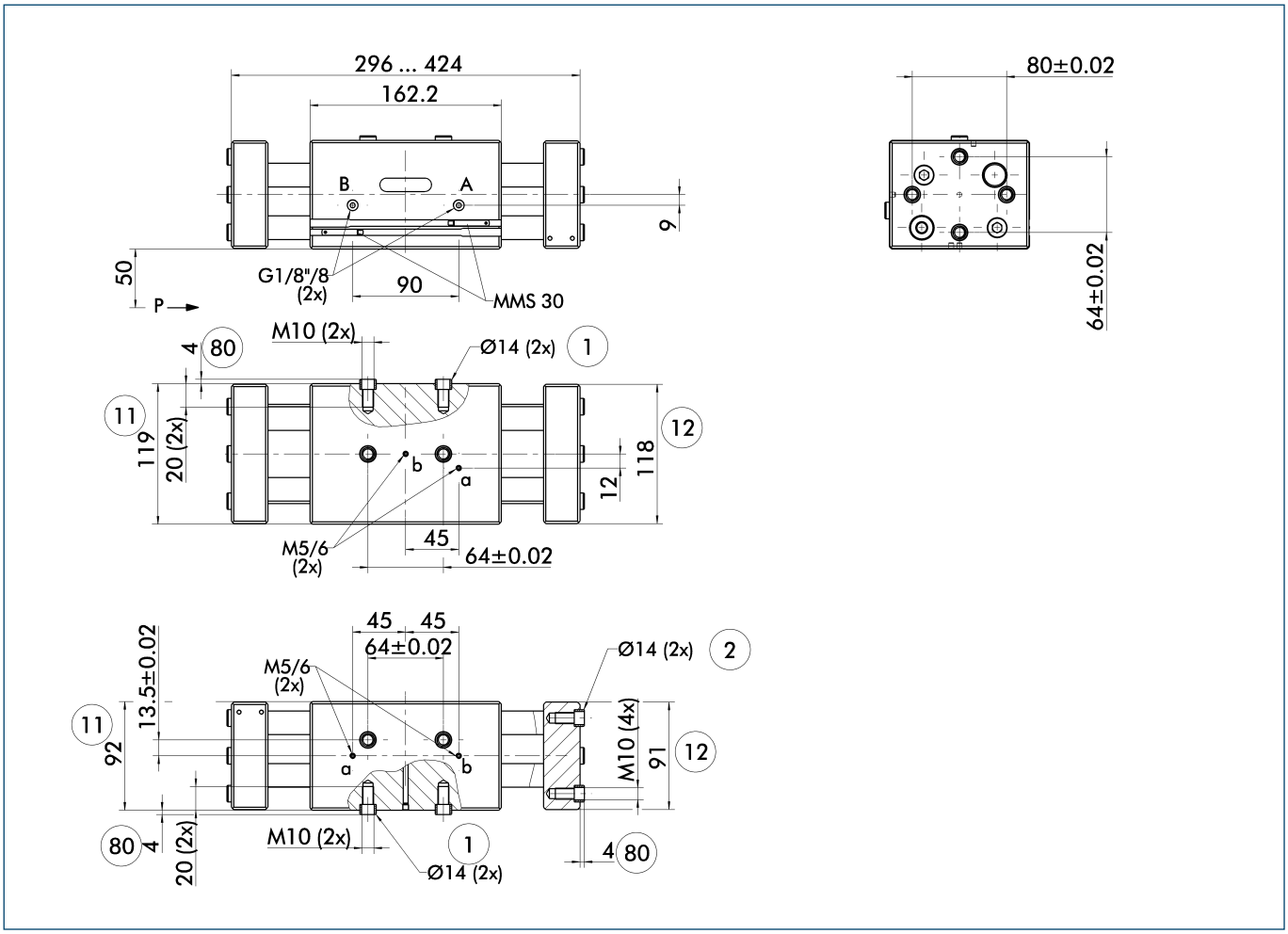


The drawing shows the gripper in the basic version with closed jaws, the dimensions do not include the options described below.

ⓘ The SDV-P pressure maintenance valve can be used as a gripping force maintenance device (see "Accessories" catalog section).

A, a Main/direct connection, gripper opening
B, b Main/direct connection, gripper closing
① Gripper connection
② Finger connection
⑪ Housing
⑫ Jaw
⑧⓪ Depth of the centering sleeve hole in the matching part

## Hose-free direct connection

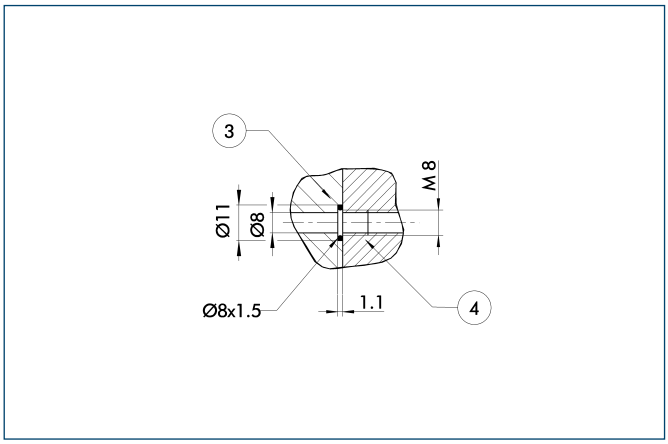


③ Adapter
④ Gripper

The direct connection is used for supplying compressed air without hoses. Instead, the pressure medium is fed through bore-holes in the mounting plate.

## Intermediate Jaws

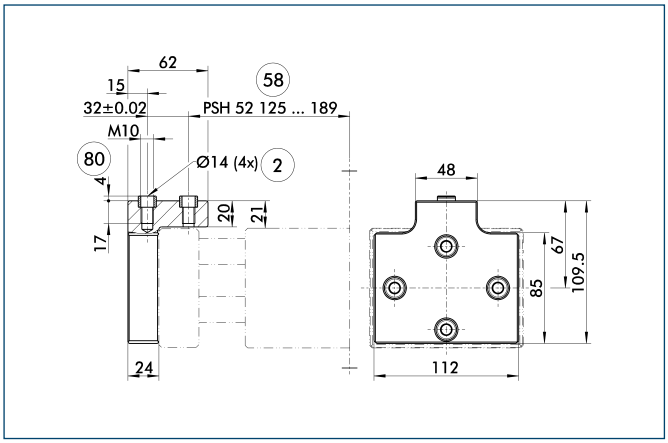


(2) Finger connection
(58) Distance from center of gripper
(80) Depth of the centering sleeve hole in the matching part

Optionally intermediate jaws can be used, enabling direct connection and alignment of top jaws and various standard accessories in Z-direction.

| Description | ID | Material | Scope of delivery |
|---|---|---|---|
| Intermediate Jaws | | | |
| ZBA-PSH-52 | **0300228** | Aluminum | 1 |

## Electronic magnetic switches

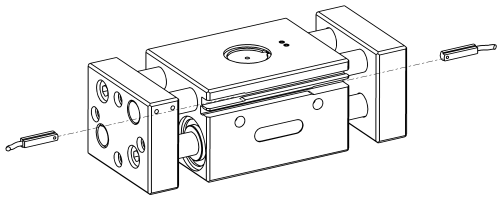

End position monitoring for mounting in the C-slot

| Description | ID | Recommended product |
|---|---|---|
| Electronic magnetic switches | | |
| MMS 30-S-M8-PNP | **0301471** | • |
| MMS 30-S-M12-PNP | **0301571** | |
| MMSK 30-S-PNP | **0301563** | |
| Connection cables | | |
| KA BG08-L 3P-0300-PNP | **0301622** | |
| KA BG08-L 3P-0500-PNP | **0301623** | |
| KA BG12-L 3P-0500-PNP | **30016369** | |
| KA BW08-L 3P-0300-PNP | **0301594** | |
| KA BW08-L 3P-0500-PNP | **0301502** | |
| Cable extensions | | |
| KV BG12-SG12 3P-0030-PNP | **0301999** | |
| KV BG12-SG12 3P-0060-PNP | **0301998** | |
| KV BW08-SG08 3P-0030-PNP | **0301495** | |
| KV BW08-SG08 3P-0100-PNP | **0301496** | |
| KV BW08-SG08 3P-0200-PNP | **0301497** | |
| KV BW12-SG12 3P-0030-PNP | **0301595** | |
| KV BW12-SG12 3P-0100-PNP | **0301596** | |
| KV BW12-SG12 3P-0200-PNP | **0301597** | |

ⓘ Two sensors (closer/NO) are required for each gripper, plus extension cables as an option.
ⓘ Please note the minimum permitted bending radii for the sensor cables, which are generally 35 mm.

You can find more detailed information and individual parts of the above-mentioned accessories in the “Accessories” catalog section.

## Mounting kit for proximity switch

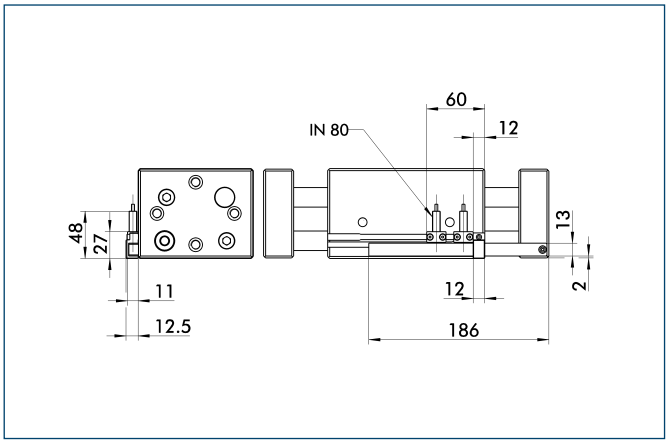


The mounting kit includes a bracket, switch cams and mounting screws. Proximity switches must be ordered separately.

| Description | ID |
|---|---|
| Mounting kit for proximity switch | |
| HG-PSH 52 | **0300759** |

ⓘ This mounting kit needs to be ordered optionally as an accessory.

## Inductive proximity switches

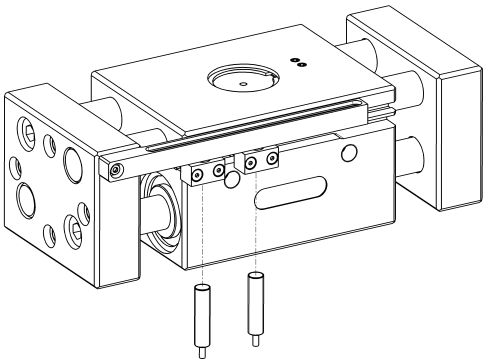

End position monitoring mounted with mounting kit

| Description | ID | Recommended product |
|---|---|---|
| Mounting kit for proximity switch | | |
| HG-PSH 52 | **0300759** | |
| Inductive proximity switches | | |
| IN 80-S-M8 | **0301478** | • |
| IN 80-S-M12 | **0301578** | |
| INK 80-S | **0301550** | |
| IN-C 80-S-M8 | **0301475** | |
| INK 80-SL | **0301579** | |

ⓘ Two sensors (closer/NO) are required for each gripper, plus extension cables as an option.
ⓘ This mounting kit needs to be ordered optionally as an accessory.
ⓘ Please note the minimum permitted bending radii for the sensor cables, which are generally 35 mm.

You can find more detailed information and individual parts of the above-mentioned accessories in the “Accessories” catalog section.

# SPG





**Size**
100




**Weight**
35 kg

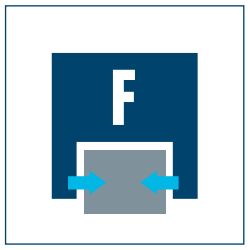


**Gripping force**
10000 N

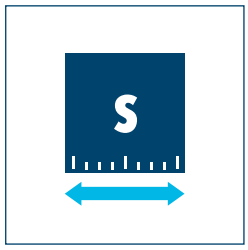


**Stroke per finger**
100 mm




**Workpiece weight**
50 kg

## Application example

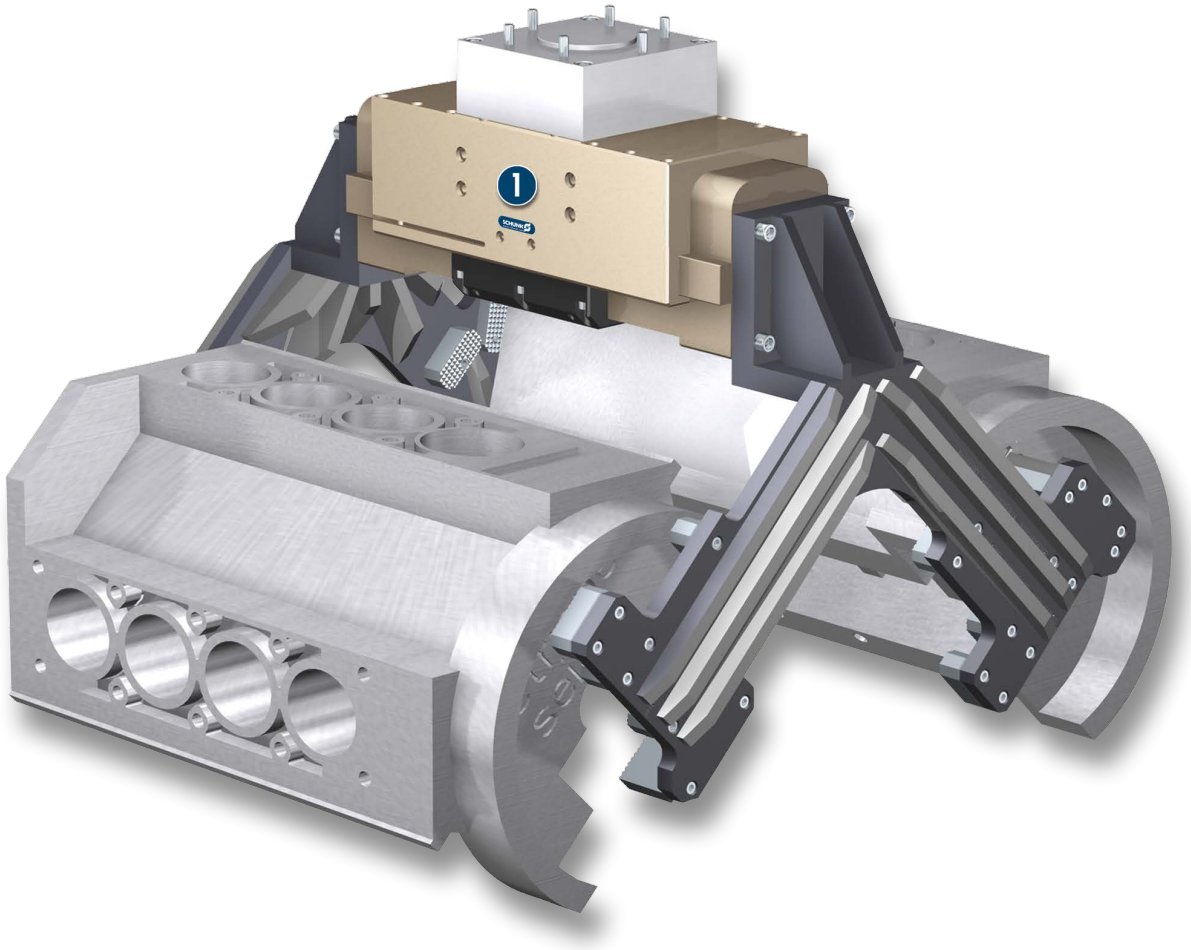


**Gripper unit for heavy V8 motors**

1 **2-Finger Heavy-load Gripper SPG**

## Heavy-load Gripper

Sturdy 2-finger parallel gripper for heavy components and a broad part range, equipped with robust guidances and therefore suitable for high gripping forces and maximum moment loads.

## Field of application

suitable for clean working environments, covers a broad range of parts thanks to its long jaw stroke and high gripping forces for heavy workpieces



## Your advantages and benefits

**Robust guidance**
for precise handling

**High maximum moments possible**
suitable for using long gripper fingers

**High efficiency**
through direct drive

**Mounting from three sides in three screw directions possible**
for universal and flexible gripper assembly

**Air supply via hose-free direct connection or screw connections**
for the flexible supply of compressed air in all automation systems

## General note to the series

**Housing material**
Aluminum alloy, hard-anodized

**Base jaw material**
Aluminum alloy, hard-anodized

**Actuation**
pneumatic, with filtered compressed air (10 microns): dry, lubricated or non-lubricated
Pressure medium: Required quality class of compressed air according to DIN ISO 8573-1: 6 4 4

**Warranty**
24 months (details, general terms and conditions and operation manuals can be downloaded under www.schunk.com)

**Scope of delivery**
Centering sleeves, cupped-type lubricating nipples, O-rings for direct connection, assembly and operating manual with manufacturer's declaration

**Gripping force maintenance device**
with integrated pressure maintenance valve for version with ID 0302120, external pressure maintenance valve can be retrofitted in the version with ID 0302121

## Sectional diagram

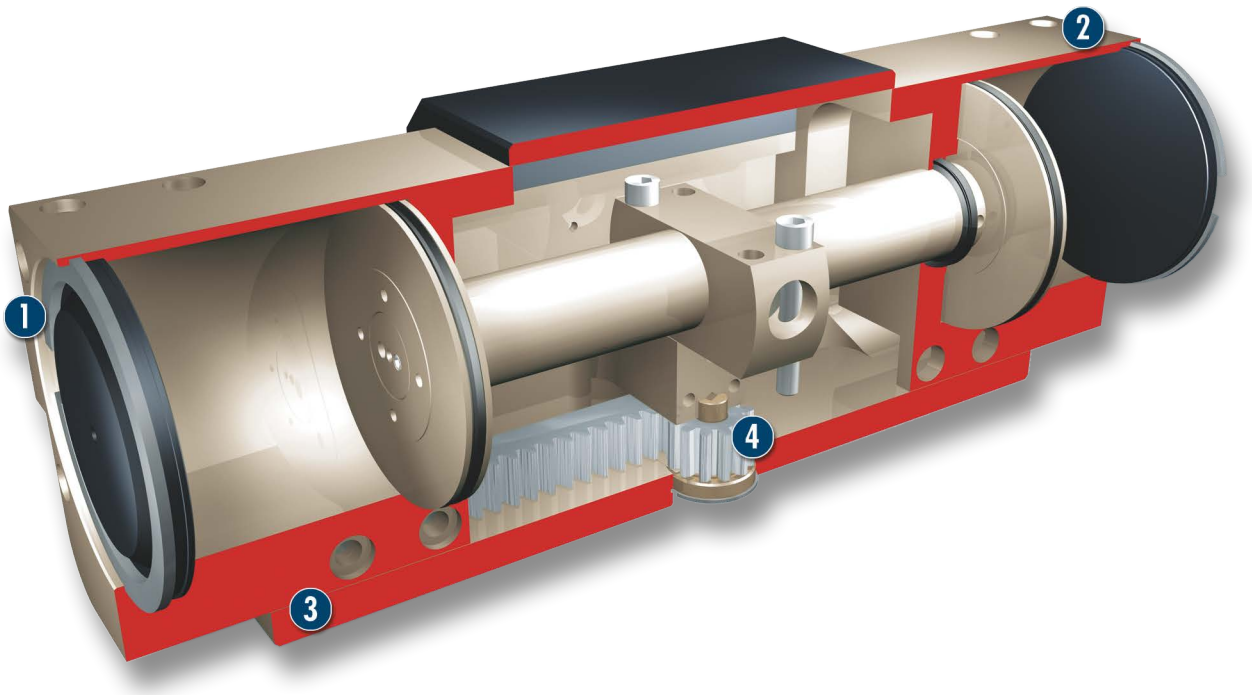


1 **Guidance**
precise gripping due to the use of a highly loadable guidance with minimum play

2 **Base jaw**
for the connection of workpiece-specific gripper fingers

3 **Housing**
weight-optimized through application of hard-anodized, high-strength aluminum alloy

4 **Kinematics**
pinion and rack principle for centric clamping, even at large strokes

## Functional description

The aligned base jaws are actuated with compressed air directly by the fixed piston, which opens and closes them.
The base jaws are synchronized by the rack and pinion kinematics.
The direct flow of force enables a high degree of efficiency and therefore very high gripping forces.

## Options and special information

Two TM6 lubricating nipples on either side for relubricating the base jaws and purge air connections are already provided.

### Gripping force maintenance device

The SPG 100 (ID 0302121) with reduced opening and closing times of 1.5 s does not feature an integrated pressure maintenance valve as a gripping force safety device.

## Accessories

Accessories from SCHUNK – the suitable supplement for maximum functionality, reliability and performance of all automation modules.

### Centering sleeves



### Fittings



### Magnetic Switches



### Inductive proximity switches



### Plastic inserts



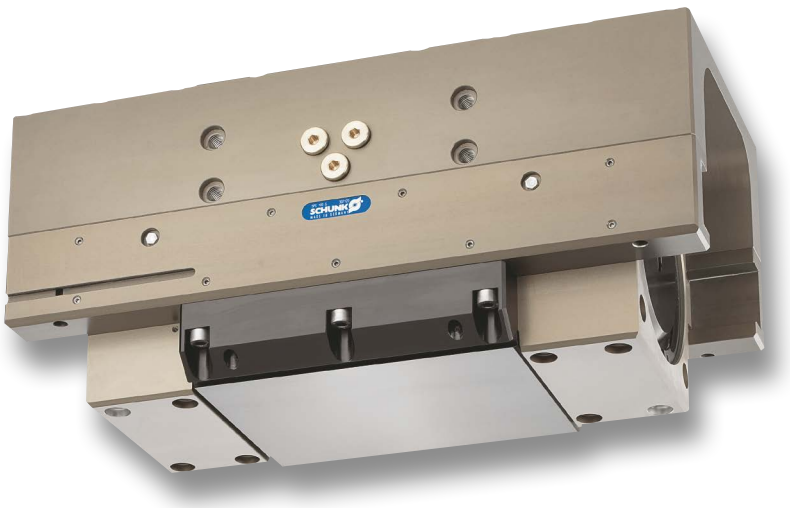

### Sensor cables



### Gripper pads

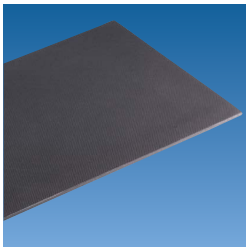

### Sensor Distributor

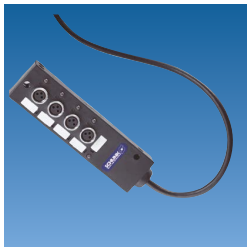

### Pressure maintenance valve



ⓘ For the exact size of the required accessories, availability of this size and the designation and ID, please refer to the additional views at the end of the size in question. You will find more detailed information on our accessory range in the “Accessories” catalog section.

## General note to the series

### Gripping force

is the arithmetic total of the gripping force applied to each finger at distance P (see illustration) measured from the upper edge of the gripper.

### Finger length

The finger length is measured from the upper edge of the gripper housing in the direction of the main axis.

### Repeat accuracy

is defined as the spread of the limit position after 100 consecutive strokes.

### Workpiece weight

The recommended workpiece weight is calculated for a force-type connection with a coefficient of friction of 0.1 and a safety factor of 2 against slippage of the workpiece on acceleration due to gravity g. Considerably heavier workpiece weights are permitted with form-fit gripping.

### Closing and opening times

Closing and opening times are purely the times that the base jaws or fingers are in motion. Valve switching times, hose filling times or PLC reaction times are not included in the above times and must be taken into consideration when determining cycle times.

# SPG 100

**Pneumatic • 2-Finger Parallel Gripper • Heavy-load Gripper**



## Gripping force, I.D. gripping

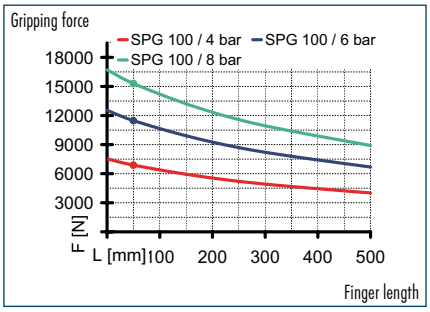


## Gripping force, O.D. gripping

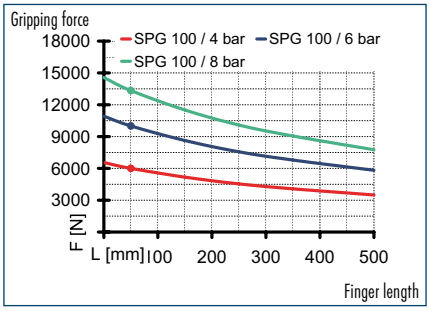


## Finger load

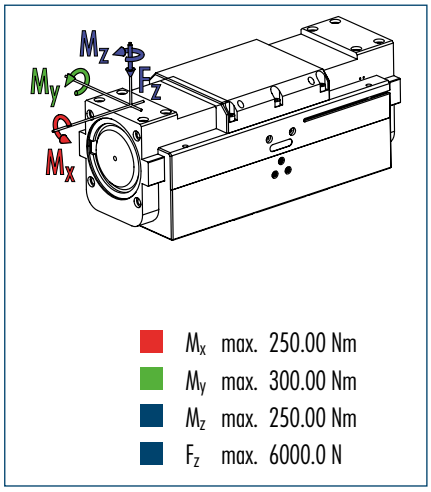


ⓘ The indicated moments and forces are static values, apply per base jaw and may occur simultaneously. $M_y$ may arise in addition to the moment generated by the gripping force itself. If the max. permitted finger weight is exceeded, it is imperative to throttle the air pressure so that the jaw movement occurs without any hitting or bouncing. Service life may be reduced.

## Technical data

| Description | | SPG 100 | SPG 100-SDV-P |
|---|---|---|---|
| ID | | 0302121 | 0302120 |
| Stroke per finger | [mm] | 100 | 100 |
| Closing force | [N] | 10000 | 10000 |
| Opening force | [N] | 11480 | 11480 |
| Weight | [kg] | 35 | 35 |
| Recommended workpiece weight | [kg] | 50 | 50 |
| Air consumption per double stroke | [cm³] | 4600 | 4600 |
| Min./max. operating pressure | [bar] | 2/8 | 2/8 |
| Nominal operating pressure | [bar] | 6 | 6 |
| Closing/opening time | [s] | 1.5/1.5 | 3/3 |
| Max. permitted finger length | [mm] | 500 | 500 |
| Max. permitted weight per finger | [kg] | 15 | 15 |
| IP class | | 30 | 30 |
| Min./max. ambient temperature | [°C] | -10/90 | -10/90 |
| Repeat accuracy | [mm] | 0.1 | 0.1 |

ⓘ The closing and opening times can be further reduced by fitting rapid deaeration valves to the air connections. However, care must be taken to ensure that the jaw motion occurs without any hitting or bouncing.

## Main view

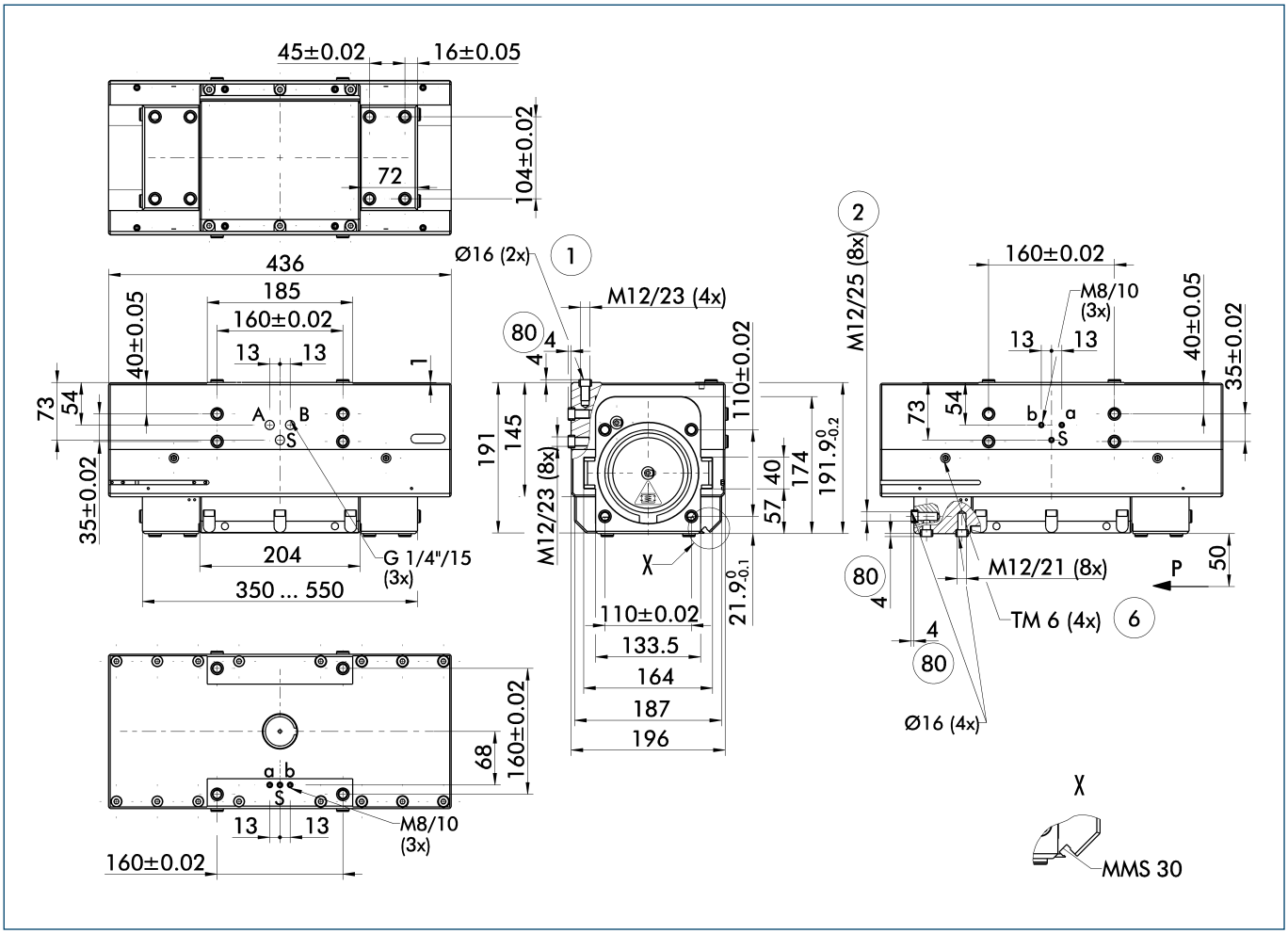


The drawing shows the gripper in the basic version with closed jaws, the dimensions do not include the options described below.

ⓘ The SDV-P pressure maintenance valve can be used as a gripping force maintenance device (see "Accessories" catalog section).

A, a Main/direct connection, gripper opening
B, b Main/direct connection, gripper closing
S Air purge connection
① Gripper connection
② Finger connection
⑥ Lubricating nipple connection
(80) Depth of the centering sleeve hole in the matching part

## Hose-free direct connection

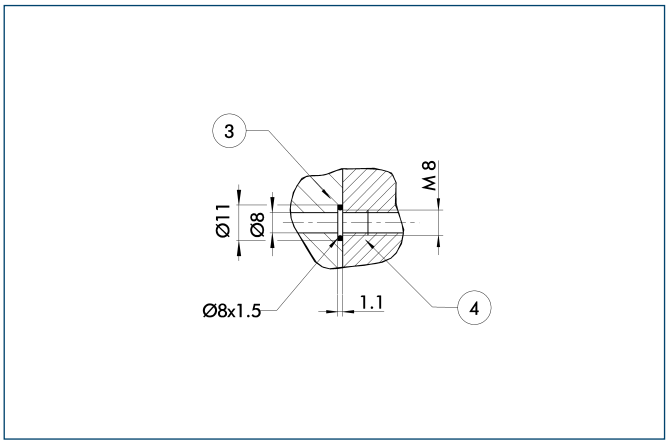


③ Adapter
④ Gripper

The direct connection is used for supplying compressed air without hoses. Instead, the pressure medium is fed through bore-holes in the mounting plate.

## Electronic magnetic switches

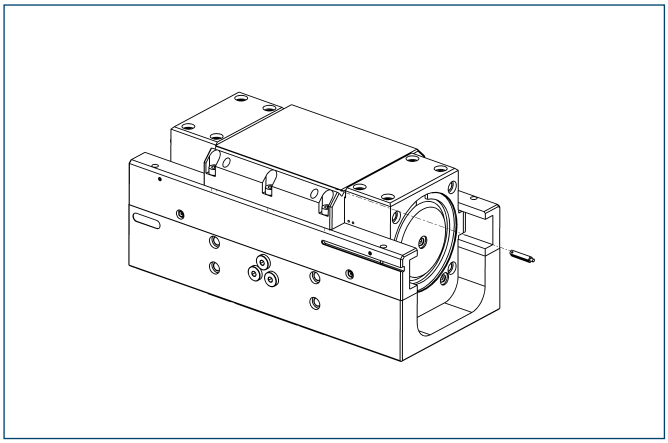

End position monitoring for mounting in the C-slot

| Description | ID | Recommended product |
|---|---|---|
| Electronic magnetic switches | | |
| MMS 30-S-M8-PNP | **0301471** | • |
| MMS 30-S-M12-PNP | **0301571** | |
| MMSK 30-S-PNP | **0301563** | |
| Connection cables | | |
| KA BG08-L 3P-0300-PNP | **0301622** | |
| KA BG08-L 3P-0500-PNP | **0301623** | |
| KA BG12-L 3P-0500-PNP | **30016369** | |
| KA BW08-L 3P-0300-PNP | **0301594** | |
| KA BW08-L 3P-0500-PNP | **0301502** | |
| Cable extensions | | |
| KV BG12-SG12 3P-0030-PNP | **0301999** | |
| KV BG12-SG12 3P-0060-PNP | **0301998** | |
| KV BW08-SG08 3P-0030-PNP | **0301495** | |
| KV BW08-SG08 3P-0100-PNP | **0301496** | |
| KV BW08-SG08 3P-0200-PNP | **0301497** | |
| KV BW12-SG12 3P-0030-PNP | **0301595** | |
| KV BW12-SG12 3P-0100-PNP | **0301596** | |
| KV BW12-SG12 3P-0200-PNP | **0301597** | |

ⓘ Two sensors (closer/NO) are required for each gripper, plus extension cables as an option.

ⓘ Please note the minimum permitted bending radii for the sensor cables, which are generally 35 mm.

## Mounting kit for proximity switch

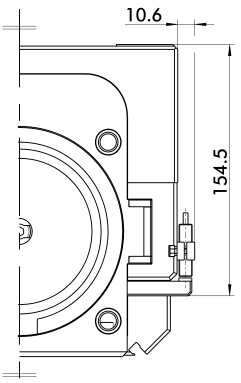


The mounting kit includes a bracket, switch cams and mounting screws. Proximity switches must be ordered separately.

| Description | ID |
|---|---|
| Mounting kit for proximity switch | |
| HG-SPG 100 | **0300765** |

ⓘ This mounting kit needs to be ordered optionally as an accessory.

You can find more detailed information and individual parts of the above-mentioned accessories in the “Accessories” catalog section.

## Inductive proximity switches

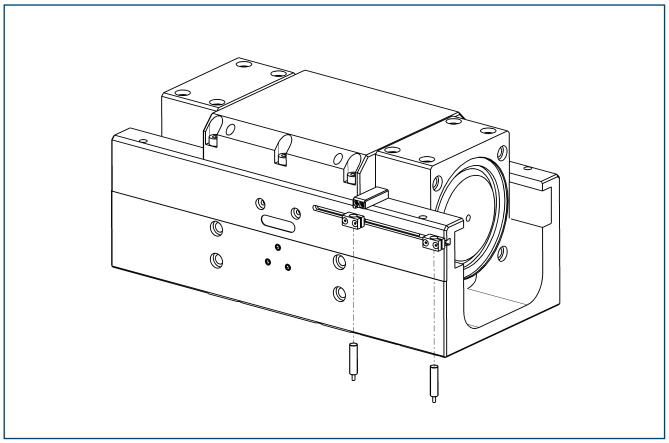

End position monitoring mounted with mounting kit

| Description | ID | Recommended product |
|---|---|---|
| Mounting kit for proximity switch | | |
| HG-SPG 100 | **0300765** | |
| Inductive proximity switches | | |
| IN 80-S-M8 | **0301478** | • |
| IN 80-S-M12 | **0301578** | |
| INK 80-S | **0301550** | |
| IN-C 80-S-M8 | **0301475** | |
| INK 80-SL | **0301579** | |

ⓘ Two sensors (closer/NO) are required for each gripper, plus extension cables as an option.
ⓘ This mounting kit needs to be ordered optionally as an accessory.
ⓘ Please note the minimum permitted bending radii for the sensor cables, which are generally 35 mm.

You can find more detailed information and individual parts of the above-mentioned accessories in the “Accessories” catalog section.

# Pneumatic Gripping Modules

## Pneumatic • 3-Finger Centric Gripper



3-FINGER CENTRIC GRIPPER


| Series | Size | Page |
|---|---|---|
| **Gripper for small components** | | |
| MPZ | | 562 |
| MPZ | 16 | 566 |
| MPZ | 20 | 570 |
| MPZ | 25 | 574 |
| MPZ | 30 | 578 |
| MPZ | 38 | 582 |
| MPZ | 45 | 586 |
| **Universal Gripper** | | |
| LGZ | | 590 |
| LGZ | 16 | 594 |
| LGZ | 32 | 596 |
| LGZ | 50 | 598 |
| PZN-plus | | 600 |
| PZN-plus | 40 | 604 |
| PZN-plus | 50 | 610 |
| PZN-plus | 64 | 618 |
| PZN-plus | 80 | 628 |
| PZN-plus | 100 | 638 |
| PZN-plus | 125 | 648 |
| PZN-plus | 160 | 658 |
| PZN-plus | 200 | 668 |
| PZN-plus | 240 | 676 |
| PZN-plus | 300 | 684 |
| JGZ | | 690 |
| JGZ | 40 | 694 |
| JGZ | 50 | 700 |
| JGZ | 64 | 706 |
| JGZ | 80 | 714 |
| JGZ | 100 | 722 |
| JGZ | 125 | 730 |
| JGZ | 160 | 738 |
| PZB-plus | | 746 |
| PZB-plus | 50 | 750 |
| PZB-plus | 64 | 754 |
| PZB-plus | 80 | 760 |
| PZB-plus | 100 | 768 |
| PZB-plus | 125 | 776 |
| PZB-plus | 160 | 784 |

| Series | Size | Page |
|---|---|---|
| **Sealed Gripper** | | |
| DPZ-plus | | 792 |
| DPZ-plus | 40 | 796 |
| DPZ-plus | 50 | 800 |
| DPZ-plus | 64 | 806 |
| DPZ-plus | 80 | 812 |
| DPZ-plus | 100 | 818 |
| DPZ-plus | 125 | 824 |
| DPZ-plus | 160 | 830 |
| DPZ-plus | 200 | 834 |

# MPZ

**Pneumatic • 3-Finger Centric Gripper • Gripper for small components**

**Sizes**
16 ... 45

**Weight**
0.01 kg ... 0.29 kg

**Gripping force**
20 N ... 310 N

**Stroke per finger**
1 mm ... 5 mm

**Workpiece weight**
0.05 kg ... 1.15 kg

## Application example




**Handling device for direct mounting to a robot for screwing in sealing plugs**

1. 3-Finger Centric Gripper MPZ
2. Rotary feed-through DDF

## Gripper for small components

small 3-Finger Centric Gripper with base jaws guided on T-slots




## Field of application

for universal use in clean to slightly dirty working environments, especially suitable for gripping small workpieces

## Your advantages and benefits

**T-slot guidance**
for precise gripping at high moment loads

**Finger position monitoring**
also possible via FPS

**Air supply via hose-free direct connection or screw connections**
for the flexible supply of compressed air in all automation systems

## General note to the series

**Principle of function**
Wedge-hook kinematics

**Housing material**
Aluminum alloy, hard-anodized

**Base jaw material**
Steel

**Actuation**
pneumatic, with filtered compressed air (10 microns): dry, lubricated or non-lubricated
Pressure medium: Required quality class of compressed air according to DIN ISO 8573-1: 6 4 4

**Warranty**
24 months (details, general terms and conditions and operation manuals can be downloaded under www.schunk.com)

**Scope of delivery**
Centering sleeves, centering pins, O-rings for direct connection, assembly and operating manual with manufacturer's declaration

**Gripping force maintenance device**
with either mechanical gripping force maintenance or SDV-P pressure maintenance valve

## Sectional diagram

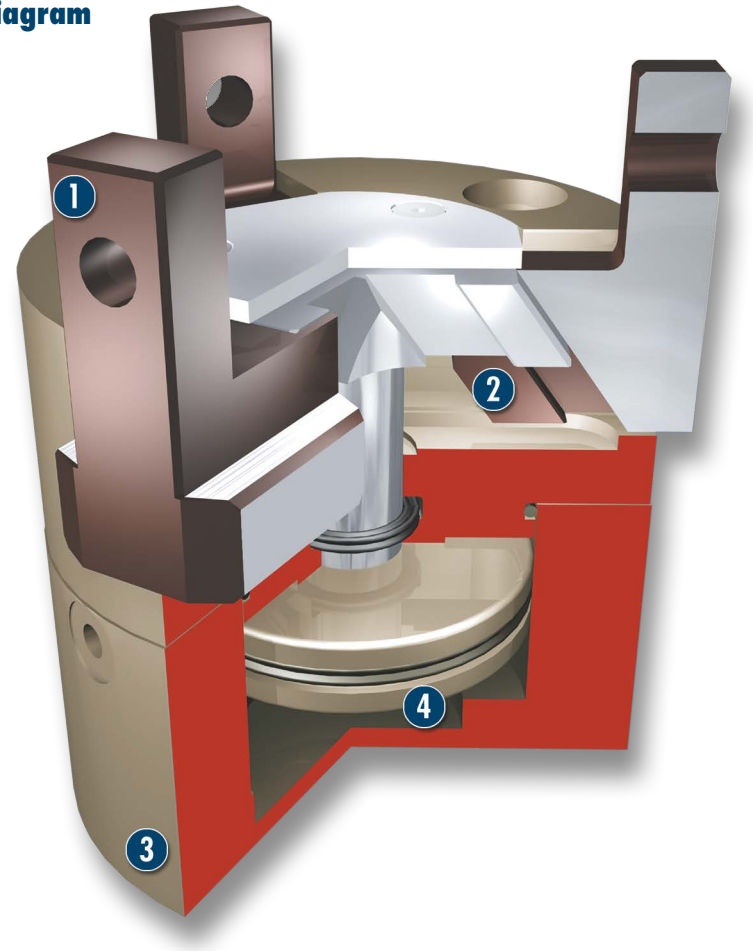


1 **T-slot guidance**
for precise gripping with high moment loads

2 **Wedge-hook design**
for high power transmission and centric gripping

3 **Housing**
weight-optimized through application of hard-anodized, high-strength aluminum alloy

4 **Drive**
pneumatic, powerful and easy to handle

## Functional description

The piston is moved up and down by compressed air.
Through its angled active surfaces, the wedge hook transforms this movement into the lateral, synchronous gripping movement of both base jaws.

## Options and special information

Small and compact 3-Finger Centric Gripper for fast gripping applications. Monitoring of the smallest differences in stroke possible via FPS system.

## Accessories

Accessories from SCHUNK – the suitable supplement for maximum functionality, reliability and performance of all automation modules.

### Centering sleeves



### Fittings



### Magnetic Switches



### Sensor cables



### Plastic inserts






### Sensor Distributor

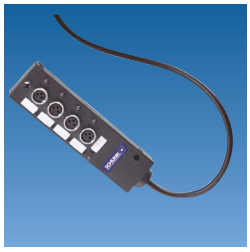

### Gripper pads

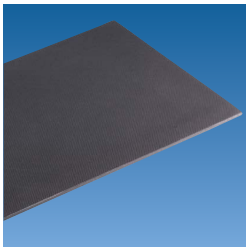

### Flexible Position Sensor

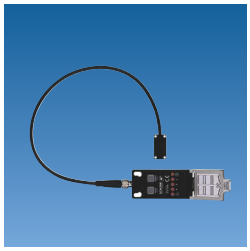

### Pressure maintenance valve



### Finger blanks



ⓘ For the exact size of the required accessories, availability of this size and the designation and ID, please refer to the additional views at the end of the size in question. You will find more detailed information on our accessory range in the “Accessories” catalog section.

## General note to the series

### Gripping force

is the arithmetic total of the gripping force applied to each finger at distance P (see illustration) measured from the upper edge of the gripper.

### Finger length

The finger length is measured from the upper edge of the gripper housing in the direction of the main axis.

### Repeat accuracy

is defined as the spread of the limit position after 100 consecutive strokes.

### Workpiece weight

The recommended workpiece weight is calculated for a force-type connection with a coefficient of friction of 0.1 and a safety factor of 2 against slippage of the workpiece on acceleration due to gravity g. Considerably heavier workpiece weights are permitted with form-fit gripping.

### Closing and opening times

Closing and opening times are purely the times that the base jaws or fingers are in motion. Valve switching times, hose filling times or PLC reaction times are not included in the above times and must be taken into consideration when determining cycle times.

# MPZ 16

**Pneumatic • 3-Finger Centric Gripper • Gripper for small components**




## Gripping force, I.D. gripping

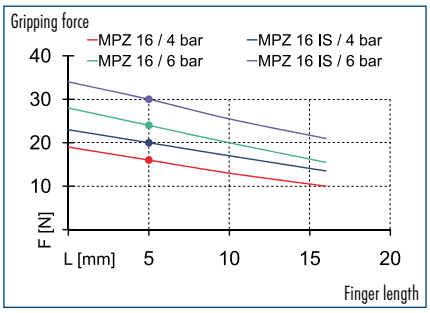


## Gripping force, O.D. gripping

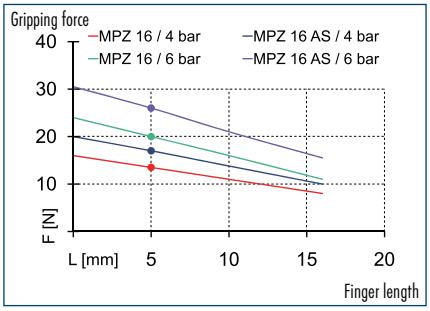


## Finger load

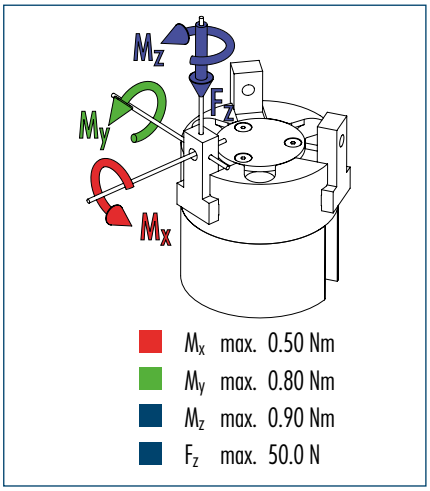


ⓘ The indicated moments and forces are static values, apply per base jaw and may occur simultaneously. $M_y$ may arise in addition to the moment generated by the gripping force itself. If the max. permitted finger weight is exceeded, it is imperative to throttle the air pressure so that the jaw movement occurs without any hitting or bouncing. Service life may be reduced.

## Technical data

| Description | | MPZ 16 | MPZ 16-AS | MPZ 16-IS |
|---|---|---|---|---|
| **ID** | | **0340480** | **0340481** | **0340482** |
| Stroke per finger | [mm] | 1 | 1 | 1 |
| Closing force | [N] | 20 | 26 | |
| Opening force | [N] | 24 | | 30 |
| Min. spring force | [N] | | 6 | 6 |
| Weight | [kg] | 0.01 | 0.02 | 0.02 |
| Recommended workpiece weight | [kg] | 0.05 | 0.05 | 0.05 |
| Air consumption per double stroke | [cm³] | 0.15 | 0.4 | 0.4 |
| Min./max. operating pressure | [bar] | 2/8 | 4/6.5 | 4/6.5 |
| Nominal operating pressure | [bar] | 6 | 6 | 6 |
| Closing/opening time | [s] | 0.02/0.02 | 0.02/0.04 | 0.04/0.02 |
| Max. permitted finger length | [mm] | 16 | 16 | 16 |
| Max. permitted weight per finger | [kg] | 0.02 | 0.02 | 0.02 |
| IP class | | 40 | 40 | 40 |
| Min./max. ambient temperature | [°C] | -10/90 | -10/90 | -10/90 |
| Repeat accuracy | [mm] | 0.01 | 0.01 | 0.01 |
| Cleanroom class ISO-classification 14644-1 | | 5 | 5 | 5 |

## Main view

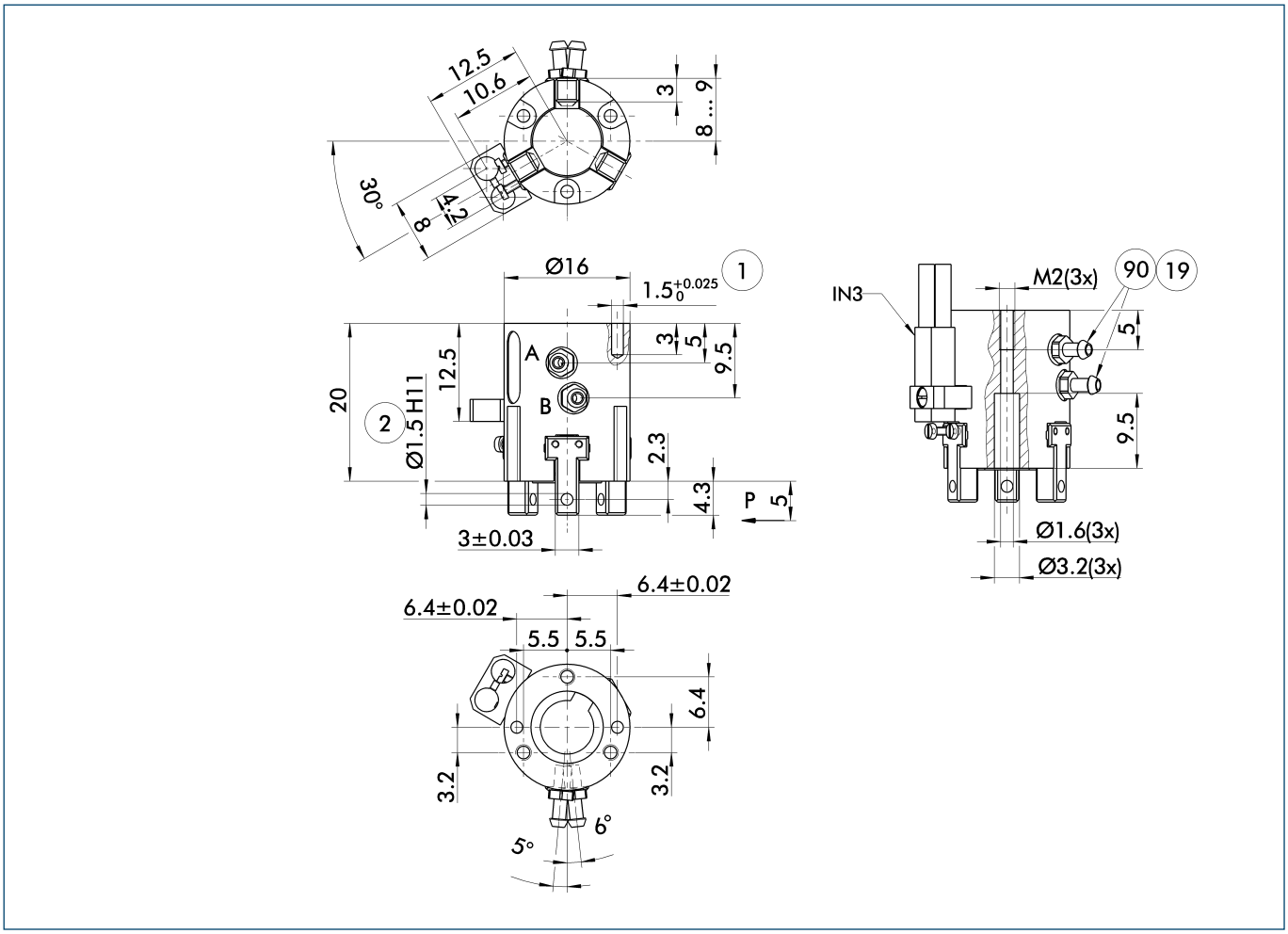


The drawing shows the gripper in the basic version with closed jaws, the dimensions do not include the options described below.

ⓘ The SDV-P pressure maintenance valve can also be used for I.D. or O.D. gripping alternatively or in addition to the spring-loaded, mechanical gripping force maintenance device (see "Accessories" catalog section).

A, a Main/direct connection, gripper opening
B, b Main/direct connection, gripper closing
① Gripper connection
② Finger connection
⑲ Air connection
⑨⓪ Polyurethane hoses with an I.D. of 1.6 mm. Source: AC Aircontrols GmbH, Kempen, Germany

## AS/IS gripping force maintenance device

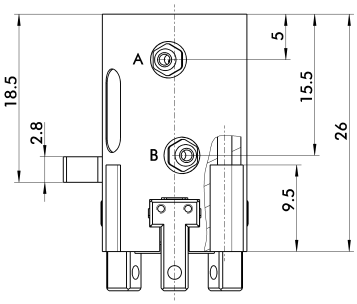


The mechanical gripping force maintenance device ensures a minimum gripping force even in case of pressure drop. This acts as closing force in the AS version, and as opening force in the IS version. In addition, the gripping force maintenance device can also be used for increasing the gripping force or for single-acting gripping.

## Inductive proximity switches

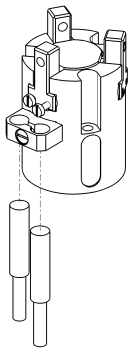

End position monitoring for direct mounting

| Description | ID |
|---|---|
| Inductive proximity switches | |
| IN 3-S-M8-PNP | **0301466** |
| Connection cables | |
| KA BG08-L 3P-0300-PNP | **0301622** |
| KA BG08-L 3P-0500-PNP | **0301623** |
| KA BW08-L 3P-0300-PNP | **0301594** |
| KA BW08-L 3P-0500-PNP | **0301502** |
| Cable extensions | |
| KV BW08-SG08 3P-0030-PNP | **0301495** |
| KV BW08-SG08 3P-0100-PNP | **0301496** |
| KV BW08-SG08 3P-0200-PNP | **0301497** |

ⓘ Please note the minimum permitted bending radii for the sensor cables, which are generally 35 mm.

You can find more detailed information and individual parts of the above-mentioned accessories in the “Accessories” catalog section.

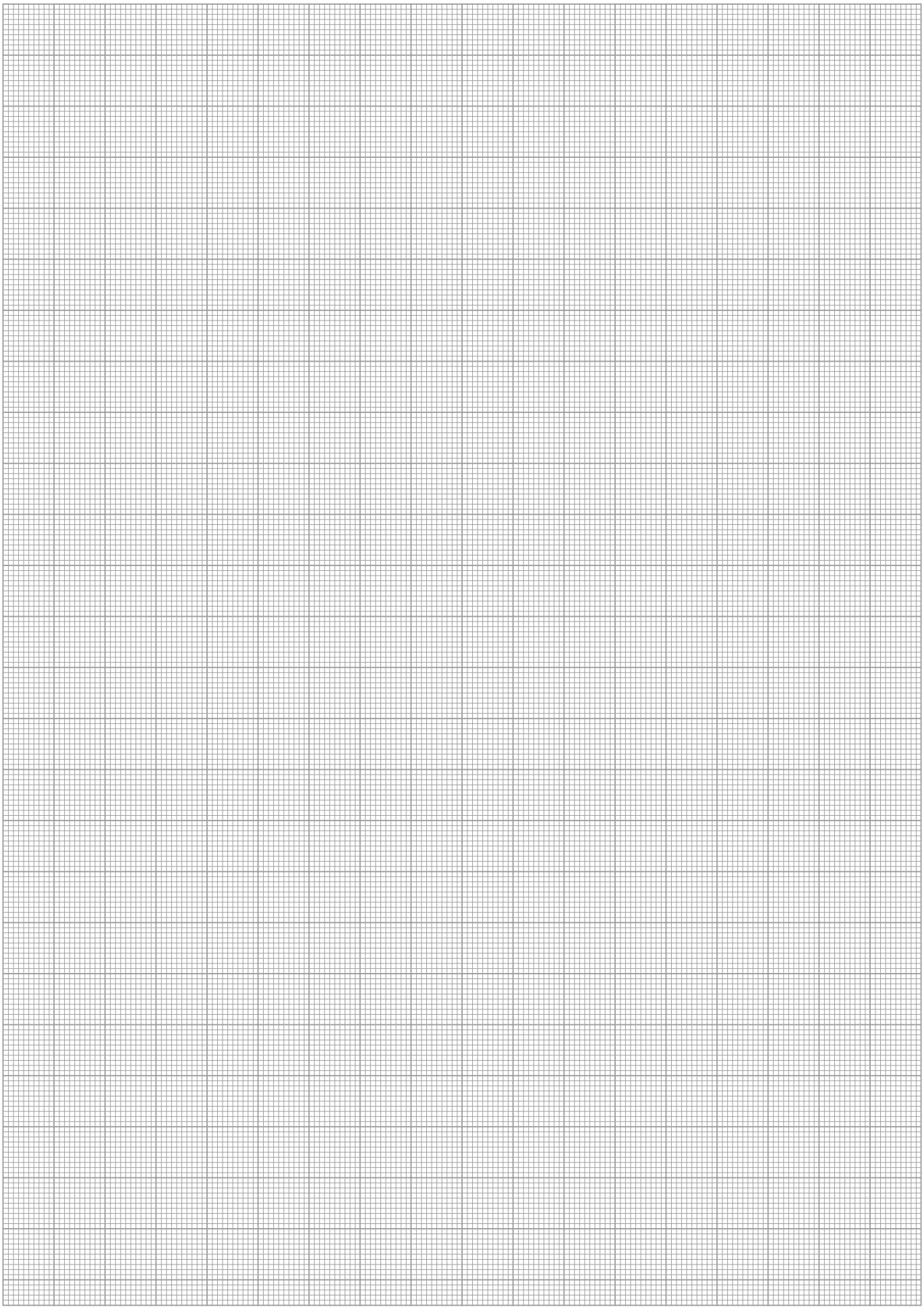

# MPZ 20

**Pneumatic • 3-Finger Centric Gripper • Gripper for small components**



## Gripping force, I.D. gripping

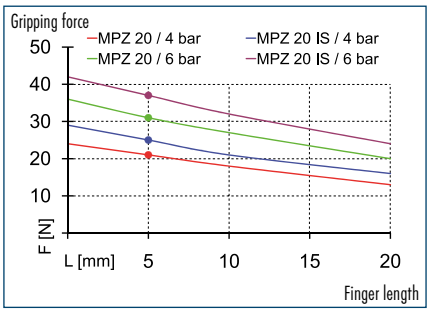


## Gripping force, O.D. gripping

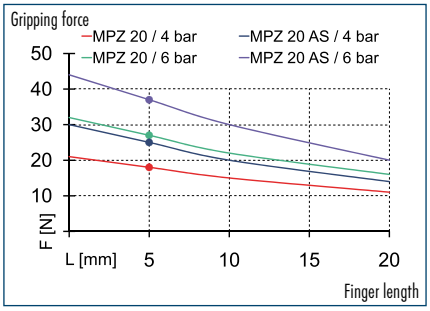


## Finger load

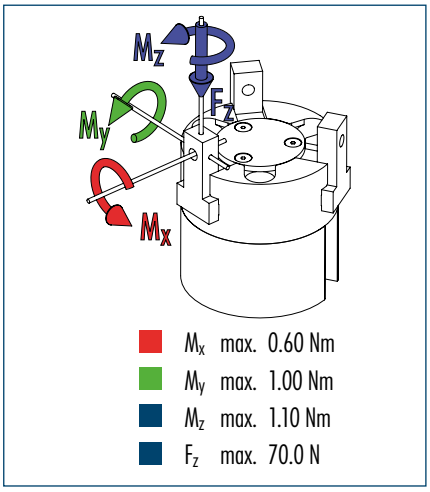


ⓘ The indicated moments and forces are static values, apply per base jaw and may occur simultaneously. $M_y$ may arise in addition to the moment generated by the gripping force itself. If the max. permitted finger weight is exceeded, it is imperative to throttle the air pressure so that the jaw movement occurs without any hitting or bouncing. Service life may be reduced.

## Technical data

| Description | | MPZ 20 | MPZ 20-AS | MPZ 20-IS |
|---|---|---|---|---|
| **ID** | | **0340490** | **0340491** | **0340492** |
| Stroke per finger | [mm] | 1.5 | 1.5 | 1.5 |
| Closing force | [N] | 26 | 34 | |
| Opening force | [N] | 30 | | 38 |
| Min. spring force | [N] | | 8 | 8 |
| Weight | [kg] | 0.02 | 0.03 | 0.03 |
| Recommended workpiece weight | [kg] | 0.1 | 0.1 | 0.1 |
| Air consumption per double stroke | [cm³] | 0.3 | 0.7 | 0.7 |
| Min./max. operating pressure | [bar] | 2/8 | 4/6.5 | 4/6.5 |
| Nominal operating pressure | [bar] | 6 | 6 | 6 |
| Closing/opening time | [s] | 0.02/0.02 | 0.02/0.04 | 0.04/0.02 |
| Max. permitted finger length | [mm] | 20 | 20 | 20 |
| Max. permitted weight per finger | [kg] | 0.03 | 0.03 | 0.03 |
| IP class | | 40 | 40 | 40 |
| Min./max. ambient temperature | [°C] | -10/90 | -10/90 | -10/90 |
| Repeat accuracy | [mm] | 0.01 | 0.01 | 0.01 |
| Cleanroom class ISO-classification 14644-1 | | 5 | 5 | 5 |

## Main view

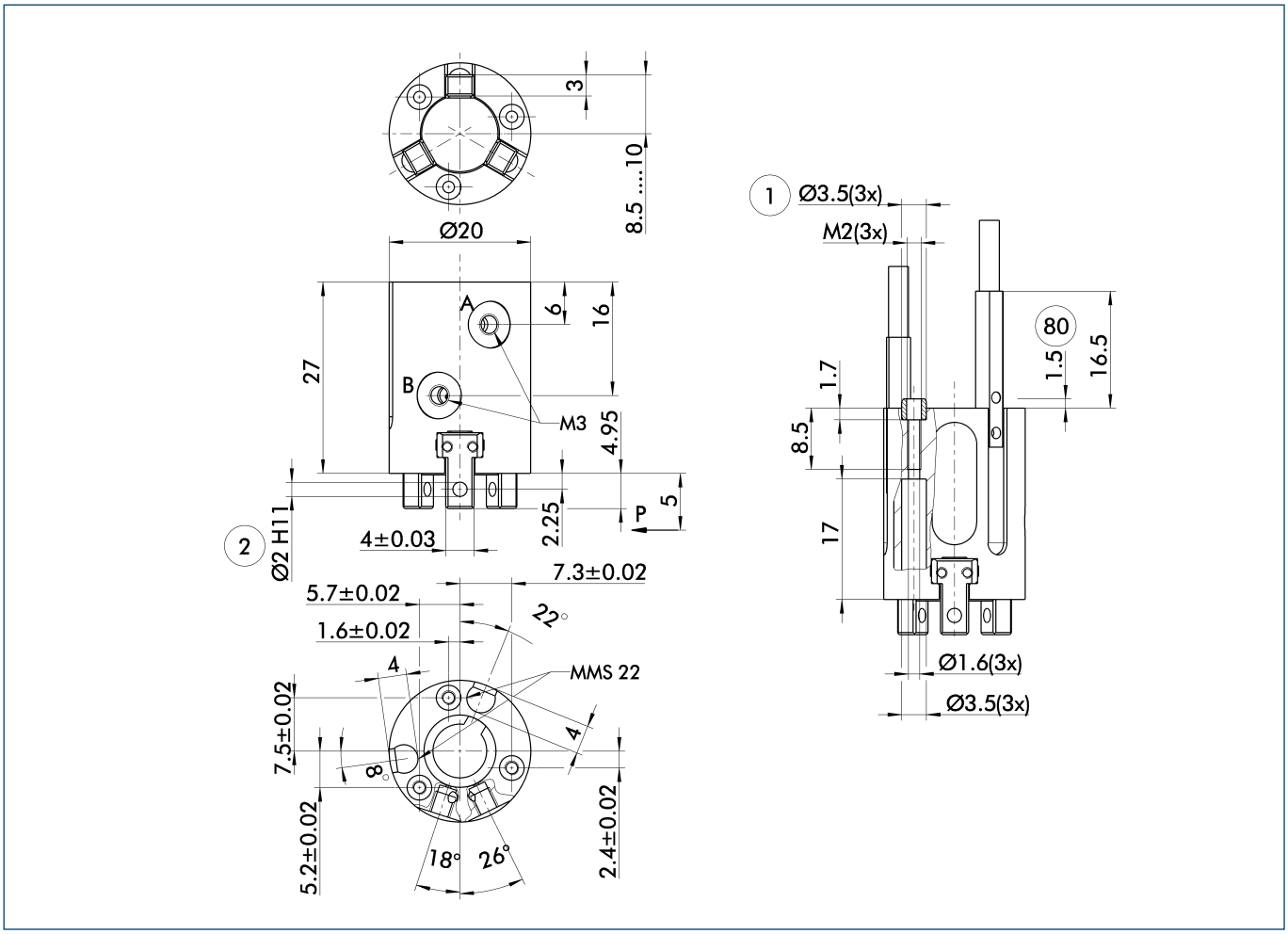


The drawing shows the gripper in the basic version with closed jaws, the dimensions do not include the options described below.

ⓘ The SDV-P pressure maintenance valve can also be used for I.D. or O.D. gripping alternatively or in addition to the spring-loaded, mechanical gripping force maintenance device (see "Accessories" catalog section).

A, a Main/direct connection, gripper opening
B, b Main/direct connection, gripper closing
① Gripper connection
② Finger connection
(80) Depth of the centering sleeve hole in the matching part

## AS/IS gripping force maintenance device

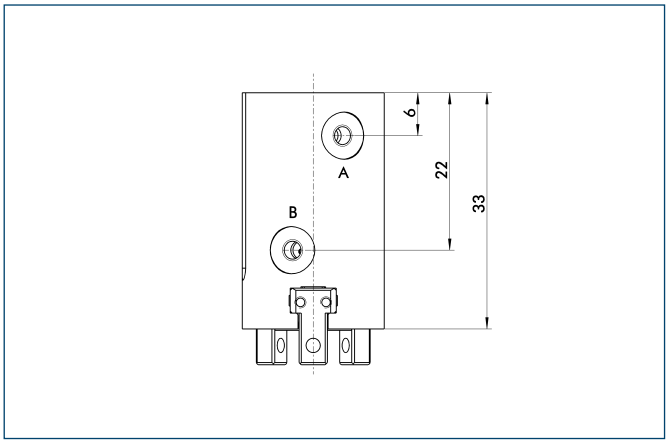


The mechanical gripping force maintenance device ensures a minimum gripping force even in case of pressure drop. This acts as closing force in the AS version, and as opening force in the IS version. In addition, the gripping force maintenance device can also be used for increasing the gripping force or for single-acting gripping.

## Programmable magnetic switch

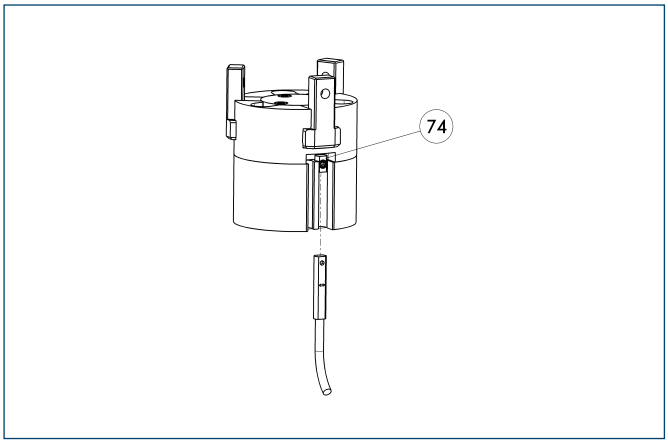


(74) Stop for MMS-P

Position monitoring with two programmable positions per sensor. The end position monitoring is mounted in the C-slot.

| Description | ID | Recommended product |
|---|---|---|
| Programmable magnetic switch | | |
| MMS-P 22-S-M8-PNP | **0301370** | • |
| MMSK-P 22-S-PNP | **0301371** | |
| Connection cables | | |
| KA BG08-L 4P-0500 | **0307767** | |
| KA BG08-L 4P-1000 | **0307768** | |
| KA BW08-L 4P-0500 | **0307765** | |
| KA BW08-L 4P-1000 | **0307766** | |
| Sensor Distributor | | |
| V2-M8-4P-2XM8-3P | **0301380** | |

ⓘ Please note the minimum permitted bending radii for the sensor cables, which are generally 35 mm.

ⓘ Per gripper one sensor (closer/NO) is required, optionally a cable extension.

## Electronic magnetic switches

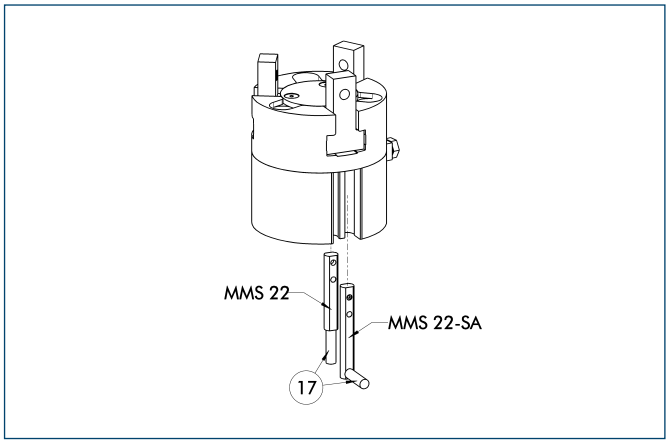


(17) Cable outlet

End position monitoring for mounting in the C-slot

| Description | ID | Recommended product |
|---|---|---|
| Electronic magnetic switches | | |
| MMS 22-S-M5-PNP | **0301438** | |
| MMS 22-S-M5-NPN | **0301439** | |
| MMS 22-S-M8-PNP | **0301432** | • |
| MMS 22-S-M8-NPN | **0301433** | |
| MMSK 22-S-PNP | **0301434** | |
| MMSK 22-S-NPN | **0301435** | |
| Electronic magnetic switches with lateral cable outlet | | |
| MMS 22-S-M5-PNP-SA | **0301448** | |
| MMS 22-S-M5-NPN-SA | **0301449** | |
| MMS 22-S-M8-PNP-SA | **0301442** | • |
| MMS 22-S-M8-NPN-SA | **0301443** | |
| MMSK 22-S-PNP-SA | **0301444** | |
| MMSK 22-S-NPN-SA | **0301445** | |
| Connection cables | | |
| KA BG05-L 3P-0300 | **0301652** | |
| KA BG08-L 3P-0300-PNP | **0301622** | |
| KA BG08-L 3P-0500-PNP | **0301623** | |
| KA BW05-L 3P-0300 | **0301650** | |
| KA BW08-L 3P-0300-NPN | **0301602** | |
| KA BW08-L 3P-0300-PNP | **0301594** | |
| KA BW08-L 3P-0500-NPN | **9641116** | |
| KA BW08-L 3P-0500-PNP | **0301502** | |
| Cable extensions | | |
| KV BW08-SG08 3P-0030-PNP | **0301495** | |
| KV BW08-SG08 3P-0100-PNP | **0301496** | |
| KV BW08-SG08 3P-0200-PNP | **0301497** | |

ⓘ Please note the minimum permitted bending radii for the sensor cables, which are generally 35 mm.

You can find more detailed information and individual parts of the above-mentioned accessories in the “Accessories” catalog section.

# MPZ 25

**Pneumatic • 3-Finger Centric Gripper • Gripper for small components**



## Gripping force, O.D. gripping

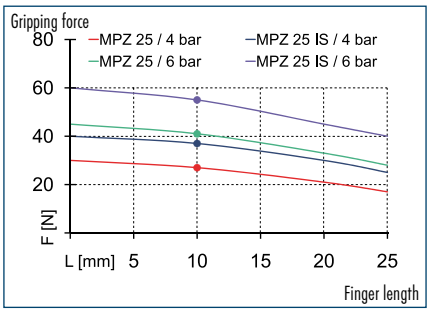


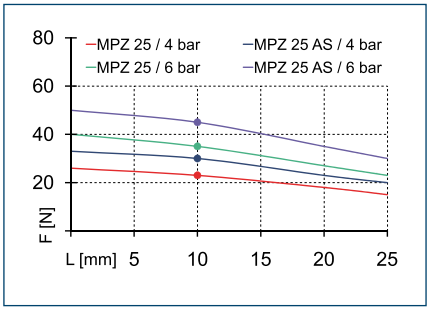


## Finger load

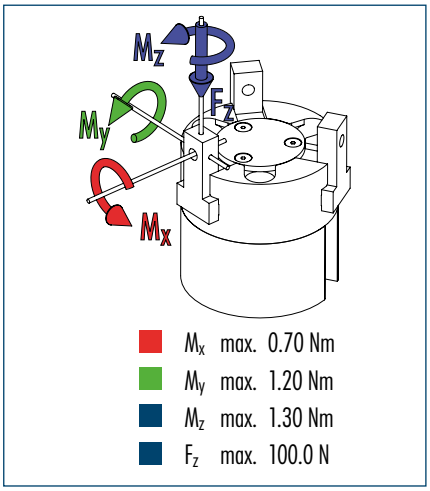


ⓘ The indicated moments and forces are static values, apply per base jaw and may occur simultaneously. $M_y$ may arise in addition to the moment generated by the gripping force itself. If the max. permitted finger weight is exceeded, it is imperative to throttle the air pressure so that the jaw movement occurs without any hitting or bouncing. Service life may be reduced.

## Technical data

| Description | | MPZ 25 | MPZ 25-AS | MPZ 25-IS |
|---|---|---|---|---|
| **ID** | | **0340500** | **0340501** | **0340502** |
| Stroke per finger | [mm] | 2 | 2 | 2 |
| Closing force | [N] | 35 | 47 | |
| Opening force | [N] | 40 | | 55 |
| Min. spring force | [N] | | 12 | 15 |
| Weight | [kg] | 0.04 | 0.06 | 0.06 |
| Recommended workpiece weight | [kg] | 0.2 | 0.2 | 0.2 |
| Air consumption per double stroke | [cm³] | 0.6 | 1.8 | 1.8 |
| Min./max. operating pressure | [bar] | 2/8 | 4/6.5 | 4/6.5 |
| Nominal operating pressure | [bar] | 6 | 6 | 6 |
| Closing/opening time | [s] | 0.02/0.02 | 0.02/0.04 | 0.04/0.02 |
| Max. permitted finger length | [mm] | 25 | 25 | 25 |
| Max. permitted weight per finger | [kg] | 0.03 | 0.03 | 0.03 |
| IP class | | 40 | 40 | 40 |
| Min./max. ambient temperature | [°C] | -10/90 | -10/90 | -10/90 |
| Repeat accuracy | [mm] | 0.01 | 0.01 | 0.01 |
| Cleanroom class ISO-classification 14644-1 | | 5 | 5 | 5 |

## Main view

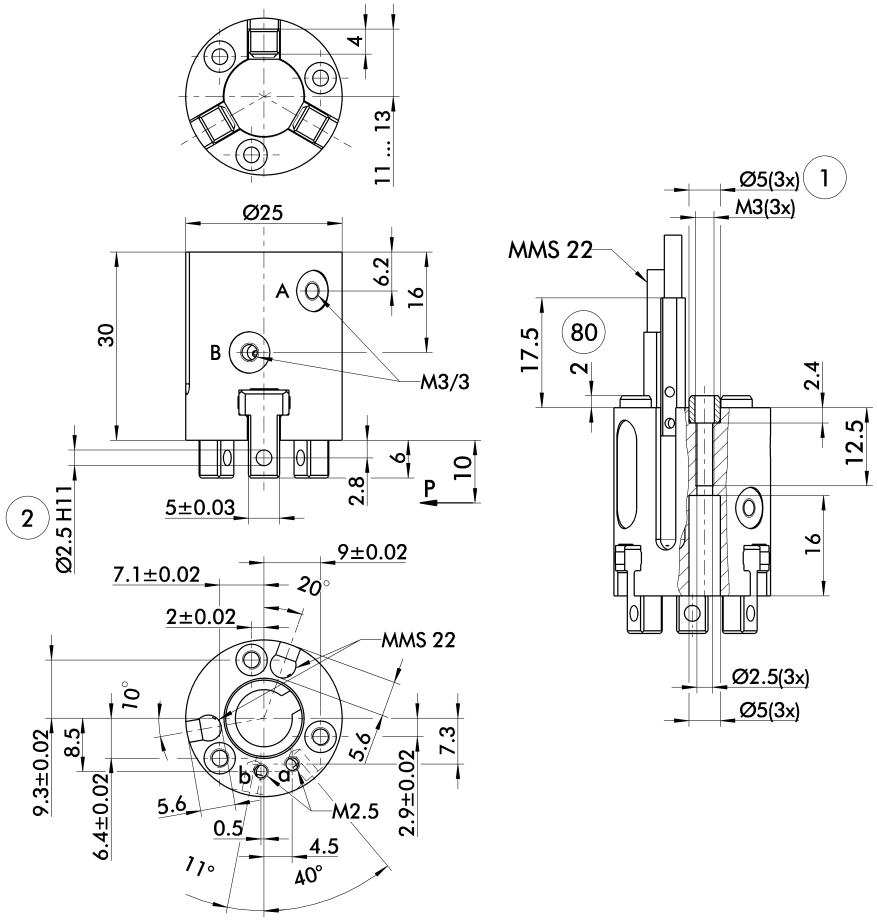


The drawing shows the gripper in the basic version with closed jaws, the dimensions do not include the options described below.

ⓘ The SDV-P pressure maintenance valve can also be used for I.D. or O.D. gripping alternatively or in addition to the spring-loaded, mechanical gripping force maintenance device (see "Accessories" catalog section).

A, a Main/direct connection, gripper opening
B, b Main/direct connection, gripper closing
① Gripper connection
② Finger connection
(80) Depth of the centering sleeve hole in the matching part

## Hose-free direct connection

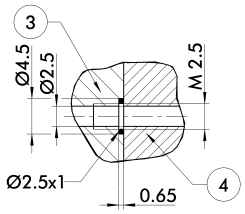


③ Adapter
④ Gripper

The direct connection is used for supplying compressed air without hoses. Instead, the pressure medium is fed through bore-holes in the mounting plate.

## AS/IS gripping force maintenance device

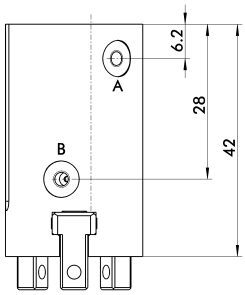


The mechanical gripping force maintenance device ensures a minimum gripping force even in case of pressure drop. This acts as closing force in the AS version, and as opening force in the IS version. In addition, the gripping force maintenance device can also be used for increasing the gripping force or for single-acting gripping.

## Programmable magnetic switch

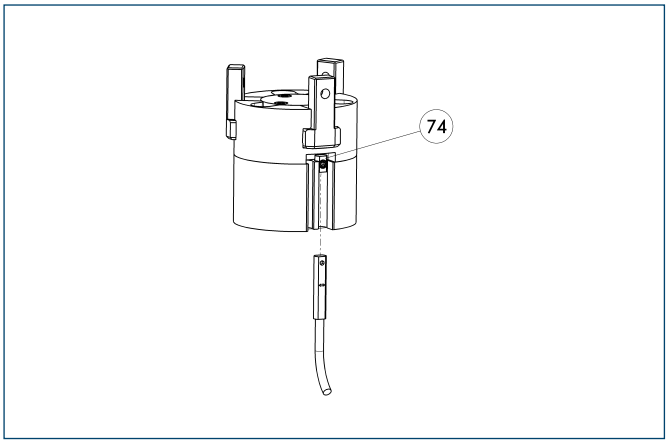


(74) Stop for MMS-P

Position monitoring with two programmable positions per sensor. The end position monitoring is mounted in the C-slot.

| Description | ID | Recommended product |
|---|---|---|
| Programmable magnetic switch | | |
| MMS-P 22-S-M8-PNP | **0301370** | • |
| MMSK-P 22-S-PNP | **0301371** | |
| Connection cables | | |
| KA BG08-L 4P-0500 | **0307767** | |
| KA BG08-L 4P-1000 | **0307768** | |
| KA BW08-L 4P-0500 | **0307765** | |
| KA BW08-L 4P-1000 | **0307766** | |
| Sensor Distributor | | |
| V2-M8-4P-2XM8-3P | **0301380** | |

ⓘ Please note the minimum permitted bending radii for the sensor cables, which are generally 35 mm.

ⓘ Per gripper one sensor (closer/NO) is required, optionally a cable extension.

## Electronic magnetic switches

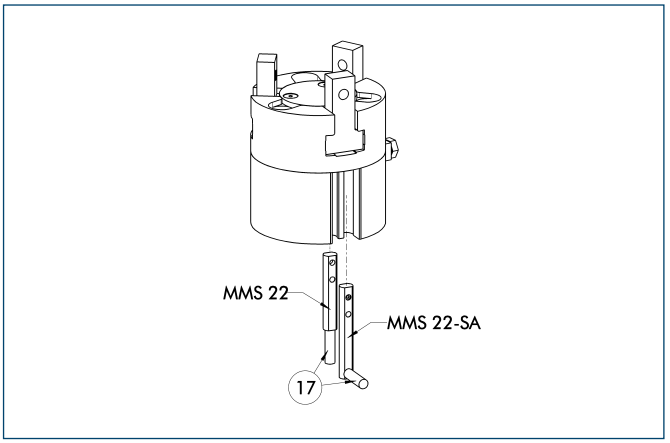


(17) Cable outlet

End position monitoring for mounting in the C-slot

| Description | ID | Recommended product |
|---|---|---|
| Electronic magnetic switches | | |
| MMS 22-S-M5-PNP | **0301438** | |
| MMS 22-S-M5-NPN | **0301439** | |
| MMS 22-S-M8-PNP | **0301432** | • |
| MMS 22-S-M8-NPN | **0301433** | |
| MMSK 22-S-PNP | **0301434** | |
| MMSK 22-S-NPN | **0301435** | |
| Electronic magnetic switches with lateral cable outlet | | |
| MMS 22-S-M5-PNP-SA | **0301448** | |
| MMS 22-S-M5-NPN-SA | **0301449** | |
| MMS 22-S-M8-PNP-SA | **0301442** | • |
| MMS 22-S-M8-NPN-SA | **0301443** | |
| MMSK 22-S-PNP-SA | **0301444** | |
| MMSK 22-S-NPN-SA | **0301445** | |
| Connection cables | | |
| KA BG05-L 3P-0300 | **0301652** | |
| KA BG08-L 3P-0300-PNP | **0301622** | |
| KA BG08-L 3P-0500-PNP | **0301623** | |
| KA BW05-L 3P-0300 | **0301650** | |
| KA BW08-L 3P-0300-NPN | **0301602** | |
| KA BW08-L 3P-0300-PNP | **0301594** | |
| KA BW08-L 3P-0500-NPN | **9641116** | |
| KA BW08-L 3P-0500-PNP | **0301502** | |
| Cable extensions | | |
| KV BW08-SG08 3P-0030-PNP | **0301495** | |
| KV BW08-SG08 3P-0100-PNP | **0301496** | |
| KV BW08-SG08 3P-0200-PNP | **0301497** | |

ⓘ Please note the minimum permitted bending radii for the sensor cables, which are generally 35 mm.

You can find more detailed information and individual parts of the above-mentioned accessories in the “Accessories” catalog section.

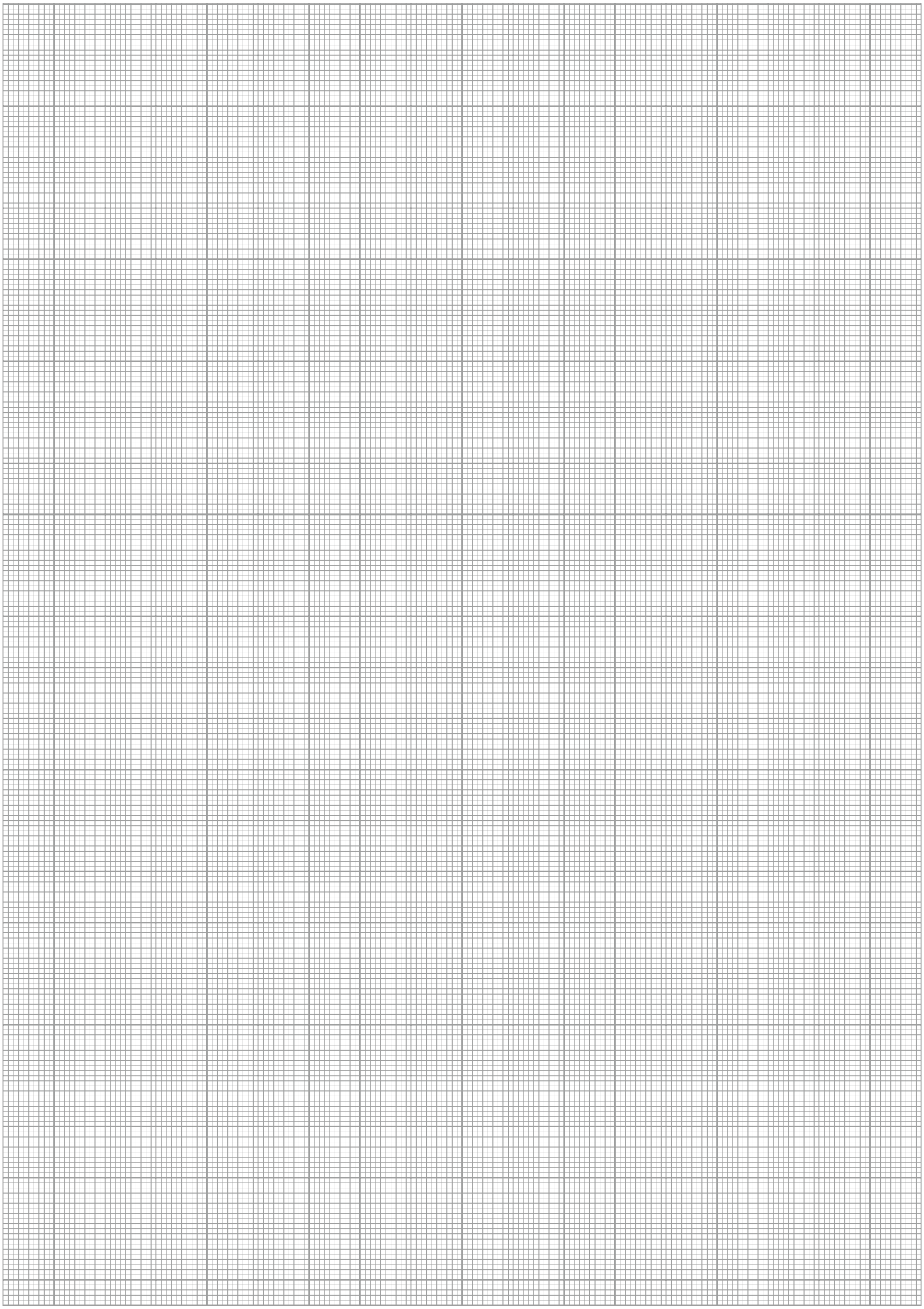

# MPZ 30

**Pneumatic • 3-Finger Centric Gripper • Gripper for small components**



## Gripping force, I.D. gripping

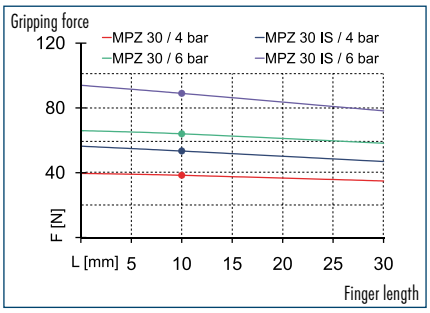


## Gripping force, O.D. gripping

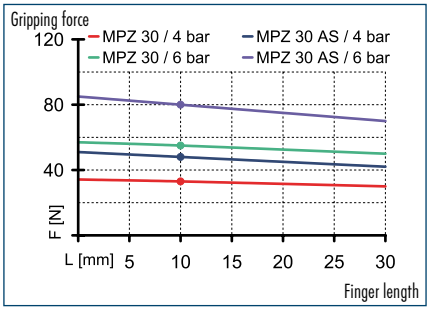


## Finger load

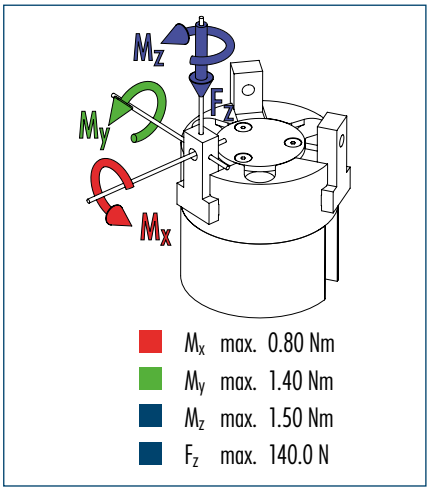


ⓘ The indicated moments and forces are static values, apply per base jaw and may occur simultaneously. $M_y$ may arise in addition to the moment generated by the gripping force itself. If the max. permitted finger weight is exceeded, it is imperative to throttle the air pressure so that the jaw movement occurs without any hitting or bouncing. Service life may be reduced.

## Technical data

| Description | | MPZ 30 | MPZ 30 FPS | MPZ 30-AS | MPZ 30-IS |
|---|---|---|---|---|---|
| **ID** | | **0340510** | **0340513** | **0340511** | **0340512** |
| Stroke per finger | [mm] | 3 | 3 | 3 | 3 |
| Closing force | [N] | 55 | 55 | 80 | |
| Opening force | [N] | 65 | 65 | | 90 |
| Min. spring force | [N] | | | 25 | 25 |
| Weight | [kg] | 0.08 | 0.1 | 0.09 | 0.09 |
| Recommended workpiece weight | [kg] | 0.28 | 0.28 | 0.28 | 0.28 |
| Air consumption per double stroke | [cm³] | 2.01 | 2.01 | 2.01 | 2.01 |
| Min./max. operating pressure | [bar] | 2/8 | 2/8 | 4/6.5 | 4/6.5 |
| Nominal operating pressure | [bar] | 6 | 6 | 6 | 6 |
| Closing/opening time | [s] | 0.02/0.02 | 0.02/0.02 | 0.02/0.04 | 0.04/0.02 |
| Max. permitted finger length | [mm] | 30 | 30 | 30 | 30 |
| Max. permitted weight per finger | [kg] | 0.03 | 0.03 | 0.03 | 0.03 |
| IP class | | 40 | 40 | 40 | 40 |
| Min./max. ambient temperature | [°C] | -10/90 | -10/90 | -10/90 | -10/90 |
| Repeat accuracy | [mm] | 0.01 | 0.01 | 0.01 | 0.01 |
| Cleanroom class ISO-classification 14644-1 | | 5 | 5 | 5 | 5 |

## Main view

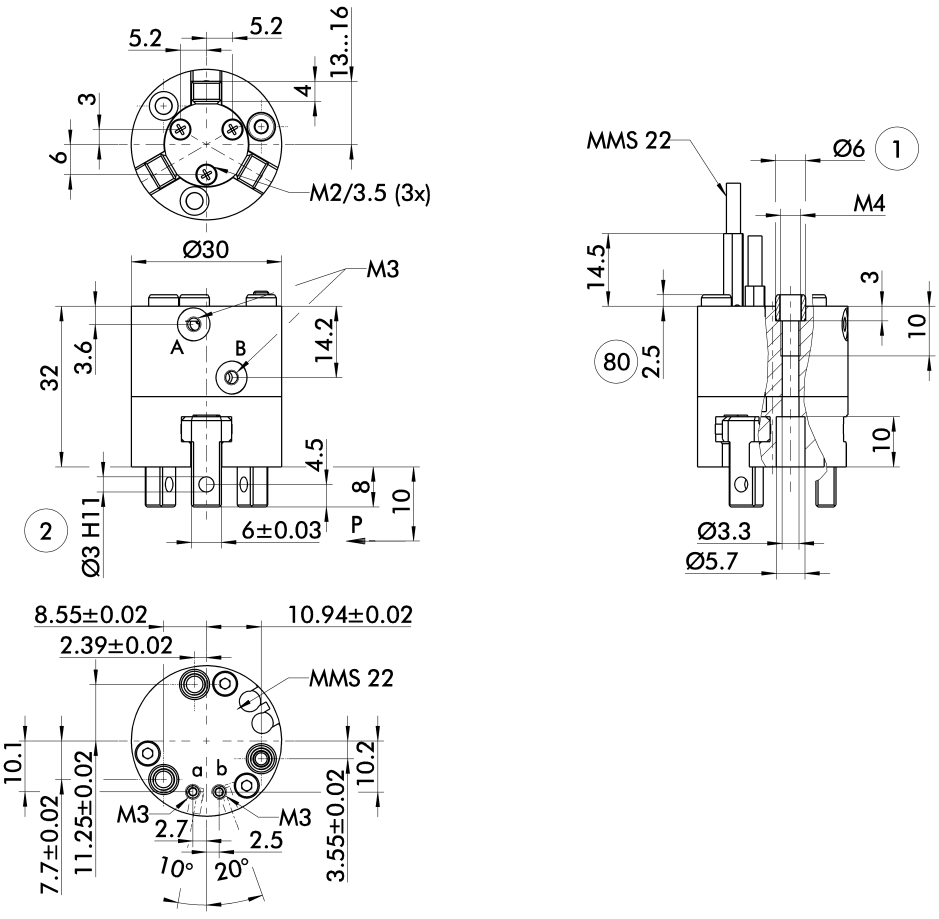


The drawing shows the gripper in the basic version with closed jaws, the dimensions do not include the options described below.

ⓘ The SDV-P pressure maintenance valve can also be used for I.D. or O.D. gripping alternatively or in addition to the spring-loaded, mechanical gripping force maintenance device (see "Accessories" catalog section).

A, a Main/direct connection, gripper opening
B, b Main/direct connection, gripper closing
① Gripper connection
② Finger connection
(80) Depth of the centering sleeve hole in the matching part

## Hose-free direct connection

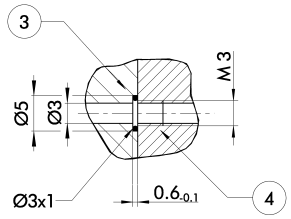


③ Adapter
④ Gripper

The direct connection is used for supplying compressed air without hoses. Instead, the pressure medium is fed through bore-holes in the mounting plate.

## AS/IS gripping force maintenance device

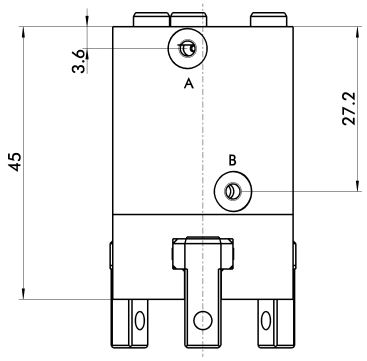


The mechanical gripping force maintenance device ensures a minimum gripping force even in case of pressure drop. This acts as closing force in the AS version, and as opening force in the IS version. In addition, the gripping force maintenance device can also be used for increasing the gripping force or for single-acting gripping.

## Flexible Position Sensor

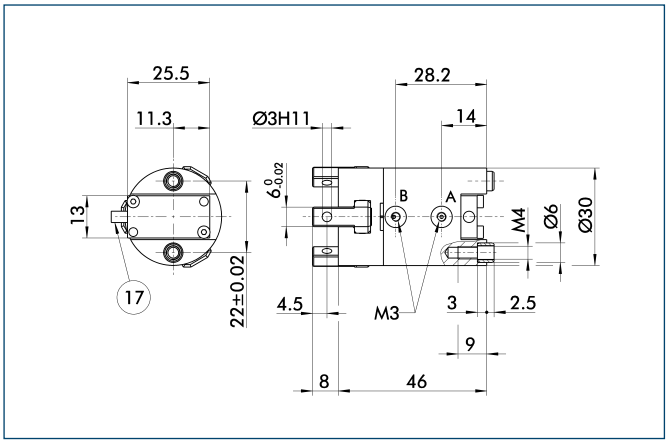


(17) Cable outlet

The FPS flexible position sensor can distinguish between five freely programmable ranges or switching points for the stroke of a gripper and can be used in conjunction with a PC as a measuring system.

## Modular Assembly Automation

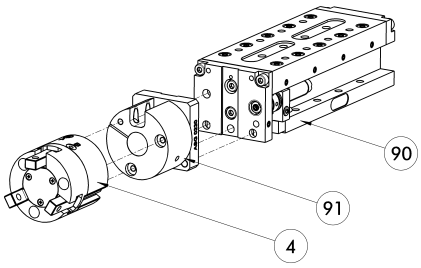


(4) Gripper
(90) CLM
(91) ASG

This gripper can be combined with the standard linear modules LM, KLM, CLM and ELM of the GEMOTEC modular system. For more information see our main catalog "Modular Assembly Automation".

## Finger blanks

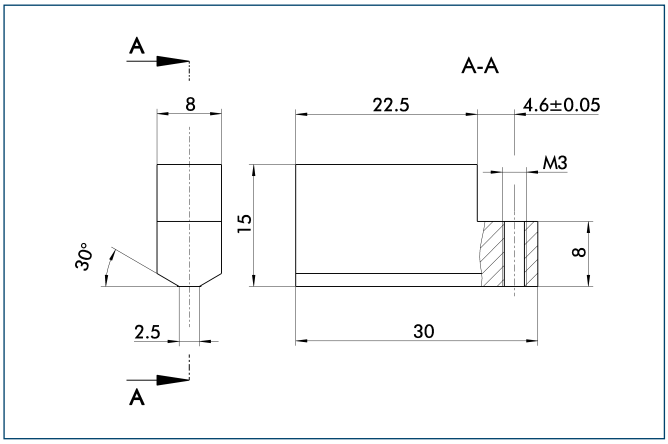


Finger blanks for customized subsequent machining

| Description | ID | Material | Scope of delivery |
|---|---|---|---|
| Finger blanks | | | |
| ABR 30 | **0340519** | Aluminum | 3 |

## Programmable magnetic switch

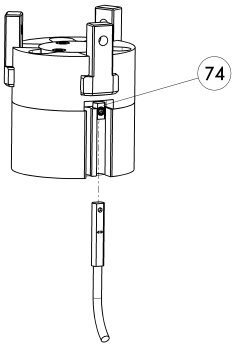


(74) Stop for MMS-P

Position monitoring with two programmable positions per sensor. The end position monitoring is mounted in the C-slot.

| Description | ID | Recommended product |
|---|---|---|
| Programmable magnetic switch | | |
| MMS-P 22-S-M8-PNP | **0301370** | • |
| MMSK-P 22-S-PNP | **0301371** | |
| Connection cables | | |
| KA BG08-L 4P-0500 | **0307767** | |
| KA BG08-L 4P-1000 | **0307768** | |
| KA BW08-L 4P-0500 | **0307765** | |
| KA BW08-L 4P-1000 | **0307766** | |
| Sensor Distributor | | |
| V2-M8-4P-2XM8-3P | **0301380** | |

ⓘ Please note the minimum permitted bending radii for the sensor cables, which are generally 35 mm.
ⓘ Per gripper one sensor (closer/NO) is required, optionally a cable extension.

You can find more detailed information and individual parts of the above-mentioned accessories in the "Accessories" catalog section.

## Electronic magnetic switches

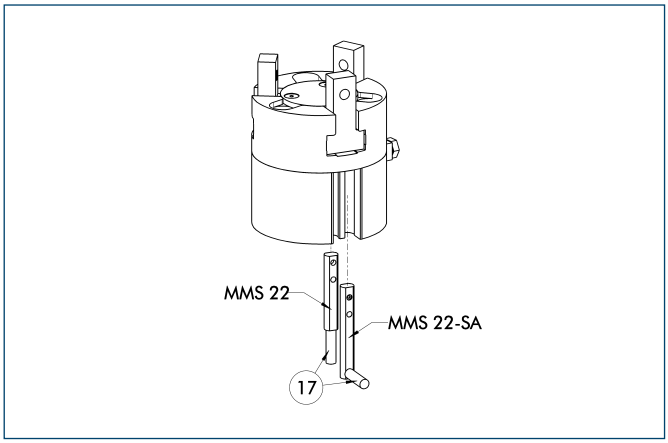


⑰ Cable outlet

End position monitoring for mounting in the C-slot

| Description | ID | Recommended product |
|---|---|---|
| Electronic magnetic switches | | |
| MMS 22-S-M5-PNP | **0301438** | |
| MMS 22-S-M5-NPN | **0301439** | |
| MMS 22-S-M8-PNP | **0301432** | • |
| MMS 22-S-M8-NPN | **0301433** | |
| MMSK 22-S-PNP | **0301434** | |
| MMSK 22-S-NPN | **0301435** | |
| Electronic magnetic switches with lateral cable outlet | | |
| MMS 22-S-M5-PNP-SA | **0301448** | |
| MMS 22-S-M5-NPN-SA | **0301449** | |
| MMS 22-S-M8-PNP-SA | **0301442** | • |
| MMS 22-S-M8-NPN-SA | **0301443** | |
| MMSK 22-S-PNP-SA | **0301444** | |
| MMSK 22-S-NPN-SA | **0301445** | |
| Reed Switches | | |
| RMS 22-S-M8 | **0377720** | • |
| Connection cables | | |
| KA BG05-L 3P-0300 | **0301652** | |
| KA BG08-L 3P-0300-PNP | **0301622** | |
| KA BG08-L 3P-0500-PNP | **0301623** | |
| KA BW05-L 3P-0300 | **0301650** | |
| KA BW08-L 3P-0300-NPN | **0301602** | |
| KA BW08-L 3P-0300-PNP | **0301594** | |
| KA BW08-L 3P-0500-NPN | **9641116** | |
| KA BW08-L 3P-0500-PNP | **0301502** | |
| Cable extensions | | |
| KV BW08-SG08 3P-0030-PNP | **0301495** | |
| KV BW08-SG08 3P-0100-PNP | **0301496** | |
| KV BW08-SG08 3P-0200-PNP | **0301497** | |

ⓘ Please note the minimum permitted bending radii for the sensor cables, which are generally 35 mm.

## Flexible Position Sensor

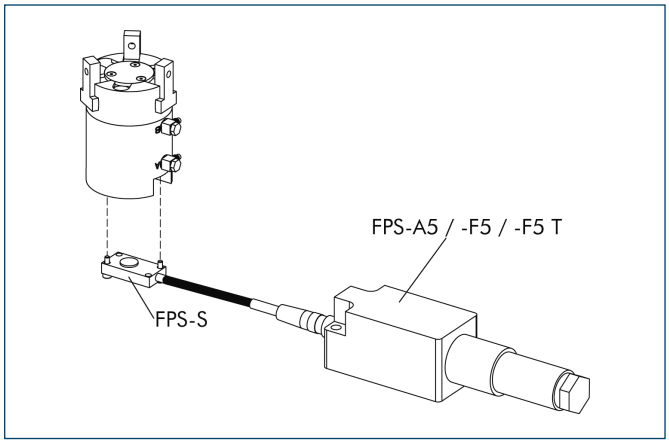


Flexible position monitoring of up to five positions

| Description | ID |
|---|---|
| Electronic Processor | |
| FPS-F5 | **0301805** |
| FPS-F5 T | **0301807** |
| Sensor | |
| FPS-S 13 | **0301705** |

ⓘ When using a FPS system, a FPS sensor (FPS-S) and a control unit (FPS-F5 / F5 T or A5) are required for each gripper as well as a mounting kit (AS), if listed. Cable extensions (KV) are available as options in the “Accessories” catalog section.

You can find more detailed information and individual parts of the above-mentioned accessories in the “Accessories” catalog section.

# MPZ 38

**Pneumatic • 3-Finger Centric Gripper • Gripper for small components**




## Gripping force, I.D. gripping

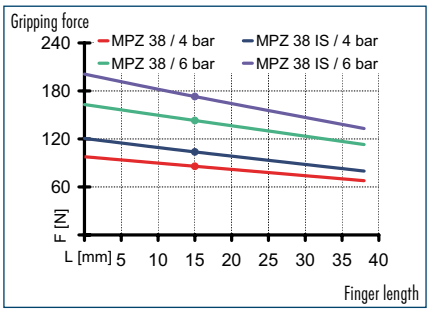


## Gripping force, O.D. gripping

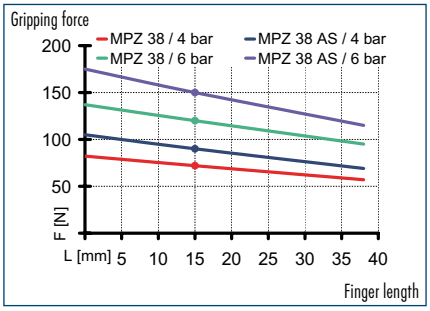


## Finger load

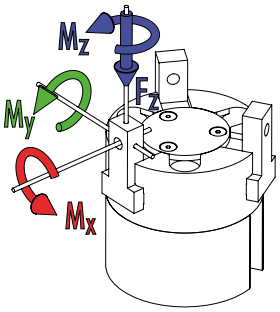


$M_x$ max. 1.00 Nm
$M_y$ max. 1.80 Nm
$M_z$ max. 2.50 Nm
$F_z$ max. 200.0 N

ⓘ The indicated moments and forces are static values, apply per base jaw and may occur simultaneously. $M_y$ may arise in addition to the moment generated by the gripping force itself. If the max. permitted finger weight is exceeded, it is imperative to throttle the air pressure so that the jaw movement occurs without any hitting or bouncing. Service life may be reduced.

## Technical data

| Description | | MPZ 38 | MPZ 38 FPS | MPZ 38-AS | MPZ 38-IS |
|---|---|---|---|---|---|
| **ID** | | **0340520** | **0340523** | **0340521** | **0340522** |
| Stroke per finger | [mm] | 4 | 4 | 4 | 4 |
| Closing force | [N] | 120 | 120 | 150 | |
| Opening force | [N] | 140 | 140 | | 180 |
| Min. spring force | [N] | | | 30 | 40 |
| Weight | [kg] | 0.14 | 0.19 | 0.19 | 0.19 |
| Recommended workpiece weight | [kg] | 0.6 | 0.6 | 0.6 | 0.6 |
| Air consumption per double stroke | [cm³] | 4.08 | 4.08 | 4.08 | 4.08 |
| Min./max. operating pressure | [bar] | 2/8 | 2/8 | 4/6.5 | 4/6.5 |
| Nominal operating pressure | [bar] | 6 | 6 | 6 | 6 |
| Closing/opening time | [s] | 0.02/0.02 | 0.02/0.02 | 0.02/0.04 | 0.04/0.02 |
| Max. permitted finger length | [mm] | 38 | 38 | 38 | 38 |
| Max. permitted weight per finger | [kg] | 0.05 | 0.05 | 0.05 | 0.05 |
| IP class | | 40 | 40 | 40 | 40 |
| Min./max. ambient temperature | [°C] | -10/90 | -10/90 | -10/90 | -10/90 |
| Repeat accuracy | [mm] | 0.01 | 0.01 | 0.01 | 0.01 |
| Cleanroom class ISO-classification 14644-1 | | 5 | 5 | 5 | 5 |

## Main view

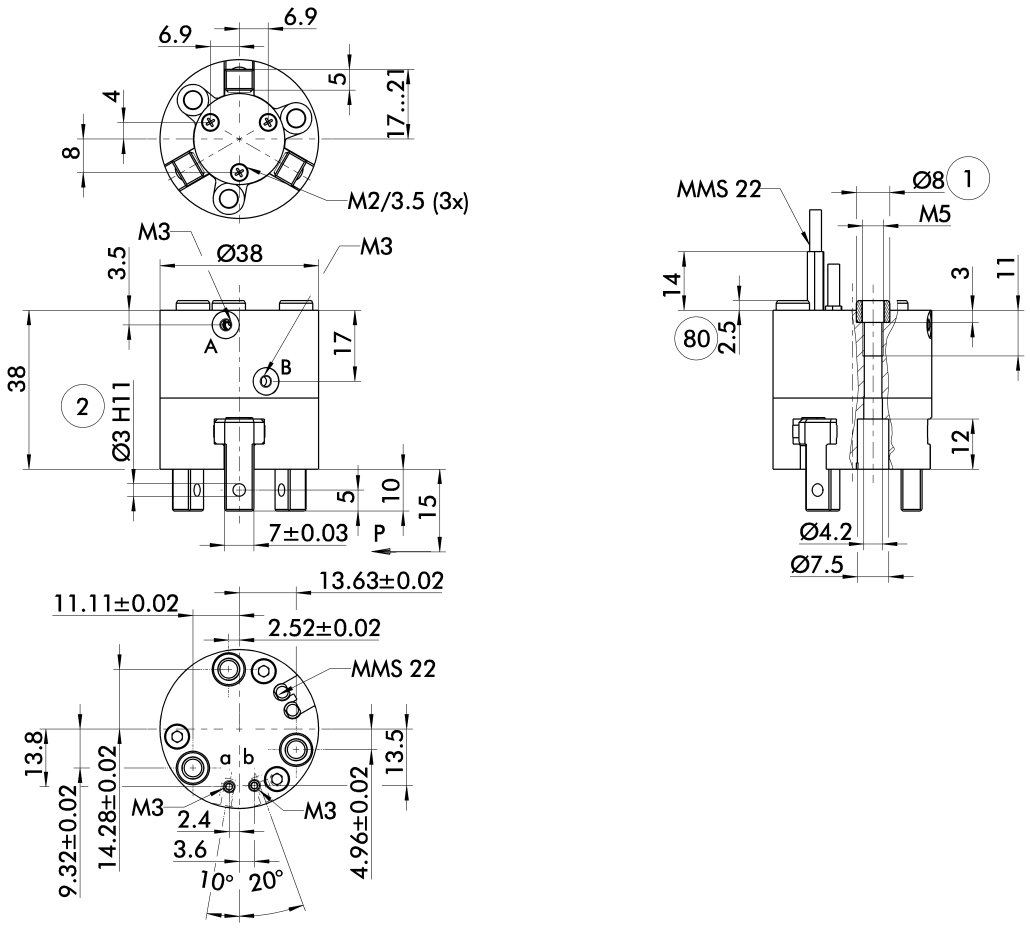


The drawing shows the gripper in the basic version with closed jaws, the dimensions do not include the options described below.

ⓘ The SDV-P pressure maintenance valve can also be used for I.D. or O.D. gripping alternatively or in addition to the spring-loaded, mechanical gripping force maintenance device (see "Accessories" catalog section).

A, a Main/direct connection, gripper opening
B, b Main/direct connection, gripper closing
① Gripper connection
② Finger connection
(80) Depth of the centering sleeve hole in the matching part

## Hose-free direct connection

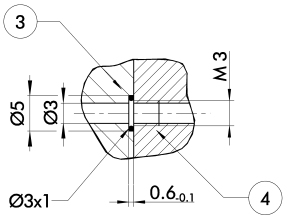


③ Adapter
④ Gripper

The direct connection is used for supplying compressed air without hoses. Instead, the pressure medium is fed through bore-holes in the mounting plate.

## AS/IS gripping force maintenance device

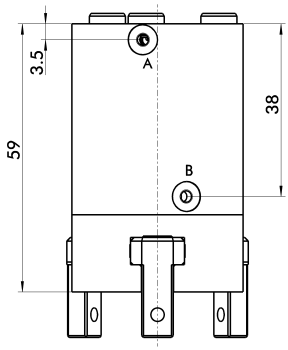


The mechanical gripping force maintenance device ensures a minimum gripping force even in case of pressure drop. This acts as closing force in the AS version, and as opening force in the IS version. In addition, the gripping force maintenance device can also be used for increasing the gripping force or for single-acting gripping.

## Flexible Position Sensor

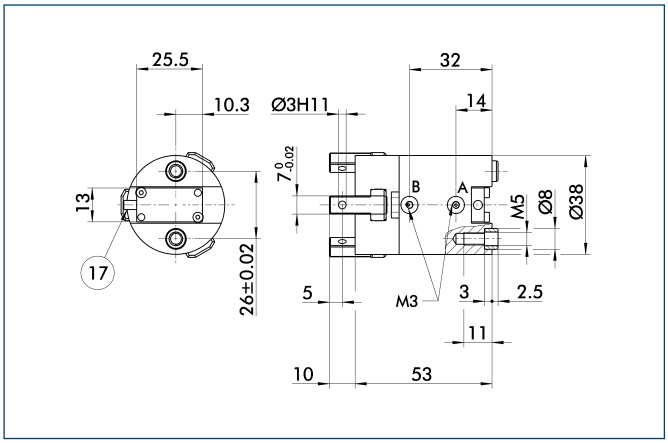


⑰ Cable outlet

The FPS flexible position sensor can distinguish between five freely programmable ranges or switching points for the stroke of a gripper and can be used in conjunction with a PC as a measuring system.

## Modular Assembly Automation

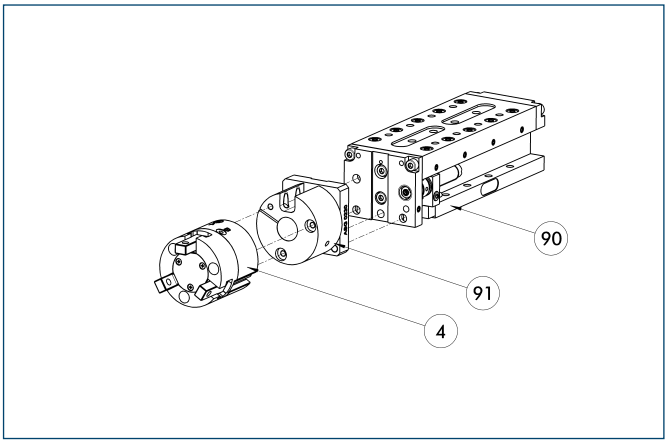


④ Gripper
⑨① ASG
⑨⓪ CLM

This gripper can be combined with the standard linear modules LM, KLM, CLM and ELM of the GEMOTEC modular system. For more information see our main catalog "Modular Assembly Automation".

## Finger blanks

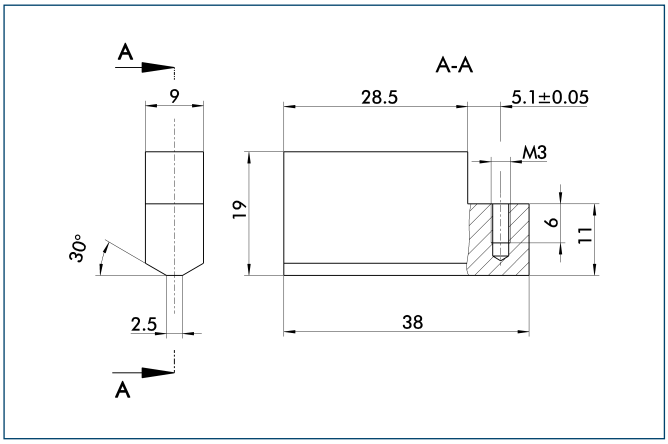


Finger blanks for customized subsequent machining

| Description | ID | Material | Scope of delivery |
|---|---|---|---|
| Finger blanks | | | |
| ABR 38 | **0340529** | Aluminum | 3 |

## Programmable magnetic switch

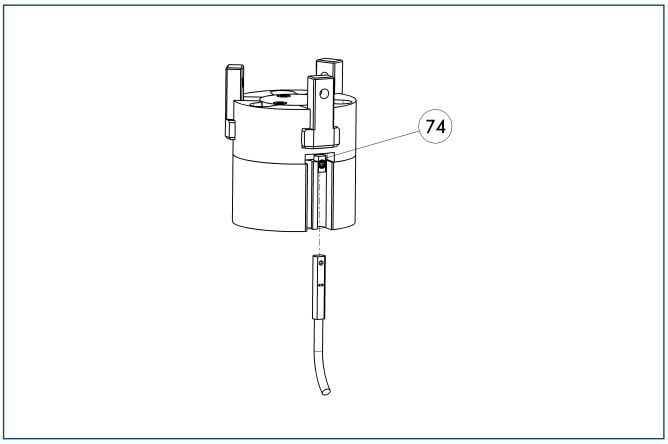


⑦④ Stop for MMS-P

Position monitoring with two programmable positions per sensor. The end position monitoring is mounted in the C-slot.

| Description | ID | Recommended product |
|---|---|---|
| Programmable magnetic switch | | |
| MMS-P 22-S-M8-PNP | **0301370** | • |
| MMSK-P 22-S-PNP | **0301371** | |
| Connection cables | | |
| KA BG08-L 4P-0500 | **0307767** | |
| KA BG08-L 4P-1000 | **0307768** | |
| KA BW08-L 4P-0500 | **0307765** | |
| KA BW08-L 4P-1000 | **0307766** | |
| Sensor Distributor | | |
| V2-M8-4P-2XM8-3P | **0301380** | |

ⓘ Please note the minimum permitted bending radii for the sensor cables, which are generally 35 mm.
ⓘ Per gripper one sensor (closer/NO) is required, optionally a cable extension.

You can find more detailed information and individual parts of the above-mentioned accessories in the "Accessories" catalog section.

## Electronic magnetic switches

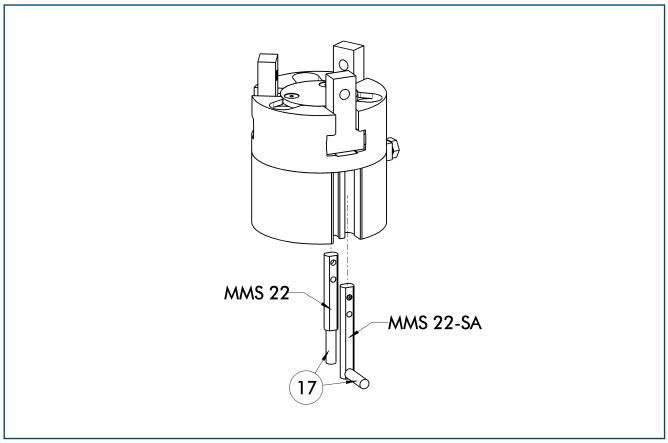


⑰ Cable outlet

End position monitoring for mounting in the C-slot

| Description | ID | Recommended product |
|---|---|---|
| Electronic magnetic switches | | |
| MMS 22-S-M5-PNP | **0301438** | |
| MMS 22-S-M5-NPN | **0301439** | |
| MMS 22-S-M8-PNP | **0301432** | • |
| MMS 22-S-M8-NPN | **0301433** | |
| MMSK 22-S-PNP | **0301434** | |
| MMSK 22-S-NPN | **0301435** | |
| Electronic magnetic switches with lateral cable outlet | | |
| MMS 22-S-M5-PNP-SA | **0301448** | |
| MMS 22-S-M5-NPN-SA | **0301449** | |
| MMS 22-S-M8-PNP-SA | **0301442** | • |
| MMS 22-S-M8-NPN-SA | **0301443** | |
| MMSK 22-S-PNP-SA | **0301444** | |
| MMSK 22-S-NPN-SA | **0301445** | |
| Connection cables | | |
| KA BG05-L 3P-0300 | **0301652** | |
| KA BG08-L 3P-0300-PNP | **0301622** | |
| KA BG08-L 3P-0500-PNP | **0301623** | |
| KA BW05-L 3P-0300 | **0301650** | |
| KA BW08-L 3P-0300-NPN | **0301602** | |
| KA BW08-L 3P-0300-PNP | **0301594** | |
| KA BW08-L 3P-0500-NPN | **9641116** | |
| KA BW08-L 3P-0500-PNP | **0301502** | |
| Cable extensions | | |
| KV BW08-SG08 3P-0030-PNP | **0301495** | |
| KV BW08-SG08 3P-0100-PNP | **0301496** | |
| KV BW08-SG08 3P-0200-PNP | **0301497** | |

ⓘ Please note the minimum permitted bending radii for the sensor cables, which are generally 35 mm.

## Flexible Position Sensor

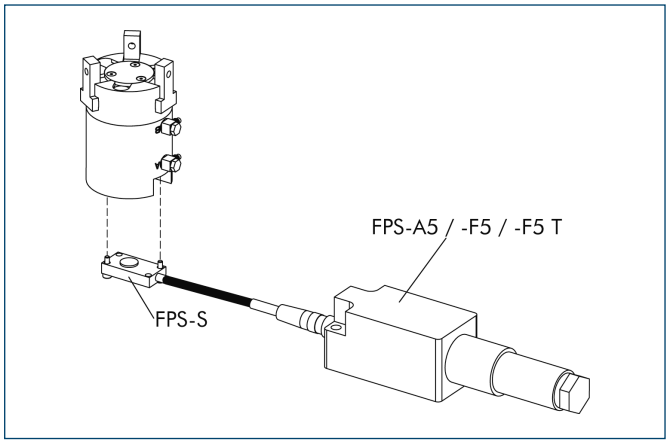


Flexible position monitoring of up to five positions

| Description | ID |
|---|---|
| Electronic Processor | |
| FPS-F5 | **0301805** |
| FPS-F5 T | **0301807** |
| Sensor | |
| FPS-S 13 | **0301705** |

ⓘ When using a FPS system, a FPS sensor (FPS-S) and a control unit (FPS-F5 / F5 T or A5) are required for each gripper as well as a mounting kit (AS), if listed. Cable extensions (KV) are available as options in the “Accessories” catalog section.

You can find more detailed information and individual parts of the above-mentioned accessories in the “Accessories” catalog section.

# MPZ 45

**Pneumatic • 3-Finger Centric Gripper • Gripper for small components**



## Gripping force, I.D. gripping

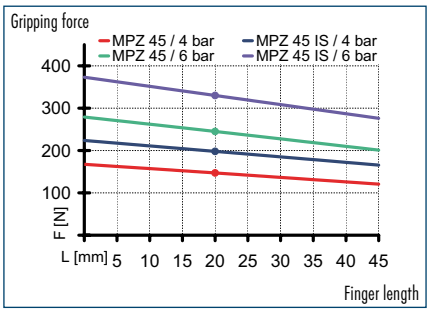


## Gripping force, O.D. gripping

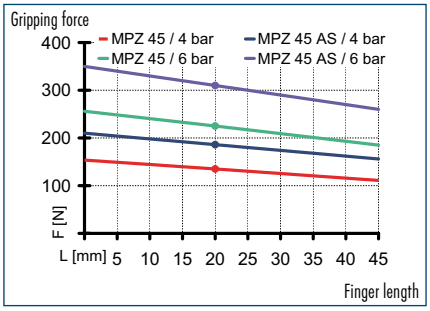


## Finger load

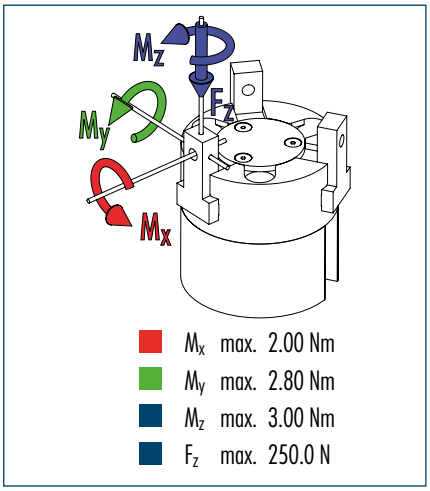


ⓘ The indicated moments and forces are static values, apply per base jaw and may occur simultaneously. $M_y$ may arise in addition to the moment generated by the gripping force itself. If the max. permitted finger weight is exceeded, it is imperative to throttle the air pressure so that the jaw movement occurs without any hitting or bouncing. Service life may be reduced.

## Technical data

| Description | | MPZ 45 | MPZ 45 FPS | MPZ 45-AS | MPZ 45-IS |
|---|---|---|---|---|---|
| **ID** | | **0340530** | **0340533** | **0340531** | **0340532** |
| Stroke per finger | [mm] | 5 | 5 | 5 | 5 |
| Closing force | [N] | 225 | 225 | 310 | |
| Opening force | [N] | 245 | 245 | | 340 |
| Min. spring force | [N] | | | 85 | 95 |
| Weight | [kg] | 0.22 | 0.29 | 0.28 | 0.28 |
| Recommended workpiece weight | [kg] | 1.15 | 1.15 | 1.15 | 1.15 |
| Air consumption per double stroke | [cm³] | 9.85 | 9.85 | 9.85 | 9.85 |
| Min./max. operating pressure | [bar] | 2/8 | 2/8 | 4/6.5 | 4/6.5 |
| Nominal operating pressure | [bar] | 6 | 6 | 6 | 6 |
| Closing/opening time | [s] | 0.05/0.05 | 0.05/0.05 | 0.04/0.05 | 0.05/0.04 |
| Max. permitted finger length | [mm] | 45 | 45 | 45 | 45 |
| Max. permitted weight per finger | [kg] | 0.08 | 0.08 | 0.08 | 0.08 |
| IP class | | 40 | 40 | 40 | 40 |
| Min./max. ambient temperature | [°C] | -10/90 | -10/90 | -10/90 | -10/90 |
| Repeat accuracy | [mm] | 0.01 | 0.01 | 0.01 | 0.01 |
| Cleanroom class ISO-classification 14644-1 | | 5 | 5 | 5 | 5 |

## Main view

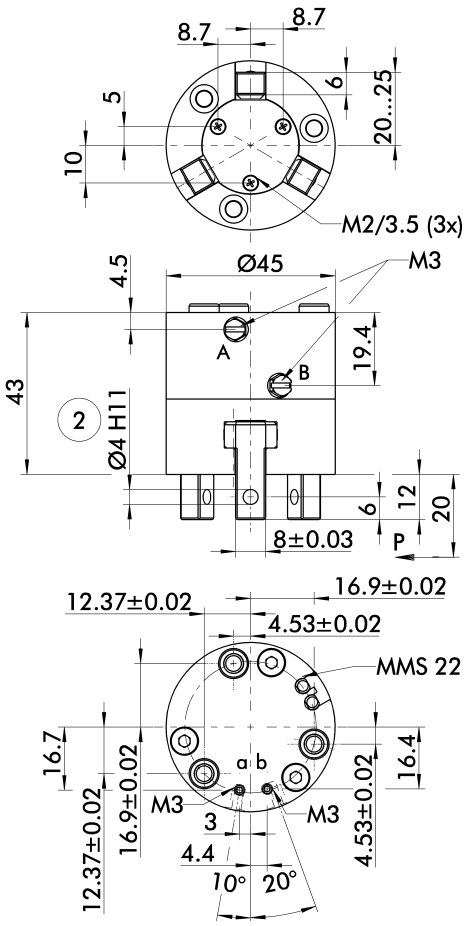


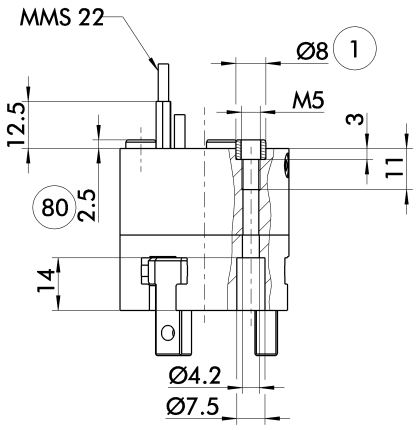


The drawing shows the gripper in the basic version with closed jaws, the dimensions do not include the options described below.

ⓘ The SDV-P pressure maintenance valve can also be used for I.D. or O.D. gripping alternatively or in addition to the spring-loaded, mechanical gripping force maintenance device (see "Accessories" catalog section).

A, a Main/direct connection, gripper opening
B, b Main/direct connection, gripper closing
① Gripper connection
② Finger connection
(80) Depth of the centering sleeve hole in the matching part

## Hose-free direct connection

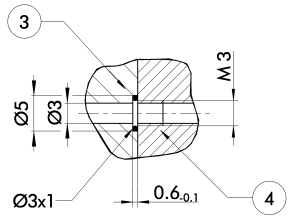


③ Adapter
④ Gripper

The direct connection is used for supplying compressed air without hoses. Instead, the pressure medium is fed through bore-holes in the mounting plate.

## AS/IS gripping force maintenance device

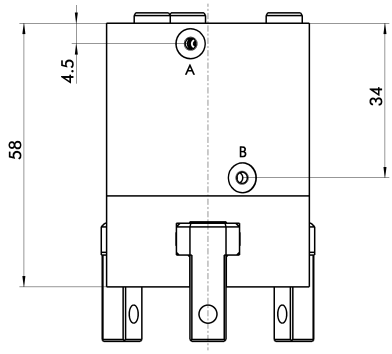


The mechanical gripping force maintenance device ensures a minimum gripping force even in case of pressure drop. This acts as closing force in the AS version, and as opening force in the IS version. In addition, the gripping force maintenance device can also be used for increasing the gripping force or for single-acting gripping.

## Flexible Position Sensor

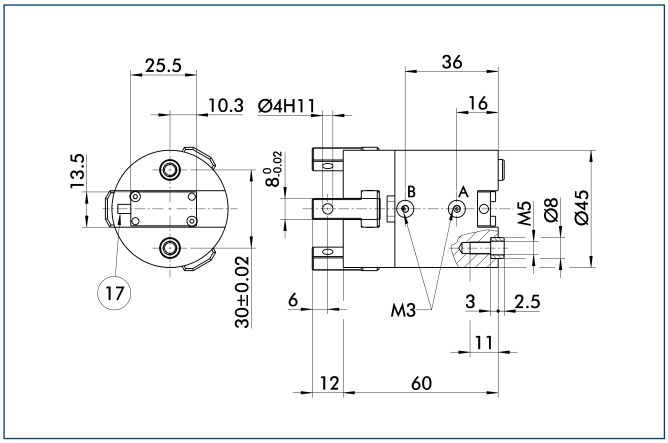


(17) Cable outlet

The FPS flexible position sensor can distinguish between five freely programmable ranges or switching points for the stroke of a gripper and can be used in conjunction with a PC as a measuring system.

## Modular Assembly Automation

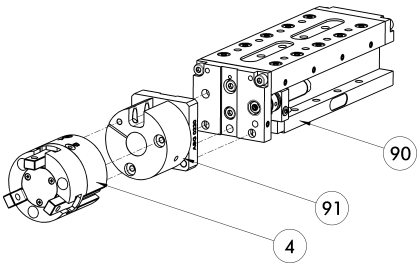


(4) Gripper
(90) CLM
(91) ASG

This gripper can be combined with the standard linear modules LM, KLM, CLM and ELM of the GEMOTEC modular system. For more information see our main catalog "Modular Assembly Automation".

## Finger blanks

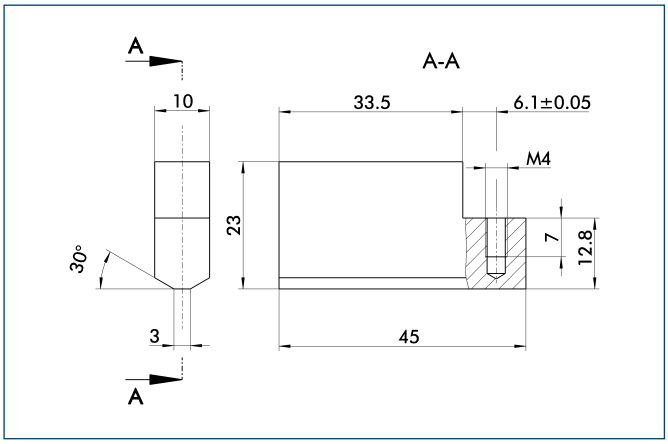


Finger blanks for customized subsequent machining

| Description | ID | Material | Scope of delivery |
|---|---|---|---|
| Finger blanks | | | |
| ABR 45 | **0340539** | Aluminum | 3 |

## Programmable magnetic switch

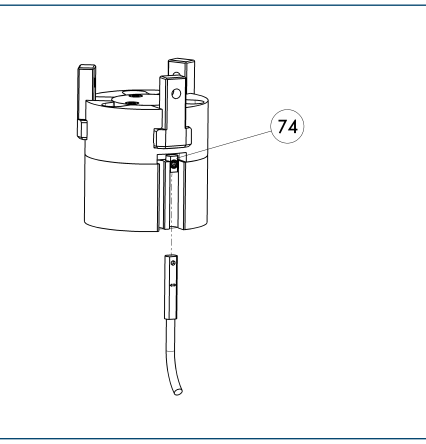


(74) Stop for MMS-P

Position monitoring with two programmable positions per sensor. The end position monitoring is mounted in the C-slot.

| Description | ID | Recommended product |
|---|---|---|
| Programmable magnetic switch | | |
| MMS-P 22-S-M8-PNP | **0301370** | • |
| MMSK-P 22-S-PNP | **0301371** | |
| Connection cables | | |
| KA BG08-L 4P-0500 | **0307767** | |
| KA BG08-L 4P-1000 | **0307768** | |
| KA BW08-L 4P-0500 | **0307765** | |
| KA BW08-L 4P-1000 | **0307766** | |
| Sensor Distributor | | |
| V2-M8-4P-2XM8-3P | **0301380** | |

ⓘ Please note the minimum permitted bending radii for the sensor cables, which are generally 35 mm.
ⓘ Per gripper one sensor (closer/NO) is required, optionally a cable extension.


You can find more detailed information and individual parts of the above-mentioned accessories in the "Accessories" catalog section.

## Electronic magnetic switches

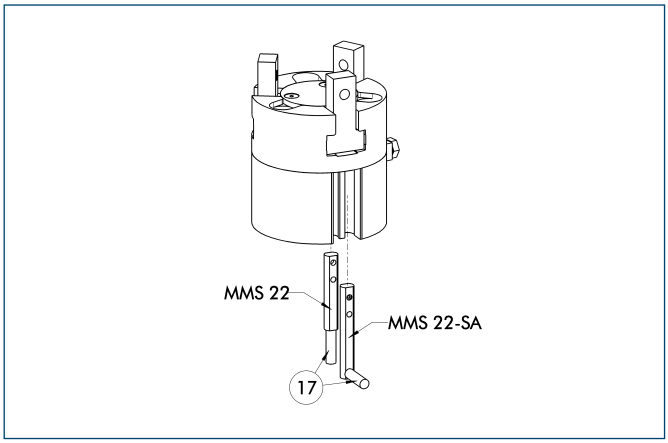


⑰ Cable outlet

End position monitoring for mounting in the C-slot

| Description | ID | Recommended product |
|---|---|---|
| Electronic magnetic switches | | |
| MMS 22-S-M5-PNP | **0301438** | |
| MMS 22-S-M5-NPN | **0301439** | |
| MMS 22-S-M8-PNP | **0301432** | • |
| MMS 22-S-M8-NPN | **0301433** | |
| MMSK 22-S-PNP | **0301434** | |
| MMSK 22-S-NPN | **0301435** | |
| Electronic magnetic switches with lateral cable outlet | | |
| MMS 22-S-M5-PNP-SA | **0301448** | |
| MMS 22-S-M5-NPN-SA | **0301449** | |
| MMS 22-S-M8-PNP-SA | **0301442** | • |
| MMS 22-S-M8-NPN-SA | **0301443** | |
| MMSK 22-S-PNP-SA | **0301444** | |
| MMSK 22-S-NPN-SA | **0301445** | |
| Connection cables | | |
| KA BG05-L 3P-0300 | **0301652** | |
| KA BG08-L 3P-0300-PNP | **0301622** | |
| KA BG08-L 3P-0500-PNP | **0301623** | |
| KA BW05-L 3P-0300 | **0301650** | |
| KA BW08-L 3P-0300-NPN | **0301602** | |
| KA BW08-L 3P-0300-PNP | **0301594** | |
| KA BW08-L 3P-0500-NPN | **9641116** | |
| KA BW08-L 3P-0500-PNP | **0301502** | |
| Cable extensions | | |
| KV BW08-SG08 3P-0030-PNP | **0301495** | |
| KV BW08-SG08 3P-0100-PNP | **0301496** | |
| KV BW08-SG08 3P-0200-PNP | **0301497** | |

ⓘ Please note the minimum permitted bending radii for the sensor cables, which are generally 35 mm.

## Flexible Position Sensor

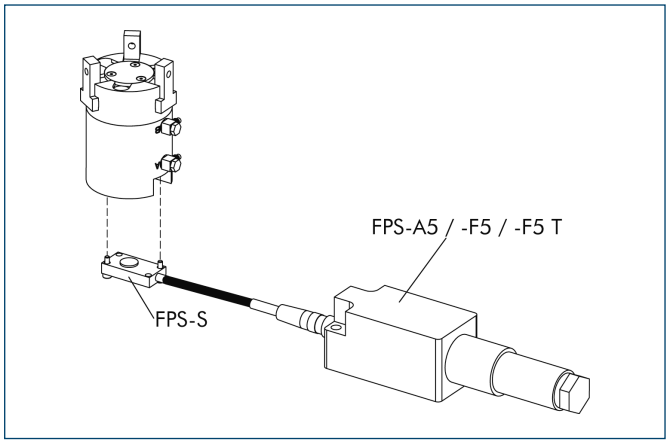


Flexible position monitoring of up to five positions

| Description | ID |
|---|---|
| Electronic Processor | |
| FPS-F5 | **0301805** |
| FPS-F5 T | **0301807** |
| Sensor | |
| FPS-S 13 | **0301705** |

ⓘ When using a FPS system, a FPS sensor (FPS-S) and a control unit (FPS-F5 / F5 T or A5) are required for each gripper as well as a mounting kit (AS), if listed. Cable extensions (KV) are available as options in the “Accessories” catalog section.

You can find more detailed information and individual parts of the above-mentioned accessories in the “Accessories” catalog section.

# LGZ

**Pneumatic • 3-Finger Centric Gripper • Universal Gripper**

**Sizes**
16 ... 50

**Weight**
0.1 kg ... 0.99 kg

**Gripping force**
120 N ... 1470 N

**Stroke per finger**
3 mm ... 7 mm

**Workpiece weight**
0.6 kg ... 5.7 kg

## Application example

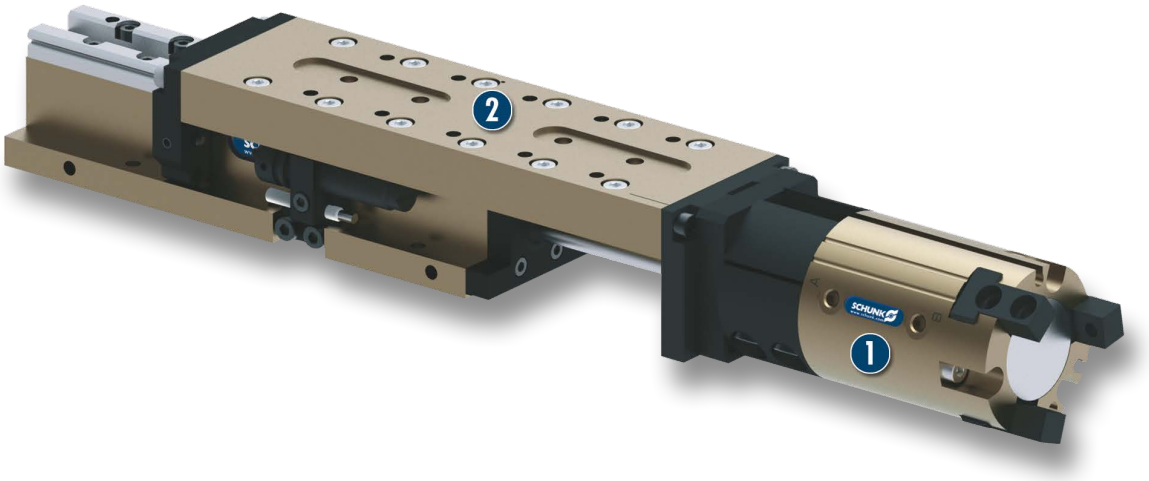


**Pneumatic transfer unit for round components**

1. 3-Finger Centric Gripper LGZ
2. Linear module CLM

## Universal Gripper
universal 3-Finger Centric Gripper with T-slot slideway and excellent cost-performance ratio

## Field of application
for universal use in clean and slightly dirty environments



## Your advantages and benefits

**Function optimized gripper type**
for maximum cost effectiveness

**Stable, ground T-groove slideway**
for highest precision in handling

**Matching SCHUNK C-slot switch**
for process reliable position interrogation

**Hard-anodized or hardened functional components**
for long lifetime

**Centering sleeves**
for a repeat accurate exchange of grippers and fingers

**Compact dimensions**
for minimized interfering contours

## General note to the series

**Principle of function**
Wedge-hook kinematics

**Housing material**
Aluminum alloy, hard-anodized

**Base jaw material**
Steel

**Actuation**
pneumatic, with filtered compressed air (10 microns): dry, lubricated or non-lubricated
Pressure medium: Required quality class of compressed air according to DIN ISO 8573-1: 6 4 4

**Warranty**
24 months (details, general terms and conditions and operation manuals can be downloaded under www.schunk.com)

**Scope of delivery**
Centering elements, assembly and operating instruction with manufacturer's declaration

## Sectional diagram

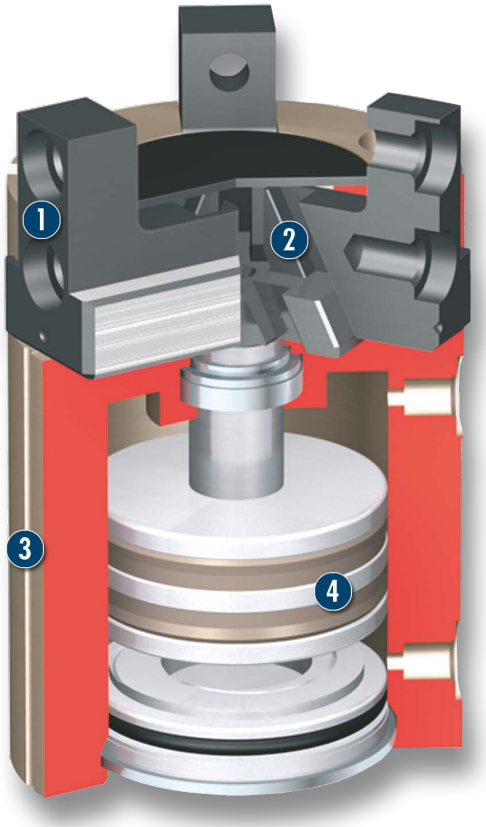


1 **Base jaw**
for the connection of workpiece-specific gripper fingers

2 **Wedge-hook design**
for high power transmission and centric gripping

3 **Housing**
weight-optimized through application of hard-anodized, high-strength aluminum alloy

4 **Drive**
pneumatic, powerful and easy to handle

## Functional description

The piston is moved up and down by compressed air.
Through its angled active surfaces, the wedge hook transforms this movement into the lateral, synchronous gripping movement of both base jaws.

## Options and special information

Monitoring with a SCHUNK MMS 22 or RMS 22 sensor is not possible. The use of the recommended sensors MZN and RZN is not compulsory.

## Accessories

Accessories from SCHUNK – the suitable supplement for maximum functionality, reliability and performance of all automation modules.

### Centering sleeves



### Fittings



### Magnetic Switches



### Sensor cables



### Pressure maintenance valve





### Sensor Distributor

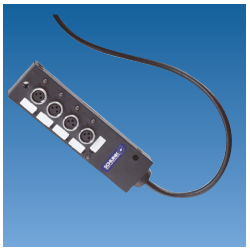

ⓘ For the exact size of the required accessories, availability of this size and the designation and ID, please refer to the additional views at the end of the size in question. You will find more detailed information on our accessory range in the “Accessories” catalog section.

## General note to the series

### Gripping force

is the arithmetic total of the gripping force applied to each finger at distance P (see illustration) measured from the upper edge of the gripper.

### Finger length

The finger length is measured from the upper edge of the gripper housing in the direction of the main axis.

### Repeat accuracy

is defined as the spread of the limit position after 100 consecutive strokes.

### Workpiece weight

The recommended workpiece weight is calculated for a force-type connection with a coefficient of friction of 0.1 and a safety factor of 2 against slippage of the workpiece on acceleration due to gravity g. Considerably heavier workpiece weights are permitted with form-fit gripping.

### Closing and opening times

Closing and opening times are purely the times that the base jaws or fingers are in motion. Valve switching times, hose filling times or PLC reaction times are not included in the above times and must be taken into consideration when determining cycle times.

# LGZ 16

**Pneumatic • 3-Finger Centric Gripper • Universal Gripper**



## Gripping force, I.D. gripping

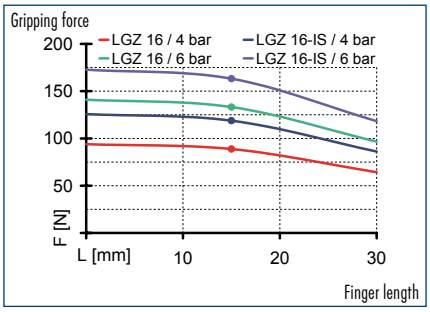


## Gripping force, O.D. gripping

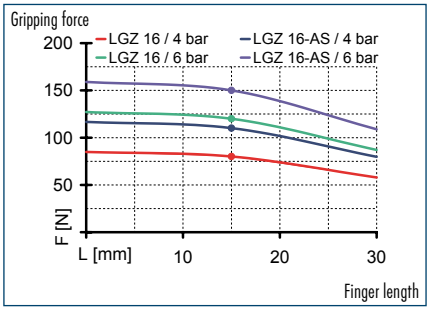


## Finger load

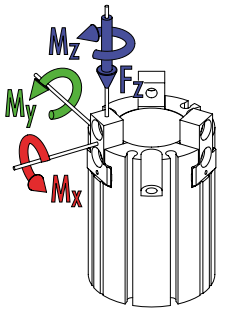


- $M_x$ max. 0.50 Nm
- $M_y$ max. 1.80 Nm
- $M_z$ max. 1.40 Nm
- $F_z$ max. 100.0 N

ⓘ The indicated moments and forces are static values, apply per base jaw and may occur simultaneously. $M_y$ may arise in addition to the moment generated by the gripping force itself. If the max. permitted finger weight is exceeded, it is imperative to throttle the air pressure so that the jaw movement occurs without any hitting or bouncing. Service life may be reduced.

## Technical data

| Description | | LGZ 16 | LGZ 16-AS | LGZ 16-IS |
|---|---|---|---|---|
| **ID** | | **0312930** | **0312931** | **0312932** |
| Stroke per finger | [mm] | 3 | 3 | 3 |
| Closing force | [N] | 120 | 150 | |
| Opening force | [N] | 144 | | 174 |
| Min. spring force | [N] | | 30 | 30 |
| Weight | [kg] | 0.1 | 0.1 | 0.1 |
| Recommended workpiece weight | [kg] | 0.6 | 0.6 | 0.6 |
| Air consumption per double stroke | [cm³] | 4 | 4 | 4 |
| Min./max. operating pressure | [bar] | 2/8 | 4/6.5 | 4/6.5 |
| Nominal operating pressure | [bar] | 6 | 6 | 6 |
| Closing/opening time | [s] | 0.02/0.02 | 0.01/0.04 | 0.04/0.01 |
| Max. permitted finger length | [mm] | 30 | 30 | 30 |
| Max. permitted weight per finger | [kg] | 0.03 | 0.03 | 0.03 |
| IP class | | 40 | 40 | 40 |
| Min./max. ambient temperature | [°C] | -10/90 | -10/90 | -10/90 |
| Repeat accuracy | [mm] | 0.02 | 0.02 | 0.02 |

## Main view

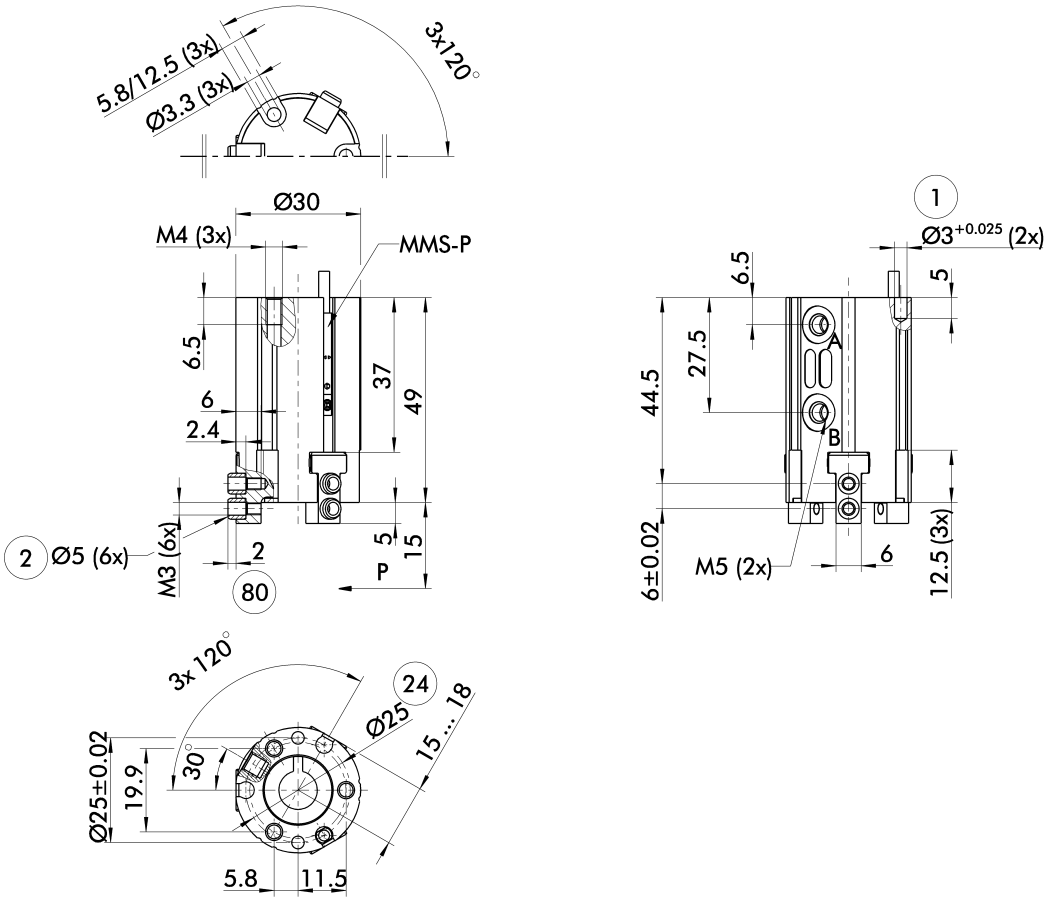


The drawing shows the gripper in the basic version with closed jaws, the dimensions do not include the options described below.

ⓘ The SDV-P pressure maintenance valve can also be used for I.D. or O.D. gripping alternatively or in addition to the spring-loaded, mechanical gripping force maintenance device (see "Accessories" catalog section).

A, a Main/direct connection, gripper opening
B, b Main/direct connection, gripper closing
① Gripper connection
② Finger connection
㉔ Bolt circle
㊽ Depth of the centering sleeve hole in the matching part

## Programmable magnetic switch

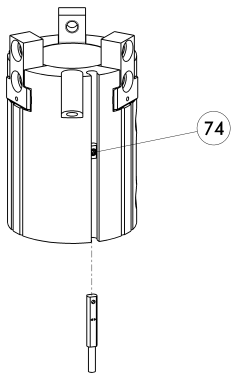


㉞ Stop for MMS-P

Position monitoring with two programmable positions per sensor. The end position monitoring is mounted in the C-slot.

| Description | ID | Recommended product |
|---|---|---|
| Programmable magnetic switch | | |
| MMS-P 22-S-M8-PNP | **0301370** | • |
| MMSK-P 22-S-PNP | **0301371** | |
| Connection cables | | |
| KA BG08-L 4P-0500 | **0307767** | |
| KA BG08-L 4P-1000 | **0307768** | |
| KA BW08-L 4P-0500 | **0307765** | |
| KA BW08-L 4P-1000 | **0307766** | |
| Sensor Distributor | | |
| V2-M8-4P-2XM8-3P | **0301380** | |

ⓘ Please note the minimum permitted bending radii for the sensor cables, which are generally 35 mm.
ⓘ Per gripper one sensor (closer/NO) is required, optionally a cable extension.

You can find more detailed information and individual parts of the above-mentioned accessories in the "Accessories" catalog section.

# LGZ 32

**Pneumatic • 3-Finger Centric Gripper • Universal Gripper**



## Gripping force, I.D. gripping

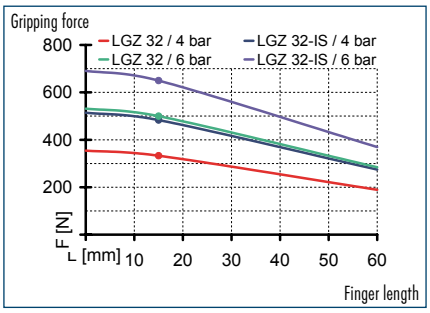


## Gripping force, O.D. gripping

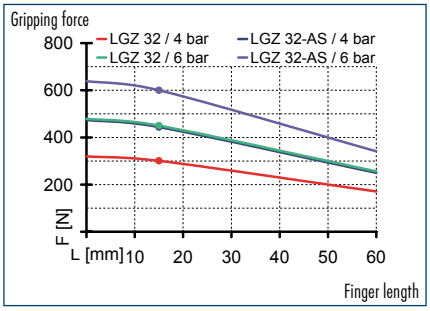


## Finger load

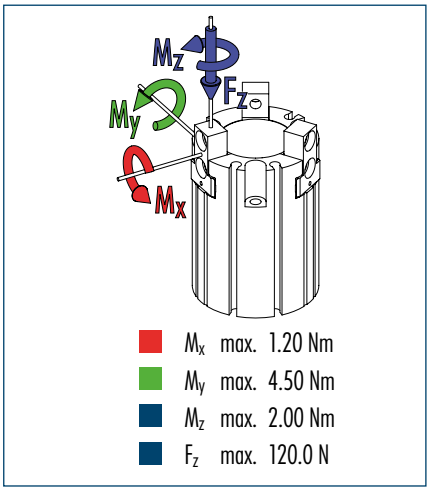


ⓘ The indicated moments and forces are static values, apply per base jaw and may occur simultaneously. $M_y$ may arise in addition to the moment generated by the gripping force itself. If the max. permitted finger weight is exceeded, it is imperative to throttle the air pressure so that the jaw movement occurs without any hitting or bouncing. Service life may be reduced.

## Technical data

| Description | | LGZ 32 | LGZ 32-AS | LGZ 32-IS |
|---|---|---|---|---|
| **ID** | | **0312933** | **0312934** | **0312935** |
| Stroke per finger | [mm] | 4 | 4 | 4 |
| Closing force | [N] | 450 | 600 | |
| Opening force | [N] | 540 | | 590 |
| Min. spring force | [N] | | 150 | 150 |
| Weight | [kg] | 0.32 | 0.35 | 0.35 |
| Recommended workpiece weight | [kg] | 2.25 | 2.25 | 2.25 |
| Air consumption per double stroke | [cm³] | 21 | 21 | 21 |
| Min./max. operating pressure | [bar] | 2/8 | 4/6.5 | 4/6.5 |
| Nominal operating pressure | [bar] | 6 | 6 | 6 |
| Closing/opening time | [s] | 0.02/0.02 | 0.01/0.03 | 0.03/0.01 |
| Max. permitted finger length | [mm] | 60 | 60 | 60 |
| Max. permitted weight per finger | [kg] | 0.08 | 0.08 | 0.08 |
| IP class | | 40 | 40 | 40 |
| Min./max. ambient temperature | [°C] | -10/90 | -10/90 | -10/90 |
| Repeat accuracy | [mm] | 0.02 | 0.02 | 0.02 |

## Main view

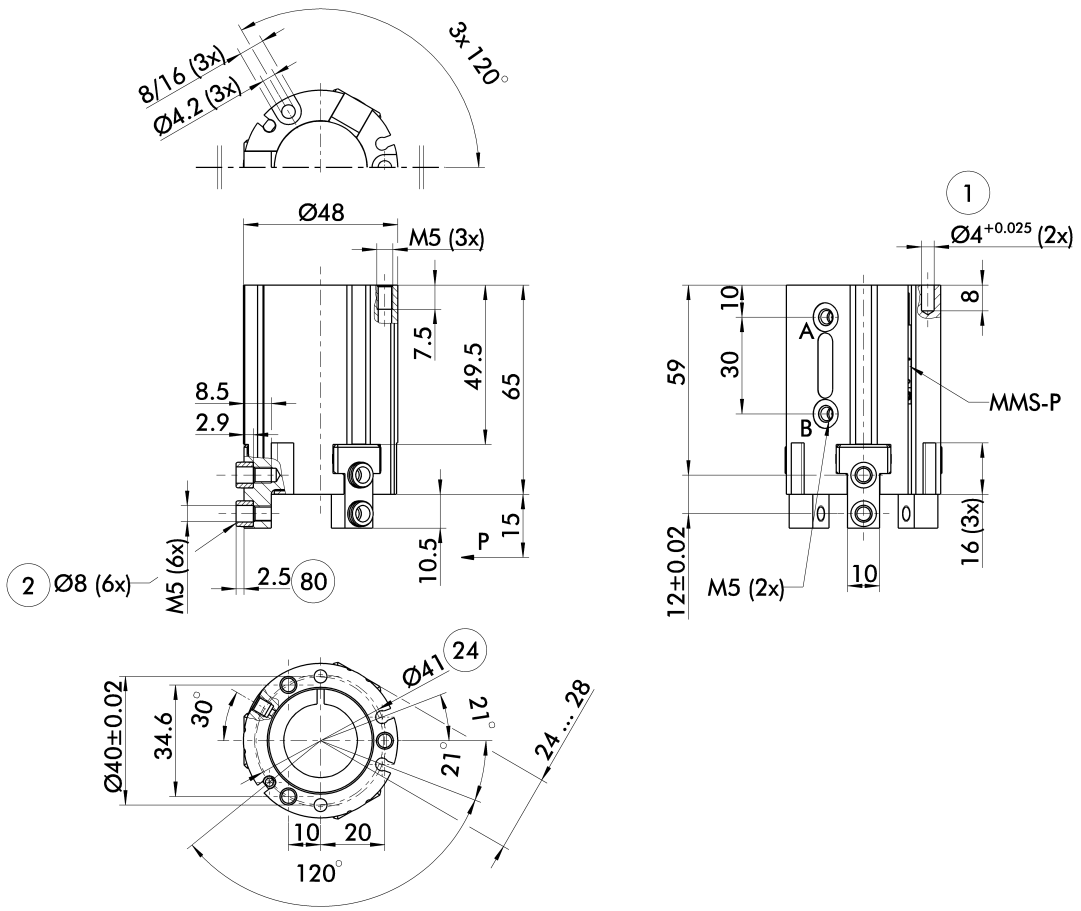


The drawing shows the gripper in the basic version with closed jaws, the dimensions do not include the options described below.

ⓘ The SDV-P pressure maintenance valve can also be used for I.D. or O.D. gripping alternatively or in addition to the spring-loaded, mechanical gripping force maintenance device (see "Accessories" catalog section).

A, a Main/direct connection, gripper opening
B, b Main/direct connection, gripper closing
① Gripper connection
② Finger connection
㉔ Bolt circle
㊽ Depth of the centering sleeve hole in the matching part

## Programmable magnetic switch

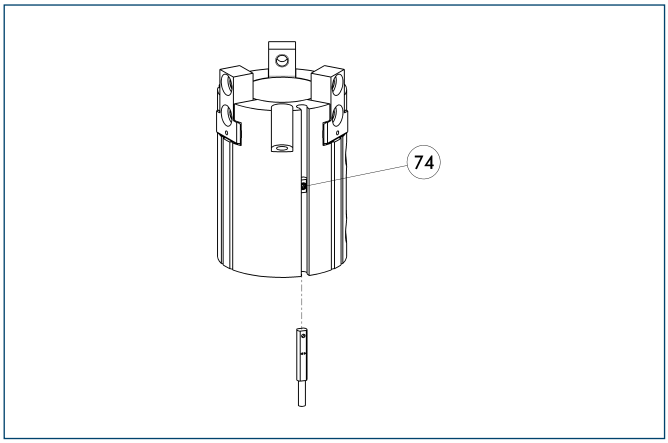


㉞ Stop for MMS-P

Position monitoring with two programmable positions per sensor. The end position monitoring is mounted in the C-slot.

| Description | ID | Recommended product |
|---|---|---|
| Programmable magnetic switch | | |
| MMS-P 22-S-M8-PNP | **0301370** | • |
| MMSK-P 22-S-PNP | **0301371** | |
| Connection cables | | |
| KA BG08-L 4P-0500 | **0307767** | |
| KA BG08-L 4P-1000 | **0307768** | |
| KA BW08-L 4P-0500 | **0307765** | |
| KA BW08-L 4P-1000 | **0307766** | |
| Sensor Distributor | | |
| V2-M8-4P-2XM8-3P | **0301380** | |

ⓘ Please note the minimum permitted bending radii for the sensor cables, which are generally 35 mm.
ⓘ Per gripper one sensor (closer/NO) is required, optionally a cable extension.

You can find more detailed information and individual parts of the above-mentioned accessories in the "Accessories" catalog section.

# LGZ 50

**Pneumatic • 3-Finger Centric Gripper • Universal Gripper**



## Gripping force, I.D. gripping

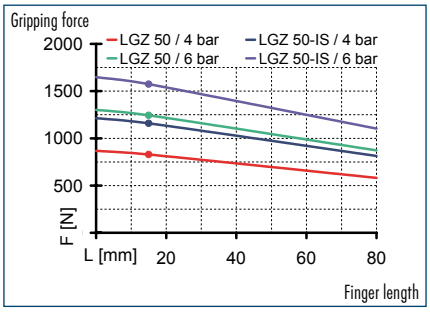


## Gripping force, O.D. gripping

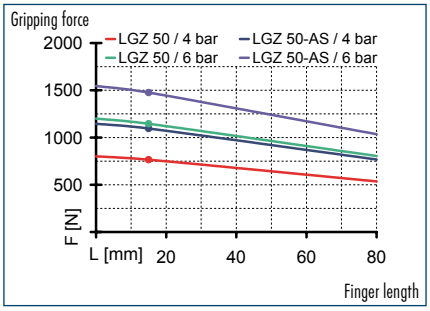


## Finger load

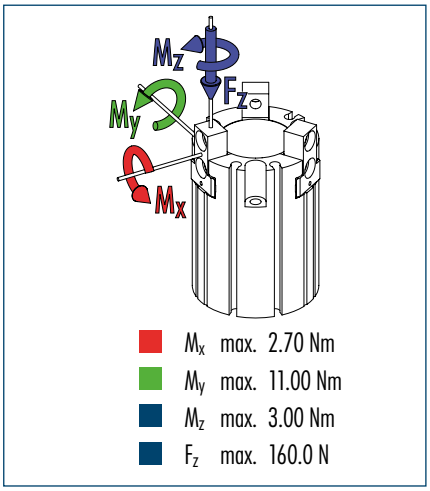


ⓘ The indicated moments and forces are static values, apply per base jaw and may occur simultaneously. $M_y$ may arise in addition to the moment generated by the gripping force itself. If the max. permitted finger weight is exceeded, it is imperative to throttle the air pressure so that the jaw movement occurs without any hitting or bouncing. Service life may be reduced.

## Technical data

| Description | | LGZ 50 | LGZ 50-AS | LGZ 50-IS |
|---|---|---|---|---|
| **ID** | | **0312936** | **0312937** | **0312938** |
| Stroke per finger | [mm] | 7 | 7 | 7 |
| Closing force | [N] | 1140 | 1470 | |
| Opening force | [N] | 1320 | | 1650 |
| Min. spring force | [N] | | 330 | 330 |
| Weight | [kg] | 0.95 | 0.99 | 0.99 |
| Recommended workpiece weight | [kg] | 5.7 | 5.7 | 5.7 |
| Air consumption per double stroke | [cm³] | 93 | 93 | 93 |
| Min./max. operating pressure | [bar] | 2/8 | 4/6.5 | 4/6.5 |
| Nominal operating pressure | [bar] | 6 | 6 | 6 |
| Closing/opening time | [s] | 0.05/0.05 | 0.04/0.07 | 0.07/0.04 |
| Max. permitted finger length | [mm] | 80 | 80 | 80 |
| Max. permitted weight per finger | [kg] | 0.25 | 0.25 | 0.25 |
| IP class | | 40 | 40 | 40 |
| Min./max. ambient temperature | [°C] | -10/90 | -10/90 | -10/90 |
| Repeat accuracy | [mm] | 0.02 | 0.02 | 0.02 |

## Main view

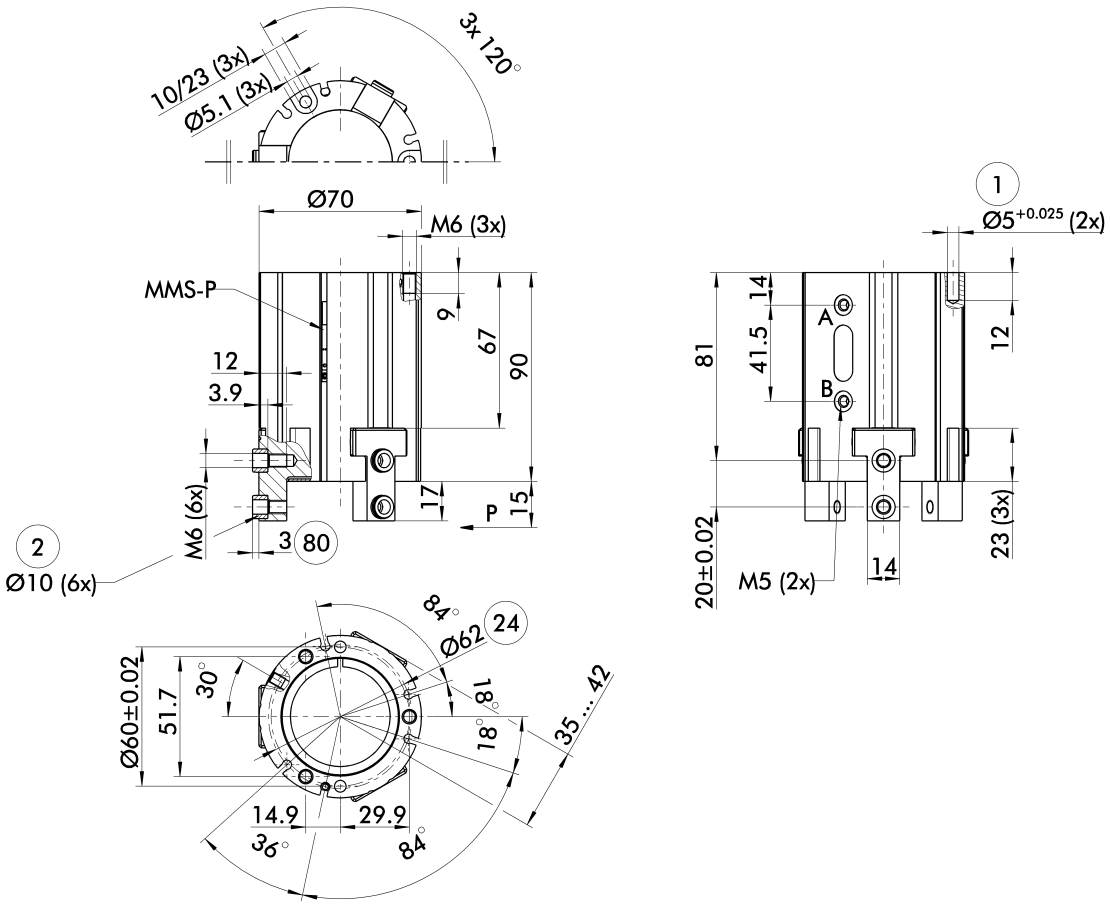


The drawing shows the gripper in the basic version with closed jaws, the dimensions do not include the options described below.

ⓘ The SDV-P pressure maintenance valve can also be used for I.D. or O.D. gripping alternatively or in addition to the spring-loaded, mechanical gripping force maintenance device (see "Accessories" catalog section).

A, a Main/direct connection, gripper opening
B, b Main/direct connection, gripper closing
① Gripper connection
② Finger connection
㉔ Bolt circle
㊽ Depth of the centering sleeve hole in the matching part

## Programmable magnetic switch

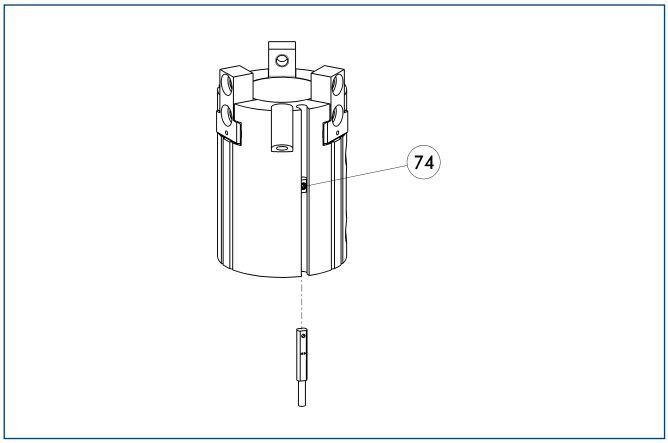


㉞ Stop for MMS-P

Position monitoring with two programmable positions per sensor. The end position monitoring is mounted in the C-slot.

| Description | ID | Recommended product |
|---|---|---|
| Programmable magnetic switch | | |
| MMS-P 22-S-M8-PNP | **0301370** | • |
| MMSK-P 22-S-PNP | **0301371** | |
| Connection cables | | |
| KA BG08-L 4P-0500 | **0307767** | |
| KA BG08-L 4P-1000 | **0307768** | |
| KA BW08-L 4P-0500 | **0307765** | |
| KA BW08-L 4P-1000 | **0307766** | |
| Sensor Distributor | | |
| V2-M8-4P-2XM8-3P | **0301380** | |

ⓘ Please note the minimum permitted bending radii for the sensor cables, which are generally 35 mm.
ⓘ Per gripper one sensor (closer/NO) is required, optionally a cable extension.

You can find more detailed information and individual parts of the above-mentioned accessories in the "Accessories" catalog section.

# PZN-plus

**Pneumatic • 3-Finger Centric Gripper • Universal Gripper**

**Sizes**
40 ... 300

**Weight**
0.13 kg ... 46 kg

**Gripping force**
255 N ... 35500 N

**Stroke per finger**
2 mm ... 35 mm

**Workpiece weight**
1.3 kg ... 127.5 kg

## Application example

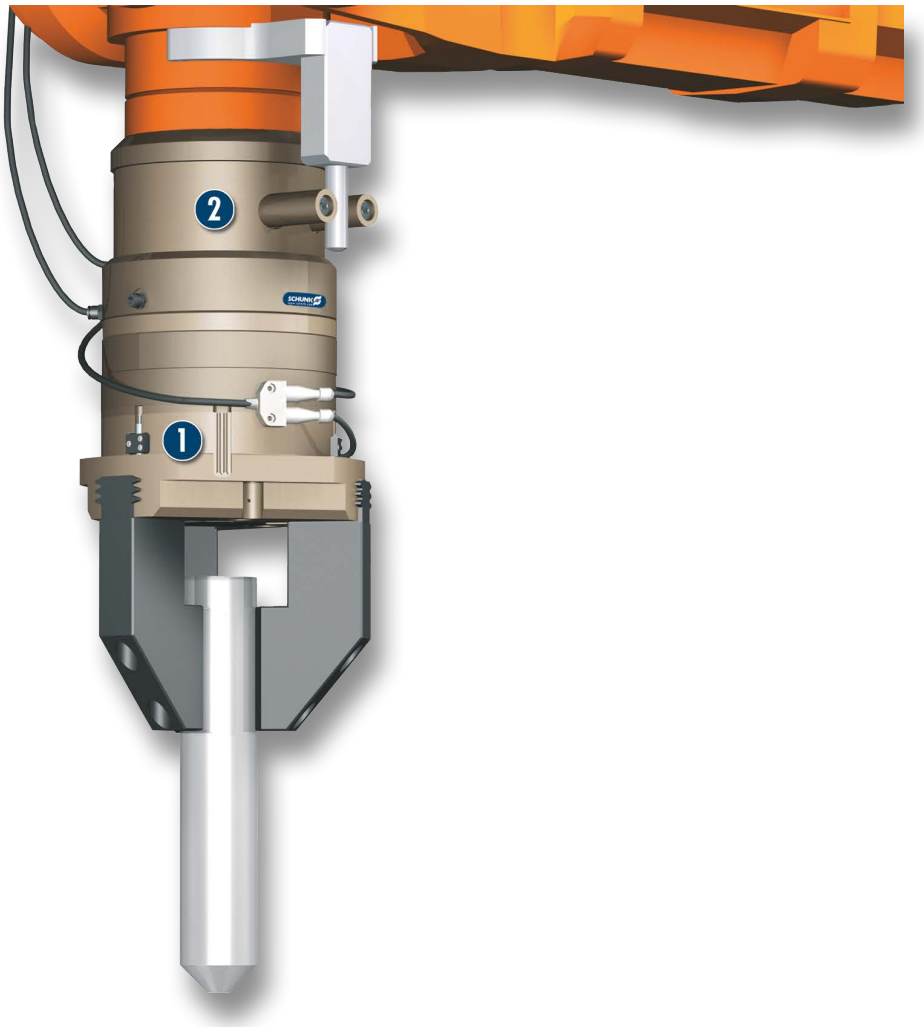


**Insertion tool for assembling small to medium-sized axles. Thanks to the rotary feed-through, the axles can be turned several times to an unlimited extent (> 360°). Slip ring contacts integrated in the rotary feed-through reliably supply the gripper with power.**

1. 3-Finger Centric Gripper PZN-plus
2. Rotary feed-through DDF

## Universal Gripper
universal Concentric Gripper with high gripping force and maximum moments thanks to multi-tooth guidance

## Field of application
Multi-purpose thanks to the diverse range of accessories. Can also be used in fields of application with special requirements to the gripper (temperature, chemical resistance, dirt, and many more).

## Your advantages and benefits

**Robust multi-tooth guidance**
for precise handling

**High maximum moments possible**
suitable for using long gripper fingers

**Wedge-hook design**
for high power transmission and synchronized gripping

**Air supply via hose-free direct connection or screw connections**
for the flexible supply of compressed air in all automation systems

**Comprehensive sensor accessory program**
for versatile interrogation possibilities and control of stroke position

**Manifold options**
for perfect adaption to your case of application (dust protection, high temperature, anti-corrosion and many more)




## General note to the series

**Principle of function**
Wedge-hook kinematics

**Housing material**
Aluminum alloy, hard-anodized

**Base jaw material**
Steel

**Actuation**
pneumatic, with filtered compressed air (10 microns): dry, lubricated or non-lubricated
Pressure medium: Required quality class of compressed air according to DIN ISO 8573-1: 6 4 4

**Warranty**
36 months (details, general terms and conditions and operation manuals can be downloaded under www.schunk.com)

**Scope of delivery**
Brackets for proximity switches, centering sleeves, O-rings for direct connection, assembly and operating manual with manufacturer's declaration

## Sectional diagram

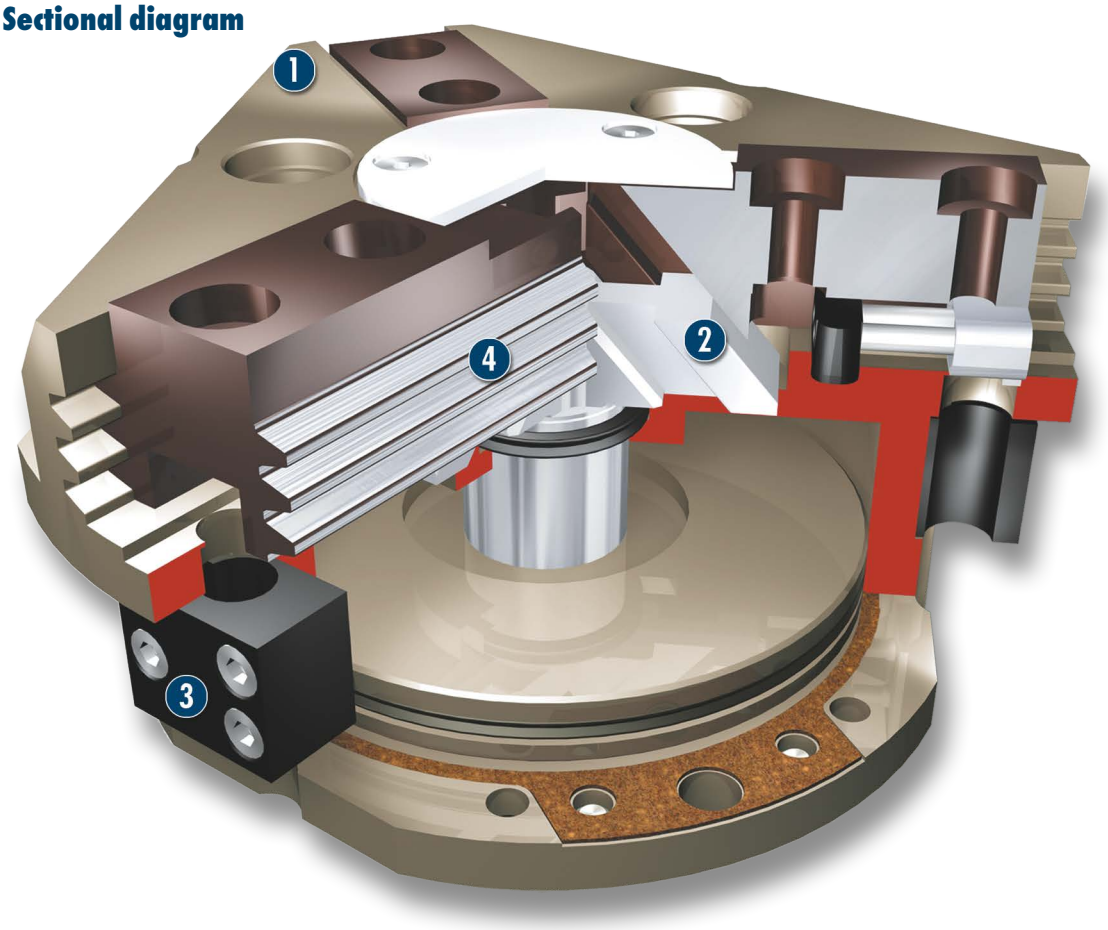


**1 Housing**
weight-optimized through application of hard-anodized, high-strength aluminum alloy

**2 Wedge-hook design**
for high power transmission and centric gripping

**3 Sensor system**
Brackets for proximity switches and adjustable control cams in the housing

**4 Multiple-tooth guidance**
precise gripping through base jaw guidance with a high load capacity and a minimum play

## Functional description

The piston is moved up and down by compressed air.
Through its angled active surfaces, the wedge hook transforms this movement into the lateral, synchronous gripping movement of both base jaws.

## Options and special information

**Dust-protection version**
Absolutely sealed, increased degree of protection against the ingress of materials, for use in dusty environments

**Anti-corrosion version**
for use in corrosion-inducing atmospheres

**High-temperature version**
for use in hot environments

**Force intensified version**
if higher gripping forces are required

## Accessories

Accessories from SCHUNK – the suitable supplement for maximum functionality, reliability and performance of all automation modules.

### Sensor system



### Fittings



### Universal intermediate jaw



### Compensation unit



### Protection cover



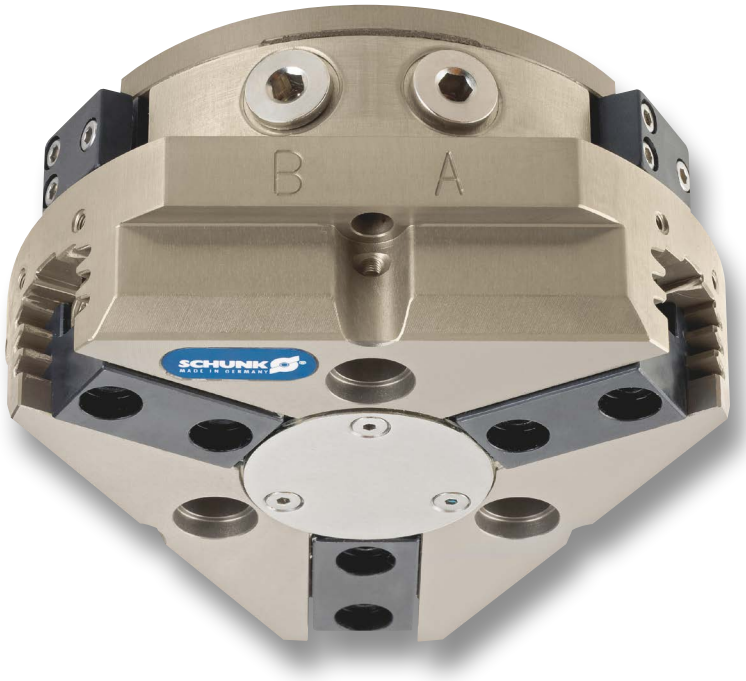


### Sensor cables



### Quick-change Jaw System



### Sensor Distributor

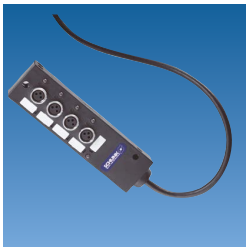

### Pressure maintenance valve



### Finger blanks



### Force measuring jaws




### Analog position sensor

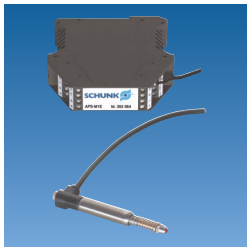

### Flexible Position Sensor

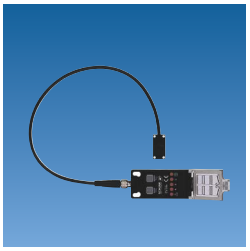

ⓘ For the exact size of the required accessories, availability of this size and the designation and ID, please refer to the additional views at the end of the size in question. You will find more detailed information on our accessory range in the “Accessories” catalog section.

## General note to the series

### Gripping force

is the arithmetic total of the gripping force applied to each finger at distance P (see illustration) measured from the upper edge of the gripper.

### Finger length

The finger length is measured from the upper edge of the gripper housing in the direction of the main axis.

### Repeat accuracy

is defined as the spread of the limit position after 100 consecutive strokes.

### Workpiece weight

The recommended workpiece weight is calculated for a force-type connection with a coefficient of friction of 0.1 and a safety factor of 2 against slippage of the workpiece on acceleration due to gravity g. Considerably heavier workpiece weights are permitted with form-fit gripping.

### Closing and opening times

Closing and opening times are purely the times that the base jaws or fingers are in motion. Valve switching times, hose filling times or PLC reaction times are not included in the above times and must be taken into consideration when determining cycle times.

# PZN-plus 40

**Pneumatic • 3-Finger Centric Gripper • Universal Gripper**

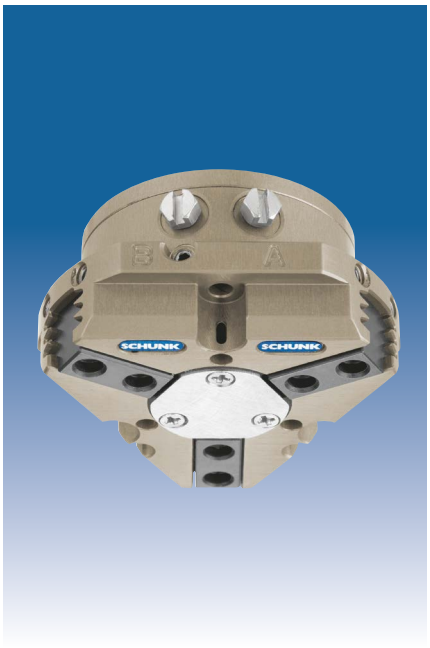

## Gripping force, I.D. gripping

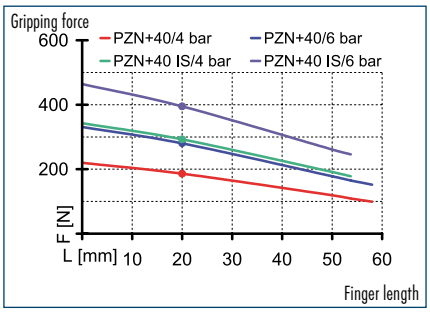


## Gripping force, O.D. gripping

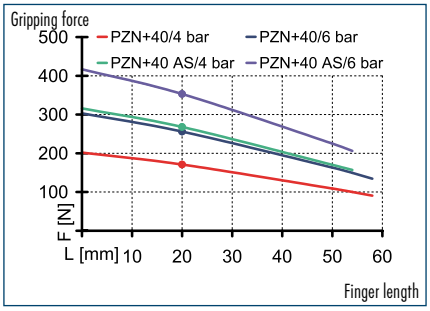


## Finger load

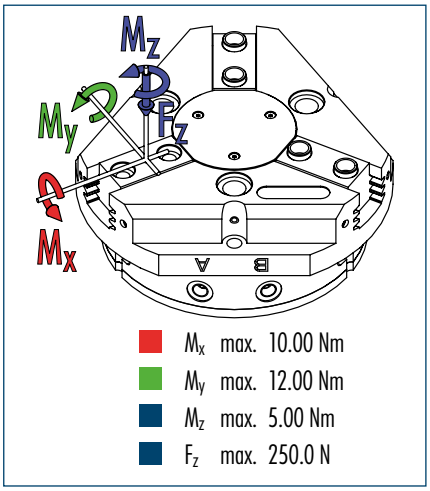


- $M_x$ max. 10.00 Nm
- $M_y$ max. 12.00 Nm
- $M_z$ max. 5.00 Nm
- $F_z$ max. 250.0 N

ⓘ The indicated moments and forces are static values, apply per base jaw and may occur simultaneously. $M_y$ may arise in addition to the moment generated by the gripping force itself. If the max. permitted finger weight is exceeded, it is imperative to throttle the air pressure so that the jaw movement occurs without any hitting or bouncing. Service life may be reduced.

## Technical data

| Description | | PZN-plus 40 | PZN-plus 40-AS | PZN-plus 40-IS |
|---|---|---|---|---|
| **ID** | | **0303308** | **0303508** | **0303538** |
| Stroke per finger | [mm] | 2.5 | 2.5 | 2.5 |
| Closing force | [N] | 255 | 355 | |
| Opening force | [N] | 270 | | 370 |
| Min. spring force | [N] | | 100 | 100 |
| Weight | [kg] | 0.13 | 0.15 | 0.15 |
| Recommended workpiece weight | [kg] | 1.3 | 1.3 | 1.3 |
| Air consumption per double stroke | [cm³] | 5 | 9 | 9 |
| Min./max. operating pressure | [bar] | 2/8 | 4/6.5 | 4/6.5 |
| Nominal operating pressure | [bar] | 6 | 6 | 6 |
| Closing/opening time | [s] | 0.03/0.03 | 0.02/0.04 | 0.04/0.02 |
| Max. permitted finger length | [mm] | 58 | 54 | 54 |
| Max. permitted weight per finger | [kg] | 0.1 | 0.1 | 0.1 |
| IP class | | 40 | 40 | 40 |
| Min./max. ambient temperature | [°C] | -10/90 | -10/90 | -10/90 |
| Repeat accuracy | [mm] | 0.01 | 0.01 | 0.01 |
| Cleanroom class ISO-classification 14644-1 | | 5 | 5 | 5 |
| **OPTIONS and their characteristics** | | | | |
| Dust-protection version | | **37303308** | **37303508** | **37303538** |
| IP class | | 64 | 64 | 64 |
| Weight | [kg] | 0.16 | 0.18 | 0.18 |
| Anti-corrosion version | | **38303308** | **38303508** | **38303538** |
| High-temperature version | | **39303308** | **39303508** | **39303538** |
| Min./max. ambient temperature | [°C] | -10/130 | -10/130 | -10/130 |
| Force intensified version | | **PZN-plus 40-KVZ** | **PZN-plus 40-AS-KVZ** | **PZN-plus 40-IS-KVZ** |
| ID | | **0372199** | **0372219** | **0372239** |
| Closing force | [N] | 410 | 510 | |
| Opening force | [N] | 432 | | 532 |
| Weight | [kg] | 0.19 | 0.21 | 0.21 |
| Maximum pressure | [bar] | 8 | 6 | 6 |
| Max. permitted finger length | [mm] | 50 | 40 | 40 |
| Precision version | | **0303338** | **0303488** | |

## Main view

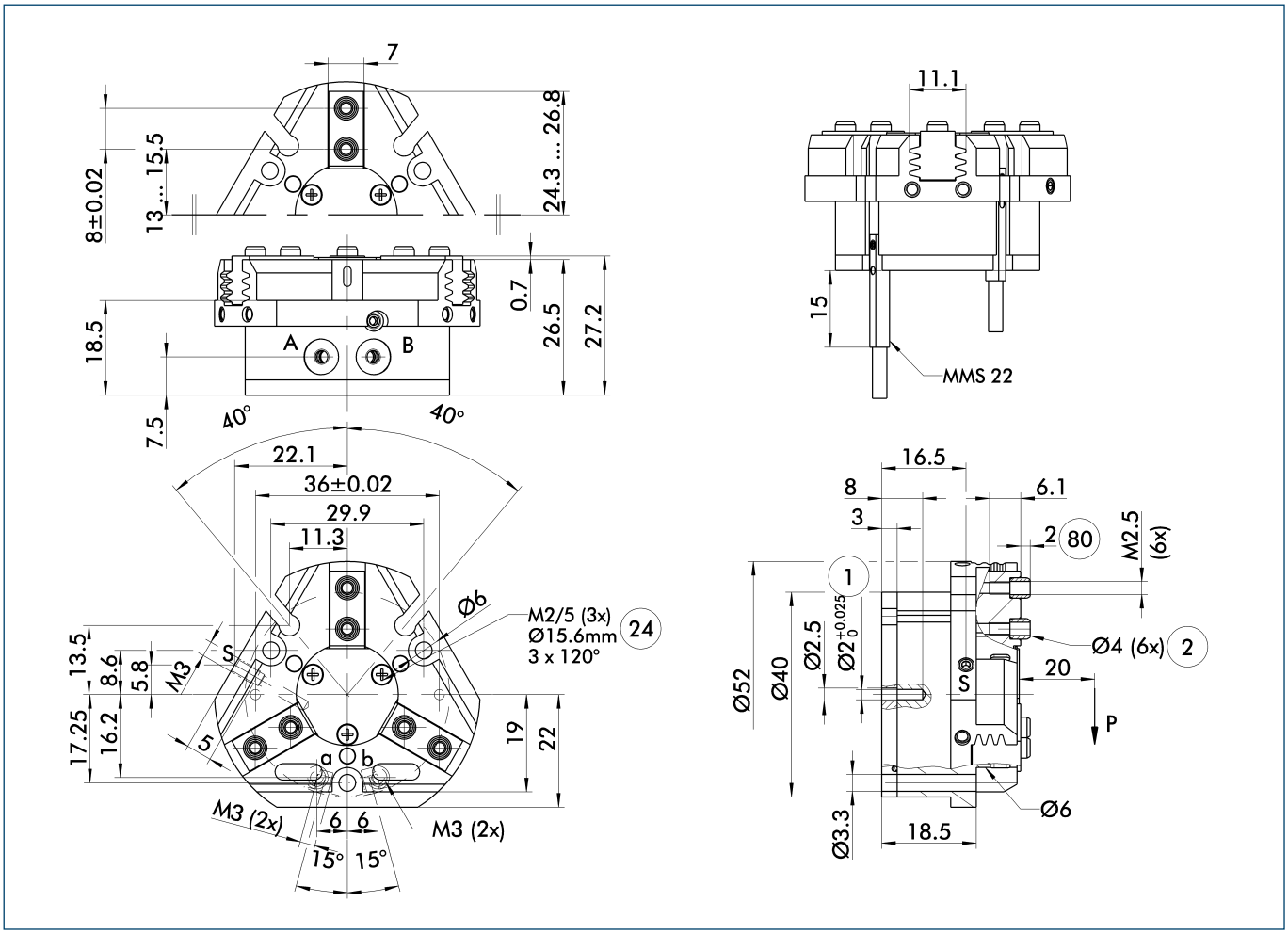


The drawing shows the gripper in the basic version with closed jaws, the dimensions do not include the options described below.

ⓘ The SDV-P pressure maintenance valve can also be used for I.D. or O.D. gripping alternatively or in addition to the spring-loaded, mechanical gripping force maintenance device (see "Accessories" catalog section).

A, a Main/direct connection, gripper opening
B, b Main/direct connection, gripper closing
S Air purge connection
① Gripper connection
② Finger connection
㉔ Bolt circle
㉚ Depth of the centering sleeve hole in the matching part

## Hose-free direct connection

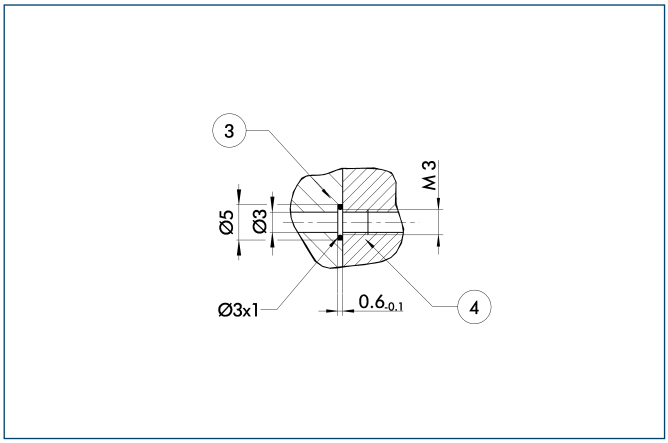


③ Adapter
④ Gripper

The direct connection is used for supplying compressed air without hoses. Instead, the pressure medium is fed through bore-holes in the mounting plate.

## AS/IS gripping force maintenance device

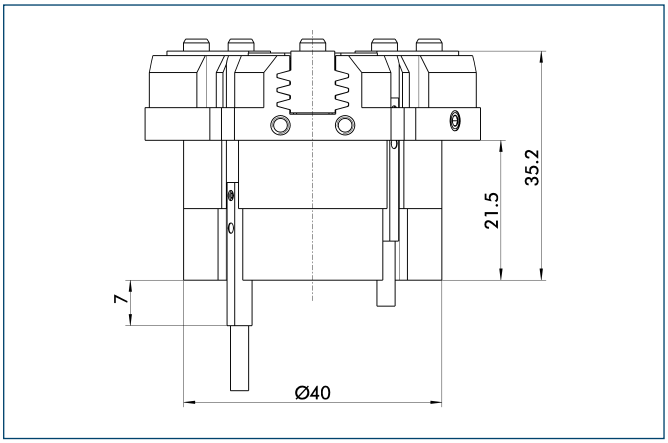


The mechanical gripping force maintenance device ensures a minimum gripping force even in case of pressure drop. This acts as closing force in the AS version, and as opening force in the IS version. In addition, the gripping force maintenance device can also be used for increasing the gripping force or for single-acting gripping.

## Dust-protection version

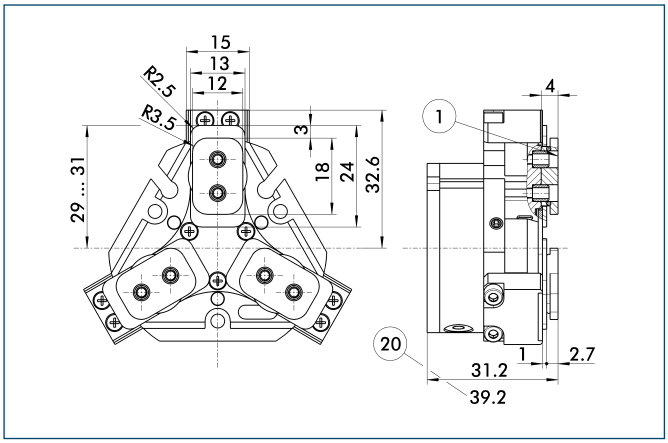


(1) Gripper connection
(20) For AS / IS version

The "dust-protection" option increases the degree of protection against penetrating substances. The screw connection diagram shifts by the height of the intermediate jaw. The finger length is still measured from the upper edge of the gripper housing.

## Force intensified version

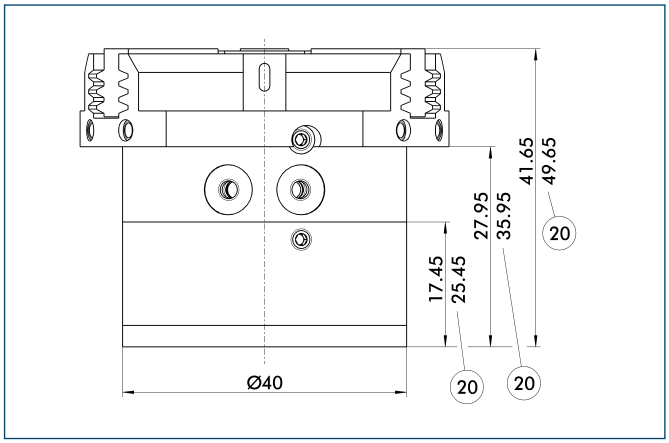


(20) For AS / IS version

The KVZ cylinder increases the gripping forces during opening and closing. A second, in series-connected piston also increases the force on the wedge hook. The full gripping force shown in the data table is sometimes only reached after a few hundred gripping cycles. Please consider that grippers which are equipped with a gripping force maintenance device (AS / IS) are higher.

## Precision version

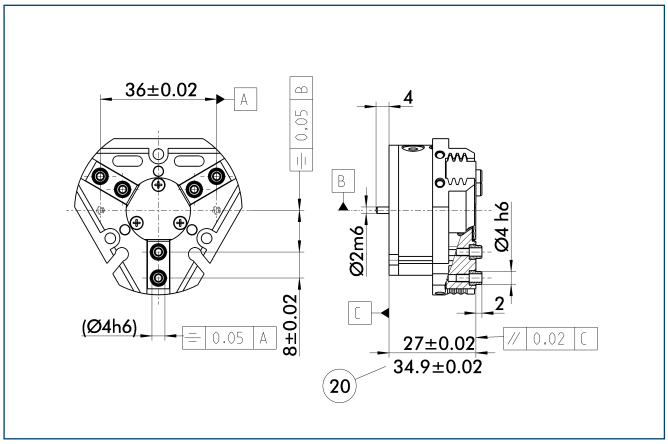


(20) For AS / IS version

The indicated tolerances just refer to the types of precision versions shown in the chart of technical specifications. All other types of precision versions are available on request.

## Modular Assembly Automation

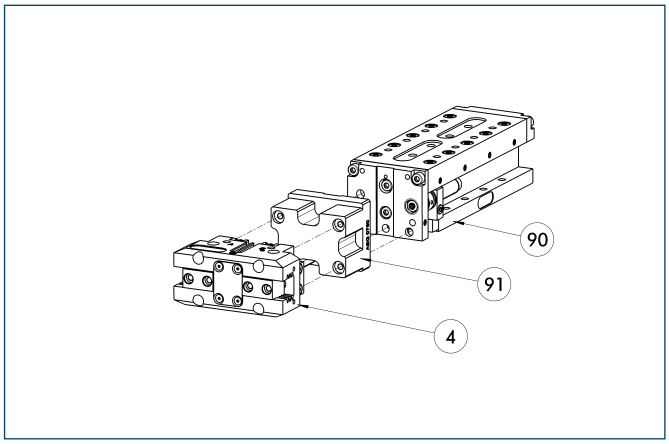


(4) Gripper
(90) CLM
(91) ASG

This gripper can be combined with the standard linear modules LM, KLM, CLM and ELM of the GEMOTEC modular system. For more information see our main catalog "Modular Assembly Automation".

## Spring-loaded pressure piece

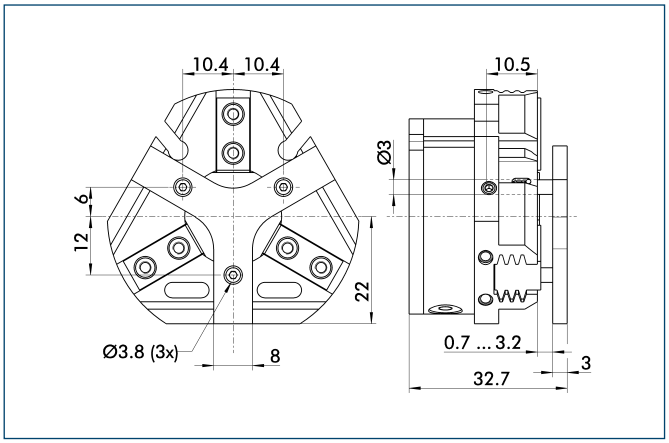


For spring-supported positioning of the workpiece against a stop after the gripper has opened. Especially developed for loading machines.

| Description | ID | Stroke | Min. force |
|---|---|---|---|
| Spring-loaded pressure piece | | | |
| A-PZN-plus 40 | **0303718** | 2.5 mm | 5 N |

## Protection cover

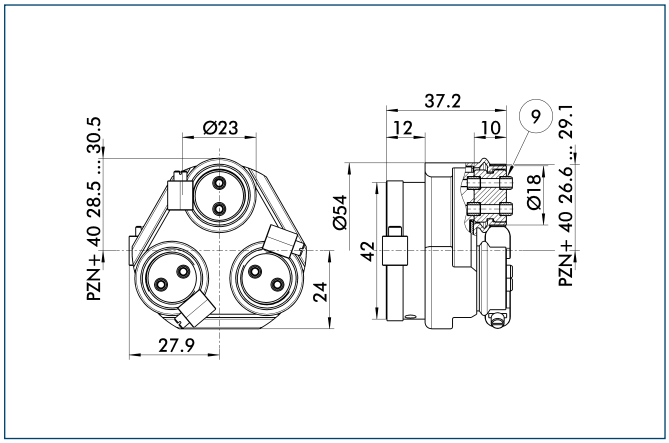


(9) For mounting screw connection diagram, see basic version

The HUE protective cover completely protects the gripper against external influences up to IP65 if an additional sealing of the cover bottom is provided as part of the application. The mounting diagram shifts by the height of the intermediate jaw.

| Description | ID | Cleanroom class ISO-classification 14644-1 |
|---|---|---|
| Protection cover | | |
| HUE PZN-plus 40 | **0303478** | 2 |

## Universal intermediate jaw

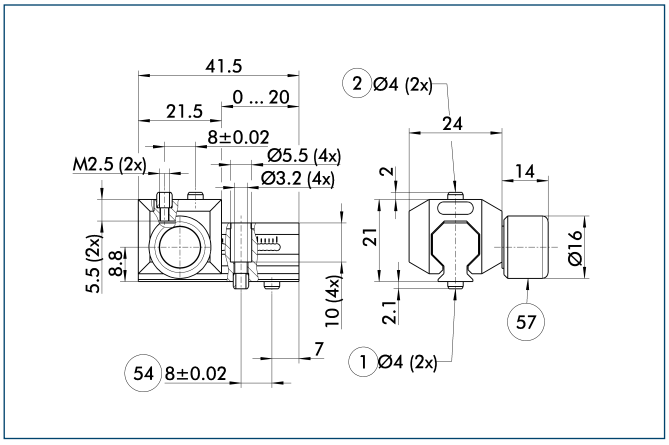


(1) Gripper connection
(2) Finger connection
(54) Optional right or left connection
(57) Locking

The universal intermediate jaw allows fast tool-free and reliable plugging and shifting of top jaws at the gripper.

| Description | ID | Grid dimension |
|---|---|---|
| Universal intermediate jaw | | |
| UZB 40 | **0300040** | 1 mm |

ⓘ The slide UZB-S can be removed completely and has to be ordered separately. Moreover, it allows a fast jaw change.

## Finger blanks

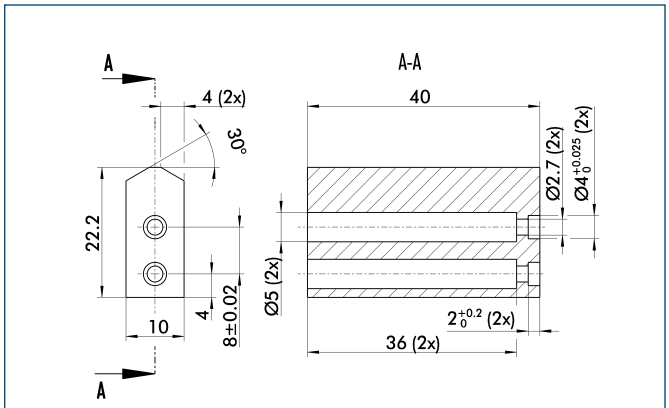


Finger blanks for customized subsequent machining

| Description | ID | Material | Scope of delivery |
|---|---|---|---|
| Finger blanks | | | |
| ABR-plus 40 | **0300008** | Aluminum | 1 |
| SBR-plus 40 | **0300018** | 16 MnCr 5 | 1 |

You can find more detailed information and individual parts of the above-mentioned accessories in the “Accessories” catalog section.

## Compensation unit with spring reset

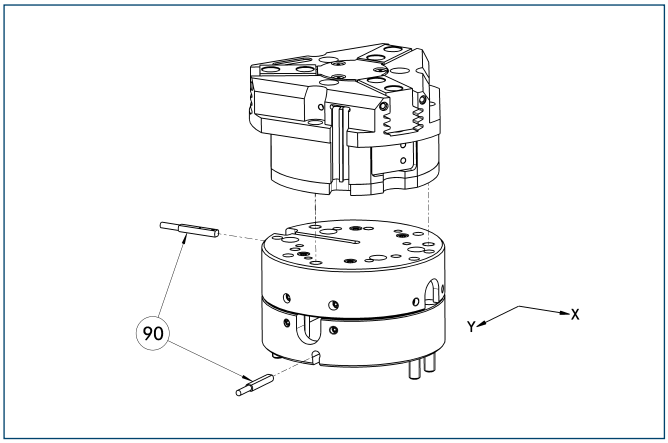


90 Monitoring

Grippers can be directly mounted without using an adapter plate. For details see our catalog “Robot Accessories”.

| Description | ID | Compensation travel | Reset force |
|---|---|---|---|
| Compensation unit | | | |
| AGE-F-XY-031-1 | **0324900** | ±1.5 mm | 1 N |
| AGE-F-XY-031-2 | **0324901** | ±1.5 mm | 2.5 N |
| AGE-F-XY-031-3 | **0324902** | ±1.5 mm | 3.3 kN |

## Programmable magnetic switch

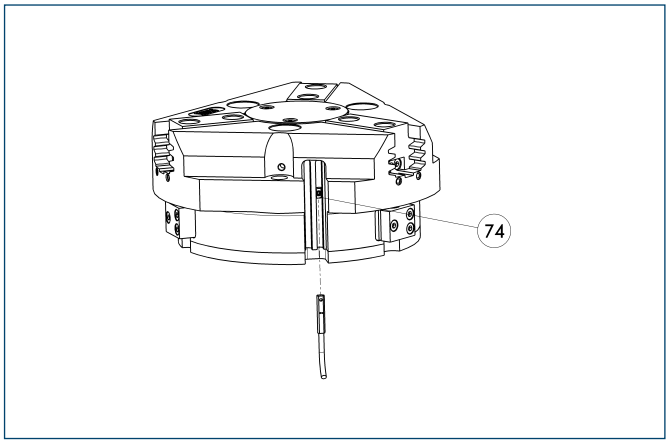


74 Stop for MMS-P

Position monitoring with two programmable positions per sensor. The end position monitoring is mounted in the C-slot.

| Description | ID | Recommended product |
|---|---|---|
| Programmable magnetic switch | | |
| MMS-P 22-S-M8-PNP | **0301370** | • |
| MMSK-P 22-S-PNP | **0301371** | |
| Connection cables | | |
| KA BG08-L 4P-0500 | **0307767** | |
| KA BG08-L 4P-1000 | **0307768** | |
| KA BW08-L 4P-0500 | **0307765** | |
| KA BW08-L 4P-1000 | **0307766** | |
| Sensor Distributor | | |
| V2-M8-4P-2XM8-3P | **0301380** | |

ⓘ Please note the minimum permitted bending radii for the sensor cables, which are generally 35 mm.

ⓘ Per gripper one sensor (closer/NO) is required, optionally a cable extension.

You can find more detailed information and individual parts of the above-mentioned accessories in the “Accessories” catalog section.

## Electronic magnetic switches

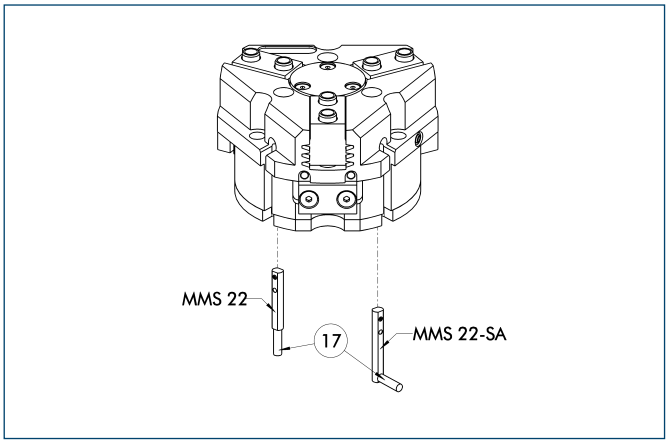


⑰ Cable outlet

End position monitoring for mounting in the C-slot

| Description | ID | Recommended product |
|---|---|---|
| Electronic magnetic switches | | |
| MMS 22-S-M5-PNP | **0301438** | |
| MMS 22-S-M5-NPN | **0301439** | |
| MMS 22-S-M8-PNP | **0301432** | • |
| MMS 22-S-M8-NPN | **0301433** | |
| MMSK 22-S-PNP | **0301434** | |
| MMSK 22-S-NPN | **0301435** | |
| Electronic magnetic switches with lateral cable outlet | | |
| MMS 22-S-M5-PNP-SA | **0301448** | |
| MMS 22-S-M5-NPN-SA | **0301449** | |
| MMS 22-S-M8-PNP-SA | **0301442** | • |
| MMS 22-S-M8-NPN-SA | **0301443** | |
| MMSK 22-S-PNP-SA | **0301444** | |
| MMSK 22-S-NPN-SA | **0301445** | |
| Connection cables | | |
| KA BG05-L 3P-0300 | **0301652** | |
| KA BG08-L 3P-0300-PNP | **0301622** | |
| KA BG08-L 3P-0500-PNP | **0301623** | |
| KA BW05-L 3P-0300 | **0301650** | |
| KA BW08-L 3P-0300-NPN | **0301602** | |
| KA BW08-L 3P-0300-PNP | **0301594** | |
| KA BW08-L 3P-0500-NPN | **9641116** | |
| KA BW08-L 3P-0500-PNP | **0301502** | |
| Cable extensions | | |
| KV BW08-SG08 3P-0030-PNP | **0301495** | |
| KV BW08-SG08 3P-0100-PNP | **0301496** | |
| KV BW08-SG08 3P-0200-PNP | **0301497** | |

ⓘ Two sensors (closer/NO) are required for each gripper, plus extension cables as an option.

ⓘ Please note the minimum permitted bending radii for the sensor cables, which are generally 35 mm.

You can find more detailed information and individual parts of the above-mentioned accessories in the “Accessories” catalog section.

# PZN-plus 50

**Pneumatic • 3-Finger Centric Gripper • Universal Gripper**

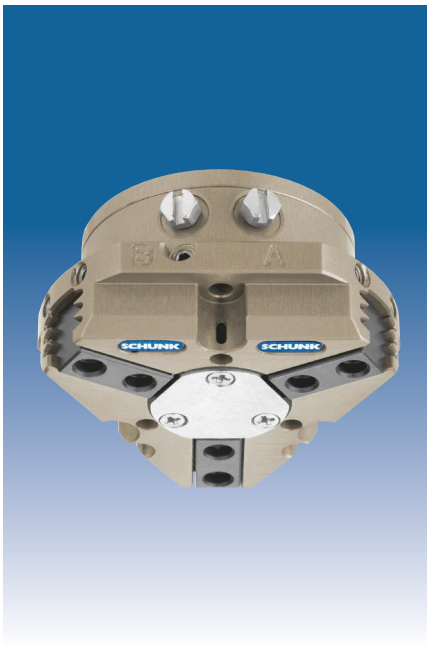

## Gripping force, I.D. gripping

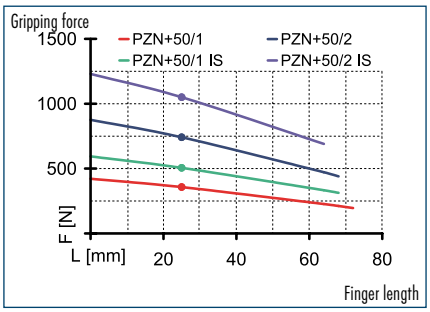


## Gripping force, O.D. gripping

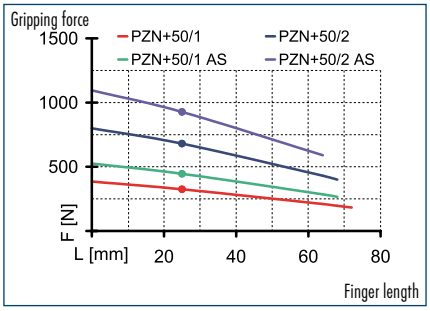


## Finger load

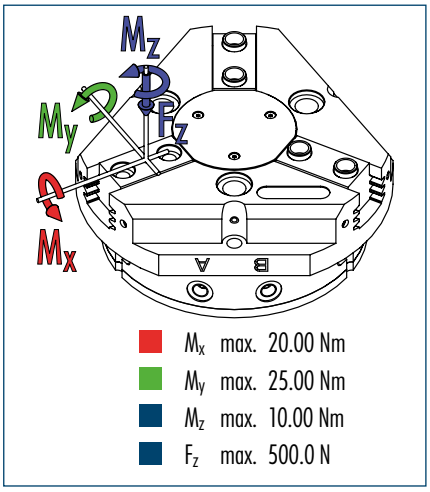


$M_x$ max. 20.00 Nm
$M_y$ max. 25.00 Nm
$M_z$ max. 10.00 Nm
$F_z$ max. 500.0 N

ⓘ The indicated moments and forces are static values, apply per base jaw and may occur simultaneously. $M_y$ may arise in addition to the moment generated by the gripping force itself. If the max. permitted finger weight is exceeded, it is imperative to throttle the air pressure so that the jaw movement occurs without any hitting or bouncing. Service life may be reduced.

## Technical data

| Description | | PZN-plus 50-1 | PZN-plus 50-2 | PZN-plus 50-1-AS | PZN-plus 50-2-AS | PZN-plus 50-1-IS | PZN-plus 50-2-IS |
|---|---|---|---|---|---|---|---|
| **ID** | | **0303309** | **0303409** | **0303509** | **0303609** | **0303539** | **0303639** |
| Stroke per finger | [mm] | 4 | 2 | 4 | 2 | 4 | 2 |
| Closing force | [N] | 325 | 680 | 445 | 925 | | |
| Opening force | [N] | 355 | 740 | | | 505 | 1050 |
| Min. spring force | [N] | | | 120 | 245 | 150 | 310 |
| Weight | [kg] | 0.27 | 0.27 | 0.35 | 0.35 | 0.35 | 0.35 |
| Recommended workpiece weight | [kg] | 1.65 | 3.4 | 1.65 | 3.4 | 1.65 | 3.4 |
| Air consumption per double stroke | [cm³] | 9 | 9 | 18 | 18 | 18 | 18 |
| Min./max. operating pressure | [bar] | 2/8 | 2/8 | 4/6.5 | 4/6.5 | 4/6.5 | 4/6.5 |
| Nominal operating pressure | [bar] | 6 | 6 | 6 | 6 | 6 | 6 |
| Closing/opening time | [s] | 0.03/0.03 | 0.03/0.03 | 0.02/0.04 | 0.02/0.04 | 0.04/0.02 | 0.04/0.02 |
| Max. permitted finger length | [mm] | 72 | 68 | 68 | 68 | 64 | 64 |
| Max. permitted weight per finger | [kg] | 0.18 | 0.18 | 0.18 | 0.18 | 0.18 | 0.18 |
| IP class | | 40 | 40 | 40 | 40 | 40 | 40 |
| Min./max. ambient temperature | [°C] | -10/90 | -10/90 | -10/90 | -10/90 | -10/90 | -10/90 |
| Repeat accuracy | [mm] | 0.01 | 0.01 | 0.01 | 0.01 | 0.01 | 0.01 |
| Cleanroom class ISO-classification 14644-1 | | 5 | 5 | 5 | 5 | 5 | 5 |
| **OPTIONS and their characteristics** | | | | | | | |
| Dust-protection version | | **37303309** | **37303409** | **37303509** | **37303609** | **37303539** | **37303639** |
| IP class | | 64 | 64 | 64 | 64 | 64 | 64 |
| Weight | [kg] | 0.33 | 0.33 | 0.41 | 0.41 | 0.41 | 0.41 |
| Anti-corrosion version | | **38303309** | **38303409** | **38303509** | **38303609** | **38303539** | **38303639** |
| High-temperature version | | **39303309** | **39303409** | **39303509** | **39303609** | **39303539** | **39303639** |
| Min./max. ambient temperature | [°C] | -10/130 | -10/130 | -10/130 | -10/130 | -10/130 | -10/130 |
| Force intensified version | | PZN-plus 50-1-KVZ | PZN-plus 50-2-KVZ | PZN-plus 50-1-AS-KVZ | | PZN-plus 50-1-IS-KVZ | |
| ID | | **0372200** | **0372210** | **0372220** | | **0372240** | |
| Closing force | [N] | 520 | 1090 | 640 | | | |
| Opening force | [N] | 570 | 1185 | | | 720 | |
| Weight | [kg] | 0.38 | 0.38 | 0.46 | | 0.46 | |
| Maximum pressure | [bar] | 8 | 8 | 6 | | 6 | |
| Max. permitted finger length | [mm] | 64 | 50 | 50 | | 50 | |
| Precision version | | **0303339** | **0303439** | **0303489** | **0303589** | | |

## Main view

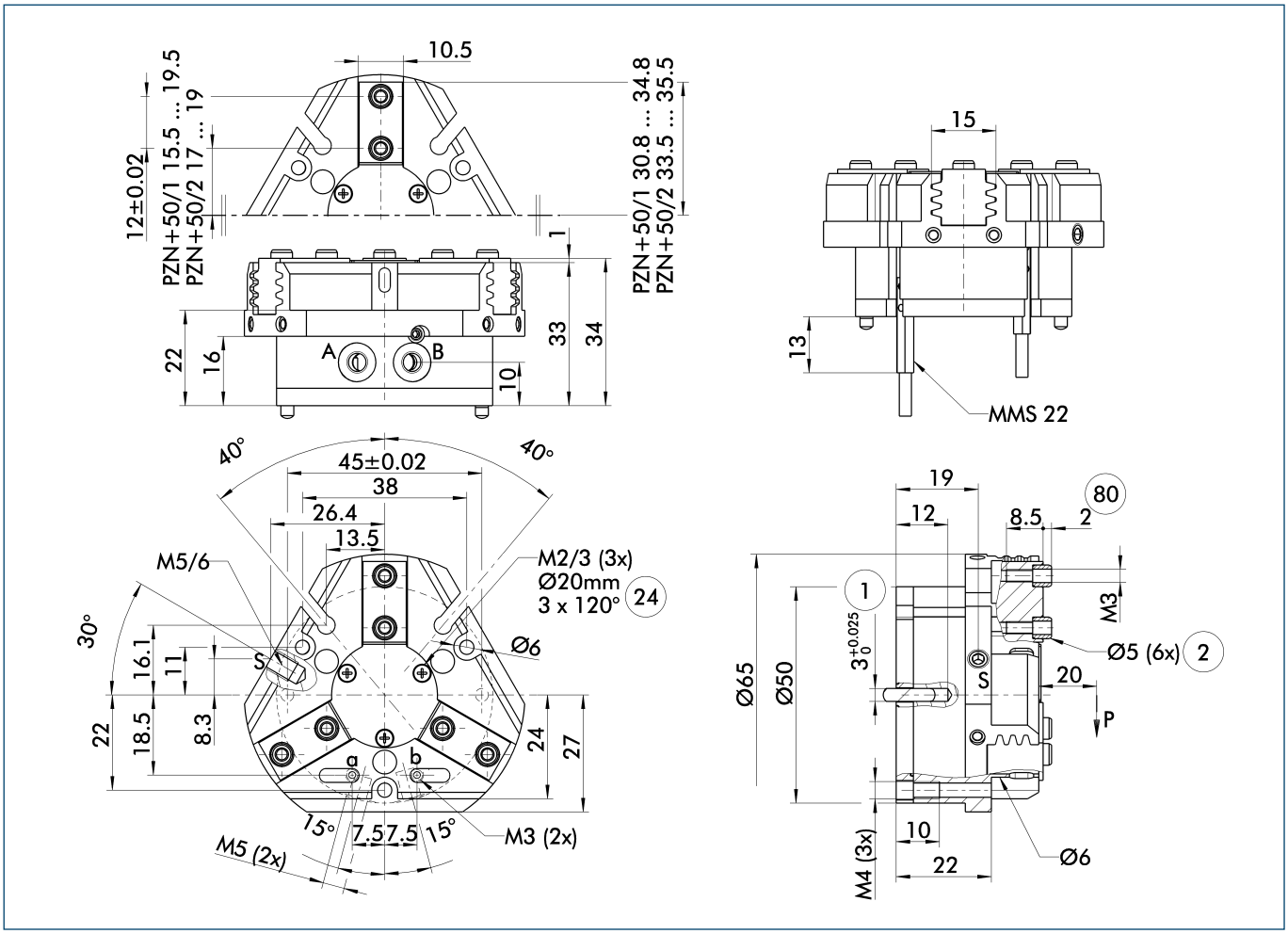


The drawing shows the gripper in the basic version with closed jaws, the dimensions do not include the options described below.

ⓘ The SDV-P pressure maintenance valve can also be used for I.D. or O.D. gripping alternatively or in addition to the spring-loaded, mechanical gripping force maintenance device (see "Accessories" catalog section).

A, a Main/direct connection, gripper opening
B, b Main/direct connection, gripper closing
S Air purge connection
① Gripper connection
② Finger connection
㉔ Bolt circle
㉚ Depth of the centering sleeve hole in the matching part

## Hose-free direct connection

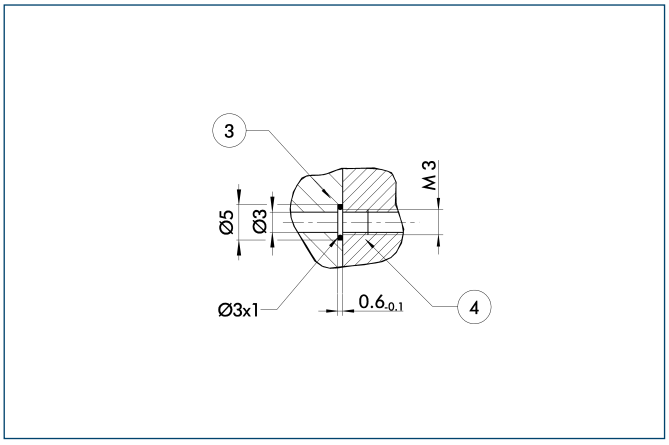


③ Adapter
④ Gripper

The direct connection is used for supplying compressed air without hoses. Instead, the pressure medium is fed through bore-holes in the mounting plate.

## AS/IS gripping force maintenance device

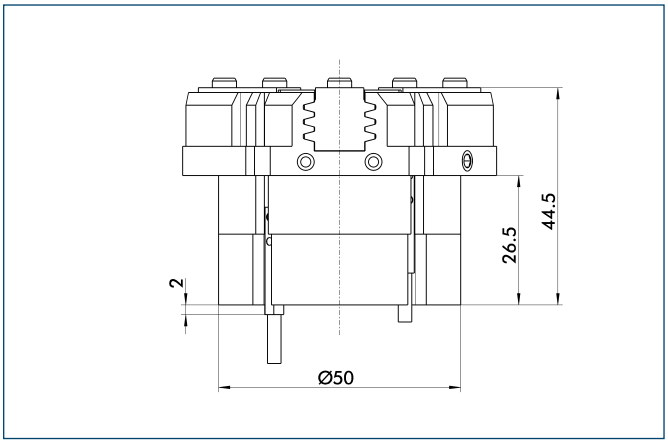


The mechanical gripping force maintenance device ensures a minimum gripping force even in case of pressure drop. This acts as closing force in the AS version, and as opening force in the IS version. In addition, the gripping force maintenance device can also be used for increasing the gripping force or for single-acting gripping.

## Dust-protection version

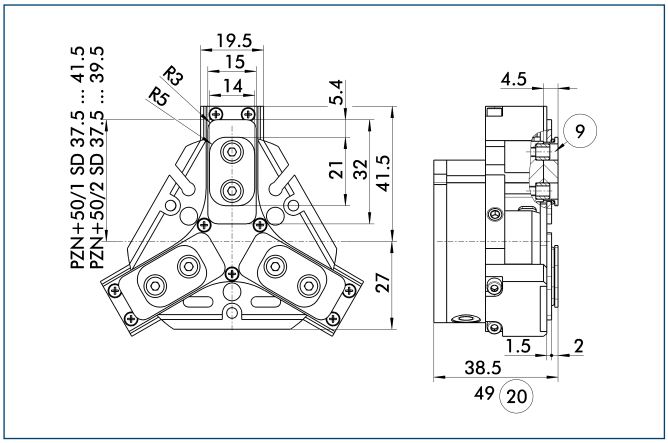


(9) For mounting screw connection diagram, see basic version (20) For AS / IS version

The "dust-protection" option increases the degree of protection against penetrating substances. The screw connection diagram shifts by the height of the intermediate jaw. The finger length is still measured from the upper edge of the gripper housing.

## Force intensified version

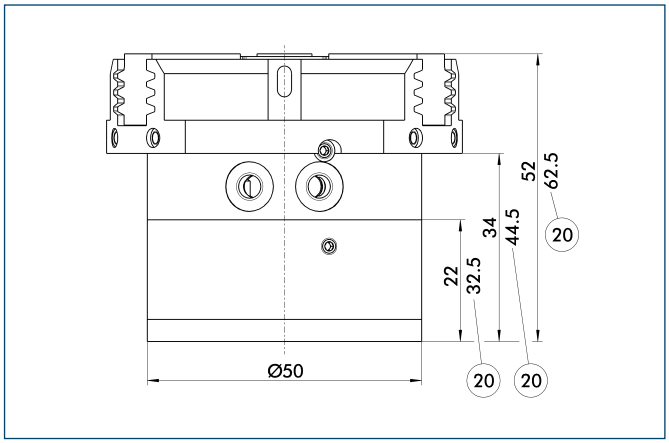


(20) For AS / IS version

The KVZ cylinder increases the gripping forces during opening and closing. A second, in series-connected piston also increases the force on the wedge hook. The full gripping force shown in the data table is sometimes only reached after a few hundred gripping cycles. Please consider that grippers which are equipped with a gripping force maintenance device (AS / IS) are higher.

## Precision version

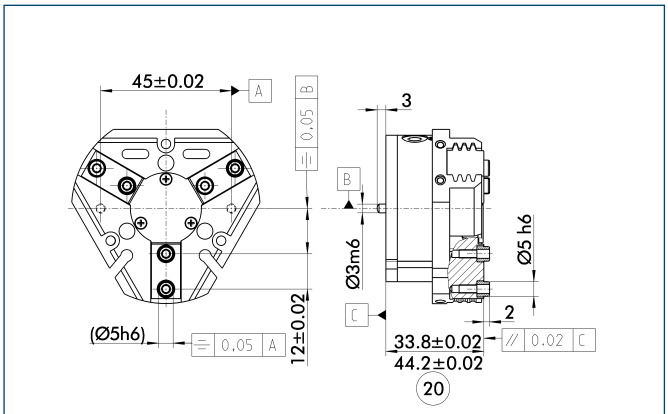


(20) For AS / IS version

The indicated tolerances just refer to the types of precision versions shown in the chart of technical specifications. All other types of precision versions are available on request.

## Modular Assembly Automation

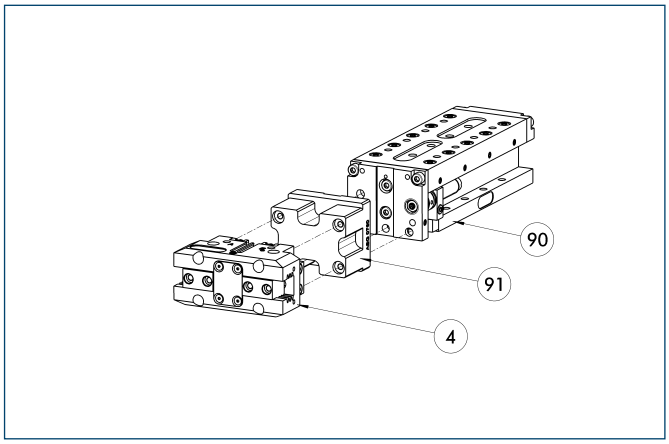


(4) Gripper
(90) CLM
(91) ASG

This gripper can be combined with the standard linear modules LM, KLM, CLM and ELM of the GEMOTEC modular system. For more information see our main catalog "Modular Assembly Automation".

## Spring-loaded pressure piece

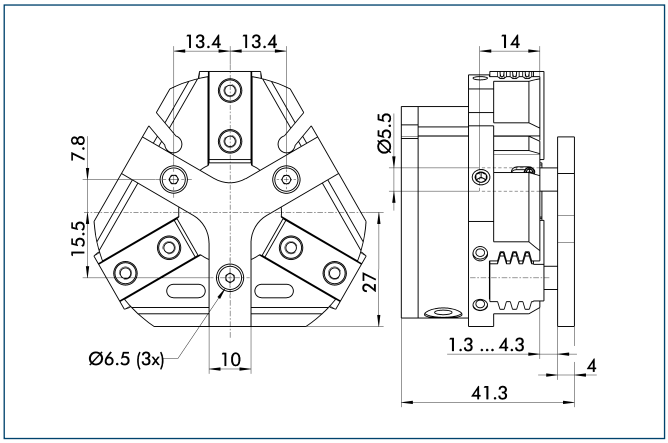


For spring-supported positioning of the workpiece against a stop after the gripper has opened. Especially developed for loading machines.

| Description | ID | Stroke | Min. force |
|---|---|---|---|
| Spring-loaded pressure piece | | | |
| A-PZN-plus 50 | **0303719** | 3 mm | 12 N |

ⓘ The pressure piece cannot be combined with the dust-protection version. Please contact us if you require a special pressure piece.

## Protection cover

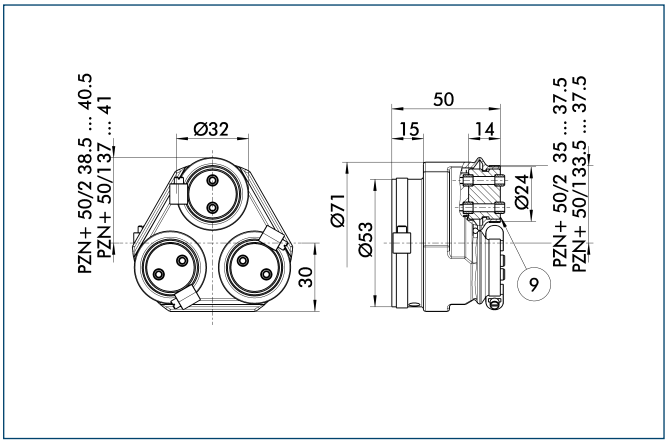


⑨ For mounting screw connection diagram, see basic version

The HUE protective cover completely protects the gripper against external influences up to IP65 if an additional sealing of the cover bottom is provided as part of the application. The mounting diagram shifts by the height of the intermediate jaw.

| Description | ID | Cleanroom class ISO-classification 14644-1 |
|---|---|---|
| Protection cover | | |
| HUE PZN-plus 50 | **0303479** | 2 |

## Quick-change Jaw System

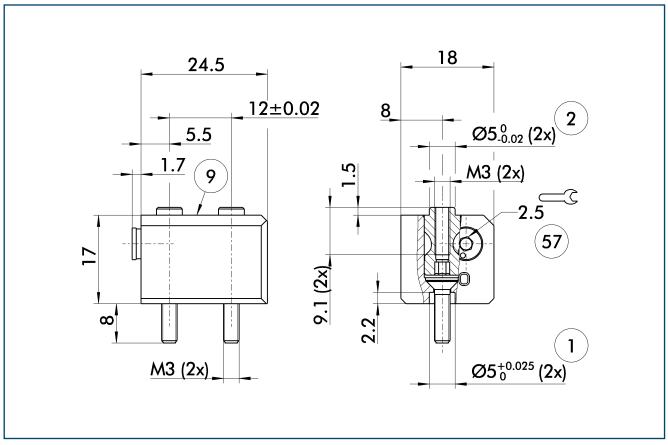


① Gripper connection
② Finger connection
⑨ For mounting screw connection diagram, see basic version
57 Locking

The BSWS quick-change jaw system enables top jaws to be changed on the gripper manually and rapidly. An adapter (BSWS-A) and a base (BSWS-B) are required for each gripper jaw.
For a reverse assembly without height set-up, one adapter (BSWS-A) and a kit (BSWS-U) per gripper jaw are required. Another effect of the BSWS-U is, that there are no disturbing fastening bores in the finger contour.

| Description | ID |
|---|---|
| Quick-change Jaw System adapter | |
| BSWS-A 50 | **0303020** |
| Quick-change Jaw System base | |
| BSWS-B 50 | **0303021** |
| Quick-change Jaw System reversed | |
| BSWS-U 50 | **0303040** |

## Universal intermediate jaw

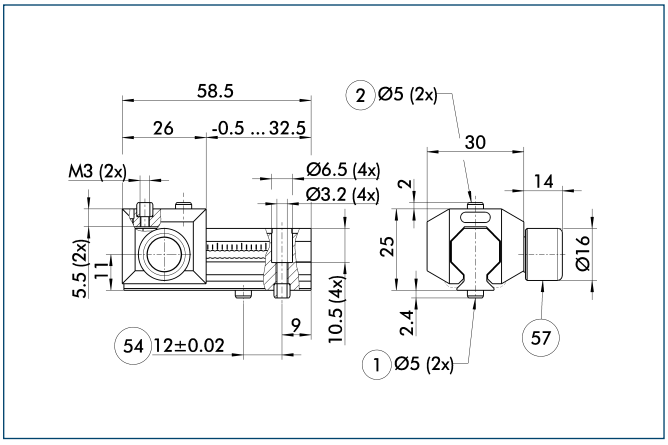


① Gripper connection
② Finger connection
54 Optional right or left connection
57 Locking

The universal intermediate jaw allows fast tool-free and reliable plugging and shifting of top jaws at the gripper.

| Description | ID | Grid dimension |
|---|---|---|
| Universal intermediate jaw | | |
| UZB 50 | **0300041** | 1.5 mm |

ⓘ The slide UZB-S can be removed completely and has to be ordered separately. Moreover, it allows a fast jaw change.

You can find more detailed information and individual parts of the above-mentioned accessories in the “Accessories” catalog section.

## Force measuring jaws

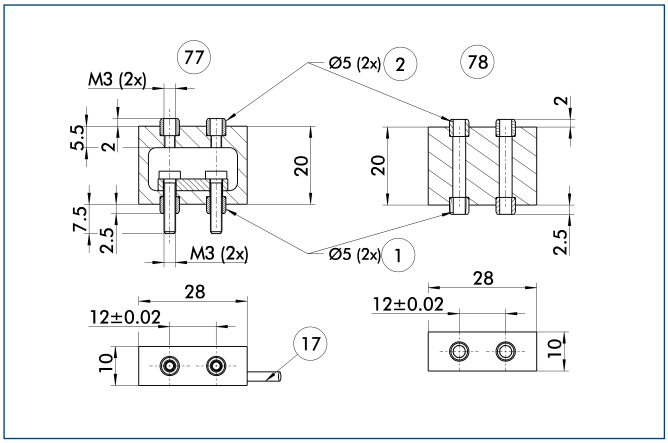


① Gripper connection
② Finger connection
⑰ Cable outlet
⑦⑦ Active intermediate jaws
⑦⑧ Passive intermediate jaws

Force measuring jaws measure gripping forces, but can also determine workpiece weights or dimensional deviations. There are active and passive intermediate jaws (FMS-ZBA or FMS-ZBP). At least one active force measuring jaw is required per gripper, the rest can be passive. For each active jaw, a FMS-A1 control unit and a FMS-A connection cable are required.

| Description | ID |
|---|---|
| Active intermediate jaws | |
| FMS-ZBA 50 | **0301830** |
| Passive intermediate jaws | |
| FMS-ZBP 50 | **0301831** |
| Electronic Processor | |
| FMS-A1 | **0301810** |
| Connection cables | |
| FMS-AK0200 | **0301820** |
| FMS-AK0500 | **0301821** |
| FMS-AK1000 | **0301822** |
| FMS-AK2000 | **0301823** |

## Finger blanks

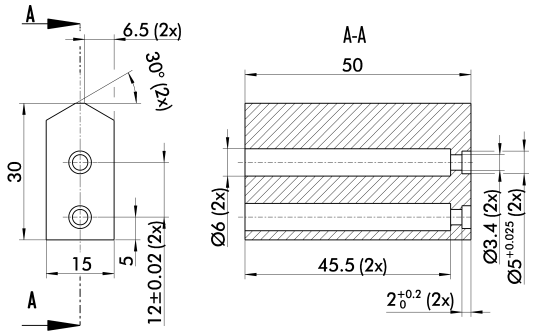


Finger blanks for customized subsequent machining

| Description | ID | Material | Scope of delivery |
|---|---|---|---|
| Finger blanks | | | |
| ABR-plus 50 | **0300009** | Aluminum | 1 |
| SBR-plus 50 | **0300019** | 16 MnCr 5 | 1 |

You can find more detailed information and individual parts of the above-mentioned accessories in the “Accessories” catalog section.

## Tolerance compensation unit

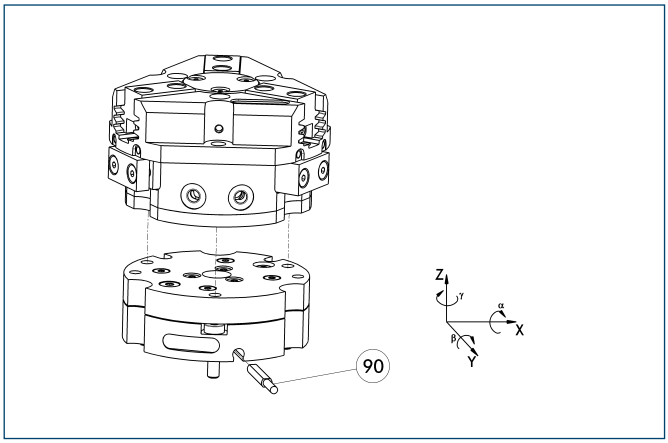


(90) Monitoring of locking

Grippers can be directly mounted without an adapter plate. Tolerance compensation unit and gripper have an identical screw connection diagram. Therefore the tolerance compensation units can be assembled later. Please consider the additional assembly height of the tolerance compensation unit. For details see catalog “Robot Accessories”.

| Description | ID | Locking | Deflection |
|---|---|---|---|
| Compensation unit | | | |
| TCU-050-3-OV-Z | **0324749** | No | |

## Compensation unit with spring reset

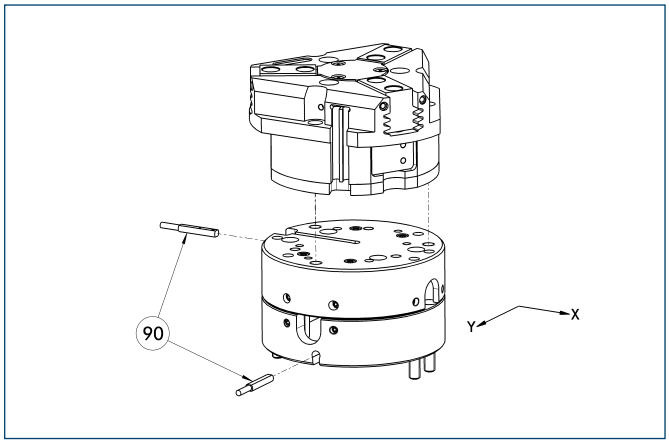


(90) Monitoring

Grippers can be directly mounted without using an adapter plate. For details see our catalog “Robot Accessories”.

| Description | ID | Compensation travel | Reset force |
|---|---|---|---|
| Compensation unit | | | |
| AGE-F-XY-040-1 | **0324920** | ±2 mm | 1 N |
| AGE-F-XY-040-2 | **0324921** | ±2 mm | 2.5 N |
| AGE-F-XY-040-3 | **0324922** | ±2 mm | 3.3 N |

## Programmable magnetic switch

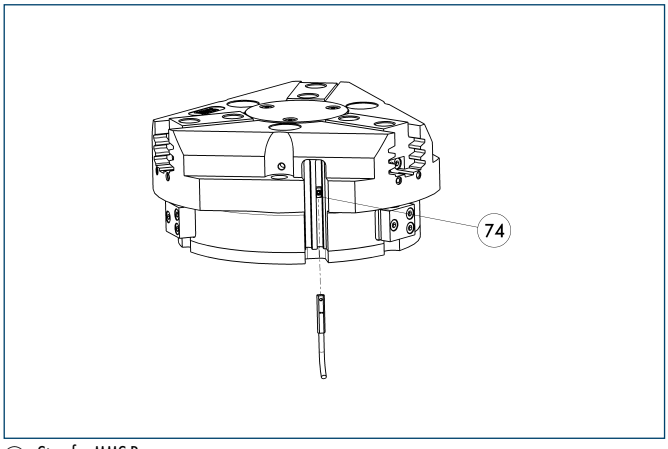


(74) Stop for MMS-P

Position monitoring with two programmable positions per sensor. The end position monitoring is mounted in the C-slot.

| Description | ID | Recommended product |
|---|---|---|
| Programmable magnetic switch | | |
| MMS-P 22-S-M8-PNP | **0301370** | • |
| MMSK-P 22-S-PNP | **0301371** | |
| Connection cables | | |
| KA BG08-L 4P-0500 | **0307767** | |
| KA BG08-L 4P-1000 | **0307768** | |
| KA BW08-L 4P-0500 | **0307765** | |
| KA BW08-L 4P-1000 | **0307766** | |
| Sensor Distributor | | |
| V2-M8-4P-2XM8-3P | **0301380** | |

ⓘ Please note the minimum permitted bending radii for the sensor cables, which are generally 35 mm.
ⓘ Per gripper one sensor (closer/NO) is required, optionally a cable extension.

## Electronic magnetic switches

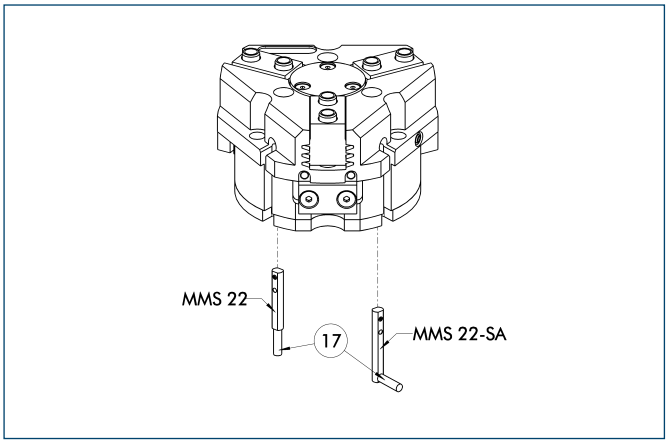


⑰ Cable outlet

End position monitoring for mounting in the C-slot

| Description | ID | Recommended product |
|---|---|---|
| Electronic magnetic switches | | |
| MMS 22-S-M5-PNP | 0301438 | |
| MMS 22-S-M5-NPN | 0301439 | |
| MMS 22-S-M8-PNP | 0301432 | • |
| MMS 22-S-M8-NPN | 0301433 | |
| MMSK 22-S-PNP | 0301434 | |
| MMSK 22-S-NPN | 0301435 | |
| Electronic magnetic switches with lateral cable outlet | | |
| MMS 22-S-M5-PNP-SA | 0301448 | |
| MMS 22-S-M5-NPN-SA | 0301449 | |
| MMS 22-S-M8-PNP-SA | 0301442 | • |
| MMS 22-S-M8-NPN-SA | 0301443 | |
| MMSK 22-S-PNP-SA | 0301444 | |
| MMSK 22-S-NPN-SA | 0301445 | |
| Connection cables | | |
| KA BG05-L 3P-0300 | 0301652 | |
| KA BG08-L 3P-0300-PNP | 0301622 | |
| KA BG08-L 3P-0500-PNP | 0301623 | |
| KA BW05-L 3P-0300 | 0301650 | |
| KA BW08-L 3P-0300-NPN | 0301602 | |
| KA BW08-L 3P-0300-PNP | 0301594 | |
| KA BW08-L 3P-0500-NPN | 9641116 | |
| KA BW08-L 3P-0500-PNP | 0301502 | |
| Cable extensions | | |
| KV BW08-SG08 3P-0030-PNP | 0301495 | |
| KV BW08-SG08 3P-0100-PNP | 0301496 | |
| KV BW08-SG08 3P-0200-PNP | 0301497 | |

ⓘ Two sensors (closer/NO) are required for each gripper, plus extension cables as an option.

ⓘ Please note the minimum permitted bending radii for the sensor cables, which are generally 35 mm.

You can find more detailed information and individual parts of the above-mentioned accessories in the “Accessories” catalog section.

# PZN-plus 64

**Pneumatic • 3-Finger Centric Gripper • Universal Gripper**

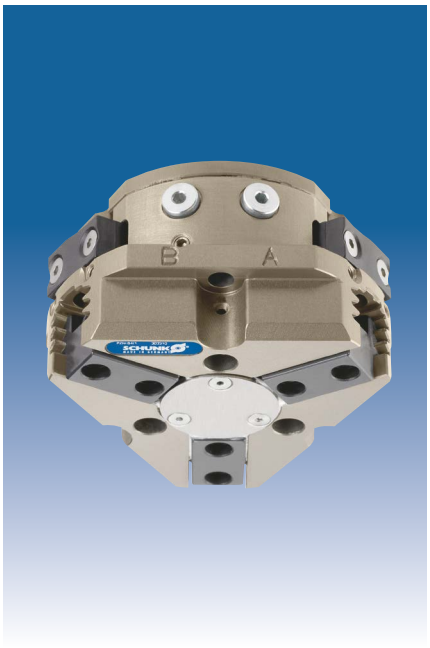

## Gripping force, I.D. gripping

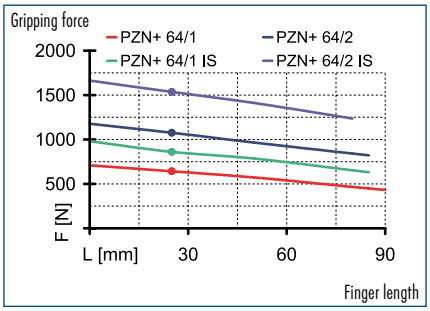


## Gripping force, O.D. gripping

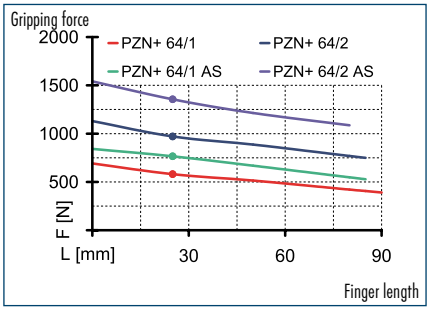


## Finger load

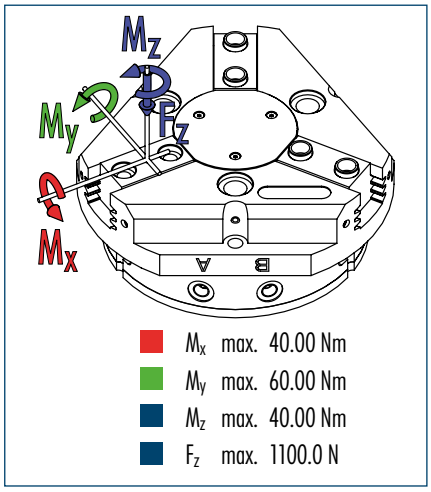


ⓘ The indicated moments and forces are static values, apply per base jaw and may occur simultaneously. $M_y$ may arise in addition to the moment generated by the gripping force itself. If the max. permitted finger weight is exceeded, it is imperative to throttle the air pressure so that the jaw movement occurs without any hitting or bouncing. Service life may be reduced.

## Technical data

| Description | | PZN-plus 64-1 | PZN-plus 64-2 | PZN-plus 64-1-AS | PZN-plus 64-2-AS | PZN-plus 64-1-IS | PZN-plus 64-2-IS |
|---|---|---|---|---|---|---|---|
| **ID** | | **0303310** | **0303410** | **0303510** | **0303610** | **0303540** | **0303640** |
| Stroke per finger | [mm] | 6 | 3 | 6 | 3 | 6 | 3 |
| Closing force | [N] | 580 | 970 | 765 | 1285 | | |
| Opening force | [N] | 640 | 1075 | | | 860 | 1535 |
| Min. spring force | [N] | | | 185 | 315 | 220 | 460 |
| Weight | [kg] | 0.43 | 0.43 | 0.54 | 0.54 | 0.54 | 0.54 |
| Recommended workpiece weight | [kg] | 2.9 | 4.85 | 2.9 | 4.85 | 2.9 | 4.85 |
| Air consumption per double stroke | [cm³] | 25 | 25 | 48 | 48 | 48 | 25 |
| Min./max. operating pressure | [bar] | 2/8 | 2/8 | 4/6.5 | 4/6.5 | 4/6.5 | 4/6.5 |
| Nominal operating pressure | [bar] | 6 | 6 | 6 | 6 | 6 | 6 |
| Closing/opening time | [s] | 0.03/0.03 | 0.03/0.03 | 0.02/0.04 | 0.02/0.04 | 0.04/0.02 | 0.04/0.02 |
| Max. permitted finger length | [mm] | 90 | 85 | 85 | 80 | 85 | 80 |
| Max. permitted weight per finger | [kg] | 0.35 | 0.35 | 0.35 | 0.35 | 0.35 | 0.35 |
| IP class | | 40 | 40 | 40 | 40 | 40 | 40 |
| Min./max. ambient temperature | [°C] | -10/90 | -10/90 | -10/90 | -10/90 | -10/90 | -10/90 |
| Repeat accuracy | [mm] | 0.01 | 0.01 | 0.01 | 0.01 | 0.01 | 0.01 |
| Cleanroom class ISO-classification 14644-1 | | 5 | 5 | 5 | 5 | 5 | 5 |
| **OPTIONS and their characteristics** | | | | | | | |
| Dust-protection version | | **37303310** | **37303410** | **37303510** | **37303610** | **37303540** | **37303640** |
| IP class | | 64 | 64 | 64 | 64 | 64 | 64 |
| Weight | [kg] | 0.6 | 0.6 | 0.71 | 0.71 | 0.71 | 0.71 |
| Anti-corrosion version | | **38303310** | **38303410** | **38303510** | **38303610** | **38303540** | **38303640** |
| High-temperature version | | **39303310** | **39303410** | **39303510** | **39303610** | **39303540** | **39303640** |
| Min./max. ambient temperature | [°C] | -10/130 | -10/130 | -10/130 | -10/130 | -10/130 | -10/130 |
| Force intensified version | | **PZN-plus 64-1-KVZ** | **PZN-plus 64-2-KVZ** | **PZN-plus 64-1-AS-KVZ** | | **PZN-plus 64-1-IS-KVZ** | |
| ID | | **0372201** | **0372211** | **0372221** | | **0372241** | |
| Closing force | [N] | 1045 | 1745 | 1230 | | | |
| Opening force | [N] | 1150 | 1935 | | | 1370 | |
| Weight | [kg] | 0.7 | 0.7 | 0.8 | | 0.8 | |
| Maximum pressure | [bar] | 8 | 8 | 6 | | 6 | |
| Max. permitted finger length | [mm] | 80 | 64 | 64 | | 64 | |
| Precision version | | **0303340** | **0303440** | **0303490** | **0303590** | | |

## Main view

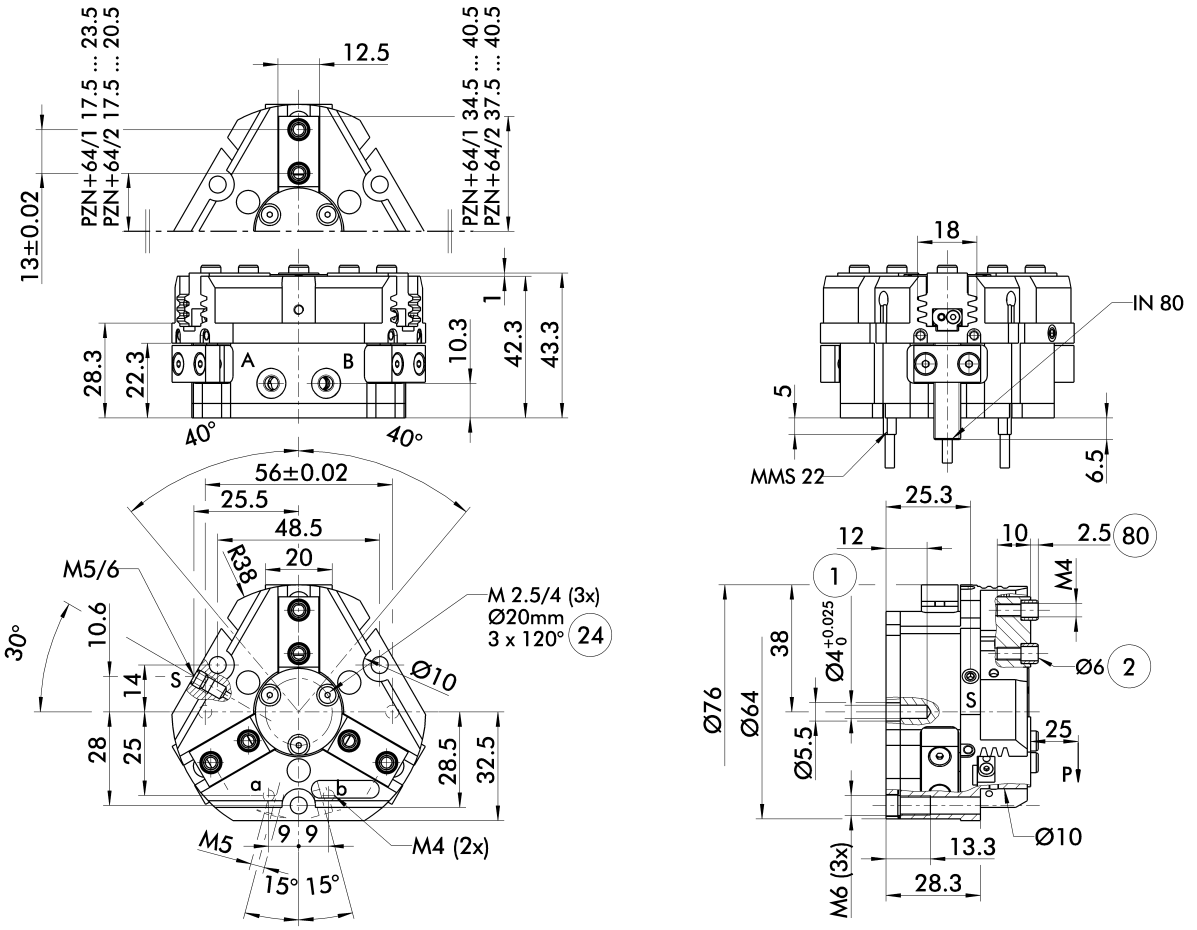


The drawing shows the gripper in the basic version with closed jaws, the dimensions do not include the options described below.

ⓘ The SDV-P pressure maintenance valve can also be used for I.D. or O.D. gripping alternatively or in addition to the spring-loaded, mechanical gripping force maintenance device (see "Accessories" catalog section).

A, a Main/direct connection, gripper opening
B, b Main/direct connection, gripper closing
S Air purge connection
① Gripper connection
② Finger connection
㉔ Bolt circle
㊽ Depth of the centering sleeve hole in the matching part

## Hose-free direct connection

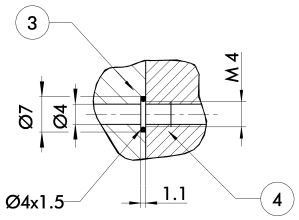


③ Adapter
④ Gripper

The direct connection is used for supplying compressed air without hoses. Instead, the pressure medium is fed through bore-holes in the mounting plate.

## AS/IS gripping force maintenance device

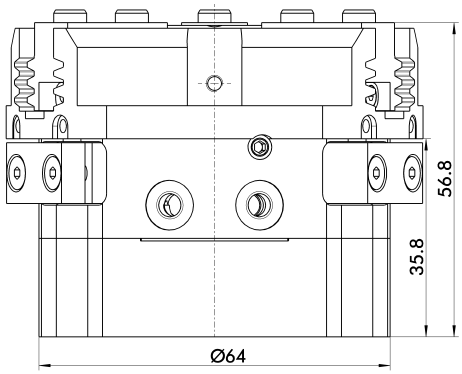


The mechanical gripping force maintenance device ensures a minimum gripping force even in case of pressure drop. This acts as closing force in the AS version, and as opening force in the IS version. In addition, the gripping force maintenance device can also be used for increasing the gripping force or for single-acting gripping.

## Dust-protection version

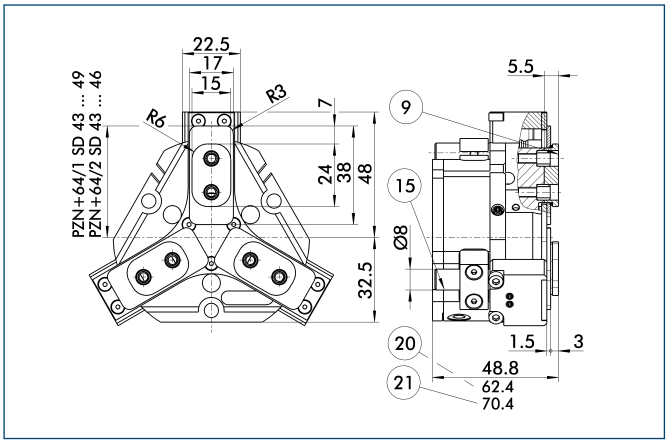


⑨ For mounting screw connection diagram, see basic version
⑮ Sealing bolt
⑳ For AS / IS version
㉑ Applies for KVZ version

The "dust-protection" option increases the degree of protection against penetrating substances. The screw connection diagram shifts by the height of the intermediate jaw. The finger length is still measured from the upper edge of the gripper housing.

## Force intensified version

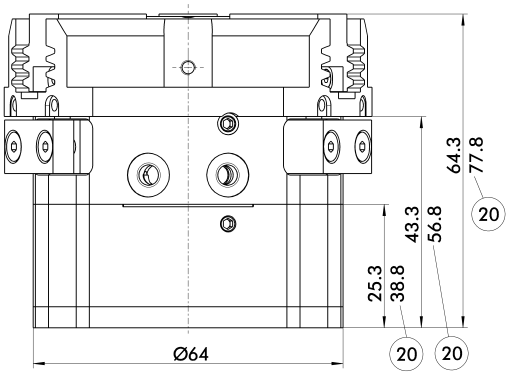


⑳ For AS / IS version

The KVZ cylinder increases the gripping forces during opening and closing. A second, in series-connected piston also increases the force on the wedge hook. The full gripping force shown in the data table is sometimes only reached after a few hundred gripping cycles. Please consider that grippers which are equipped with a gripping force maintenance device (AS / IS) are higher.

## Precision version

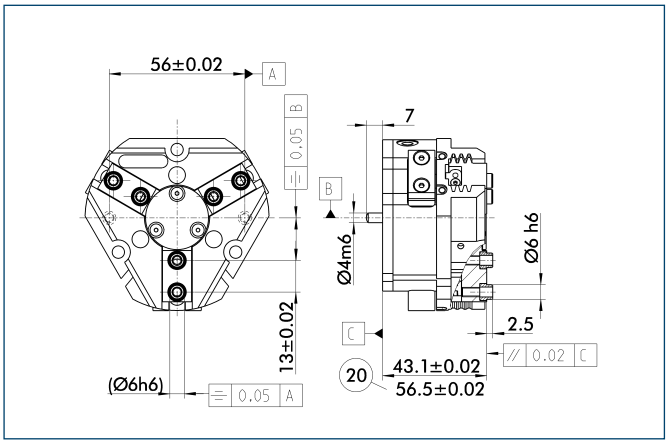


⑳ For AS / IS version

The indicated tolerances just refer to the types of precision versions shown in the chart of technical specifications. All other types of precision versions are available on request.

## Modular Assembly Automation

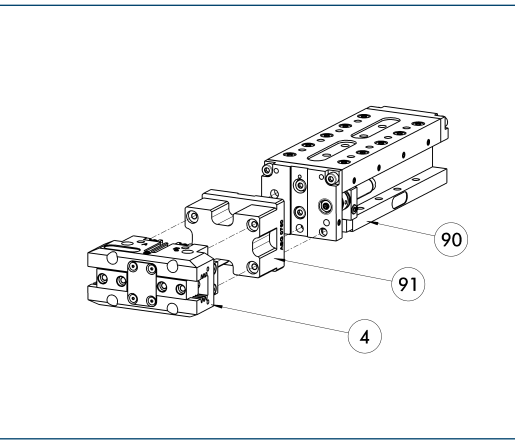


④ Gripper
⑨⓪ CLM
⑨① ASG

This gripper can be combined with the standard linear modules LM, KLM, CLM and ELM of the GEMOTEC modular system. For more information see our main catalog "Modular Assembly Automation".

## Spring-loaded pressure piece

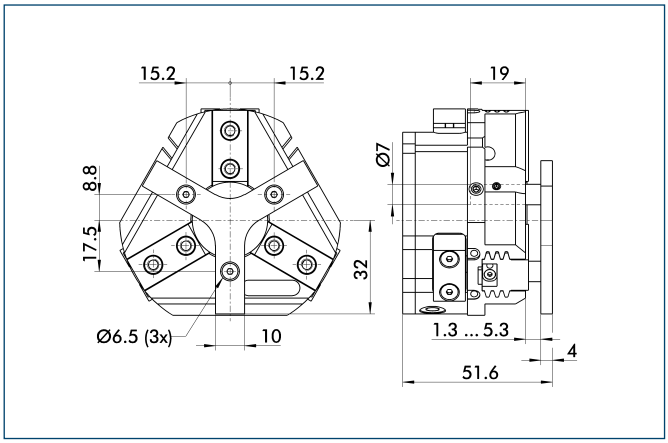


For spring-supported positioning of the workpiece against a stop after the gripper has opened. Especially developed for loading machines.

| Description | ID | Stroke | Min. force |
|---|---|---|---|
| Spring-loaded pressure piece | | | |
| A-PZN-plus/DPZ-plus 64 | **0303720** | 4 mm | 11 N |

ⓘ The pressure piece cannot be combined with the dust-protection version. Please contact us if you require a special pressure piece.

## Protection cover

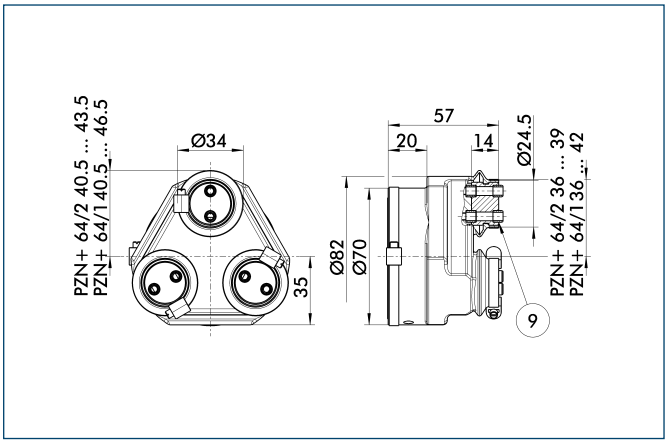


⑨ For mounting screw connection diagram, see basic version

The HUE protective cover completely protects the gripper against external influences up to IP65 if an additional sealing of the cover bottom is provided as part of the application. The mounting diagram shifts by the height of the intermediate jaw.

| Description | ID | Cleanroom class ISO-classification 14644-1 |
|---|---|---|
| Protection cover | | |
| HUE PZN-plus 64 | **0303480** | 2 |

## Quick-change Jaw System

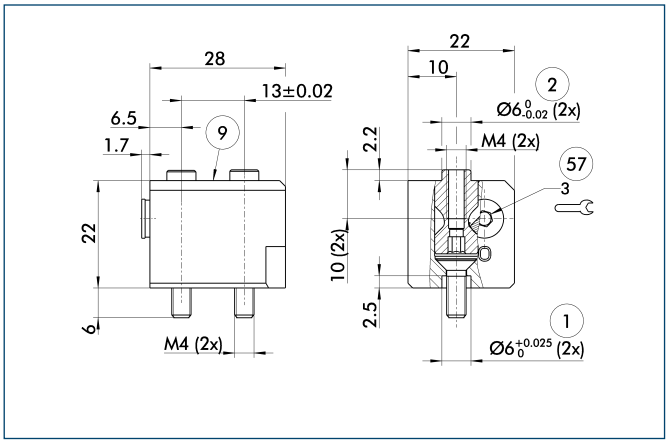


① Gripper connection
② Finger connection
⑨ For mounting screw connection diagram, see basic version
⑰ Locking

The BSWS quick-change jaw system enables top jaws to be changed on the gripper manually and rapidly. An adapter (BSWS-A) and a base (BSWS-B) are required for each gripper jaw.
For a reverse assembly without height set-up, one adapter (BSWS-A) and a kit (BSWS-U) per gripper jaw are required. Another effect of the BSWS-U is, that there are no disturbing fastening bores in the finger contour.

| Description | ID |
|---|---|
| Quick-change Jaw System adapter | |
| BSWS-A 64 | **0303022** |
| Quick-change Jaw System base | |
| BSWS-B 64 | **0303023** |
| Quick-change Jaw System reversed | |
| BSWS-U 64 | **0303041** |

## Universal intermediate jaw

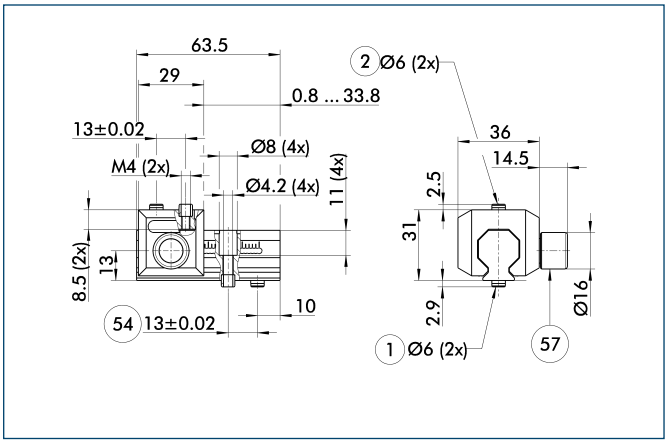


① Gripper connection
② Finger connection
⑭ Optional right or left connection
⑰ Locking

The universal intermediate jaw allows fast tool-free and reliable plugging and shifting of top jaws at the gripper.

| Description | ID | Grid dimension |
|---|---|---|
| Universal intermediate jaw | | |
| UZB 64 | **0300042** | 1.5 mm |

ⓘ The slide UZB-S can be removed completely and has to be ordered separately. Moreover, it allows a fast jaw change.

You can find more detailed information and individual parts of the above-mentioned accessories in the “Accessories” catalog section.

## Force measuring jaws

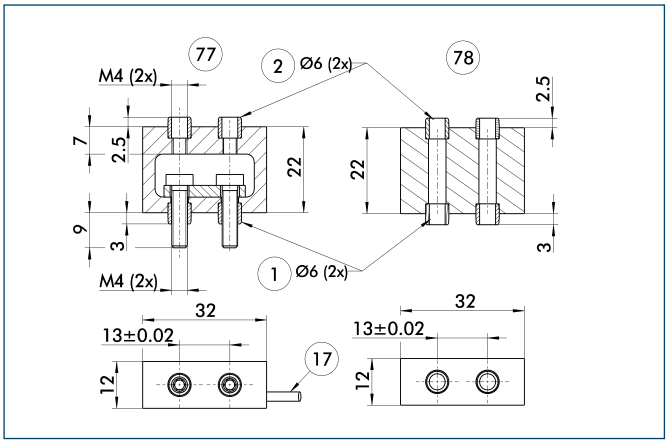


① Gripper connection
② Finger connection
⑰ Cable outlet
⑦⑦ Active intermediate jaws
⑦⑧ Passive intermediate jaws

Force measuring jaws measure gripping forces, but can also determine workpiece weights or dimensional deviations. There are active and passive intermediate jaws (FMS-ZBA or FMS-ZBP). At least one active force measuring jaw is required per gripper, the rest can be passive. For each active jaw, a FMS-A1 control unit and a FMS-A connection cable are required.

| Description | ID |
|---|---|
| Active intermediate jaws | |
| FMS-ZBA 64 | **0301832** |
| Passive intermediate jaws | |
| FMS-ZBP 64 | **0301833** |
| Electronic Processor | |
| FMS-A1 | **0301810** |
| Connection cables | |
| FMS-AK0200 | **0301820** |
| FMS-AK0500 | **0301821** |
| FMS-AK1000 | **0301822** |
| FMS-AK2000 | **0301823** |

## Finger blanks

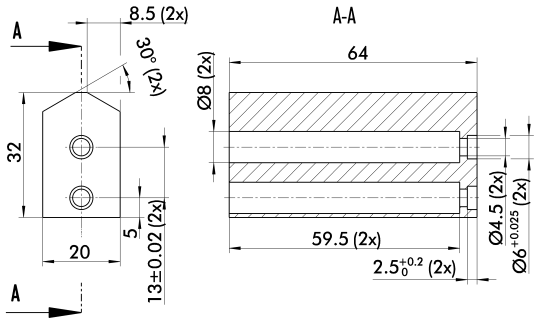


Finger blanks for customized subsequent machining

| Description | ID | Material | Scope of delivery |
|---|---|---|---|
| Finger blanks | | | |
| ABR-plus 64 | **0300010** | Aluminum | 1 |
| SBR-plus 64 | **0300020** | 16 MnCr 5 | 1 |

You can find more detailed information and individual parts of the above-mentioned accessories in the “Accessories” catalog section.

## Tolerance compensation unit

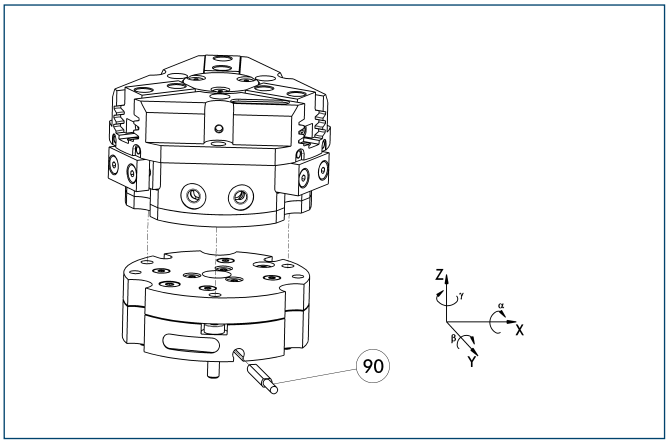


(90) Monitoring of locking

Grippers can be directly mounted without an adapter plate. Tolerance compensation unit and gripper have an identical screw connection diagram. Therefore the tolerance compensation units can be assembled later. Please consider the additional assembly height of the tolerance compensation unit. For details see catalog “Robot Accessories”.

| Description | ID | Locking | Deflection |
|---|---|---|---|
| Compensation unit | | | |
| TCU-064-3-MV-Z | **0324766** | Yes | |
| TCU-064-3-OV-Z | **0324767** | No | |

## Programmable magnetic switch

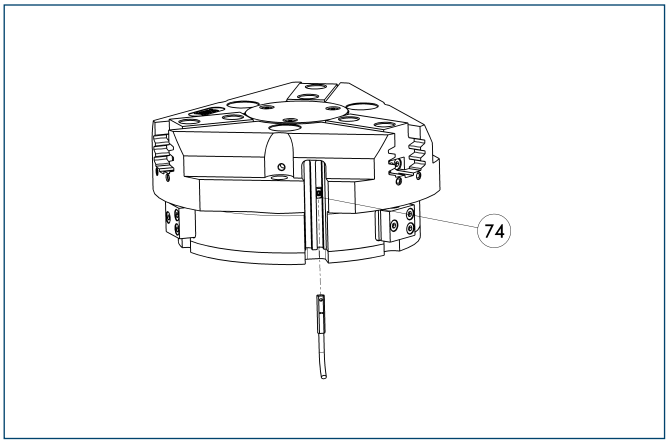


(74) Stop for MMS-P

Position monitoring with two programmable positions per sensor. The end position monitoring is mounted in the C-slot.

| Description | ID | Recommended product |
|---|---|---|
| Programmable magnetic switch | | |
| MMS-P 22-S-M8-PNP | **0301370** | • |
| MMSK-P 22-S-PNP | **0301371** | |
| Connection cables | | |
| KA BG08-L 4P-0500 | **0307767** | |
| KA BG08-L 4P-1000 | **0307768** | |
| KA BW08-L 4P-0500 | **0307765** | |
| KA BW08-L 4P-1000 | **0307766** | |
| Sensor Distributor | | |
| V2-M8-4P-2XM8-3P | **0301380** | |

ⓘ Please note the minimum permitted bending radii for the sensor cables, which are generally 35 mm.
ⓘ Per gripper one sensor (closer/NO) is required, optionally a cable extension.

## Compensation unit with spring reset

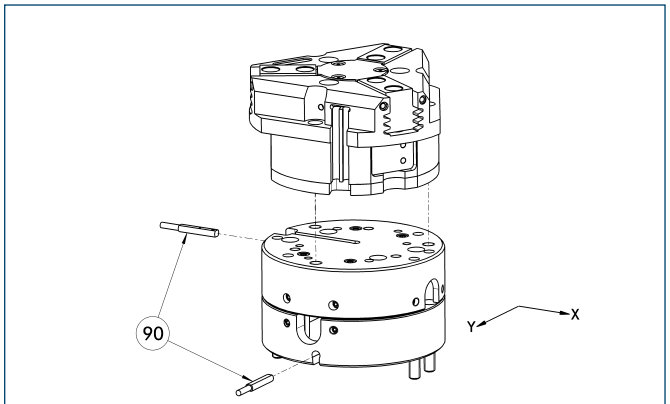


(90) Monitoring

Grippers can be directly mounted without using an adapter plate. For details see our catalog “Robot Accessories”.

| Description | ID | Compensation travel | Reset force |
|---|---|---|---|
| Compensation unit | | | |
| AGE-F-XY-063-1 | **0324940** | ±4 mm | 9 N |
| AGE-F-XY-063-2 | **0324941** | ±4 mm | 10 N |
| AGE-F-XY-063-3 | **0324942** | ±4 mm | 19.3 N |

## Electronic magnetic switches

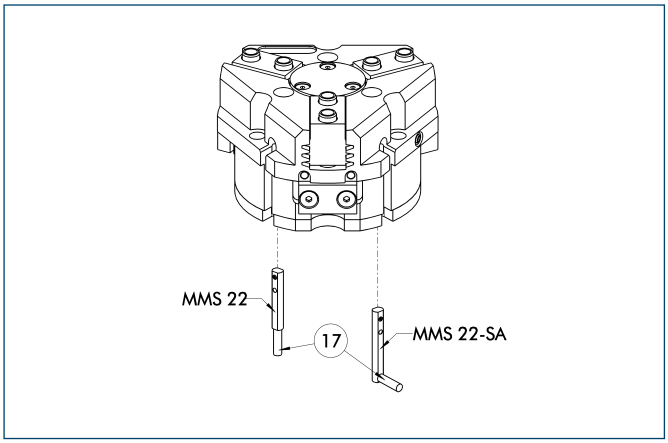


⑰ Cable outlet

End position monitoring for mounting in the C-slot

| Description | ID | Recommended product |
|---|---|---|
| Electronic magnetic switches | | |
| MMS 22-S-M5-PNP | **0301438** | |
| MMS 22-S-M5-NPN | **0301439** | |
| MMS 22-S-M8-PNP | **0301432** | • |
| MMS 22-S-M8-NPN | **0301433** | |
| MMSK 22-S-PNP | **0301434** | |
| MMSK 22-S-NPN | **0301435** | |
| Electronic magnetic switches with lateral cable outlet | | |
| MMS 22-S-M5-PNP-SA | **0301448** | |
| MMS 22-S-M5-NPN-SA | **0301449** | |
| MMS 22-S-M8-PNP-SA | **0301442** | • |
| MMS 22-S-M8-NPN-SA | **0301443** | |
| MMSK 22-S-PNP-SA | **0301444** | |
| MMSK 22-S-NPN-SA | **0301445** | |
| Connection cables | | |
| KA BG05-L 3P-0300 | **0301652** | |
| KA BG08-L 3P-0300-PNP | **0301622** | |
| KA BG08-L 3P-0500-PNP | **0301623** | |
| KA BW05-L 3P-0300 | **0301650** | |
| KA BW08-L 3P-0300-NPN | **0301602** | |
| KA BW08-L 3P-0300-PNP | **0301594** | |
| KA BW08-L 3P-0500-NPN | **9641116** | |
| KA BW08-L 3P-0500-PNP | **0301502** | |
| Cable extensions | | |
| KV BW08-SG08 3P-0030-PNP | **0301495** | |
| KV BW08-SG08 3P-0100-PNP | **0301496** | |
| KV BW08-SG08 3P-0200-PNP | **0301497** | |

ⓘ Two sensors (closer/NO) are required for each gripper, plus extension cables as an option.

ⓘ Please note the minimum permitted bending radii for the sensor cables, which are generally 35 mm.

## Inductive proximity switches

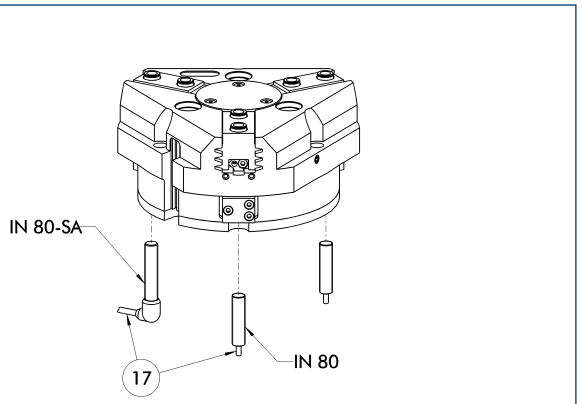


⑰ Cable outlet

End position monitoring for direct mounting

| Description | ID | Recommended product |
|---|---|---|
| Inductive proximity switches | | |
| IN 80-S-M8 | **0301478** | • |
| IN 80-S-M12 | **0301578** | |
| INK 80-S | **0301550** | |
| IN-C 80-S-M8 | **0301475** | |
| Inductive proximity switch with lateral outlet | | |
| IN 80-S-M12-SA | **0301587** | |
| IN 80-S-M8-SA | **0301483** | • |
| INK 80-S-SA | **0301566** | |
| Connection cables | | |
| KA BG08-L 3P-0300-PNP | **0301622** | |
| KA BG08-L 3P-0500-PNP | **0301623** | |
| KA BG12-L 3P-0500-PNP | **30016369** | |
| KA BW08-L 3P-0300-PNP | **0301594** | |
| KA BW08-L 3P-0500-PNP | **0301502** | |
| KA BW12-L 3P-0300-PNP | **0301503** | |
| KA BW12-L 3P-0500-PNP | **0301507** | |
| Cable extensions | | |
| KV BG12-SG12 3P-0030-PNP | **0301999** | |
| KV BG12-SG12 3P-0060-PNP | **0301998** | |
| KV BW08-SG08 3P-0030-PNP | **0301495** | |
| KV BW08-SG08 3P-0100-PNP | **0301496** | |
| KV BW08-SG08 3P-0200-PNP | **0301497** | |
| KV BW12-SG12 3P-0030-PNP | **0301595** | |
| KV BW12-SG12 3P-0100-PNP | **0301596** | |
| KV BW12-SG12 3P-0200-PNP | **0301597** | |

ⓘ Two sensors (closer/NO) are required for each gripper, plus extension cables as an option.

ⓘ Please note the minimum permitted bending radii for the sensor cables, which are generally 35 mm.


You can find more detailed information and individual parts of the above-mentioned accessories in the “Accessories” catalog section.

## Cylindrical Reed Switches

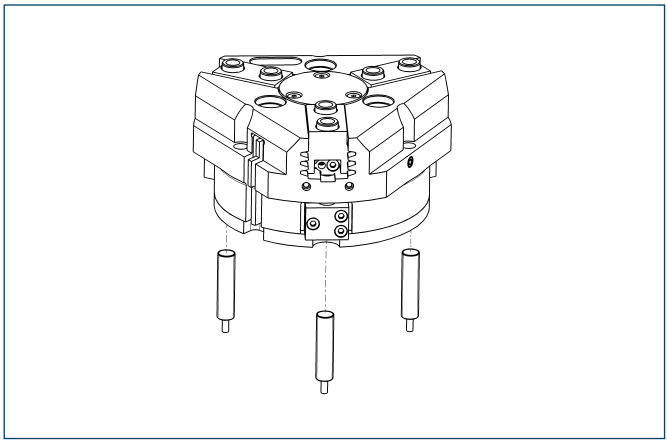

End position monitoring mounted with mounting kit

| Description | ID |
|---|---|
| Mounting kit for proximity switch | |
| AS-RMS 80 PGN/PZN-plus 64/80 | **0377725** |
| Reed Switches | |
| RMS 80-S-M8 | **0377721** |

ⓘ Two sensors (closer/NO) are required for each gripper, plus extension cables as an option.
ⓘ This mounting kit needs to be ordered optionally as an accessory.
ⓘ Please note the minimum permitted bending radii for the sensor cables, which are generally 35 mm.

## Analog position sensor

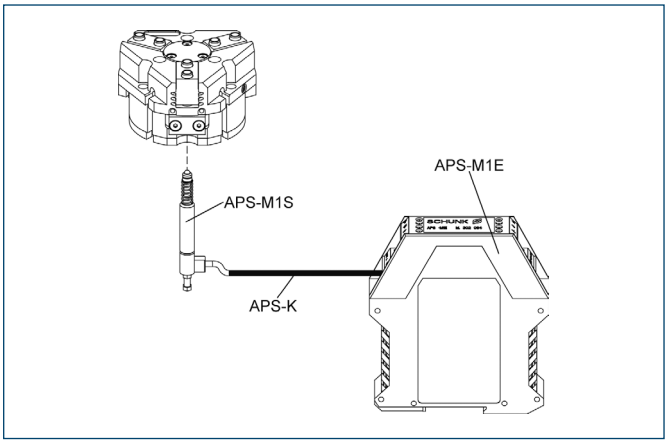


Analog multi position monitoring for any desired positions

| Description | ID |
|---|---|
| Mounting kit | |
| AS-APS-M1-64/1 | **0302075** |
| AS-APS-M1-64/2 | **0302076** |
| Connection cables | |
| APS-K0200 | **0302066** |
| APS-K0700 | **0302068** |
| Electronic Processor | |
| APS-M1E | **0302064** |
| Sensor | |
| APS-M1S | **0302062** |

ⓘ When using an APS system, for each gripper a mounting kit (AS-APS), an APS sensor (APS-M 1S, incl. 3 m cable) as well as an electronics (APS-M1e) are required.
ⓘ An extension cable (APS-K) can be connected between the sensor and the electronics as an option. The max. cable length between the sensor and the electronics is 10 m, between the electronics and their control unit (PLC) it is max. 1 m.

You can find more detailed information and individual parts of the above-mentioned accessories in the “Accessories” catalog section.

## Flexible Position Sensor

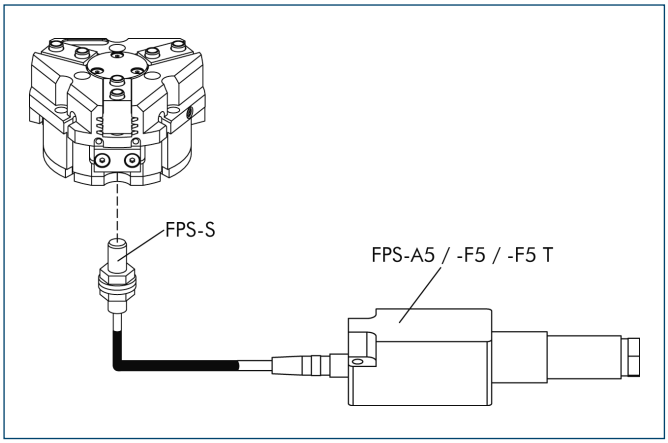


Flexible position monitoring of up to five positions

| Description | ID |
|---|---|
| Mounting kit for FPS | |
| AS-PGN/PZN-plus 64/1, PGN/PZN-plus 80/2 | **0301630** |
| Electronic Processor | |
| FPS-F5 | **0301805** |
| FPS-F5 T | **0301807** |
| Sensor | |
| FPS-S M8 | **0301704** |

ⓘ When using a FPS system, a FPS sensor (FPS-S) and a control unit (FPS-F5 / F5 T or A5) are required for each gripper as well as a mounting kit (AS), if listed. Cable extensions (KV) are available as options in the “Accessories” catalog section.

You can find more detailed information and individual parts of the above-mentioned accessories in the “Accessories” catalog section.

# PZN-plus 80

**Pneumatic • 3-Finger Centric Gripper • Universal Gripper**

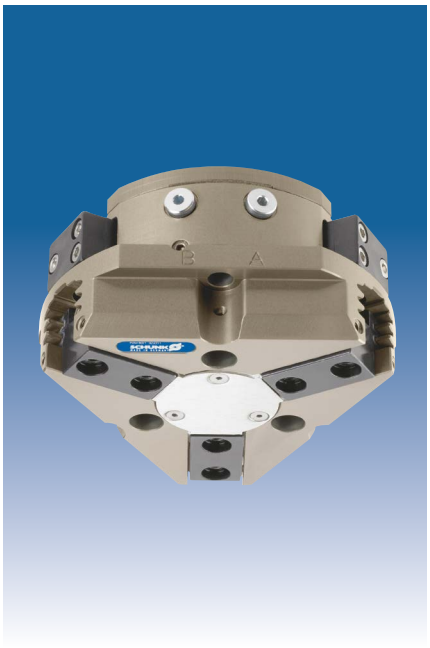

## Gripping force, I.D. gripping

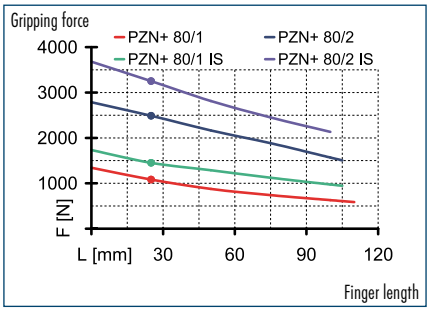


## Gripping force, O.D. gripping

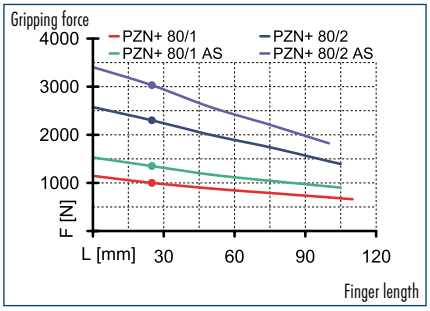


## Finger load

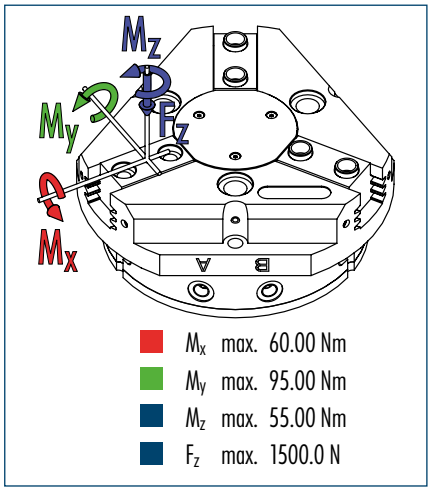


ⓘ The indicated moments and forces are static values, apply per base jaw and may occur simultaneously. $M_y$ may arise in addition to the moment generated by the gripping force itself. If the max. permitted finger weight is exceeded, it is imperative to throttle the air pressure so that the jaw movement occurs without any hitting or bouncing. Service life may be reduced.

## Technical data

| Description | | PZN-plus 80-1 | PZN-plus 80-2 | PZN-plus 80-1-AS | PZN-plus 80-2-AS | PZN-plus 80-1-IS | PZN-plus 80-2-IS |
|---|---|---|---|---|---|---|---|
| **ID** | | **0303311** | **0303411** | **0303511** | **0303611** | **0303541** | **0303641** |
| Stroke per finger | [mm] | 8 | 4 | 8 | 4 | 8 | 4 |
| Closing force | [N] | 1000 | 2300 | 1350 | 3030 | | |
| Opening force | [N] | 1080 | 2490 | | | 1450 | 3250 |
| Min. spring force | [N] | | | 350 | 730 | 370 | 760 |
| Weight | [kg] | 0.79 | 0.79 | 0.96 | 0.96 | 0.96 | 0.96 |
| Recommended workpiece weight | [kg] | 5 | 11.5 | 5 | 11.5 | 5 | 11.5 |
| Air consumption per double stroke | [cm³] | 60 | 60 | 108 | 108 | 108 | 108 |
| Min./max. operating pressure | [bar] | 2/8 | 2/8 | 4/6.5 | 4/6.5 | 4/6.5 | 4/6.5 |
| Nominal operating pressure | [bar] | 6 | 6 | 6 | 6 | 6 | 6 |
| Closing/opening time | [s] | 0.05/0.05 | 0.05/0.05 | 0.03/0.05 | 0.03/0.05 | 0.06/0.04 | 0.06/0.04 |
| Max. permitted finger length | [mm] | 110 | 105 | 105 | 100 | 105 | 100 |
| Max. permitted weight per finger | [kg] | 0.6 | 0.6 | 0.6 | 0.6 | 0.6 | 0.6 |
| IP class | | 40 | 40 | 40 | 40 | 40 | 40 |
| Min./max. ambient temperature | [°C] | -10/90 | -10/90 | -10/90 | -10/90 | -10/90 | -10/90 |
| Repeat accuracy | [mm] | 0.01 | 0.01 | 0.01 | 0.01 | 0.01 | 0.01 |
| Cleanroom class ISO-classification 14644-1 | | 5 | 5 | 5 | 5 | 5 | 5 |
| **OPTIONS and their characteristics** | | | | | | | |
| Dust-protection version | | **37303311** | **37303411** | **37303511** | **37303611** | **37303541** | **37303641** |
| IP class | | 64 | 64 | 64 | 64 | 64 | 64 |
| Weight | [kg] | 1 | 1 | 1.17 | 1.17 | 1.17 | 1.17 |
| Anti-corrosion version | | **38303311** | **38303411** | **38303511** | **38303611** | **38303541** | **38303641** |
| High-temperature version | | **39303311** | **39303411** | **39303511** | **39303611** | **39303541** | **39303641** |
| Min./max. ambient temperature | [°C] | -10/130 | -10/130 | -10/130 | -10/130 | -10/130 | -10/130 |
| Force intensified version | | **PZN-plus 80-1-KVZ** | **PZN-plus 80-2-KVZ** | **PZN-plus 80-1-AS-KVZ** | | **PZN-plus 80-1-IS-KVZ** | |
| ID | | **0372202** | **0372212** | **0372222** | | **0372242** | |
| Closing force | [N] | 1000 | 4140 | 2150 | | | |
| Opening force | [N] | 1945 | 4480 | | | 2315 | |
| Weight | [kg] | 1.2 | 1.2 | 1.4 | | 1.4 | |
| Maximum pressure | [bar] | 8 | 8 | 6 | | 6 | |
| Max. permitted finger length | [mm] | 100 | 80 | 80 | | 80 | |
| Precision version | | **0303341** | **0303441** | **0303491** | **0303591** | | |

## Main view

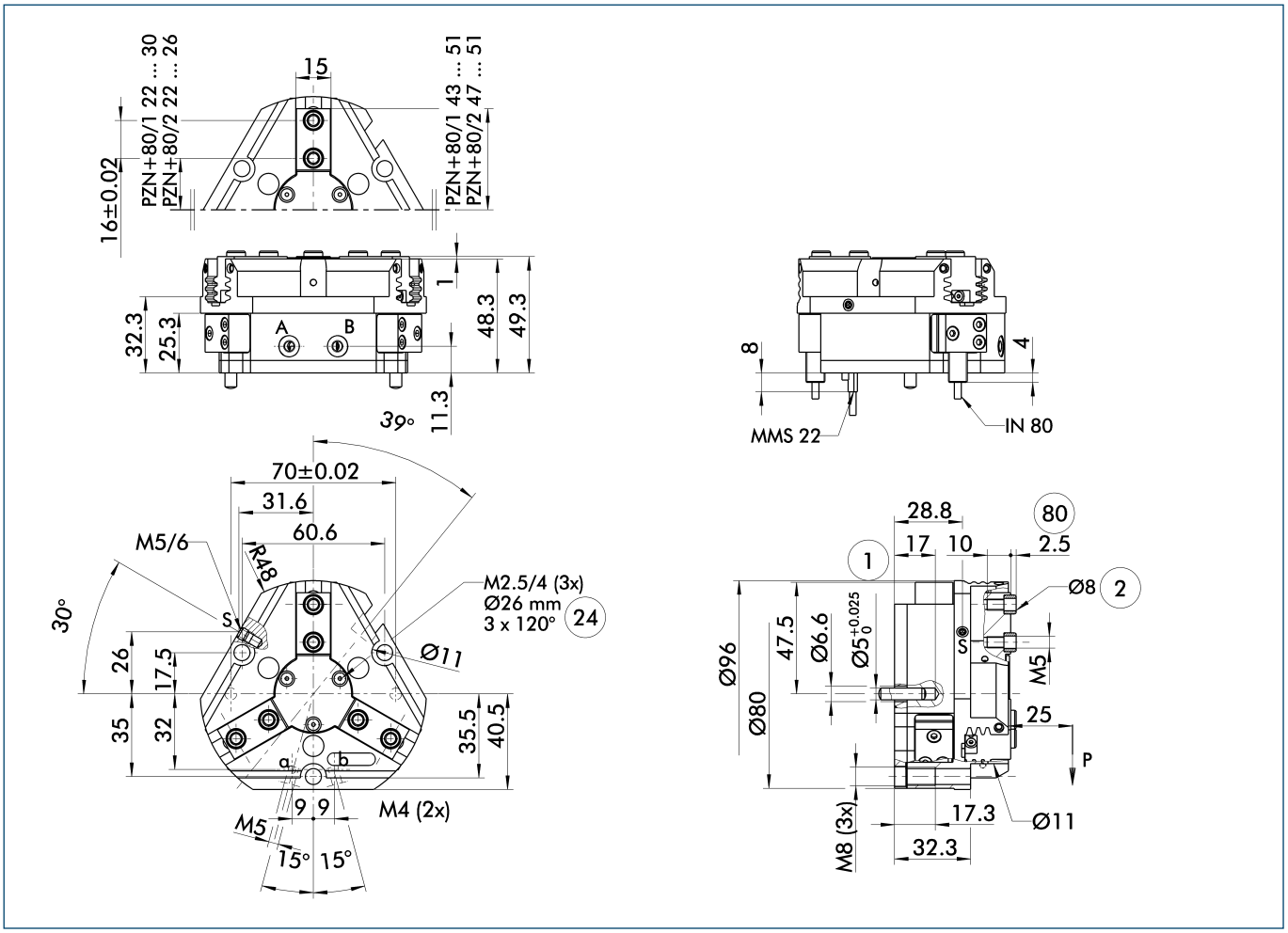


The drawing shows the gripper in the basic version with closed jaws, the dimensions do not include the options described below.

ⓘ The SDV-P pressure maintenance valve can also be used for I.D. or O.D. gripping alternatively or in addition to the spring-loaded, mechanical gripping force maintenance device (see "Accessories" catalog section).

A, a Main/direct connection, gripper opening
B, b Main/direct connection, gripper closing
S Air purge connection
① Gripper connection
② Finger connection
㉔ Bolt circle
㊽ Depth of the centering sleeve hole in the matching part

## Hose-free direct connection

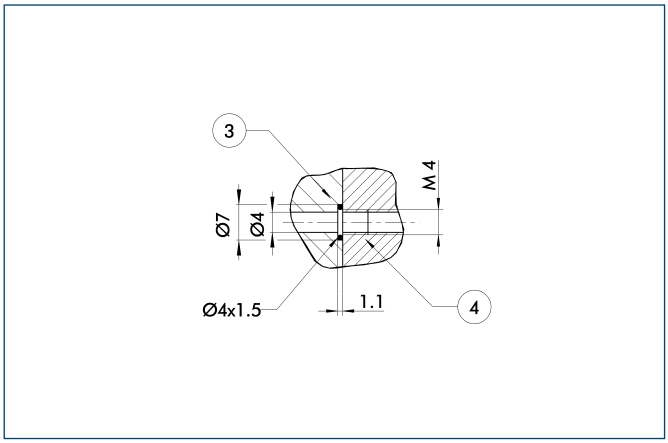


③ Adapter
④ Gripper

The direct connection is used for supplying compressed air without hoses. Instead, the pressure medium is fed through bore-holes in the mounting plate.

## AS/IS gripping force maintenance device

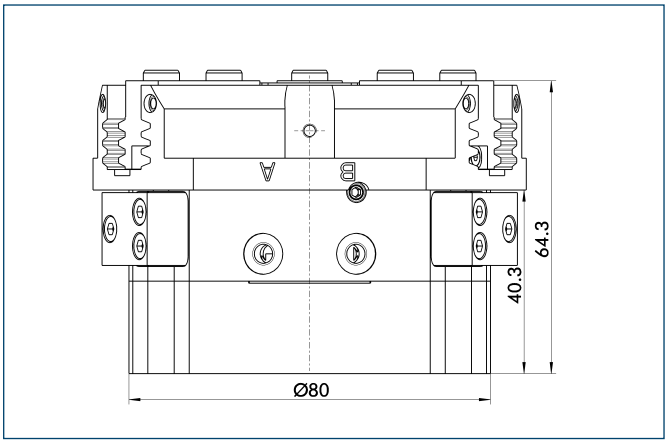


The mechanical gripping force maintenance device ensures a minimum gripping force even in case of pressure drop. This acts as closing force in the AS version, and as opening force in the IS version. In addition, the gripping force maintenance device can also be used for increasing the gripping force or for single-acting gripping.

## Dust-protection version

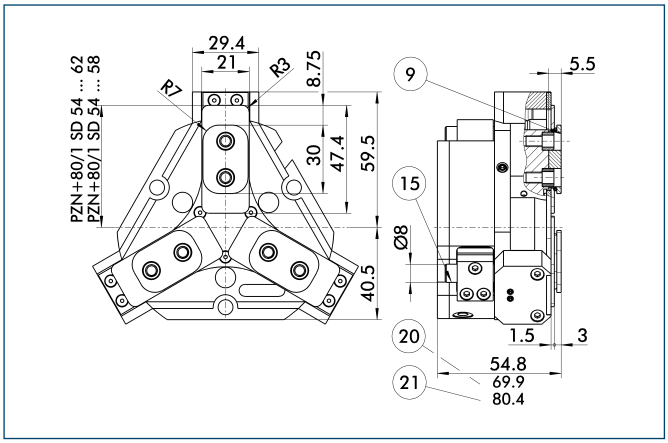


⑨ For mounting screw connection diagram, see basic version
⑮ Sealing bolt
⑳ For AS / IS version
㉑ Applies for KVZ version

The "dust-protection" option increases the degree of protection against penetrating substances. The screw connection diagram shifts by the height of the intermediate jaw. The finger length is still measured from the upper edge of the gripper housing.

## Force intensified version

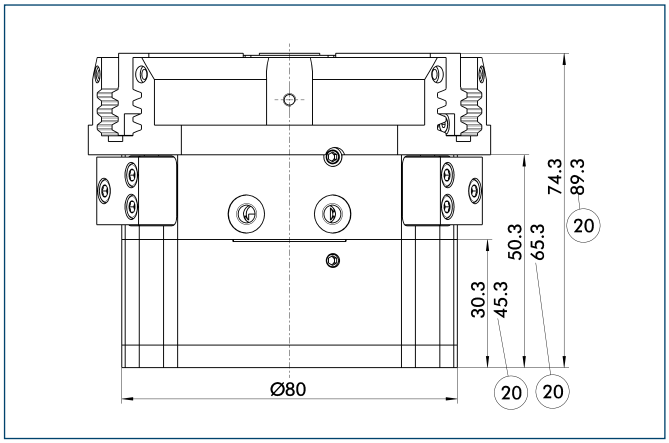


⑳ For AS / IS version

The KVZ cylinder increases the gripping forces during opening and closing. A second, in series-connected piston also increases the force on the wedge hook. The full gripping force shown in the data table is sometimes only reached after a few hundred gripping cycles. Please consider that grippers which are equipped with a gripping force maintenance device (AS / IS) are higher.

## Precision version

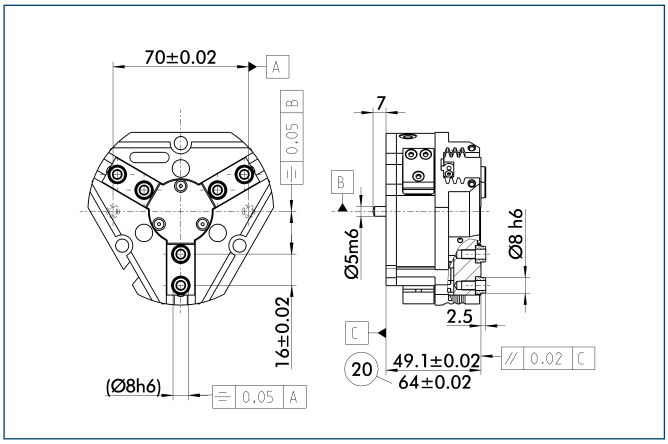


⑳ For AS / IS version

The indicated tolerances just refer to the types of precision versions shown in the chart of technical specifications. All other types of precision versions are available on request.

## Modular Assembly Automation

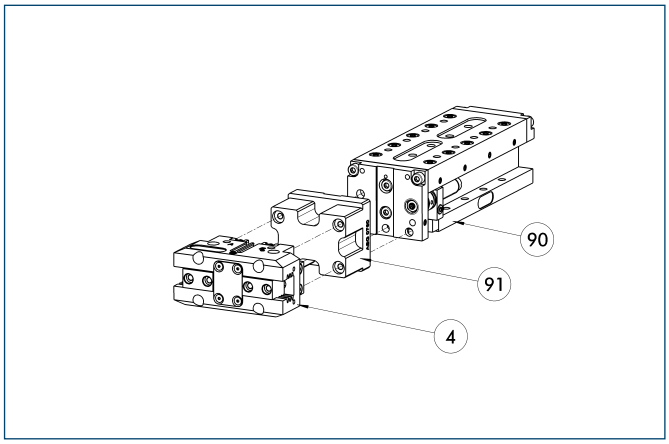


④ Gripper
⑨⓪ CLM
⑨① ASG

This gripper can be combined with the standard linear modules LM, KLM, CLM and ELM of the GEMOTEC modular system. For more information see our main catalog "Modular Assembly Automation".

## Spring-loaded pressure piece

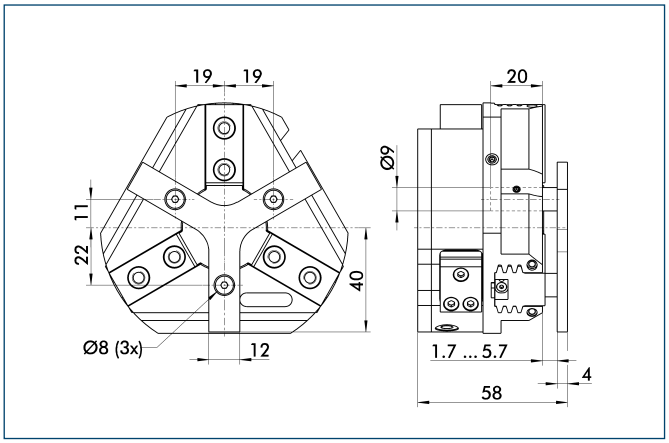


For spring-supported positioning of the workpiece against a stop after the gripper has opened. Especially developed for loading machines.

| Description | ID | Stroke | Min. force |
|---|---|---|---|
| Spring-loaded pressure piece | | | |
| A-PZN-plus/DPZ-plus 80 | **0303721** | 4 mm | 18 N |

ⓘ The pressure piece cannot be combined with the dust-protection version. Please contact us if you require a special pressure piece.

## Protection cover

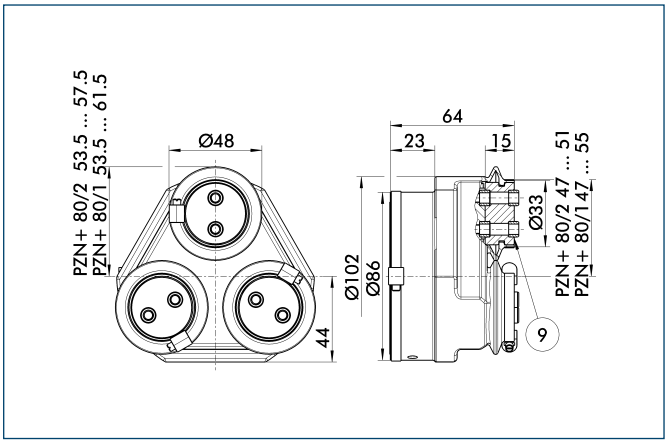


⑨ For mounting screw connection diagram, see basic version

The HUE protective cover completely protects the gripper against external influences up to IP65 if an additional sealing of the cover bottom is provided as part of the application. The mounting diagram shifts by the height of the intermediate jaw.

| Description | ID | Cleanroom class ISO-classification 14644-1 |
|---|---|---|
| Protection cover | | |
| HUE PZN-plus 80 | **0303481** | 2 |

## Quick-change Jaw System

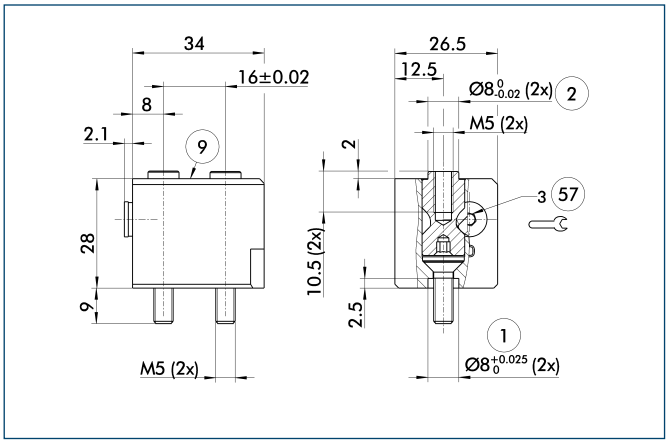


① Gripper connection
② Finger connection
⑨ For mounting screw connection diagram, see basic version
57 Locking

The BSWS quick-change jaw system enables top jaws to be changed on the gripper manually and rapidly. An adapter (BSWS-A) and a base (BSWS-B) are required for each gripper jaw.
For a reverse assembly without height set-up, one adapter (BSWS-A) and a kit (BSWS-U) per gripper jaw are required. Another effect of the BSWS-U is, that there are no disturbing fastening bores in the finger contour.

| Description | ID |
|---|---|
| Quick-change Jaw System adapter | |
| BSWS-A 80 | **0303024** |
| Quick-change Jaw System base | |
| BSWS-B 80 | **0303025** |
| Quick-change Jaw System reversed | |
| BSWS-U 80 | **0303042** |

## Universal intermediate jaw

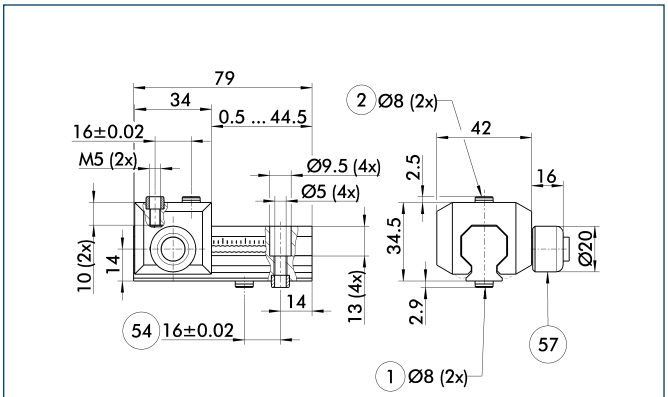


① Gripper connection
② Finger connection
54 Optional right or left connection
57 Locking

The universal intermediate jaw allows fast tool-free and reliable plugging and shifting of top jaws at the gripper.

| Description | ID | Grid dimension |
|---|---|---|
| Universal intermediate jaw | | |
| UZB 80 | **0300043** | 2 mm |
| UZB-S 80 | **5518271** | 2 mm |

ⓘ The slide UZB-S can be removed completely and has to be ordered separately. Moreover, it allows a fast jaw change.

You can find more detailed information and individual parts of the above-mentioned accessories in the “Accessories” catalog section.

## Force measuring jaws

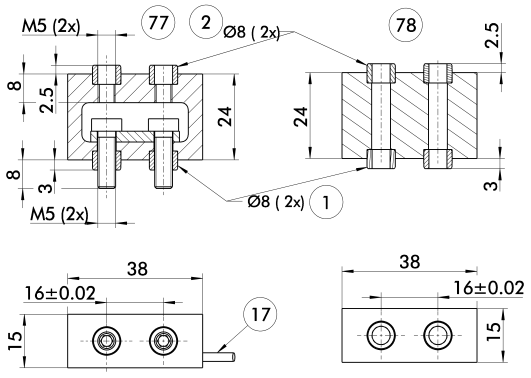


① Gripper connection
② Finger connection
⑰ Cable outlet
⑦⑦ Active intermediate jaws
⑦⑧ Passive intermediate jaws

Force measuring jaws measure gripping forces, but can also determine workpiece weights or dimensional deviations. There are active and passive intermediate jaws (FMS-ZBA or FMS-ZBP). At least one active force measuring jaw is required per gripper, the rest can be passive. For each active jaw, a FMS-A1 control unit and a FMS-A connection cable are required.

| Description | ID |
|---|---|
| Active intermediate jaws | |
| FMS-ZBA 80 | **0301834** |
| Passive intermediate jaws | |
| FMS-ZBP 80 | **0301835** |
| Electronic Processor | |
| FMS-A1 | **0301810** |
| Connection cables | |
| FMS-AK0200 | **0301820** |
| FMS-AK0500 | **0301821** |
| FMS-AK1000 | **0301822** |
| FMS-AK2000 | **0301823** |

## Finger blanks

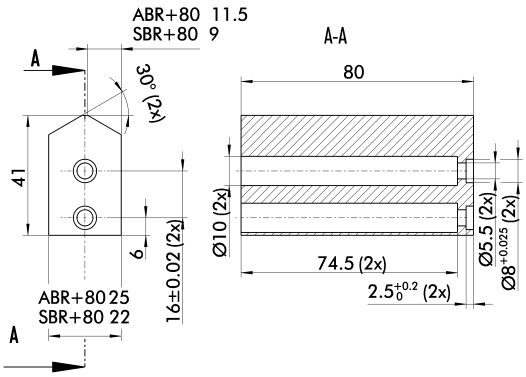


Finger blanks for customized subsequent machining

| Description | ID | Material | Scope of delivery |
|---|---|---|---|
| Finger blanks | | | |
| ABR-plus 80 | **0300011** | Aluminum | 1 |
| SBR-plus 80 | **0300021** | 16 MnCr 5 | 1 |

You can find more detailed information and individual parts of the above-mentioned accessories in the “Accessories” catalog section.

## Tolerance compensation unit

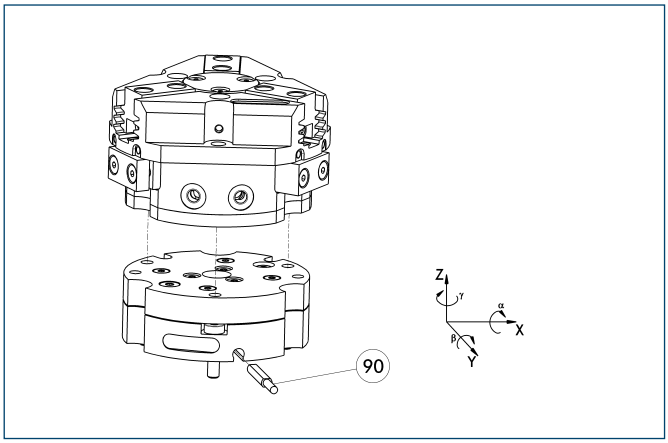


(90) Monitoring of locking

Grippers can be directly mounted without an adapter plate. Tolerance compensation unit and gripper have an identical screw connection diagram. Therefore the tolerance compensation units can be assembled later. Please consider the additional assembly height of the tolerance compensation unit. For details see catalog “Robot Accessories”.

| Description | ID | Locking | Deflection |
|---|---|---|---|
| Compensation unit | | | |
| TCU-080-3-MV-Z | **0324784** | Yes | |
| TCU-080-3-OV-Z | **0324785** | No | |

## Programmable magnetic switch

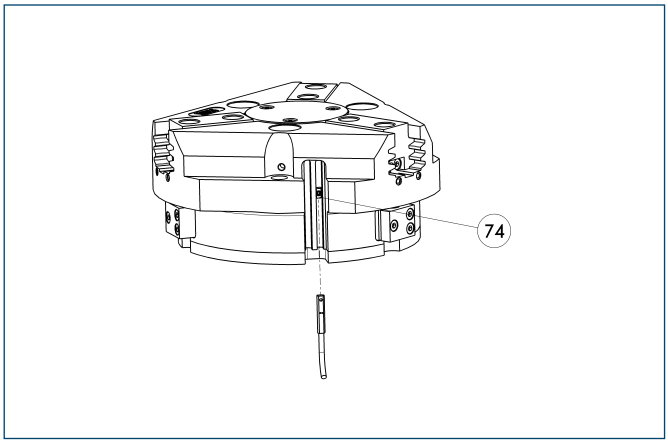


(74) Stop for MMS-P

Position monitoring with two programmable positions per sensor. The end position monitoring is mounted in the C-slot.

| Description | ID | Recommended product |
|---|---|---|
| Programmable magnetic switch | | |
| MMS-P 22-S-M8-PNP | **0301370** | • |
| MMSK-P 22-S-PNP | **0301371** | |
| Connection cables | | |
| KA BG08-L 4P-0500 | **0307767** | |
| KA BG08-L 4P-1000 | **0307768** | |
| KA BW08-L 4P-0500 | **0307765** | |
| KA BW08-L 4P-1000 | **0307766** | |
| Sensor Distributor | | |
| V2-M8-4P-2XM8-3P | **0301380** | |

ⓘ Please note the minimum permitted bending radii for the sensor cables, which are generally 35 mm.
ⓘ Per gripper one sensor (closer/NO) is required, optionally a cable extension.

## Compensation unit with spring reset

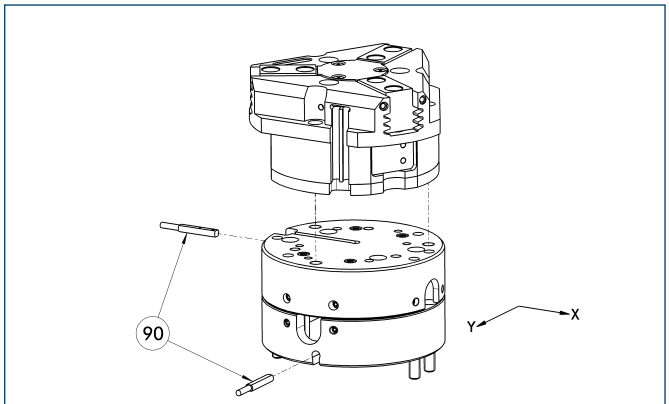


(90) Monitoring

Grippers can be directly mounted without using an adapter plate. For details see our catalog “Robot Accessories”.

| Description | ID | Compensation travel | Reset force |
|---|---|---|---|
| Compensation unit | | | |
| AGE-F-XY-063-1 | **0324940** | ±4 mm | 9 N |
| AGE-F-XY-063-2 | **0324941** | ±4 mm | 10 N |
| AGE-F-XY-063-3 | **0324942** | ±4 mm | 19.3 N |

## Electronic magnetic switches

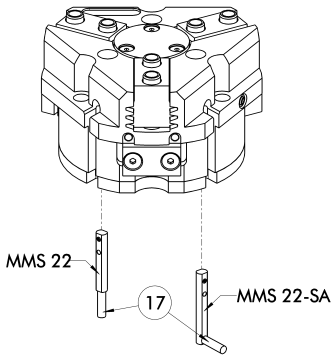


⑰ Cable outlet

End position monitoring for mounting in the C-slot

| Description | ID | Recommended product |
|---|---|---|
| Electronic magnetic switches | | |
| MMS 22-S-M5-PNP | **0301438** | |
| MMS 22-S-M5-NPN | **0301439** | |
| MMS 22-S-M8-PNP | **0301432** | • |
| MMS 22-S-M8-NPN | **0301433** | |
| MMSK 22-S-PNP | **0301434** | |
| MMSK 22-S-NPN | **0301435** | |
| Electronic magnetic switches with lateral cable outlet | | |
| MMS 22-S-M5-PNP-SA | **0301448** | |
| MMS 22-S-M5-NPN-SA | **0301449** | |
| MMS 22-S-M8-PNP-SA | **0301442** | • |
| MMS 22-S-M8-NPN-SA | **0301443** | |
| MMSK 22-S-PNP-SA | **0301444** | |
| MMSK 22-S-NPN-SA | **0301445** | |
| Reed Switches | | |
| RMS 22-S-M8 | **0377720** | • |
| Connection cables | | |
| KA BG05-L 3P-0300 | **0301652** | |
| KA BG08-L 3P-0300-PNP | **0301622** | |
| KA BG08-L 3P-0500-PNP | **0301623** | |
| KA BW05-L 3P-0300 | **0301650** | |
| KA BW08-L 3P-0300-NPN | **0301602** | |
| KA BW08-L 3P-0300-PNP | **0301594** | |
| KA BW08-L 3P-0500-NPN | **9641116** | |
| KA BW08-L 3P-0500-PNP | **0301502** | |
| Cable extensions | | |
| KV BW08-SG08 3P-0030-PNP | **0301495** | |
| KV BW08-SG08 3P-0100-PNP | **0301496** | |
| KV BW08-SG08 3P-0200-PNP | **0301497** | |

ⓘ Two sensors (closer/NO) are required for each gripper, plus extension cables as an option.

ⓘ Please note the minimum permitted bending radii for the sensor cables, which are generally 35 mm.

## Inductive proximity switches

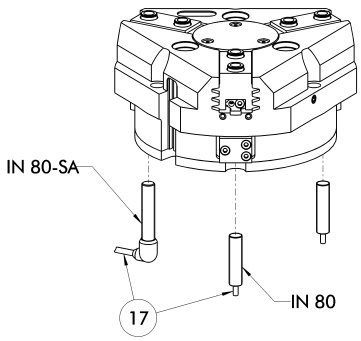


⑰ Cable outlet

End position monitoring for direct mounting

| Description | ID | Recommended product |
|---|---|---|
| Inductive proximity switches | | |
| IN 80-S-M8 | **0301478** | • |
| IN 80-S-M12 | **0301578** | |
| INK 80-S | **0301550** | |
| IN-C 80-S-M8 | **0301475** | |
| Inductive proximity switch with lateral outlet | | |
| IN 80-S-M12-SA | **0301587** | |
| IN 80-S-M8-SA | **0301483** | • |
| INK 80-S-SA | **0301566** | |
| Connection cables | | |
| KA BG08-L 3P-0300-PNP | **0301622** | |
| KA BG08-L 3P-0500-PNP | **0301623** | |
| KA BG12-L 3P-0500-PNP | **30016369** | |
| KA BW08-L 3P-0300-PNP | **0301594** | |
| KA BW08-L 3P-0500-PNP | **0301502** | |
| KA BW12-L 3P-0300-PNP | **0301503** | |
| KA BW12-L 3P-0500-PNP | **0301507** | |
| Cable extensions | | |
| KV BG12-SG12 3P-0030-PNP | **0301999** | |
| KV BG12-SG12 3P-0060-PNP | **0301998** | |
| KV BW08-SG08 3P-0030-PNP | **0301495** | |
| KV BW08-SG08 3P-0100-PNP | **0301496** | |
| KV BW08-SG08 3P-0200-PNP | **0301497** | |
| KV BW12-SG12 3P-0030-PNP | **0301595** | |
| KV BW12-SG12 3P-0100-PNP | **0301596** | |
| KV BW12-SG12 3P-0200-PNP | **0301597** | |

ⓘ Two sensors (closer/NO) are required for each gripper, plus extension cables as an option.

ⓘ Please note the minimum permitted bending radii for the sensor cables, which are generally 35 mm.


You can find more detailed information and individual parts of the above-mentioned accessories in the “Accessories” catalog section.

## Cylindrical Reed Switches

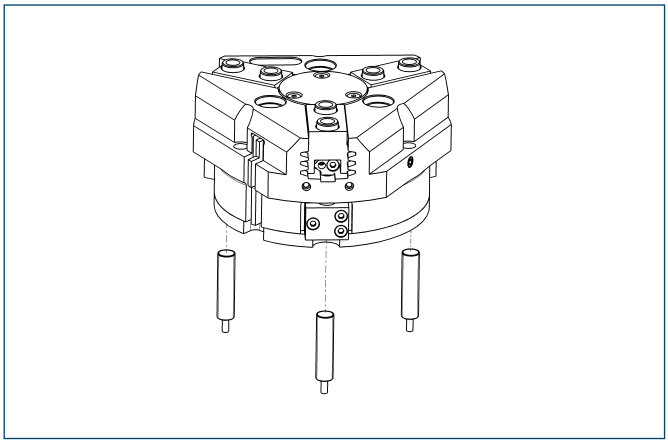

End position monitoring mounted with mounting kit

| Description | ID |
|---|---|
| Mounting kit for proximity switch | |
| AS-RMS 80 PGN/PZN-plus 64/80 | **0377725** |
| Reed Switches | |
| RMS 80-S-M8 | **0377721** |

ⓘ Two sensors (closer/NO) are required for each gripper, plus extension cables as an option.
ⓘ This mounting kit needs to be ordered optionally as an accessory.
ⓘ Please note the minimum permitted bending radii for the sensor cables, which are generally 35 mm.

## Analog position sensor

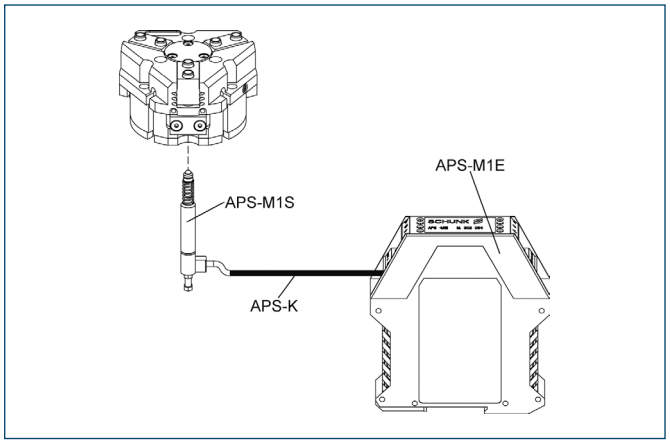


Analog multi position monitoring for any desired positions

| Description | ID |
|---|---|
| Mounting kit | |
| AS-APS-M1-80/1 | **0302077** |
| AS-APS-M1-80/2 | **0302078** |
| Connection cables | |
| APS-K0200 | **0302066** |
| APS-K0700 | **0302068** |
| Electronic Processor | |
| APS-M1E | **0302064** |
| Sensor | |
| APS-M1S | **0302062** |

ⓘ When using an APS system, for each gripper a mounting kit (AS-APS), an APS sensor (APS-M 1S, incl. 3 m cable) as well as an electronics (APS-M1e) are required.
ⓘ An extension cable (APS-K) can be connected between the sensor and the electronics as an option. The max. cable length between the sensor and the electronics is 10 m, between the electronics and their control unit (PLC) it is max. 1 m.

You can find more detailed information and individual parts of the above-mentioned accessories in the “Accessories” catalog section.

## Flexible Position Sensor

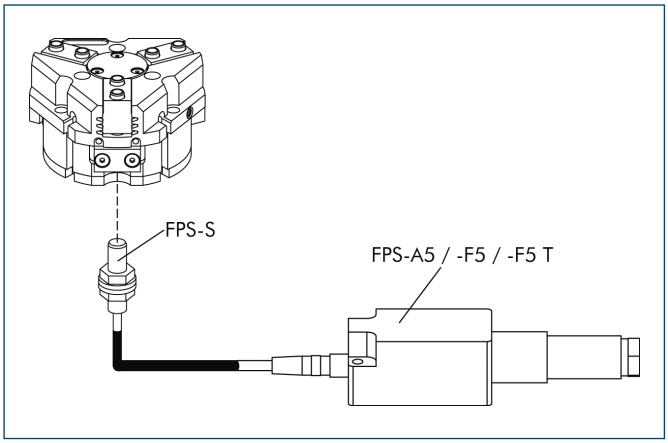


Flexible position monitoring of up to five positions

| Description | ID |
|---|---|
| Mounting kit for FPS | |
| AS-PGN/PZN-plus 64/1, PGN/PZN-plus 80/2 | **0301630** |
| AS-PGN-plus/PZN-plus 80/1, PZB 80/100 | **0301632** |
| Electronic Processor | |
| FPS-F5 | **0301805** |
| FPS-F5 T | **0301807** |
| Sensor | |
| FPS-S M8 | **0301704** |

ⓘ When using a FPS system, a FPS sensor (FPS-S) and a control unit (FPS-F5 / F5 T or A5) are required for each gripper as well as a mounting kit (AS), if listed. Cable extensions (KV) are available as options in the “Accessories” catalog section.

You can find more detailed information and individual parts of the above-mentioned accessories in the “Accessories” catalog section.

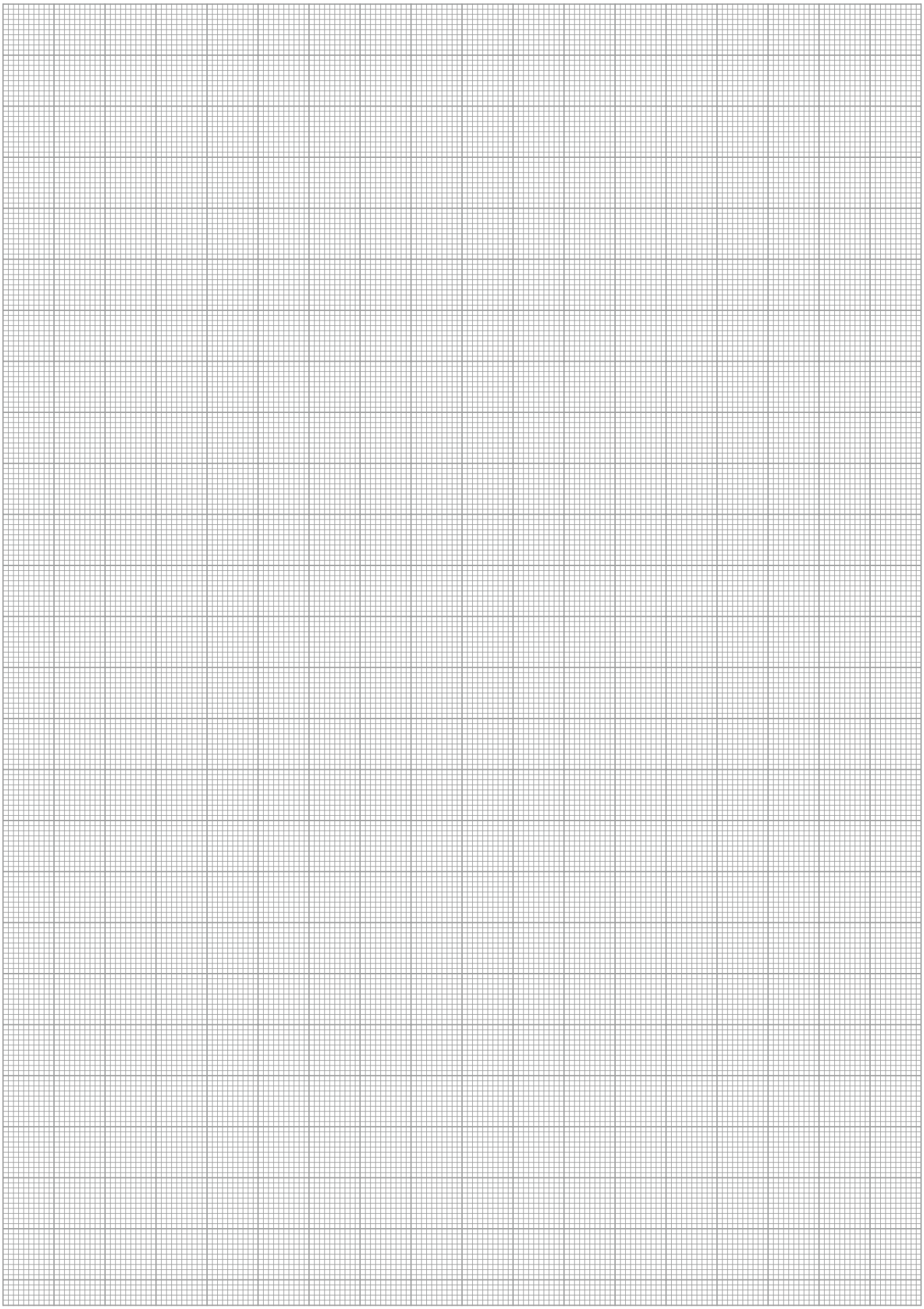

# PZN-plus 100

**Pneumatic • 3-Finger Centric Gripper • Universal Gripper**

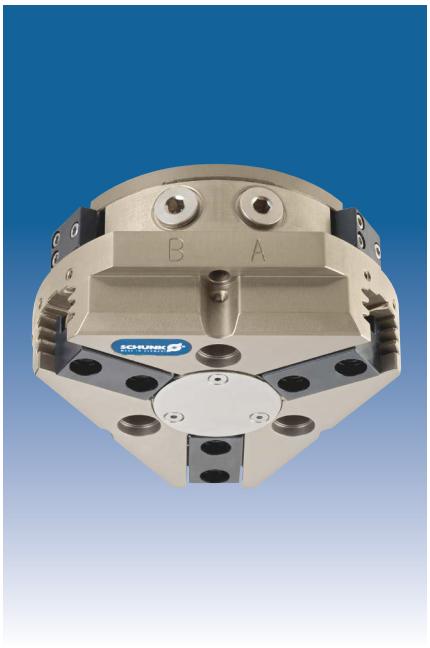

## Gripping force, I.D. gripping

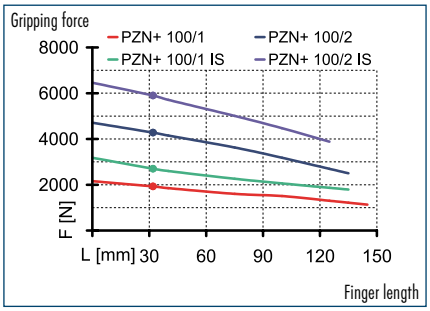


## Gripping force, O.D. gripping

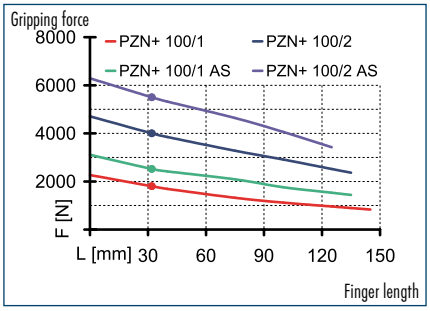


## Finger load

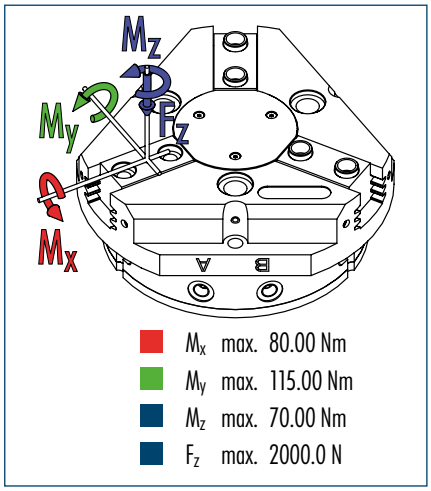


- $M_x$ max. 80.00 Nm
- $M_y$ max. 115.00 Nm
- $M_z$ max. 70.00 Nm
- $F_z$ max. 2000.0 N

ⓘ The indicated moments and forces are static values, apply per base jaw and may occur simultaneously. $M_y$ may arise in addition to the moment generated by the gripping force itself. If the max. permitted finger weight is exceeded, it is imperative to throttle the air pressure so that the jaw movement occurs without any hitting or bouncing. Service life may be reduced.

## Technical data

| Description | | PZN-plus 100-1 | PZN-plus 100-2 | PZN-plus 100-1-AS | PZN-plus 100-2-AS | PZN-plus 100-1-IS | PZN-plus 100-2-IS |
|---|---|---|---|---|---|---|---|
| **ID** | | **0303312** | **0303412** | **0303512** | **0303612** | **0303542** | **0303642** |
| Stroke per finger | [mm] | 10 | 5 | 10 | 5 | 10 | 5 |
| Closing force | [N] | 1800 | 4000 | 2520 | 5500 | | |
| Opening force | [N] | 1920 | 4280 | | | 2700 | 5900 |
| Min. spring force | [N] | | | 720 | 1500 | 780 | 1620 |
| Weight | [kg] | 1.41 | 1.41 | 1.95 | 1.95 | 1.95 | 1.95 |
| Recommended workpiece weight | [kg] | 9 | 20 | 9 | 20 | 9 | 20 |
| Air consumption per double stroke | [cm³] | 120 | 120 | 210 | 210 | 210 | 210 |
| Min./max. operating pressure | [bar] | 2/8 | 2/8 | 4/6.5 | 4/6.5 | 4/6.5 | 4/6.5 |
| Nominal operating pressure | [bar] | 6 | 6 | 6 | 6 | 6 | 6 |
| Closing/opening time | [s] | 0.1/0.1 | 0.1/0.1 | 0.1/0.2 | 0.1/0.2 | 0.2/0.1 | 0.2/0.1 |
| Max. permitted finger length | [mm] | 145 | 135 | 135 | 125 | 135 | 125 |
| Max. permitted weight per finger | [kg] | 1.1 | 1.1 | 1.1 | 1.1 | 1.1 | 1.1 |
| IP class | | 40 | 40 | 40 | 40 | 40 | 40 |
| Min./max. ambient temperature | [°C] | -10/90 | -10/90 | -10/90 | -10/90 | -10/90 | -10/90 |
| Repeat accuracy | [mm] | 0.01 | 0.01 | 0.01 | 0.01 | 0.01 | 0.01 |
| Cleanroom class ISO-classification 14644-1 | | 5 | 5 | 5 | 5 | 5 | 5 |
| **OPTIONS and their characteristics** | | | | | | | |
| Dust-protection version | | **37303312** | **37303412** | **37303512** | **37303612** | **37303542** | **37303642** |
| IP class | | 64 | 64 | 64 | 64 | 64 | 64 |
| Weight | [kg] | 1.9 | 1.9 | 2.44 | 2.44 | 2.44 | 2.44 |
| Anti-corrosion version | | **38303312** | **38303412** | **38303512** | **38303612** | **38303542** | **38303642** |
| High-temperature version | | **39303312** | **39303412** | **39303512** | **39303612** | **39303542** | **39303642** |
| Min./max. ambient temperature | [°C] | -10/130 | -10/130 | -10/130 | -10/130 | -10/130 | -10/130 |
| Force intensified version | | PZN-plus 100-1-KVZ | PZN-plus 100-2-KVZ | PZN-plus 100-1-AS-KVZ | | PZN-plus 100-1-IS-KVZ | |
| ID | | **0372203** | **0372213** | **0372223** | | **0372243** | |
| Closing force | [N] | 3240 | 7200 | 3960 | | | |
| Opening force | [N] | 3455 | 7705 | | | 4235 | |
| Weight | [kg] | 2.3 | 2.3 | 2.7 | | 2.7 | |
| Maximum pressure | [bar] | 8 | 8 | 6 | | 6 | |
| Max. permitted finger length | [mm] | 100 | 80 | 80 | | 80 | |
| Precision version | | **0303342** | **0303442** | **0303492** | **0303592** | | |

## Main view

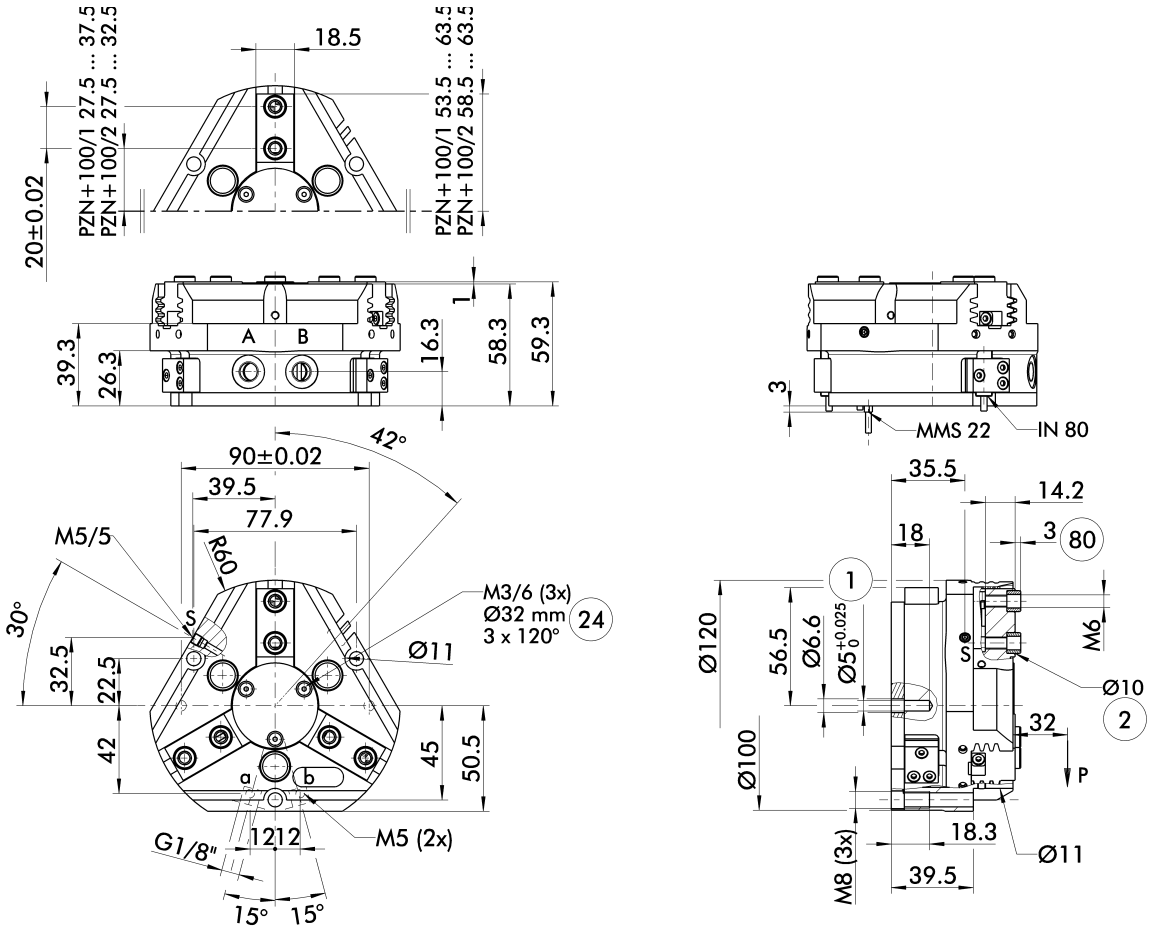


The drawing shows the gripper in the basic version with closed jaws, the dimensions do not include the options described below.

ⓘ The SDV-P pressure maintenance valve can also be used for I.D. or O.D. gripping alternatively or in addition to the spring-loaded, mechanical gripping force maintenance device (see "Accessories" catalog section).

A, a Main/direct connection, gripper opening
B, b Main/direct connection, gripper closing
S Air purge connection
① Gripper connection
② Finger connection
㉔ Bolt circle
㊽ Depth of the centering sleeve hole in the matching part

## Hose-free direct connection

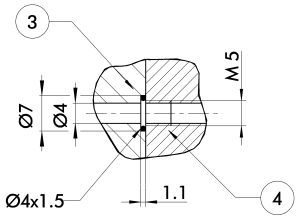


③ Adapter
④ Gripper

The direct connection is used for supplying compressed air without hoses. Instead, the pressure medium is fed through bore-holes in the mounting plate.

## AS/IS gripping force maintenance device

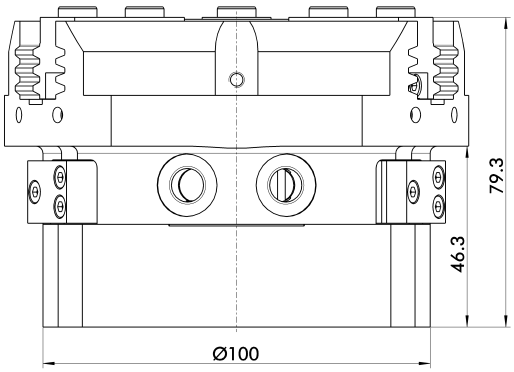


The mechanical gripping force maintenance device ensures a minimum gripping force even in case of pressure drop. This acts as closing force in the AS version, and as opening force in the IS version. In addition, the gripping force maintenance device can also be used for increasing the gripping force or for single-acting gripping.

## Dust-protection version

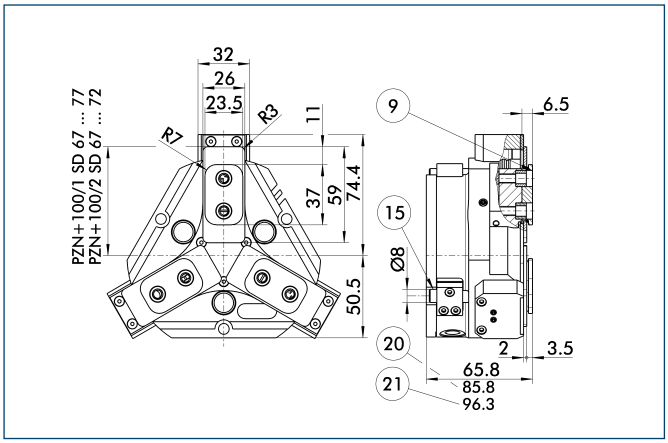


(9) For mounting screw connection diagram, see basic version
(15) Sealing bolt
(20) For AS / IS version
(21) Applies for KVZ version

The "dust-protection" option increases the degree of protection against penetrating substances. The screw connection diagram shifts by the height of the intermediate jaw. The finger length is still measured from the upper edge of the gripper housing.

## Force intensified version

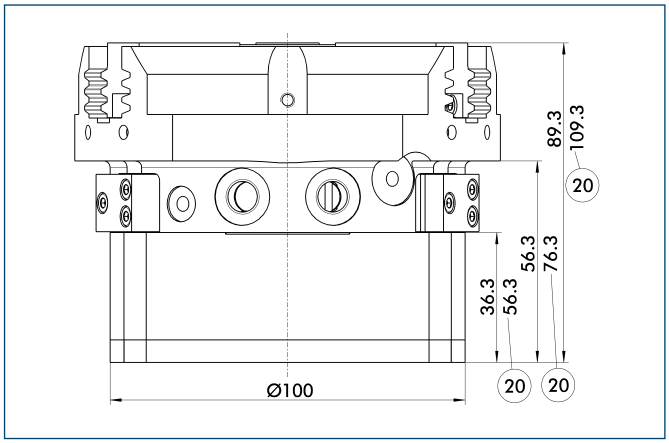


(20) For AS / IS version

The KVZ cylinder increases the gripping forces during opening and closing. A second, in series-connected piston also increases the force on the wedge hook. The full gripping force shown in the data table is sometimes only reached after a few hundred gripping cycles. Please consider that grippers which are equipped with a gripping force maintenance device (AS / IS) are higher.

## Precision version

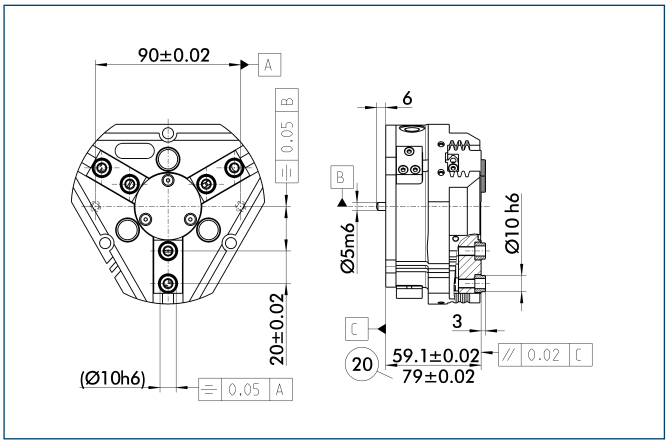


(20) For AS / IS version

The indicated tolerances just refer to the types of precision versions shown in the chart of technical specifications. All other types of precision versions are available on request.

## Modular Assembly Automation

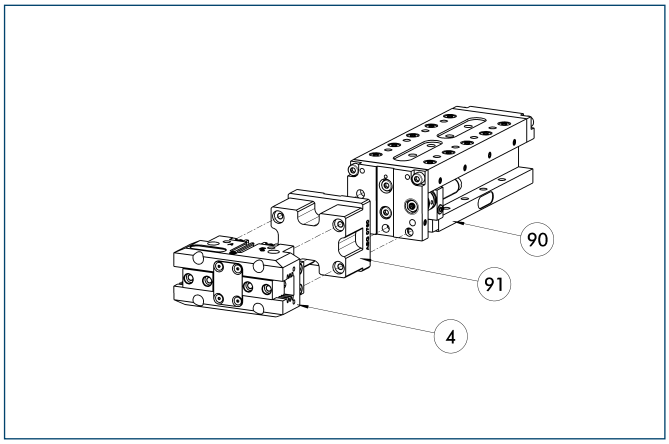


(4) Gripper
(90) CLM
(91) ASG

This gripper can be combined with the standard linear modules LM, KLM, CLM and ELM of the GEMOTEC modular system. For more information see our main catalog "Modular Assembly Automation".

## Spring-loaded pressure piece

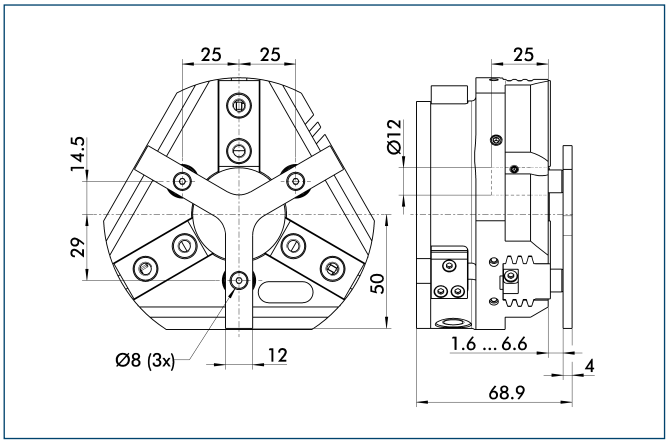


For spring-supported positioning of the workpiece against a stop after the gripper has opened. Especially developed for loading machines.

| Description | ID | Stroke | Min. force |
|---|---|---|---|
| Spring-loaded pressure piece | | | |
| A-PZN-plus/DPZ-plus 100 | **0303722** | 5 mm | 35 N |

ⓘ The pressure piece cannot be combined with the dust-protection version. Please contact us if you require a special pressure piece.

## Protection cover

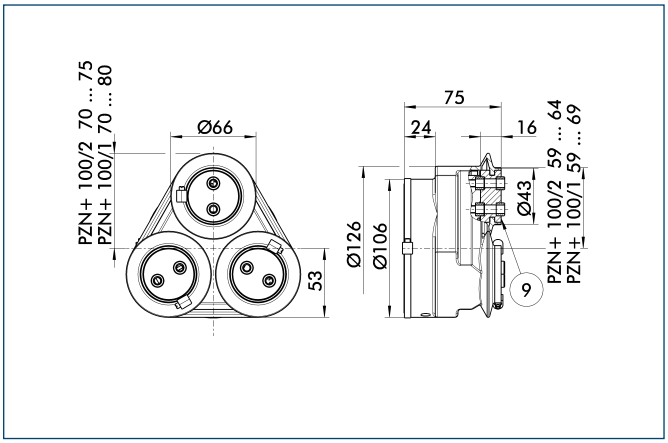


⑨ For mounting screw connection diagram, see basic version

The HUE protective cover completely protects the gripper against external influences up to IP65 if an additional sealing of the cover bottom is provided as part of the application. The mounting diagram shifts by the height of the intermediate jaw.

| Description | ID | Cleanroom class ISO-classification 14644-1 |
|---|---|---|
| Protection cover | | |
| HUE PZN-plus 100 | **0303482** | 2 |

## Quick-change Jaw System

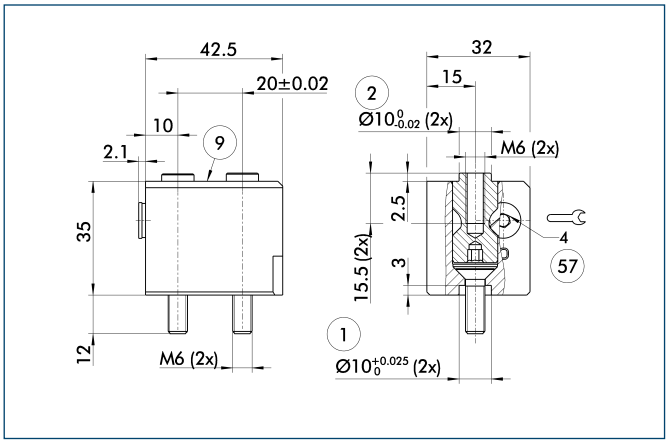


① Gripper connection
② Finger connection
⑨ For mounting screw connection diagram, see basic version
㊼ Locking

The BSWS quick-change jaw system enables top jaws to be changed on the gripper manually and rapidly. An adapter (BSWS-A) and a base (BSWS-B) are required for each gripper jaw.
For a reverse assembly without height set-up, one adapter (BSWS-A) and a kit (BSWS-U) per gripper jaw are required. Another effect of the BSWS-U is, that there are no disturbing fastening bores in the finger contour.

| Description | ID |
|---|---|
| Quick-change Jaw System adapter | |
| BSWS-A 100 | **0303026** |
| Quick-change Jaw System base | |
| BSWS-B 100 | **0303027** |
| Quick-change Jaw System reversed | |
| BSWS-U 100 | **0303043** |

## Universal intermediate jaw

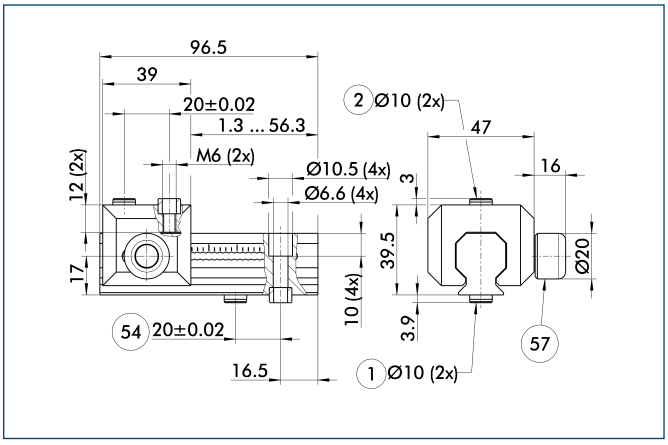


① Gripper connection
② Finger connection
㊹ Optional right or left connection
㊼ Locking

The universal intermediate jaw allows fast tool-free and reliable plugging and shifting of top jaws at the gripper.

| Description | ID | Grid dimension |
|---|---|---|
| Universal intermediate jaw | | |
| UZB 100 | **0300044** | 2.5 mm |
| UZB-S 100 | **5518272** | 2.5 mm |

ⓘ The slide UZB-S can be removed completely and has to be ordered separately. Moreover, it allows a fast jaw change.

You can find more detailed information and individual parts of the above-mentioned accessories in the “Accessories” catalog section.

## Force measuring jaws

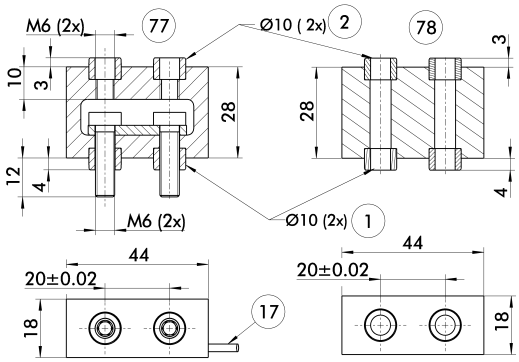


① Gripper connection
② Finger connection
⑰ Cable outlet
⑦⑦ Active intermediate jaws
⑦⑧ Passive intermediate jaws

Force measuring jaws measure gripping forces, but can also determine workpiece weights or dimensional deviations. There are active and passive intermediate jaws (FMS-ZBA or FMS-ZBP). At least one active force measuring jaw is required per gripper, the rest can be passive. For each active jaw, a FMS-A1 control unit and a FMS-A connection cable are required.

| Description | ID |
|---|---|
| Active intermediate jaws | |
| FMS-ZBA 100 | **0301836** |
| Passive intermediate jaws | |
| FMS-ZBP 100 | **0301837** |
| Electronic Processor | |
| FMS-A1 | **0301810** |
| Connection cables | |
| FMS-AK0200 | **0301820** |
| FMS-AK0500 | **0301821** |
| FMS-AK1000 | **0301822** |
| FMS-AK2000 | **0301823** |

## Finger blanks

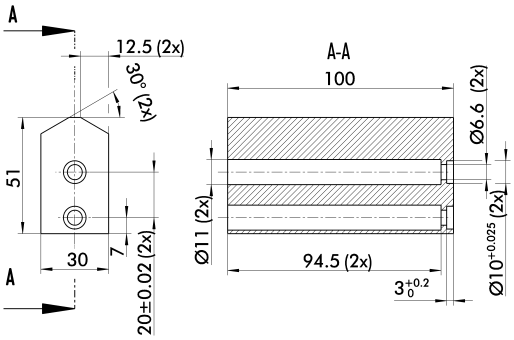


Finger blanks for customized subsequent machining

| Description | ID | Material | Scope of delivery |
|---|---|---|---|
| Finger blanks | | | |
| ABR-plus 100 | **0300012** | Aluminum | 1 |
| SBR-plus 100 | **0300022** | 16 MnCr 5 | 1 |

You can find more detailed information and individual parts of the above-mentioned accessories in the “Accessories” catalog section.

## Tolerance compensation unit

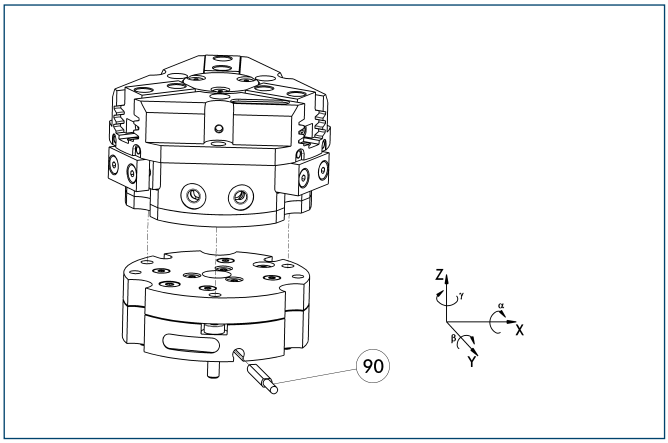


(90) Monitoring of locking

Grippers can be directly mounted without an adapter plate. Tolerance compensation unit and gripper have an identical screw connection diagram. Therefore the tolerance compensation units can be assembled later. Please consider the additional assembly height of the tolerance compensation unit. For details see catalog “Robot Accessories”.

| Description | ID | Locking | Deflection |
|---|---|---|---|
| Compensation unit | | | |
| TCU-100-2-MV-Z | **0324794** | Yes | |
| TCU-100-2-OV-Z | **0324799** | No | |

## Programmable magnetic switch

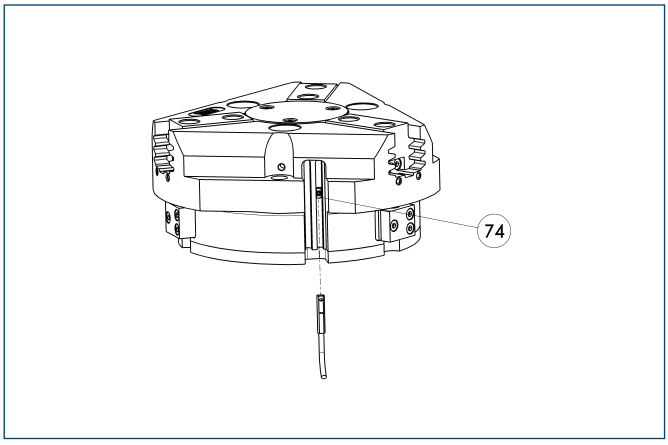


(74) Stop for MMS-P

Position monitoring with two programmable positions per sensor. The end position monitoring is mounted in the C-slot.

| Description | ID | Recommended product |
|---|---|---|
| Programmable magnetic switch | | |
| MMS-P 22-S-M8-PNP | **0301370** | • |
| MMSK-P 22-S-PNP | **0301371** | |
| Connection cables | | |
| KA BG08-L 4P-0500 | **0307767** | |
| KA BG08-L 4P-1000 | **0307768** | |
| KA BW08-L 4P-0500 | **0307765** | |
| KA BW08-L 4P-1000 | **0307766** | |
| Sensor Distributor | | |
| V2-M8-4P-2XM8-3P | **0301380** | |

ⓘ Please note the minimum permitted bending radii for the sensor cables, which are generally 35 mm.
ⓘ Per gripper one sensor (closer/NO) is required, optionally a cable extension.

## Compensation unit with spring reset

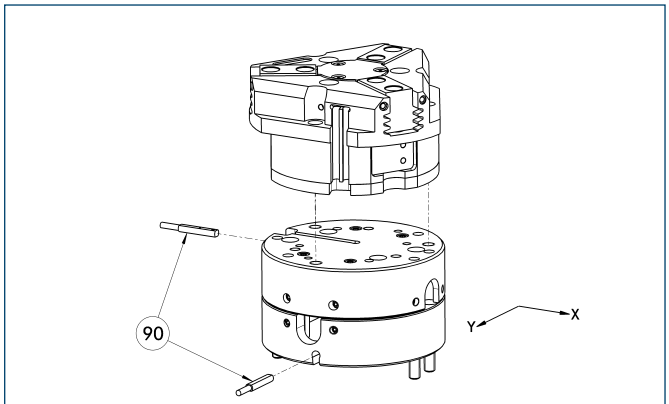


(90) Monitoring

Grippers can be directly mounted without using an adapter plate. For details see our catalog “Robot Accessories”.

| Description | ID | Compensation travel | Reset force |
|---|---|---|---|
| Compensation unit | | | |
| AGE-F-XY-080-1 | **0324960** | ±5 mm | 28.3 N |
| AGE-F-XY-080-2 | **0324961** | ±5 mm | 42.5 N |
| AGE-F-XY-080-3 | **0324962** | ±5 mm | 47.6 N |

## Electronic magnetic switches

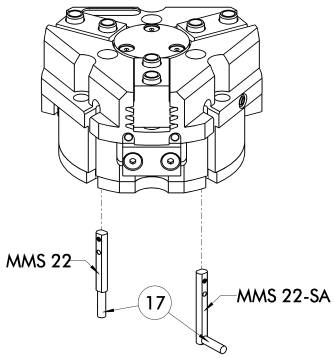


⑰ Cable outlet

End position monitoring for mounting in the C-slot

| Description | ID | Recommended product |
|---|---|---|
| Electronic magnetic switches | | |
| MMS 22-S-M5-PNP | 0301438 | |
| MMS 22-S-M5-NPN | 0301439 | |
| MMS 22-S-M8-PNP | 0301432 | • |
| MMS 22-S-M8-NPN | 0301433 | |
| MMSK 22-S-PNP | 0301434 | |
| MMSK 22-S-NPN | 0301435 | |
| Electronic magnetic switches with lateral cable outlet | | |
| MMS 22-S-M5-PNP-SA | 0301448 | |
| MMS 22-S-M5-NPN-SA | 0301449 | |
| MMS 22-S-M8-PNP-SA | 0301442 | • |
| MMS 22-S-M8-NPN-SA | 0301443 | |
| MMSK 22-S-PNP-SA | 0301444 | |
| MMSK 22-S-NPN-SA | 0301445 | |
| Reed Switches | | |
| RMS 22-S-M8 | 0377720 | • |
| Connection cables | | |
| KA BG05-L 3P-0300 | 0301652 | |
| KA BG08-L 3P-0300-PNP | 0301622 | |
| KA BG08-L 3P-0500-PNP | 0301623 | |
| KA BW05-L 3P-0300 | 0301650 | |
| KA BW08-L 3P-0300-NPN | 0301602 | |
| KA BW08-L 3P-0300-PNP | 0301594 | |
| KA BW08-L 3P-0500-NPN | 9641116 | |
| KA BW08-L 3P-0500-PNP | 0301502 | |
| Cable extensions | | |
| KV BW08-SG08 3P-0030-PNP | 0301495 | |
| KV BW08-SG08 3P-0100-PNP | 0301496 | |
| KV BW08-SG08 3P-0200-PNP | 0301497 | |

ⓘ Two sensors (closer/NO) are required for each gripper, plus extension cables as an option.

ⓘ Please note the minimum permitted bending radii for the sensor cables, which are generally 35 mm.

## Inductive proximity switches

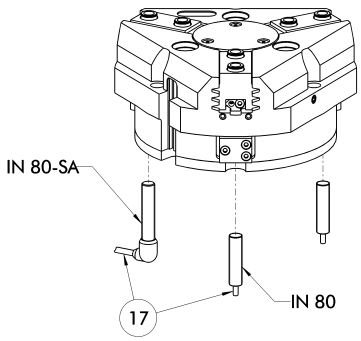


⑰ Cable outlet

End position monitoring for direct mounting

| Description | ID | Recommended product |
|---|---|---|
| Inductive proximity switches | | |
| IN 80-S-M8 | 0301478 | • |
| IN 80-S-M12 | 0301578 | |
| INK 80-S | 0301550 | |
| Inductive proximity switch with lateral outlet | | |
| IN 80-S-M12-SA | 0301587 | |
| IN 80-S-M8-SA | 0301483 | • |
| INK 80-S-SA | 0301566 | |
| Connection cables | | |
| KA BG08-L 3P-0300-PNP | 0301622 | |
| KA BG08-L 3P-0500-PNP | 0301623 | |
| KA BG12-L 3P-0500-PNP | 30016369 | |
| KA BW08-L 3P-0300-PNP | 0301594 | |
| KA BW08-L 3P-0500-PNP | 0301502 | |
| KA BW12-L 3P-0300-PNP | 0301503 | |
| KA BW12-L 3P-0500-PNP | 0301507 | |
| Cable extensions | | |
| KV BG12-SG12 3P-0030-PNP | 0301999 | |
| KV BG12-SG12 3P-0060-PNP | 0301998 | |
| KV BW08-SG08 3P-0030-PNP | 0301495 | |
| KV BW08-SG08 3P-0100-PNP | 0301496 | |
| KV BW08-SG08 3P-0200-PNP | 0301497 | |
| KV BW12-SG12 3P-0030-PNP | 0301595 | |
| KV BW12-SG12 3P-0100-PNP | 0301596 | |
| KV BW12-SG12 3P-0200-PNP | 0301597 | |

ⓘ Two sensors (closer/NO) are required for each gripper, plus extension cables as an option.

ⓘ Please note the minimum permitted bending radii for the sensor cables, which are generally 35 mm.

You can find more detailed information and individual parts of the above-mentioned accessories in the “Accessories” catalog section.

## Cylindrical Reed Switches

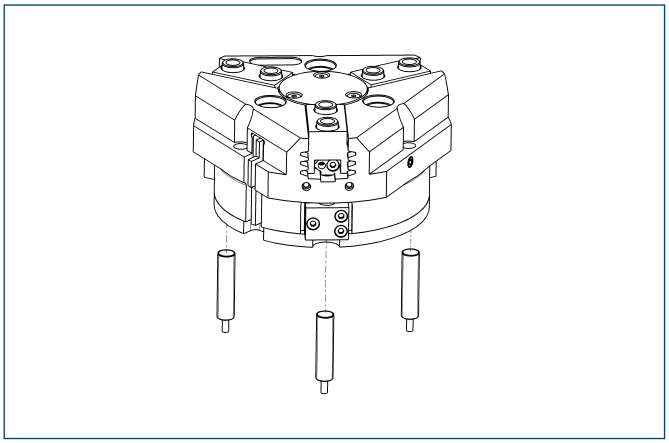

End position monitoring mounted with mounting kit

| Description | ID |
|---|---|
| Mounting kit for proximity switch | |
| AS-RMS 80 PGN/PZN-plus 100/125 | **0377726** |
| Reed Switches | |
| RMS 80-S-M8 | **0377721** |

ⓘ Two sensors (closer/NO) are required for each gripper, plus extension cables as an option.
ⓘ This mounting kit needs to be ordered optionally as an accessory.
ⓘ Please note the minimum permitted bending radii for the sensor cables, which are generally 35 mm.

## Analog position sensor

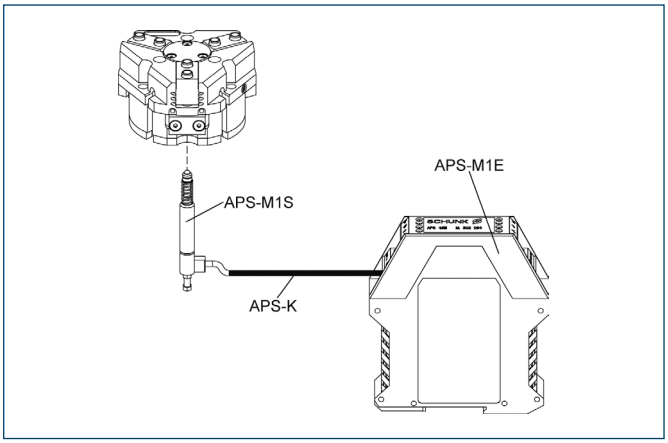


Analog multi position monitoring for any desired positions

| Description | ID |
|---|---|
| Mounting kit | |
| AS-APS-M1-100/1 | **0302079** |
| AS-APS-M1-100/2 | **0302080** |
| Connection cables | |
| APS-K0200 | **0302066** |
| APS-K0700 | **0302068** |
| Electronic Processor | |
| APS-M1E | **0302064** |
| Sensor | |
| APS-M1S | **0302062** |

ⓘ When using an APS system, for each gripper a mounting kit (AS-APS), an APS sensor (APS-M 1S, incl. 3 m cable) as well as an electronics (APS-M1e) are required.
ⓘ An extension cable (APS-K) can be connected between the sensor and the electronics as an option. The max. cable length between the sensor and the electronics is 10 m, between the electronics and their control unit (PLC) it is max. 1 m.

You can find more detailed information and individual parts of the above-mentioned accessories in the “Accessories” catalog section.

## Flexible Position Sensor

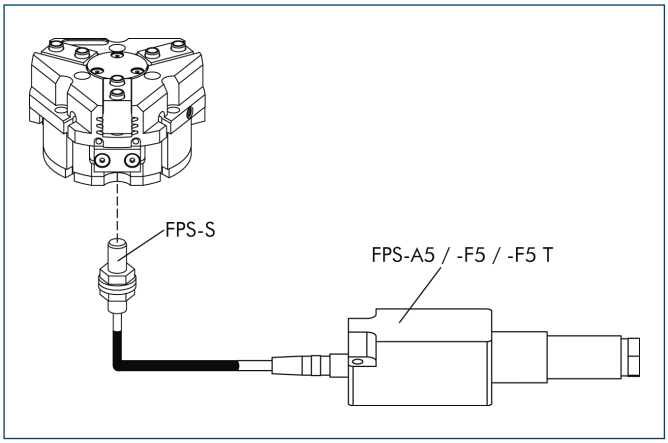


Flexible position monitoring of up to five positions

| Description | ID |
|---|---|
| Mounting kit for FPS | |
| AS-PGN/PZN-plus 100/1 | **0301634** |
| AS-PGN/PZN-plus 100/2, PZB 125 | **0301635** |
| Electronic Processor | |
| FPS-F5 | **0301805** |
| FPS-F5 T | **0301807** |
| Sensor | |
| FPS-S M8 | **0301704** |

ⓘ When using a FPS system, a FPS sensor (FPS-S) and a control unit (FPS-F5 / F5 T or A5) are required for each gripper as well as a mounting kit (AS), if listed. Cable extensions (KV) are available as options in the “Accessories” catalog section.

You can find more detailed information and individual parts of the above-mentioned accessories in the “Accessories” catalog section.

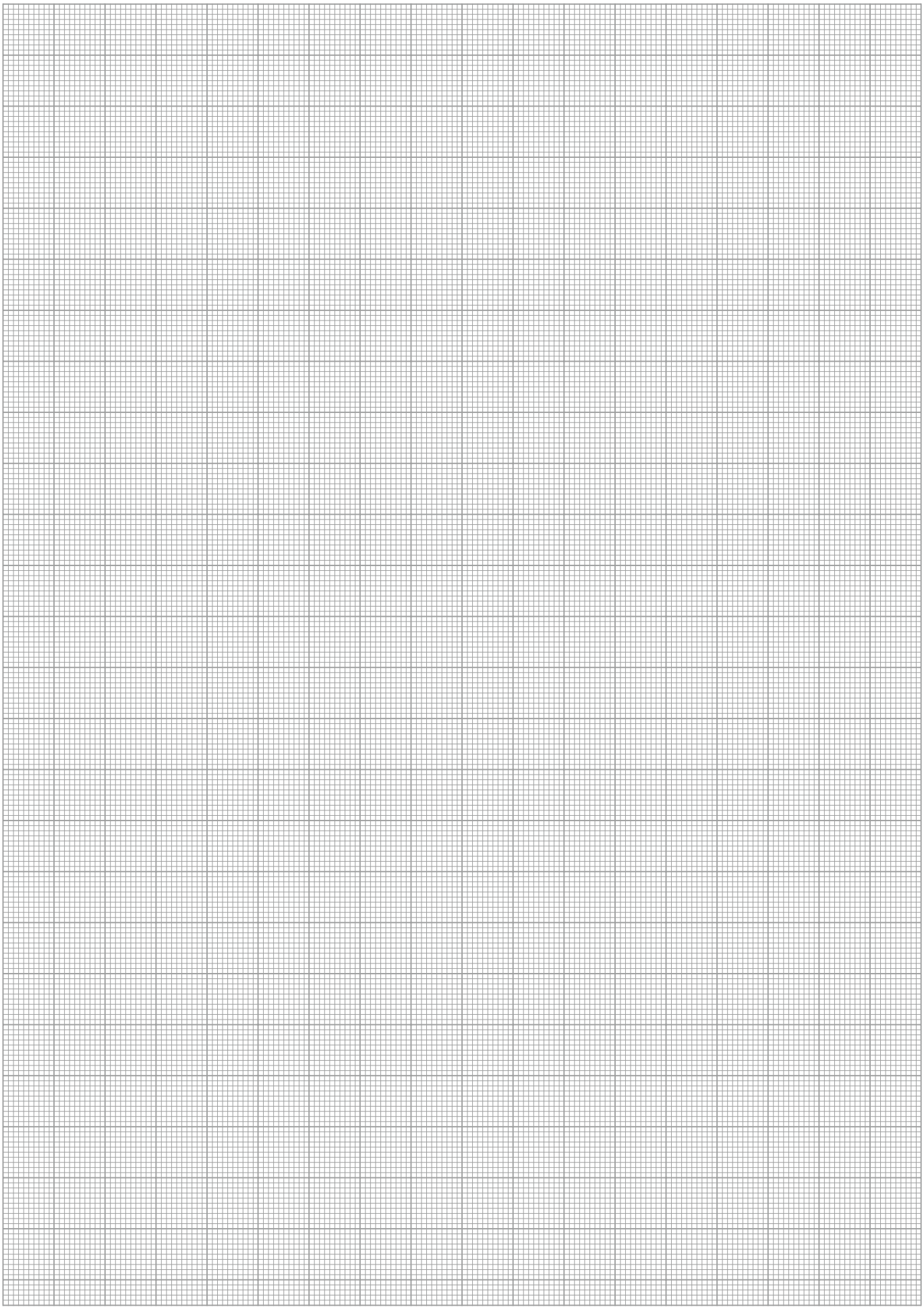

# PZN-plus 125

**Pneumatic • 3-Finger Centric Gripper • Universal Gripper**



## Gripping force, I.D. gripping

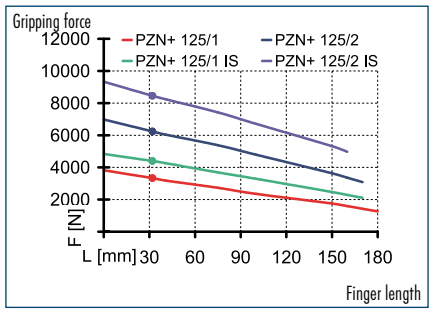


## Gripping force, O.D. gripping

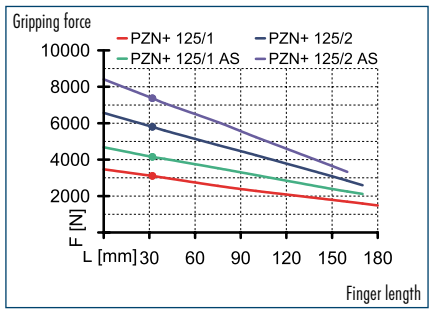


## Finger load

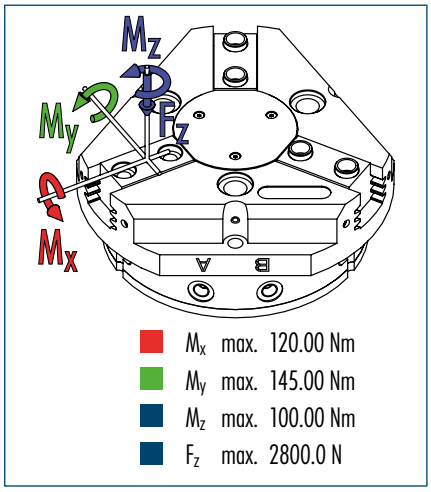


- $M_x$ max. 120.00 Nm
- $M_y$ max. 145.00 Nm
- $M_z$ max. 100.00 Nm
- $F_z$ max. 2800.0 N

ⓘ The indicated moments and forces are static values, apply per base jaw and may occur simultaneously. $M_y$ may arise in addition to the moment generated by the gripping force itself. If the max. permitted finger weight is exceeded, it is imperative to throttle the air pressure so that the jaw movement occurs without any hitting or bouncing. Service life may be reduced.

## Technical data

| Description | | PZN-plus 125-1 | PZN-plus 125-2 | PZN-plus 125-1-AS | PZN-plus 125-2-AS | PZN-plus 125-1-IS | PZN-plus 125-2-IS |
|---|---|---|---|---|---|---|---|
| **ID** | | **0303313** | **0303413** | **0303513** | **0303613** | **0303543** | **0303643** |
| Stroke per finger | [mm] | 13 | 6 | 13 | 6 | 13 | 6 |
| Closing force | [N] | 3100 | 5800 | 4150 | 7970 | | |
| Opening force | [N] | 3330 | 6240 | | | 4400 | 8450 |
| Min. spring force | [N] | | | 1050 | 2170 | 1070 | 2210 |
| Weight | [kg] | 2.47 | 2.47 | 3.34 | 3.34 | 3.34 | 3.34 |
| Recommended workpiece weight | [kg] | 15.5 | 29 | 15.5 | 29 | 15.5 | 29 |
| Air consumption per double stroke | [cm³] | 230 | 230 | 383 | 383 | 383 | 383 |
| Min./max. operating pressure | [bar] | 2/8 | 2/8 | 4/6.5 | 4/6.5 | 4/6.5 | 4/6.5 |
| Nominal operating pressure | [bar] | 6 | 6 | 6 | 6 | 6 | 6 |
| Closing/opening time | [s] | 0.2/0.2 | 0.2/0.2 | 0.17/0.35 | 0.17/0.35 | 0.35/0.17 | 0.35/0.17 |
| Max. permitted finger length | [mm] | 180 | 170 | 170 | 160 | 170 | 160 |
| Max. permitted weight per finger | [kg] | 2.1 | 2.1 | 2.1 | 2.1 | 2.1 | 2.1 |
| IP class | | 40 | 40 | 40 | 40 | 40 | 40 |
| Min./max. ambient temperature | [°C] | -10/90 | -10/90 | -10/90 | -10/90 | -10/90 | -10/90 |
| Repeat accuracy | [mm] | 0.01 | 0.01 | 0.01 | 0.01 | 0.01 | 0.01 |
| Cleanroom class ISO-classification 14644-1 | | 5 | 5 | 5 | 5 | 5 | 5 |
| **OPTIONS and their characteristics** | | | | | | | |
| Dust-protection version | | **37303313** | **37303413** | **37303513** | **37303613** | **37303543** | **37303643** |
| IP class | | 64 | 64 | 64 | 64 | 64 | 64 |
| Weight | [kg] | 2.9 | 2.9 | 3.7 | 3.7 | 3.7 | 3.7 |
| Anti-corrosion version | | **38303313** | **38303413** | **38303513** | **38303613** | **38303543** | **38303643** |
| High-temperature version | | **39303313** | **39303413** | **39303513** | **39303613** | **39303543** | **39303643** |
| Min./max. ambient temperature | [°C] | -10/130 | -10/130 | -10/130 | -10/130 | -10/130 | -10/130 |
| Force intensified version | | PZN-plus 125-1-KVZ | PZN-plus 125-2-KVZ | PZN-plus 125-1-AS-KVZ | | PZN-plus 125-1-IS-KVZ | |
| ID | | **0372204** | **0372214** | **0372224** | | **0372244** | |
| Closing force | [N] | 5580 | 10440 | 6630 | | | |
| Opening force | [N] | 5935 | 11230 | | | 7005 | |
| Weight | [kg] | 3.7 | 3.7 | 4.5 | | 4.5 | |
| Maximum pressure | [bar] | 8 | 8 | 6 | | 6 | |
| Max. permitted finger length | [mm] | 125 | 100 | 100 | | 100 | |
| Precision version | | **0303343** | **0303443** | **0303493** | **0303593** | | |

## Main view

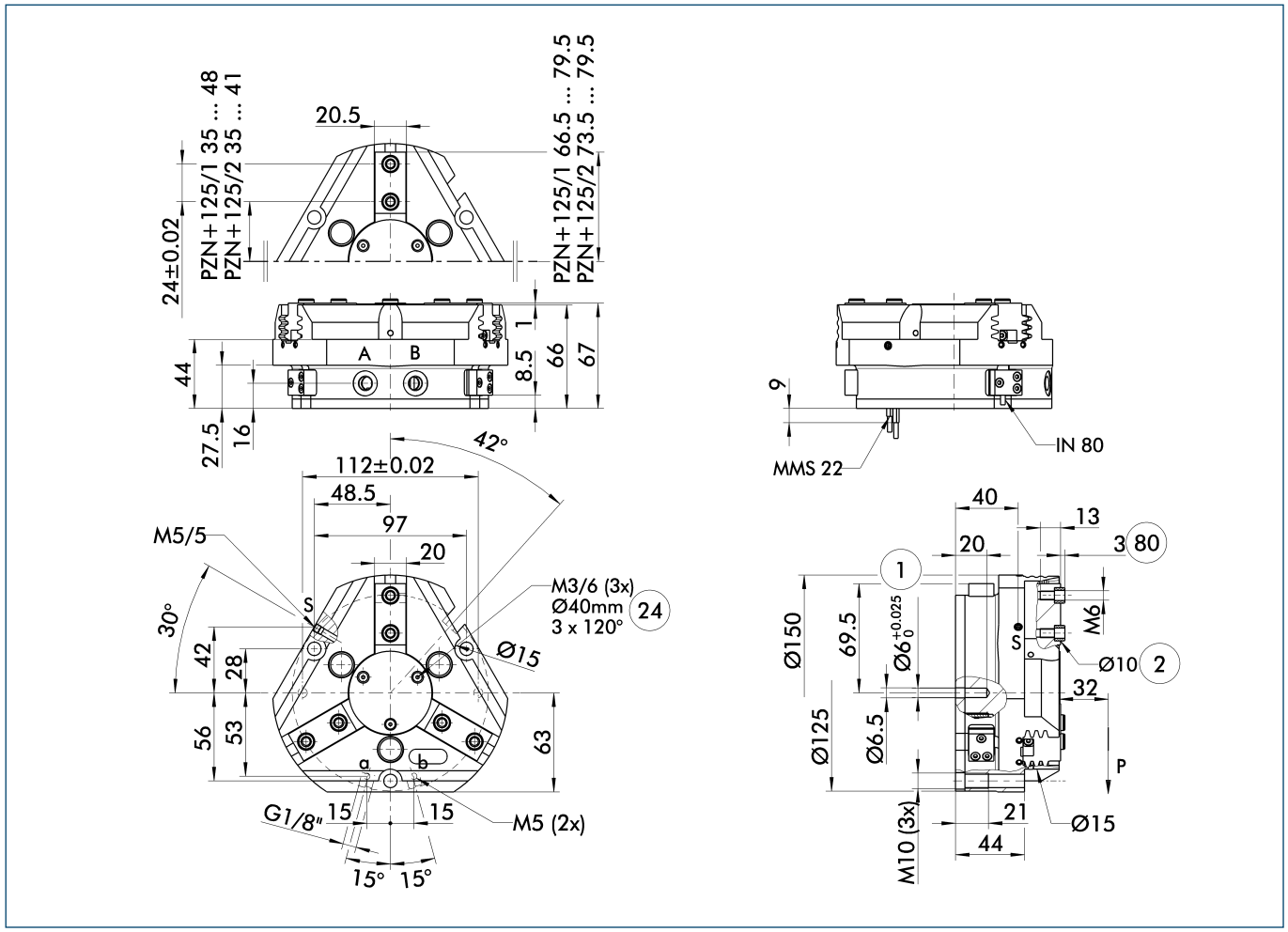


The drawing shows the gripper in the basic version with closed jaws, the dimensions do not include the options described below.

ⓘ The SDV-P pressure maintenance valve can also be used for I.D. or O.D. gripping alternatively or in addition to the spring-loaded, mechanical gripping force maintenance device (see "Accessories" catalog section).

A, a Main/direct connection, gripper opening
B, b Main/direct connection, gripper closing
S Air purge connection
① Gripper connection
② Finger connection
㉔ Bolt circle
㉚ Depth of the centering sleeve hole in the matching part

## Hose-free direct connection

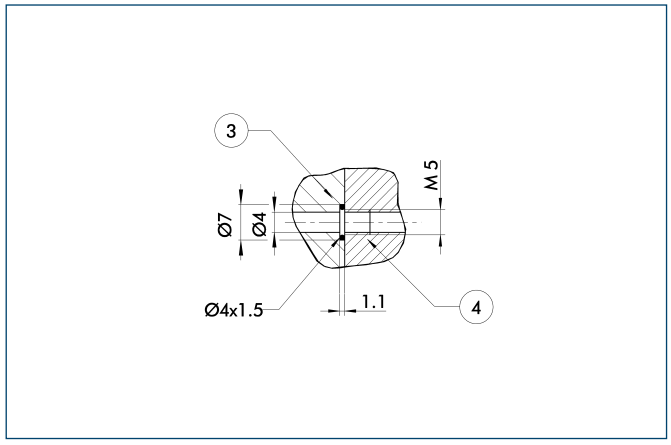


③ Adapter
④ Gripper

The direct connection is used for supplying compressed air without hoses. Instead, the pressure medium is fed through bore-holes in the mounting plate.

## AS/IS gripping force maintenance device

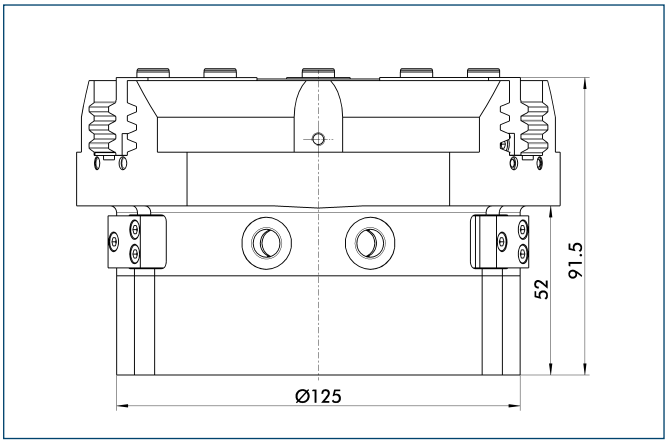


The mechanical gripping force maintenance device ensures a minimum gripping force even in case of pressure drop. This acts as closing force in the AS version, and as opening force in the IS version. In addition, the gripping force maintenance device can also be used for increasing the gripping force or for single-acting gripping.

## Dust-protection version

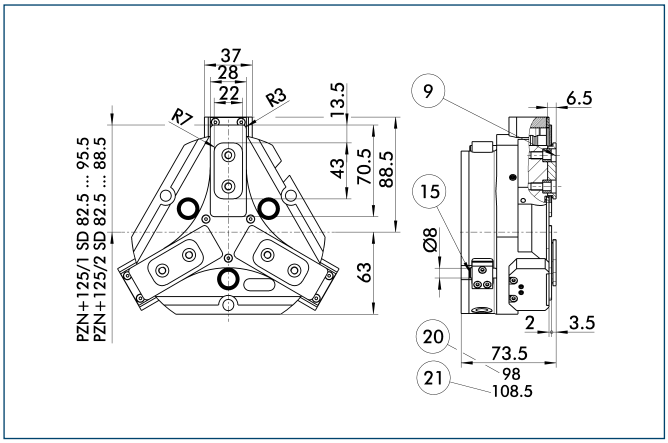


(9) For mounting screw connection diagram, see basic version
(15) Sealing bolt
(20) For AS / IS version
(21) Applies for KVZ version

The "dust-protection" option increases the degree of protection against penetrating substances. The screw connection diagram shifts by the height of the intermediate jaw. The finger length is still measured from the upper edge of the gripper housing.

## Force intensified version

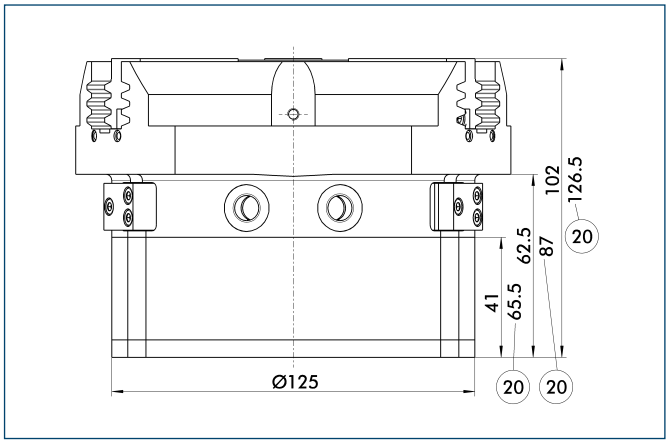


(20) For AS / IS version

The KVZ cylinder increases the gripping forces during opening and closing. A second, in series-connected piston also increases the force on the wedge hook. The full gripping force shown in the data table is sometimes only reached after a few hundred gripping cycles. Please consider that grippers which are equipped with a gripping force maintenance device (AS / IS) are higher.

## Precision version

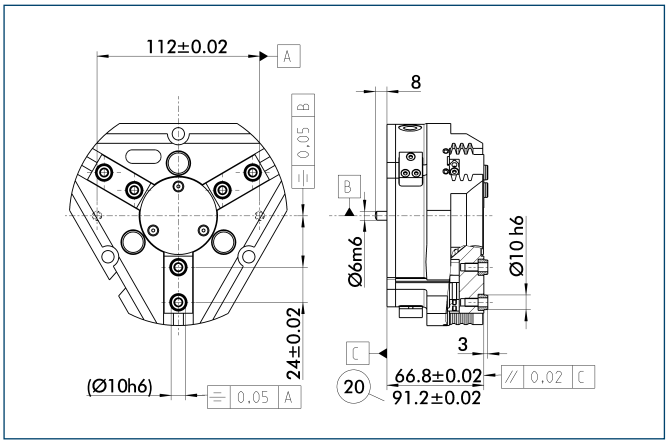


(20) For AS / IS version

The indicated tolerances just refer to the types of precision versions shown in the chart of technical specifications. All other types of precision versions are available on request.

## Spring-loaded pressure piece

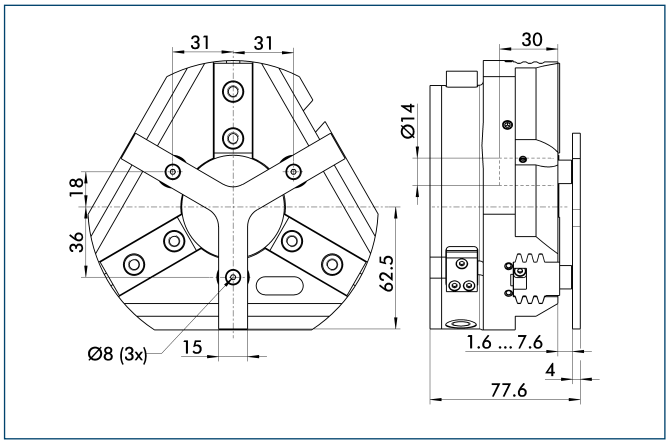


For spring-supported positioning of the workpiece against a stop after the gripper has opened. Especially developed for loading machines.

| Description | ID | Stroke | Min. force |
|---|---|---|---|
| Spring-loaded pressure piece | | | |
| A-PZN-plus/DPZ-plus 125 | **0303723** | 6 mm | 105 N |

ⓘ The pressure piece cannot be combined with the dust-protection version. Please contact us if you require a special pressure piece.

You can find more detailed information and individual parts of the above-mentioned accessories in the "Accessories" catalog section.

## Protection cover

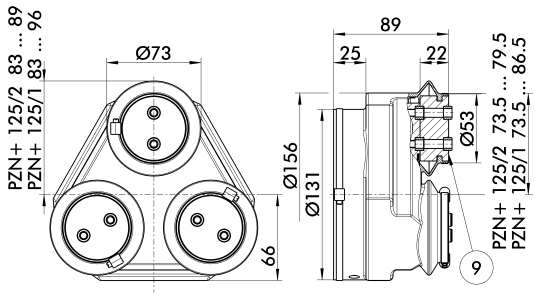


⑨ For mounting screw connection diagram, see basic version

The HUE protective cover completely protects the gripper against external influences up to IP65 if an additional sealing of the cover bottom is provided as part of the application. The mounting diagram shifts by the height of the intermediate jaw.

| Description | ID | Cleanroom class ISO-classification 14644-1 |
|---|---|---|
| Protection cover | | |
| HUE PZN-plus 125 | **0303483** | 2 |

## Quick-change Jaw System

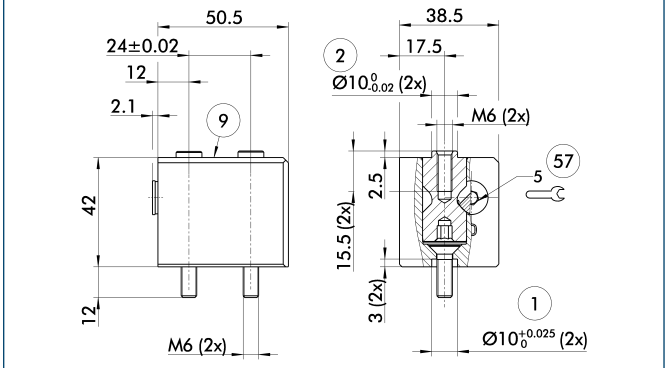


① Gripper connection
② Finger connection
⑨ For mounting screw connection diagram, see basic version
⑤⑦ Locking

The BSWS quick-change jaw system enables top jaws to be changed on the gripper manually and rapidly. An adapter (BSWS-A) and a base (BSWS-B) are required for each gripper jaw.
For a reverse assembly without height set-up, one adapter (BSWS-A) and a kit (BSWS-U) per gripper jaw are required. Another effect of the BSWS-U is, that there are no disturbing fastening bores in the finger contour.

| Description | ID |
|---|---|
| Quick-change Jaw System adapter | |
| BSWS-A 125 | **0303028** |
| Quick-change Jaw System base | |
| BSWS-B 125 | **0303029** |
| Quick-change Jaw System reversed | |
| BSWS-U 125 | **0303044** |

You can find more detailed information and individual parts of the above-mentioned accessories in the “Accessories” catalog section.

## Universal intermediate jaw

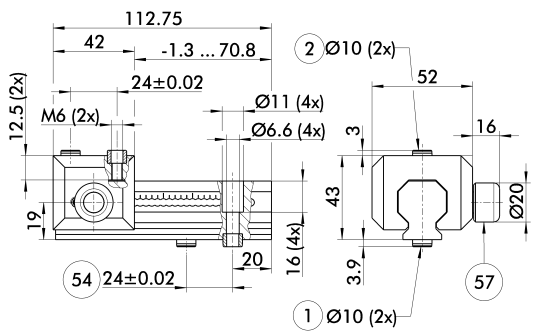


① Gripper connection
② Finger connection
54 Optional right or left connection
57 Locking

The universal intermediate jaw allows fast tool-free and reliable plugging and shifting of top jaws at the gripper.

| Description | ID | Grid dimension |
|---|---|---|
| Universal intermediate jaw | | |
| UZB 125 | **0300045** | 3 mm |
| UZB-S 125 | **5518273** | 3 mm |

ⓘ The slide UZB-S can be removed completely and has to be ordered separately. Moreover, it allows a fast jaw change.

## Force measuring jaws

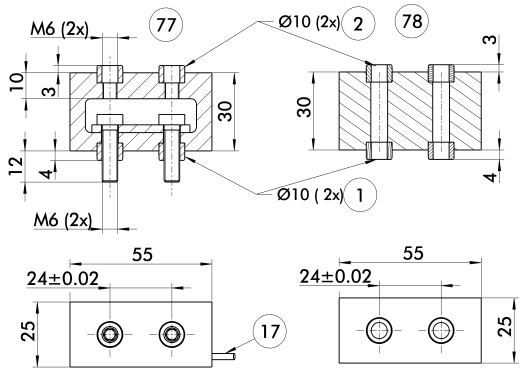


① Gripper connection
② Finger connection
17 Cable outlet
77 Active intermediate jaws
78 Passive intermediate jaws

Force measuring jaws measure gripping forces, but can also determine workpiece weights or dimensional deviations. There are active and passive intermediate jaws (FMS-ZBA or FMS-ZBP). At least one active force measuring jaw is required per gripper, the rest can be passive. For each active jaw, a FMS-A1 control unit and a FMS-A connection cable are required.

| Description | ID |
|---|---|
| Active intermediate jaws | |
| FMS-ZBA 125 | **0301838** |
| Passive intermediate jaws | |
| FMS-ZBP 125 | **0301839** |
| Electronic Processor | |
| FMS-A1 | **0301810** |
| Connection cables | |
| FMS-AK0200 | **0301820** |
| FMS-AK0500 | **0301821** |
| FMS-AK1000 | **0301822** |
| FMS-AK2000 | **0301823** |

## Finger blanks

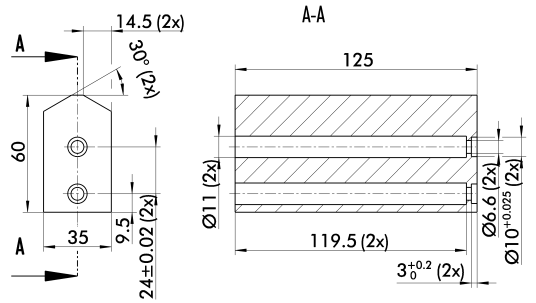


Finger blanks for customized subsequent machining

| Description | ID | Material | Scope of delivery |
|---|---|---|---|
| Finger blanks | | | |
| ABR-plus 125 | **0300013** | Aluminum | 1 |
| SBR-plus 125 | **0300023** | 16 MnCr 5 | 1 |

You can find more detailed information and individual parts of the above-mentioned accessories in the “Accessories” catalog section.

## Tolerance compensation unit

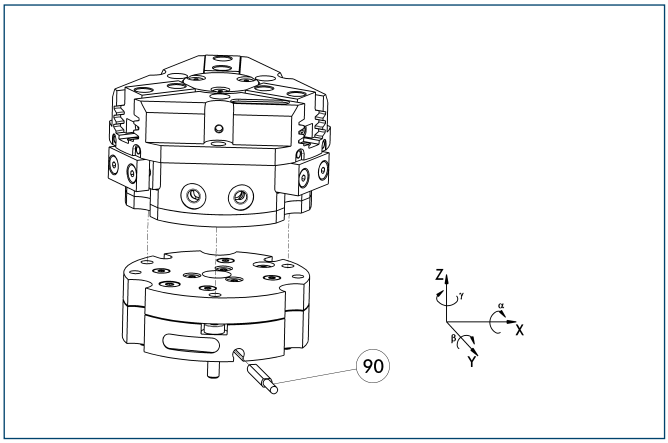


(90) Monitoring of locking

Grippers can be directly mounted without an adapter plate. Tolerance compensation unit and gripper have an identical screw connection diagram. Therefore the tolerance compensation units can be assembled later. Please consider the additional assembly height of the tolerance compensation unit. For details see catalog “Robot Accessories”.

| Description | ID | Locking | Deflection |
|---|---|---|---|
| Compensation unit | | | |
| TCU-125-3-MV-Z | **0324820** | Yes | |
| TCU-125-3-OV-Z | **0324821** | No | |

## Programmable magnetic switch

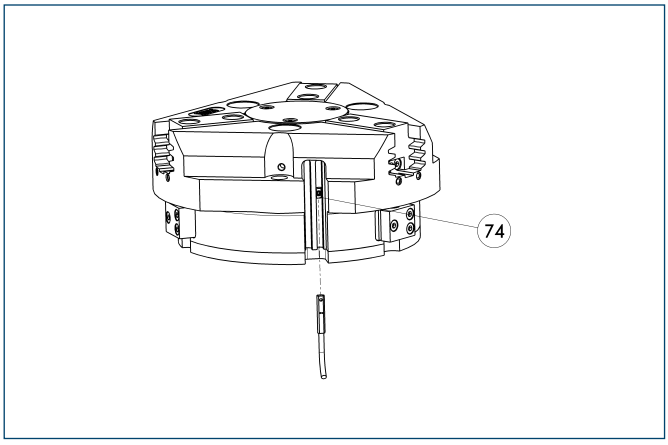


(74) Stop for MMS-P

Position monitoring with two programmable positions per sensor. The end position monitoring is mounted in the C-slot.

| Description | ID | Recommended product |
|---|---|---|
| Programmable magnetic switch | | |
| MMS-P 22-S-M8-PNP | **0301370** | • |
| MMSK-P 22-S-PNP | **0301371** | |
| Connection cables | | |
| KA BG08-L 4P-0500 | **0307767** | |
| KA BG08-L 4P-1000 | **0307768** | |
| KA BW08-L 4P-0500 | **0307765** | |
| KA BW08-L 4P-1000 | **0307766** | |
| Sensor Distributor | | |
| V2-M8-4P-2XM8-3P | **0301380** | |

ⓘ Please note the minimum permitted bending radii for the sensor cables, which are generally 35 mm.
ⓘ Per gripper one sensor (closer/NO) is required, optionally a cable extension.

## Compensation unit with spring reset

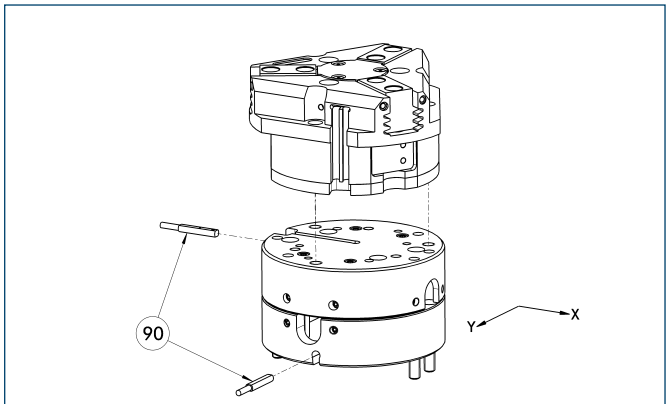


(90) Monitoring

Grippers can be directly mounted without using an adapter plate. For details see our catalog “Robot Accessories”.

| Description | ID | Compensation travel | Reset force |
|---|---|---|---|
| Compensation unit | | | |
| AGE-F-XY-080-1 | **0324960** | ±5 mm | 28.3 N |
| AGE-F-XY-080-2 | **0324961** | ±5 mm | 42.5 N |
| AGE-F-XY-080-3 | **0324962** | ±5 mm | 47.6 N |

## Electronic magnetic switches

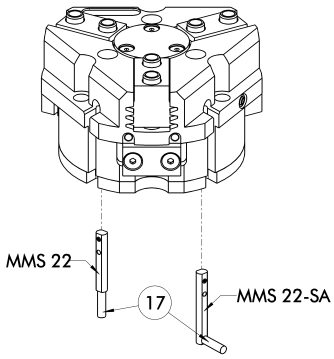


⑰ Cable outlet

End position monitoring for mounting in the C-slot

| Description | ID | Recommended product |
|---|---|---|
| Electronic magnetic switches | | |
| MMS 22-S-M5-PNP | 0301438 | |
| MMS 22-S-M5-NPN | 0301439 | |
| MMS 22-S-M8-PNP | 0301432 | • |
| MMS 22-S-M8-NPN | 0301433 | |
| MMSK 22-S-PNP | 0301434 | |
| MMSK 22-S-NPN | 0301435 | |
| Electronic magnetic switches with lateral cable outlet | | |
| MMS 22-S-M5-PNP-SA | 0301448 | |
| MMS 22-S-M5-NPN-SA | 0301449 | |
| MMS 22-S-M8-PNP-SA | 0301442 | • |
| MMS 22-S-M8-NPN-SA | 0301443 | |
| MMSK 22-S-PNP-SA | 0301444 | |
| MMSK 22-S-NPN-SA | 0301445 | |
| Reed Switches | | |
| RMS 22-S-M8 | 0377720 | • |
| Connection cables | | |
| KA BG05-L 3P-0300 | 0301652 | |
| KA BG08-L 3P-0300-PNP | 0301622 | |
| KA BG08-L 3P-0500-PNP | 0301623 | |
| KA BW05-L 3P-0300 | 0301650 | |
| KA BW08-L 3P-0300-NPN | 0301602 | |
| KA BW08-L 3P-0300-PNP | 0301594 | |
| KA BW08-L 3P-0500-NPN | 9641116 | |
| KA BW08-L 3P-0500-PNP | 0301502 | |
| Cable extensions | | |
| KV BW08-SG08 3P-0030-PNP | 0301495 | |
| KV BW08-SG08 3P-0100-PNP | 0301496 | |
| KV BW08-SG08 3P-0200-PNP | 0301497 | |

ⓘ Two sensors (closer/NO) are required for each gripper, plus extension cables as an option.

ⓘ Please note the minimum permitted bending radii for the sensor cables, which are generally 35 mm.

## Inductive proximity switches

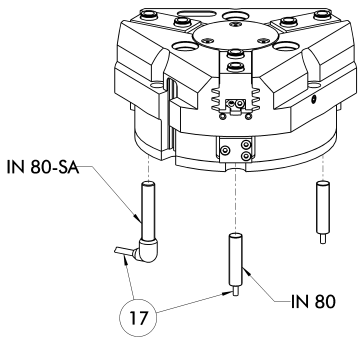


⑰ Cable outlet

End position monitoring for direct mounting

| Description | ID | Recommended product |
|---|---|---|
| Inductive proximity switches | | |
| IN 80-S-M8 | 0301478 | • |
| IN 80-S-M12 | 0301578 | |
| INK 80-S | 0301550 | |
| Inductive proximity switch with lateral outlet | | |
| IN 80-S-M12-SA | 0301587 | |
| IN 80-S-M8-SA | 0301483 | • |
| INK 80-S-SA | 0301566 | |
| Connection cables | | |
| KA BG08-L 3P-0300-PNP | 0301622 | |
| KA BG08-L 3P-0500-PNP | 0301623 | |
| KA BG12-L 3P-0500-PNP | 30016369 | |
| KA BW08-L 3P-0300-PNP | 0301594 | |
| KA BW08-L 3P-0500-PNP | 0301502 | |
| KA BW12-L 3P-0300-PNP | 0301503 | |
| KA BW12-L 3P-0500-PNP | 0301507 | |
| Cable extensions | | |
| KV BG12-SG12 3P-0030-PNP | 0301999 | |
| KV BG12-SG12 3P-0060-PNP | 0301998 | |
| KV BW08-SG08 3P-0030-PNP | 0301495 | |
| KV BW08-SG08 3P-0100-PNP | 0301496 | |
| KV BW08-SG08 3P-0200-PNP | 0301497 | |
| KV BW12-SG12 3P-0030-PNP | 0301595 | |
| KV BW12-SG12 3P-0100-PNP | 0301596 | |
| KV BW12-SG12 3P-0200-PNP | 0301597 | |

ⓘ Two sensors (closer/NO) are required for each gripper, plus extension cables as an option.

ⓘ Please note the minimum permitted bending radii for the sensor cables, which are generally 35 mm.

You can find more detailed information and individual parts of the above-mentioned accessories in the “Accessories” catalog section.

## Cylindrical Reed Switches

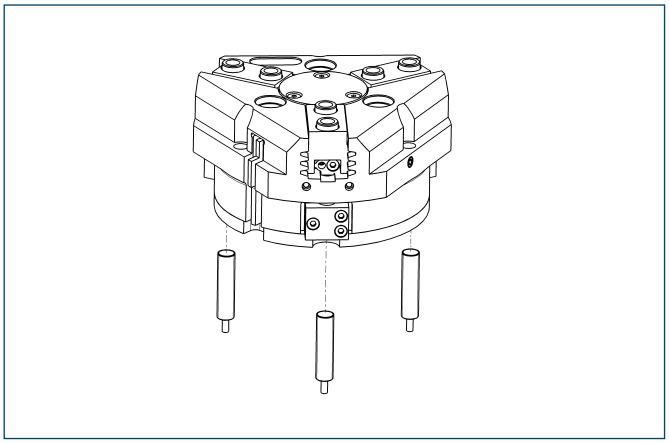

End position monitoring mounted with mounting kit

| Description | ID |
|---|---|
| Mounting kit for proximity switch | |
| AS-RMS 80 PGN/PZN-plus 100/125 | **0377726** |
| Reed Switches | |
| RMS 80-S-M8 | **0377721** |

ⓘ Two sensors (closer/NO) are required for each gripper, plus extension cables as an option.
ⓘ This mounting kit needs to be ordered optionally as an accessory.
ⓘ Please note the minimum permitted bending radii for the sensor cables, which are generally 35 mm.

## Analog position sensor

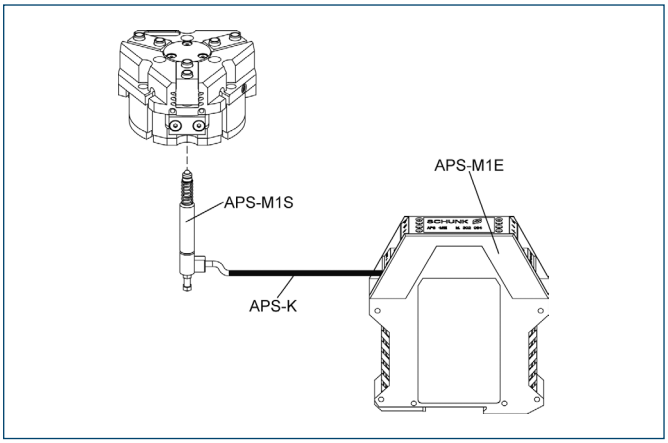


Analog multi position monitoring for any desired positions

| Description | ID |
|---|---|
| Mounting kit | |
| AS-APS-M1-125/1 | **0302081** |
| AS-APS-M1-125/2 | **0302082** |
| Connection cables | |
| APS-K0200 | **0302066** |
| APS-K0700 | **0302068** |
| Electronic Processor | |
| APS-M1E | **0302064** |
| Sensor | |
| APS-M1S | **0302062** |

ⓘ When using an APS system, for each gripper a mounting kit (AS-APS), an APS sensor (APS-M 1S, incl. 3 m cable) as well as an electronics (APS-M1e) are required.
ⓘ An extension cable (APS-K) can be connected between the sensor and the electronics as an option. The max. cable length between the sensor and the electronics is 10 m, between the electronics and their control unit (PLC) it is max. 1 m.

You can find more detailed information and individual parts of the above-mentioned accessories in the “Accessories” catalog section.

## Flexible Position Sensor

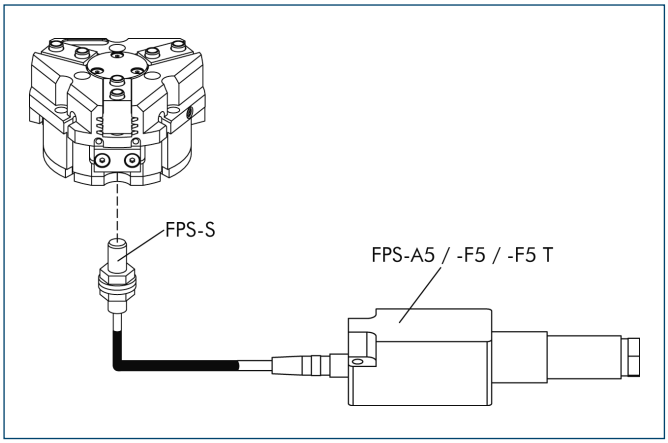


Flexible position monitoring of up to five positions

| Description | ID |
|---|---|
| Mounting kit for FPS | |
| AS-PGN/PZN-plus 125/1, PZB 160 | **0301636** |
| AS-PGN/PZN-plus 125/2 | **0301637** |
| Electronic Processor | |
| FPS-F5 | **0301805** |
| FPS-F5 T | **0301807** |
| Sensor | |
| FPS-S M8 | **0301704** |

ⓘ When using a FPS system, a FPS sensor (FPS-S) and a control unit (FPS-F5 / F5 T or A5) are required for each gripper as well as a mounting kit (AS), if listed. Cable extensions (KV) are available as options in the “Accessories” catalog section.

You can find more detailed information and individual parts of the above-mentioned accessories in the “Accessories” catalog section.

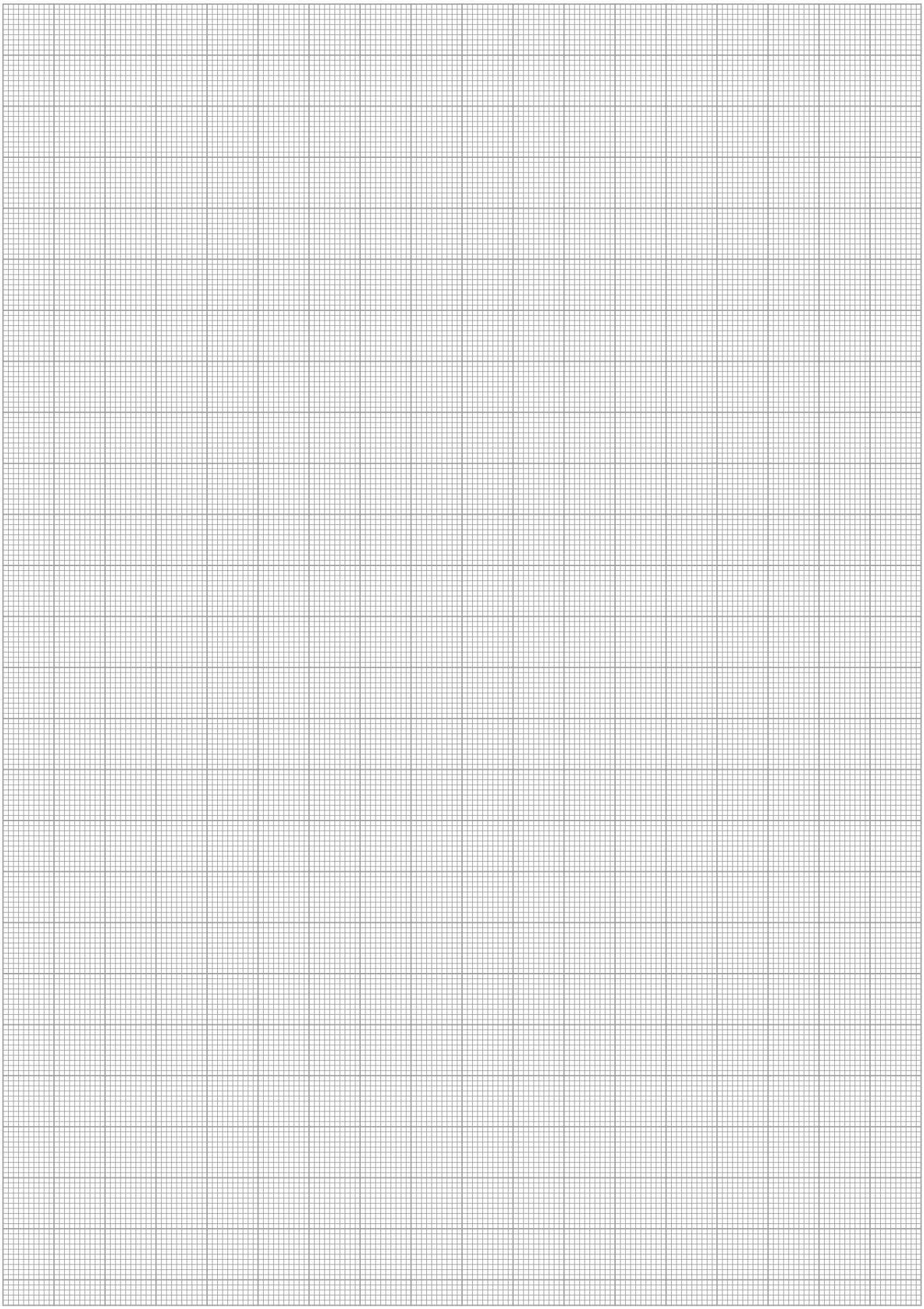

# PZN-plus 160

**Pneumatic • 3-Finger Centric Gripper • Universal Gripper**



## Gripping force, I.D. gripping

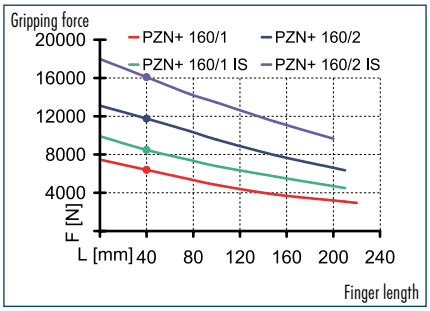


## Gripping force, O.D. gripping

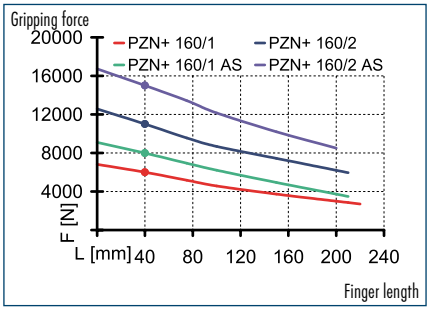


## Finger load

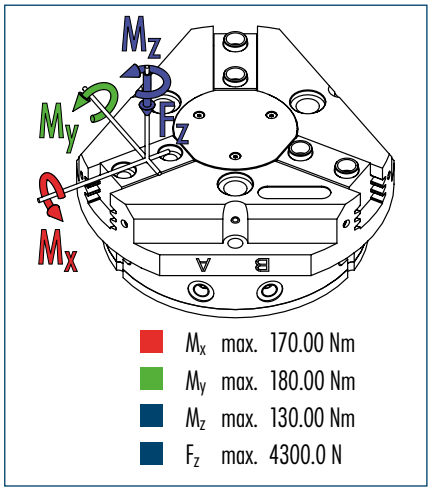


- $M_x$ max. 170.00 Nm
- $M_y$ max. 180.00 Nm
- $M_z$ max. 130.00 Nm
- $F_z$ max. 4300.0 N

ⓘ The indicated moments and forces are static values, apply per base jaw and may occur simultaneously. $M_y$ may arise in addition to the moment generated by the gripping force itself. If the max. permitted finger weight is exceeded, it is imperative to throttle the air pressure so that the jaw movement occurs without any hitting or bouncing. Service life may be reduced.

## Technical data

| Description | | PZN-plus 160-1 | PZN-plus 160-2 | PZN-plus 160-1-AS | PZN-plus 160-2-AS | PZN-plus 160-1-IS | PZN-plus 160-2-IS |
|---|---|---|---|---|---|---|---|
| **ID** | | **0303314** | **0303414** | **0303514** | **0303614** | **0303544** | **0303644** |
| Stroke per finger | [mm] | 16 | 8 | 16 | 8 | 16 | 8 |
| Closing force | [N] | 6000 | 11000 | 7990 | 15010 | | |
| Opening force | [N] | 6390 | 11750 | | | 8480 | 16090 |
| Min. spring force | [N] | | | 1990 | 4010 | 2090 | 4340 |
| Weight | [kg] | 5.6 | 5.6 | 8 | 8 | 8 | 8 |
| Recommended workpiece weight | [kg] | 30 | 55 | 30 | 55 | 30 | 55 |
| Air consumption per double stroke | [cm³] | 520 | 520 | 875 | 875 | 875 | 875 |
| Min./max. operating pressure | [bar] | 2/8 | 2/8 | 4/6.5 | 4/6.5 | 4/6.5 | 4/6.5 |
| Nominal operating pressure | [bar] | 6 | 6 | 6 | 6 | 6 | 6 |
| Closing/opening time | [s] | 0.5/0.5 | 0.5/0.5 | 0.4/0.8 | 0.4/0.8 | 0.8/0.4 | 0.8/0.4 |
| Max. permitted finger length | [mm] | 220 | 210 | 210 | 200 | 210 | 200 |
| Max. permitted weight per finger | [kg] | 3.5 | 3.5 | 3.5 | 3.5 | 3.5 | 3.5 |
| IP class | | 40 | 40 | 40 | 40 | 40 | 40 |
| Min./max. ambient temperature | [°C] | -10/90 | -10/90 | -10/90 | -10/90 | -10/90 | -10/90 |
| Repeat accuracy | [mm] | 0.02 | 0.02 | 0.02 | 0.02 | 0.02 | 0.02 |
| Cleanroom class ISO-classification 14644-1 | | 5 | 5 | 5 | 5 | 5 | 5 |
| **OPTIONS and their characteristics** | | | | | | | |
| Dust-protection version | | **37303314** | **37303414** | **37303514** | **37303614** | **37303544** | **37303644** |
| IP class | | 64 | 64 | 64 | 64 | 64 | 64 |
| Weight | [kg] | 6.5 | 6.5 | 8.9 | 8.9 | 8.9 | 8.9 |
| Anti-corrosion version | | **38303314** | **38303414** | **38303514** | **38303614** | **38303544** | **38303644** |
| High-temperature version | | **39303314** | **39303414** | **39303514** | **39303614** | **39303544** | **39303644** |
| Min./max. ambient temperature | [°C] | -10/130 | -10/130 | -10/130 | -10/130 | -10/130 | -10/130 |
| Force intensified version | | PZN-plus 160-1-KVZ | PZN-plus 160-2-KVZ | PZN-plus 160-1-AS-KVZ | | PZN-plus 160-1-IS-KVZ | |
| ID | | **0372205** | **0372215** | **0372225** | | **0372245** | |
| Closing force | [N] | 10800 | 19800 | 12730 | | | |
| Opening force | [N] | 11500 | 21150 | | | 13590 | |
| Weight | [kg] | 7.8 | 7.8 | 9.6 | | 9.6 | |
| Maximum pressure | [bar] | 8 | 8 | 6 | | 6 | |
| Max. permitted finger length | [mm] | 125 | 100 | 100 | | 100 | |
| Precision version | | **0303344** | **0303444** | **0303494** | **0303594** | | |

## Main view

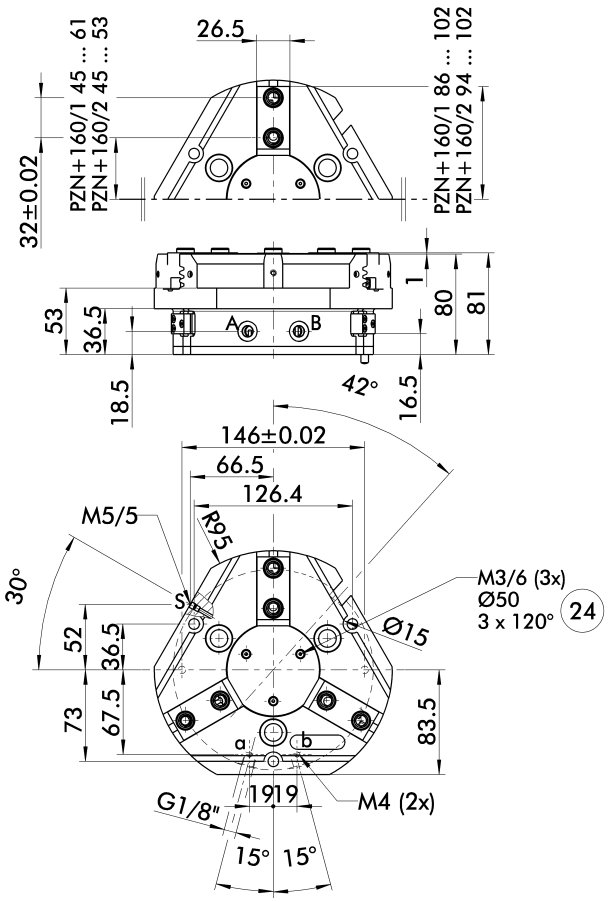


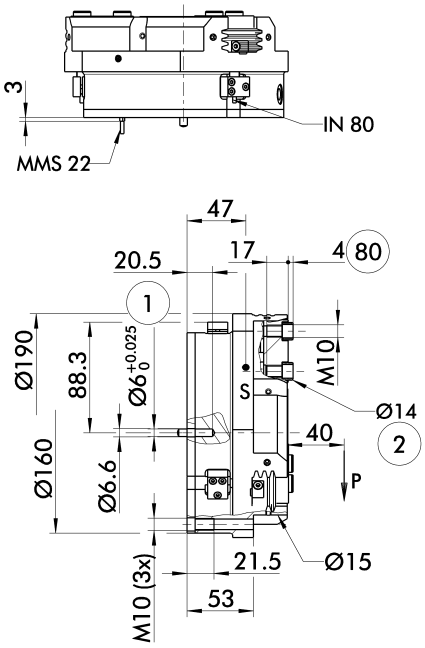


The drawing shows the gripper in the basic version with closed jaws, the dimensions do not include the options described below.

ⓘ The SDV-P pressure maintenance valve can also be used for I.D. or O.D. gripping alternatively or in addition to the spring-loaded, mechanical gripping force maintenance device (see "Accessories" catalog section).

A, a Main/direct connection, gripper opening
B, b Main/direct connection, gripper closing
S Air purge connection
① Gripper connection
② Finger connection
㉔ Bolt circle
㊽ Depth of the centering sleeve hole in the matching part

## Hose-free direct connection

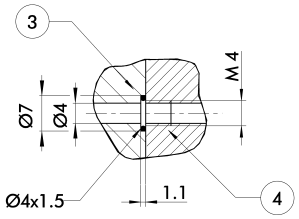


③ Adapter
④ Gripper

The direct connection is used for supplying compressed air without hoses. Instead, the pressure medium is fed through bore-holes in the mounting plate.

## AS/IS gripping force maintenance device

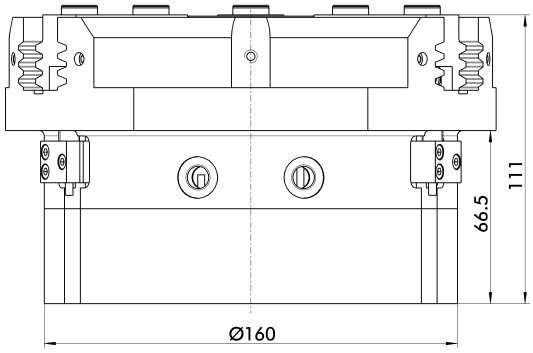


The mechanical gripping force maintenance device ensures a minimum gripping force even in case of pressure drop. This acts as closing force in the AS version, and as opening force in the IS version. In addition, the gripping force maintenance device can also be used for increasing the gripping force or for single-acting gripping.

## Dust-protection version

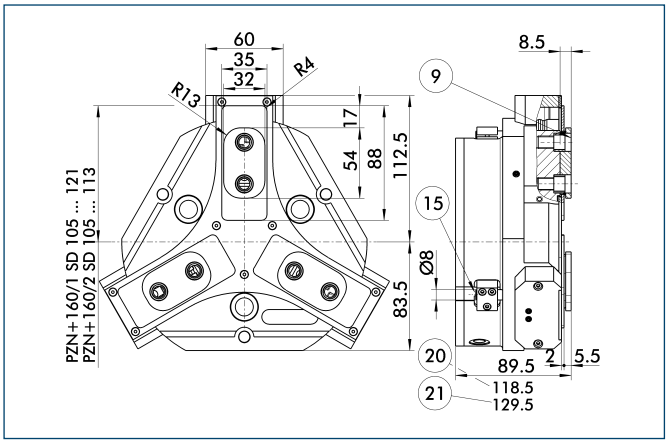


⑨ For mounting screw connection diagram, see basic version
⑮ Sealing bolt
⑳ For AS / IS version
㉑ Applies for KVZ version

The "dust-protection" option increases the degree of protection against penetrating substances. The screw connection diagram shifts by the height of the intermediate jaw. The finger length is still measured from the upper edge of the gripper housing.

## Force intensified version

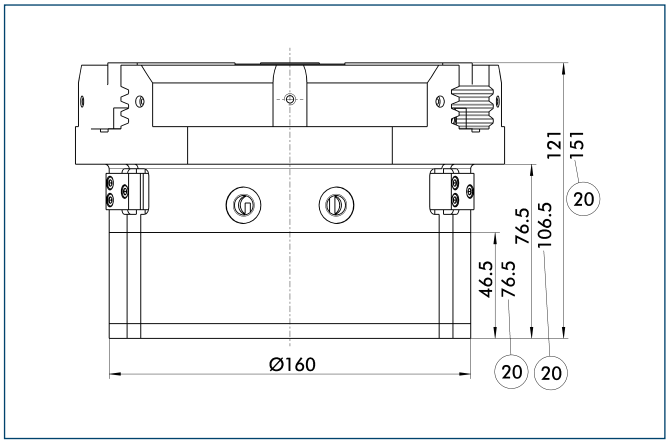


⑳ For AS / IS version

The KVZ cylinder increases the gripping forces during opening and closing. A second, in series-connected piston also increases the force on the wedge hook. The full gripping force shown in the data table is sometimes only reached after a few hundred gripping cycles. Please consider that grippers which are equipped with a gripping force maintenance device (AS / IS) are higher.

## Precision version

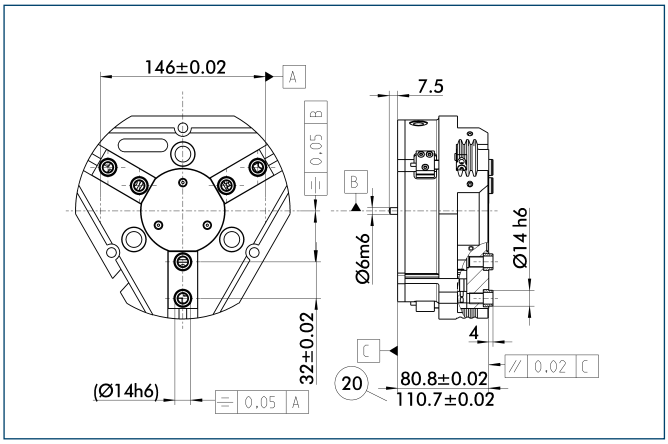


⑳ For AS / IS version

The indicated tolerances just refer to the types of precision versions shown in the chart of technical specifications. All other types of precision versions are available on request.

## Spring-loaded pressure piece

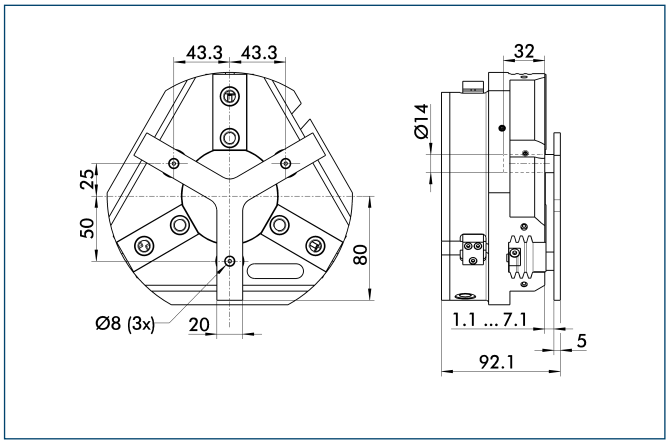


For spring-supported positioning of the workpiece against a stop after the gripper has opened. Especially developed for loading machines.

| Description | ID | Stroke | Min. force |
|---|---|---|---|
| Spring-loaded pressure piece | | | |
| A-PZN-plus/DPZ-plus 160 | **0303724** | 6 mm | 205 N |

ⓘ The pressure piece cannot be combined with the dust-protection version. Please contact us if you require a special pressure piece.

You can find more detailed information and individual parts of the above-mentioned accessories in the "Accessories" catalog section.

## Protection cover

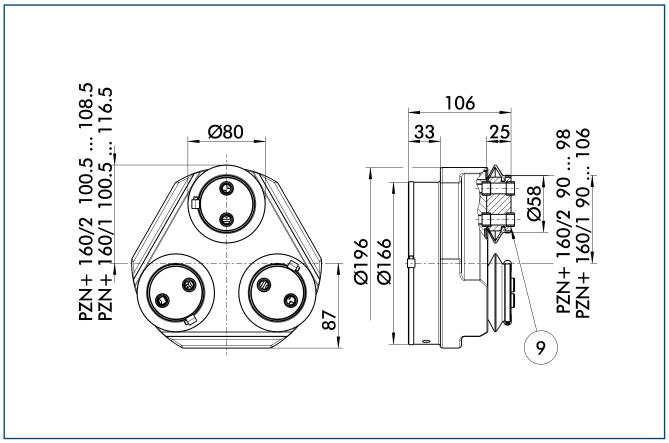


⑨ For mounting screw connection diagram, see basic version

The HUE protective cover completely protects the gripper against external influences up to IP65 if an additional sealing of the cover bottom is provided as part of the application. The mounting diagram shifts by the height of the intermediate jaw.

| Description | ID | Cleanroom class ISO-classification 14644-1 |
|---|---|---|
| Protection cover | | |
| HUE PZN-plus 160 | **0303484** | 2 |

## Quick-change Jaw System

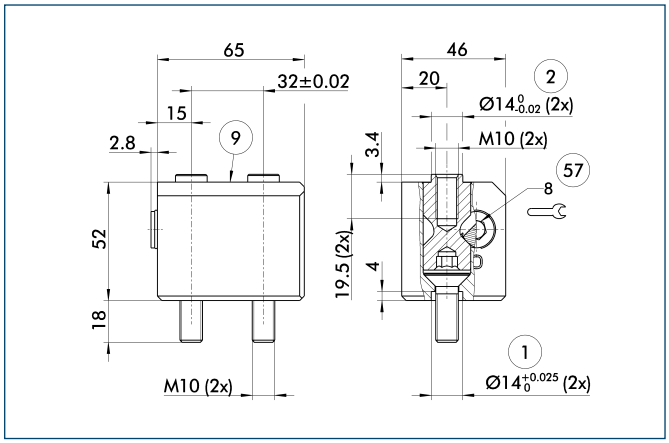


① Gripper connection
② Finger connection
⑨ For mounting screw connection diagram, see basic version
57 Locking

The BSWS quick-change jaw system enables top jaws to be changed on the gripper manually and rapidly. An adapter (BSWS-A) and a base (BSWS-B) are required for each gripper jaw.
For a reverse assembly without height set-up, one adapter (BSWS-A) and a kit (BSWS-U) per gripper jaw are required. Another effect of the BSWS-U is, that there are no disturbing fastening bores in the finger contour.

| Description | ID |
|---|---|
| Quick-change Jaw System adapter | |
| BSWS-A 160 | **0303030** |
| Quick-change Jaw System base | |
| BSWS-B 160 | **0303031** |
| Quick-change Jaw System reversed | |
| BSWS-U 160 | **0303045** |

You can find more detailed information and individual parts of the above-mentioned accessories in the “Accessories” catalog section.

## Universal intermediate jaw

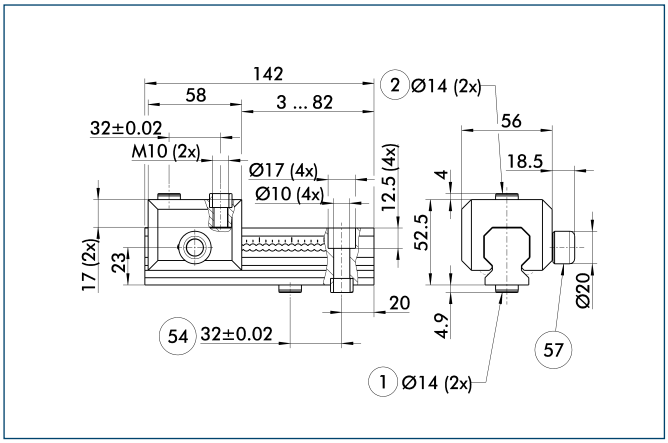


① Gripper connection
② Finger connection
54 Optional right or left connection
57 Locking

The universal intermediate jaw allows fast tool-free and reliable plugging and shifting of top jaws at the gripper.

| Description | ID | Grid dimension |
|---|---|---|
| Universal intermediate jaw | | |
| UZB 160 | **0300046** | 4 mm |
| UZB-S 160 | **5518274** | 4 mm |

ⓘ The slide UZB-S can be removed completely and has to be ordered separately. Moreover, it allows a fast jaw change.

## Force measuring jaws

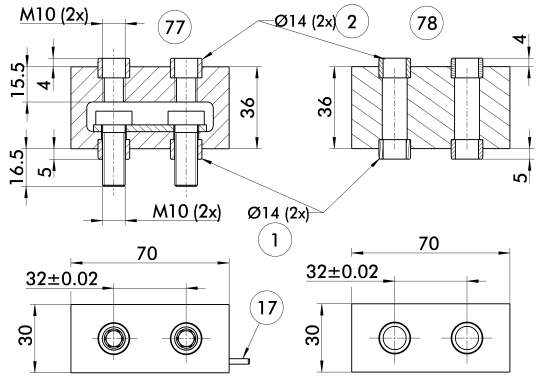


① Gripper connection
② Finger connection
17 Cable outlet
77 Active intermediate jaws
78 Passive intermediate jaws

Force measuring jaws measure gripping forces, but can also determine workpiece weights or dimensional deviations. There are active and passive intermediate jaws (FMS-ZBA or FMS-ZBP). At least one active force measuring jaw is required per gripper, the rest can be passive. For each active jaw, a FMS-A1 control unit and a FMS-A connection cable are required.

| Description | ID |
|---|---|
| Active intermediate jaws | |
| FMS-ZBA 160 | **0301840** |
| Passive intermediate jaws | |
| FMS-ZBP 160 | **0301841** |
| Electronic Processor | |
| FMS-A2 | **0301811** |
| Connection cables | |
| FMS-AK0200 | **0301820** |
| FMS-AK0500 | **0301821** |
| FMS-AK1000 | **0301822** |
| FMS-AK2000 | **0301823** |

## Finger blanks

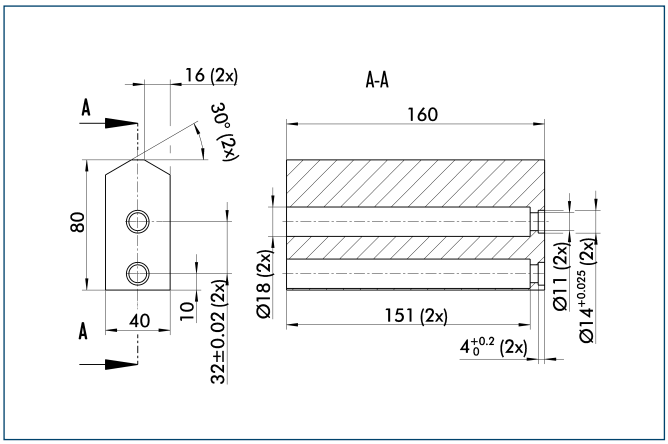


Finger blanks for customized subsequent machining

| Description | ID | Material | Scope of delivery |
|---|---|---|---|
| Finger blanks | | | |
| ABR-plus 160 | **0300014** | Aluminum | 1 |
| SBR-plus 160 | **0300024** | 16 MnCr 5 | 1 |

You can find more detailed information and individual parts of the above-mentioned accessories in the “Accessories” catalog section.

## Tolerance compensation unit

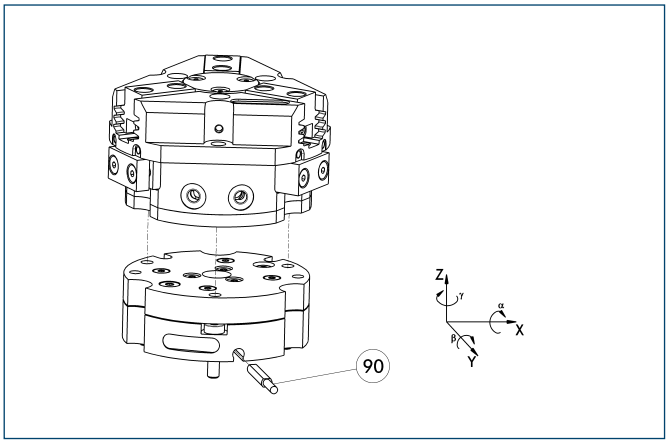


(90) Monitoring of locking

Grippers can be directly mounted without an adapter plate. Tolerance compensation unit and gripper have an identical screw connection diagram. Therefore the tolerance compensation units can be assembled later. Please consider the additional assembly height of the tolerance compensation unit. For details see catalog “Robot Accessories”.

| Description | ID | Locking | Deflection |
|---|---|---|---|
| Compensation unit | | | |
| TCU-160-3-MV-Z | **0324838** | Yes | |
| TCU-160-3-OV-Z | **0324839** | No | |

## Programmable magnetic switch

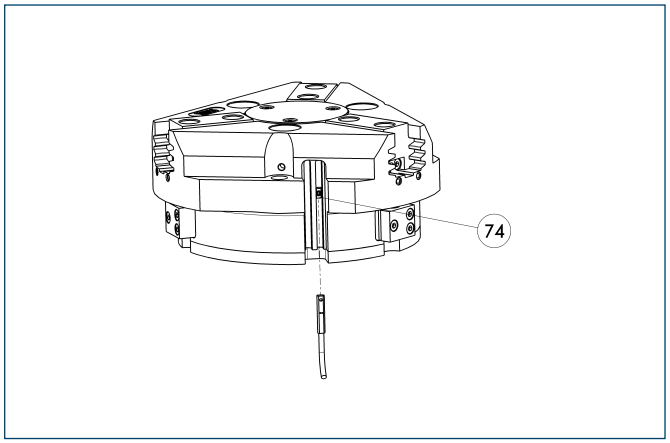


(74) Stop for MMS-P

Position monitoring with two programmable positions per sensor. The end position monitoring is mounted in the C-slot.

| Description | ID | Recommended product |
|---|---|---|
| Programmable magnetic switch | | |
| MMS-P 22-S-M8-PNP | **0301370** | • |
| MMSK-P 22-S-PNP | **0301371** | |
| Connection cables | | |
| KA BG08-L 4P-0500 | **0307767** | |
| KA BG08-L 4P-1000 | **0307768** | |
| KA BW08-L 4P-0500 | **0307765** | |
| KA BW08-L 4P-1000 | **0307766** | |
| Sensor Distributor | | |
| V2-M8-4P-2XM8-3P | **0301380** | |

ⓘ Please note the minimum permitted bending radii for the sensor cables, which are generally 35 mm.
ⓘ Per gripper one sensor (closer/NO) is required, optionally a cable extension.

You can find more detailed information and individual parts of the above-mentioned accessories in the “Accessories” catalog section.

## Electronic magnetic switches

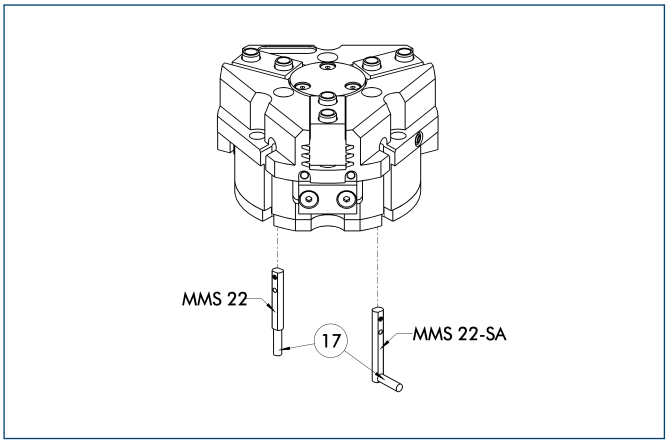


⑰ Cable outlet

End position monitoring for mounting in the C-slot

| Description | ID | Recommended product |
|---|---|---|
| Electronic magnetic switches | | |
| MMS 22-S-M5-PNP | 0301438 | |
| MMS 22-S-M5-NPN | 0301439 | |
| MMS 22-S-M8-PNP | 0301432 | • |
| MMS 22-S-M8-NPN | 0301433 | |
| MMSK 22-S-PNP | 0301434 | |
| MMSK 22-S-NPN | 0301435 | |
| Electronic magnetic switches with lateral cable outlet | | |
| MMS 22-S-M5-PNP-SA | 0301448 | |
| MMS 22-S-M5-NPN-SA | 0301449 | |
| MMS 22-S-M8-PNP-SA | 0301442 | • |
| MMS 22-S-M8-NPN-SA | 0301443 | |
| MMSK 22-S-PNP-SA | 0301444 | |
| MMSK 22-S-NPN-SA | 0301445 | |
| Reed Switches | | |
| RMS 22-S-M8 | 0377720 | • |
| Connection cables | | |
| KA BG05-L 3P-0300 | 0301652 | |
| KA BG08-L 3P-0300-PNP | 0301622 | |
| KA BG08-L 3P-0500-PNP | 0301623 | |
| KA BW05-L 3P-0300 | 0301650 | |
| KA BW08-L 3P-0300-NPN | 0301602 | |
| KA BW08-L 3P-0300-PNP | 0301594 | |
| KA BW08-L 3P-0500-NPN | 9641116 | |
| KA BW08-L 3P-0500-PNP | 0301502 | |
| Cable extensions | | |
| KV BW08-SG08 3P-0030-PNP | 0301495 | |
| KV BW08-SG08 3P-0100-PNP | 0301496 | |
| KV BW08-SG08 3P-0200-PNP | 0301497 | |

ⓘ Two sensors (closer/NO) are required for each gripper, plus extension cables as an option.

ⓘ Please note the minimum permitted bending radii for the sensor cables, which are generally 35 mm.

## Inductive proximity switches

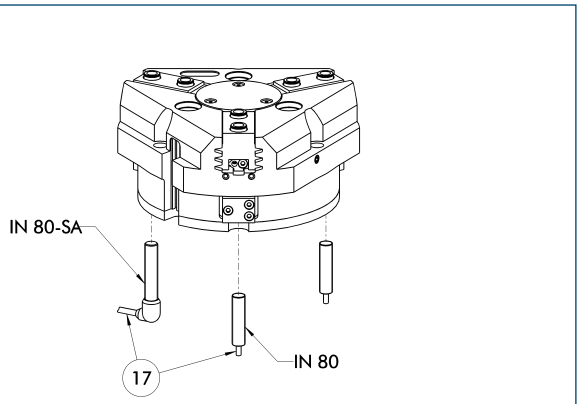


⑰ Cable outlet

End position monitoring for direct mounting

| Description | ID | Recommended product |
|---|---|---|
| Inductive proximity switches | | |
| IN 80-S-M8 | 0301478 | • |
| IN 80-S-M12 | 0301578 | |
| INK 80-S | 0301550 | |
| Inductive proximity switch with lateral outlet | | |
| IN 80-S-M12-SA | 0301587 | |
| IN 80-S-M8-SA | 0301483 | • |
| INK 80-S-SA | 0301566 | |
| Connection cables | | |
| KA BG08-L 3P-0300-PNP | 0301622 | |
| KA BG08-L 3P-0500-PNP | 0301623 | |
| KA BG12-L 3P-0500-PNP | 30016369 | |
| KA BW08-L 3P-0300-PNP | 0301594 | |
| KA BW08-L 3P-0500-PNP | 0301502 | |
| KA BW12-L 3P-0300-PNP | 0301503 | |
| KA BW12-L 3P-0500-PNP | 0301507 | |
| Cable extensions | | |
| KV BG12-SG12 3P-0030-PNP | 0301999 | |
| KV BG12-SG12 3P-0060-PNP | 0301998 | |
| KV BW08-SG08 3P-0030-PNP | 0301495 | |
| KV BW08-SG08 3P-0100-PNP | 0301496 | |
| KV BW08-SG08 3P-0200-PNP | 0301497 | |
| KV BW12-SG12 3P-0030-PNP | 0301595 | |
| KV BW12-SG12 3P-0100-PNP | 0301596 | |
| KV BW12-SG12 3P-0200-PNP | 0301597 | |

ⓘ Two sensors (closer/NO) are required for each gripper, plus extension cables as an option.

ⓘ Please note the minimum permitted bending radii for the sensor cables, which are generally 35 mm.

You can find more detailed information and individual parts of the above-mentioned accessories in the “Accessories” catalog section.

## Cylindrical Reed Switches

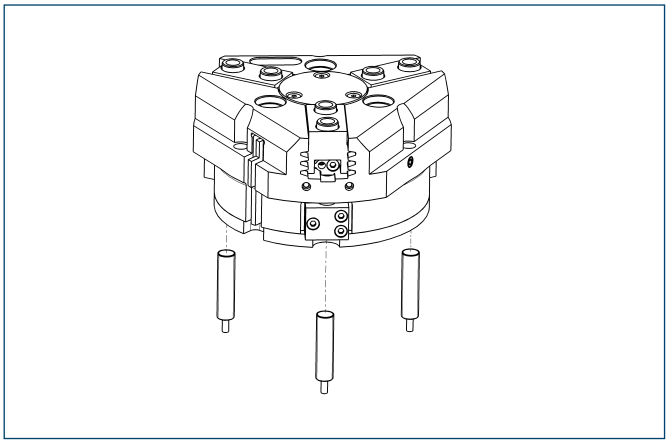

End position monitoring mounted with mounting kit

| Description | ID |
|---|---|
| Mounting kit for proximity switch | |
| AS-RMS 80 PGN/PZN-plus 160-380 | **0377727** |
| Reed Switches | |
| RMS 80-S-M8 | **0377721** |

ⓘ Two sensors (closer/NO) are required for each gripper, plus extension cables as an option.
ⓘ This mounting kit needs to be ordered optionally as an accessory.
ⓘ Please note the minimum permitted bending radii for the sensor cables, which are generally 35 mm.

## Analog position sensor

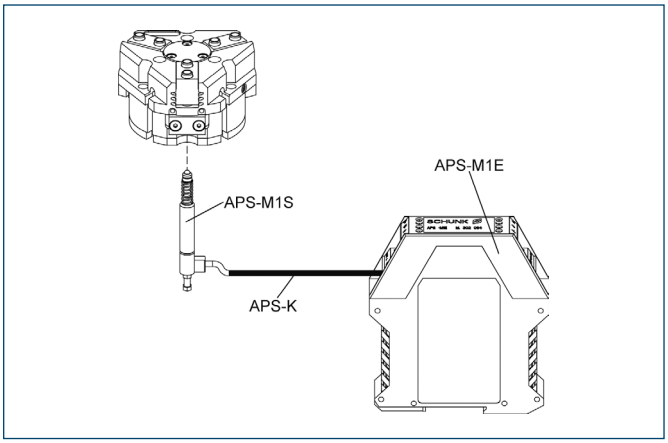


Analog multi position monitoring for any desired positions

| Description | ID |
|---|---|
| Mounting kit | |
| AS-APS-M1-160/1 and 240/2 | **0302083** |
| AS-APS-M1-160/2 | **0302084** |
| Connection cables | |
| APS-K0200 | **0302066** |
| APS-K0700 | **0302068** |
| Electronic Processor | |
| APS-M1E | **0302064** |
| Sensor | |
| APS-M1S | **0302062** |

ⓘ When using an APS system, for each gripper a mounting kit (AS-APS), an APS sensor (APS-M 1S, incl. 3 m cable) as well as an electronics (APS-M1e) are required.
ⓘ An extension cable (APS-K) can be connected between the sensor and the electronics as an option. The max. cable length between the sensor and the electronics is 10 m, between the electronics and their control unit (PLC) it is max. 1 m.

You can find more detailed information and individual parts of the above-mentioned accessories in the “Accessories” catalog section.

## Flexible Position Sensor

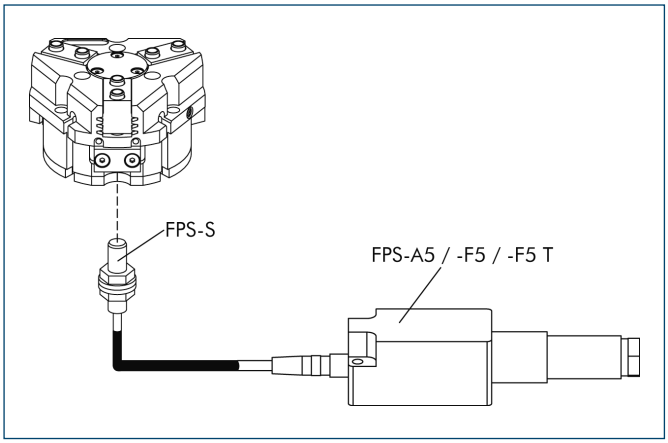


Flexible position monitoring of up to five positions

| Description | ID |
|---|---|
| Mounting kit for FPS | |
| AS-PGN/PZN-plus 160/1 | **0301638** |
| AS-PGN/PZN-plus 160/2 | **0301639** |
| Electronic Processor | |
| FPS-F5 | **0301805** |
| FPS-F5 T | **0301807** |
| Sensor | |
| FPS-S M8 | **0301704** |

ⓘ When using a FPS system, a FPS sensor (FPS-S) and a control unit (FPS-F5 / F5 T or A5) are required for each gripper as well as a mounting kit (AS), if listed. Cable extensions (KV) are available as options in the “Accessories” catalog section.

You can find more detailed information and individual parts of the above-mentioned accessories in the “Accessories” catalog section.

# PZN-plus 200

**Pneumatic • 3-Finger Centric Gripper • Universal Gripper**



## Gripping force, I.D. gripping

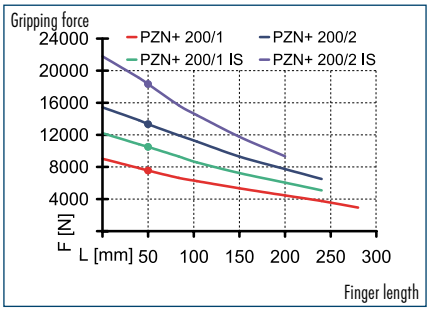


## Gripping force, O.D. gripping

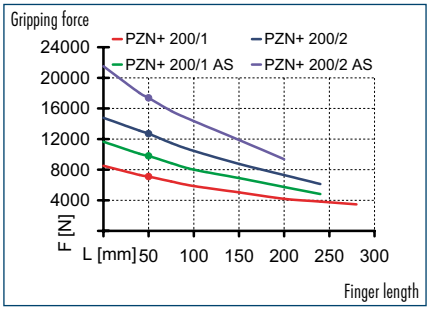


## Finger load

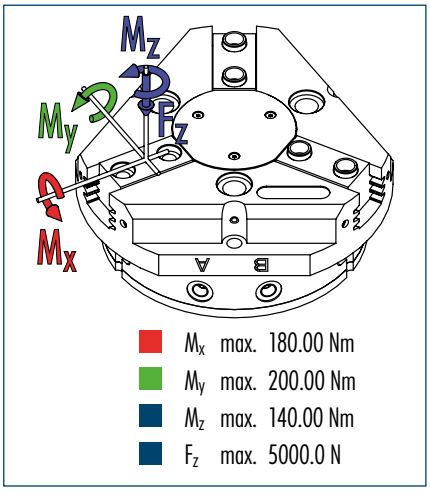


ⓘ The indicated moments and forces are static values, apply per base jaw and may occur simultaneously. $M_y$ may arise in addition to the moment generated by the gripping force itself. If the max. permitted finger weight is exceeded, it is imperative to throttle the air pressure so that the jaw movement occurs without any hitting or bouncing. Service life may be reduced.

## Technical data

| Description | | PZN-plus 200-1 | PZN-plus 200-2 | PZN-plus 200-1-AS | PZN-plus 200-2-AS | PZN-plus 200-1-IS | PZN-plus 200-2-IS |
|---|---|---|---|---|---|---|---|
| **ID** | | **0303315** | **0303415** | **0303515** | **0303615** | **0303545** | **0303645** |
| Stroke per finger | [mm] | 25 | 14 | 25 | 14 | 25 | 14 |
| Closing force | [N] | 7100 | 12700 | 9800 | 17380 | | |
| Opening force | [N] | 7540 | 13330 | | | 10500 | 18330 |
| Min. spring force | [N] | | | 2700 | 4680 | 2960 | 5000 |
| Weight | [kg] | 11 | 11 | 15.7 | 15.7 | 15.7 | 15.7 |
| Recommended workpiece weight | [kg] | 35.5 | 63.5 | 35.5 | 63.5 | 35.5 | 63.5 |
| Air consumption per double stroke | [cm³] | 1040 | 1040 | 1725 | 1725 | 1725 | 1725 |
| Min./max. operating pressure | [bar] | 2/8 | 2/8 | 4/6.5 | 4/6.5 | 4/6.5 | 4/6.5 |
| Nominal operating pressure | [bar] | 6 | 6 | 6 | 6 | 6 | 6 |
| Closing/opening time | [s] | 1.2/1.2 | 1.2/1.2 | 1/1.5 | 1/1.5 | 1.5/1 | 1.5/1 |
| Max. permitted finger length | [mm] | 280 | 240 | 240 | 200 | 240 | 200 |
| Max. permitted weight per finger | [kg] | 6.5 | 6.5 | 6.5 | 6.5 | 6.5 | 6.5 |
| IP class | | 40 | 40 | 40 | 40 | 40 | 40 |
| Min./max. ambient temperature | [°C] | -10/90 | -10/90 | -10/90 | -10/90 | -10/90 | -10/90 |
| Repeat accuracy | [mm] | 0.05 | 0.05 | 0.05 | 0.05 | 0.05 | 0.05 |
| Cleanroom class ISO-classification 14644-1 | | 5 | 5 | 5 | 5 | 5 | 5 |
| **OPTIONS and their characteristics** | | | | | | | |
| Dust-protection version | | **37303315** | **37303415** | **37303515** | **37303615** | **37303545** | **37303645** |
| IP class | | 64 | 64 | 64 | 64 | 64 | 64 |
| Weight | [kg] | 12 | 12 | 16.7 | 16.7 | 16.7 | 16.7 |
| Anti-corrosion version | | **38303315** | **38303415** | **38303515** | **38303615** | **38303545** | **38303645** |
| High-temperature version | | **39303315** | **39303415** | **39303515** | **39303615** | **39303545** | **39303645** |
| Min./max. ambient temperature | [°C] | -10/130 | -10/130 | -10/130 | -10/130 | -10/130 | -10/130 |
| Precision version | | **0303345** | **0303445** | **0303495** | **0303595** | | |

## Main view

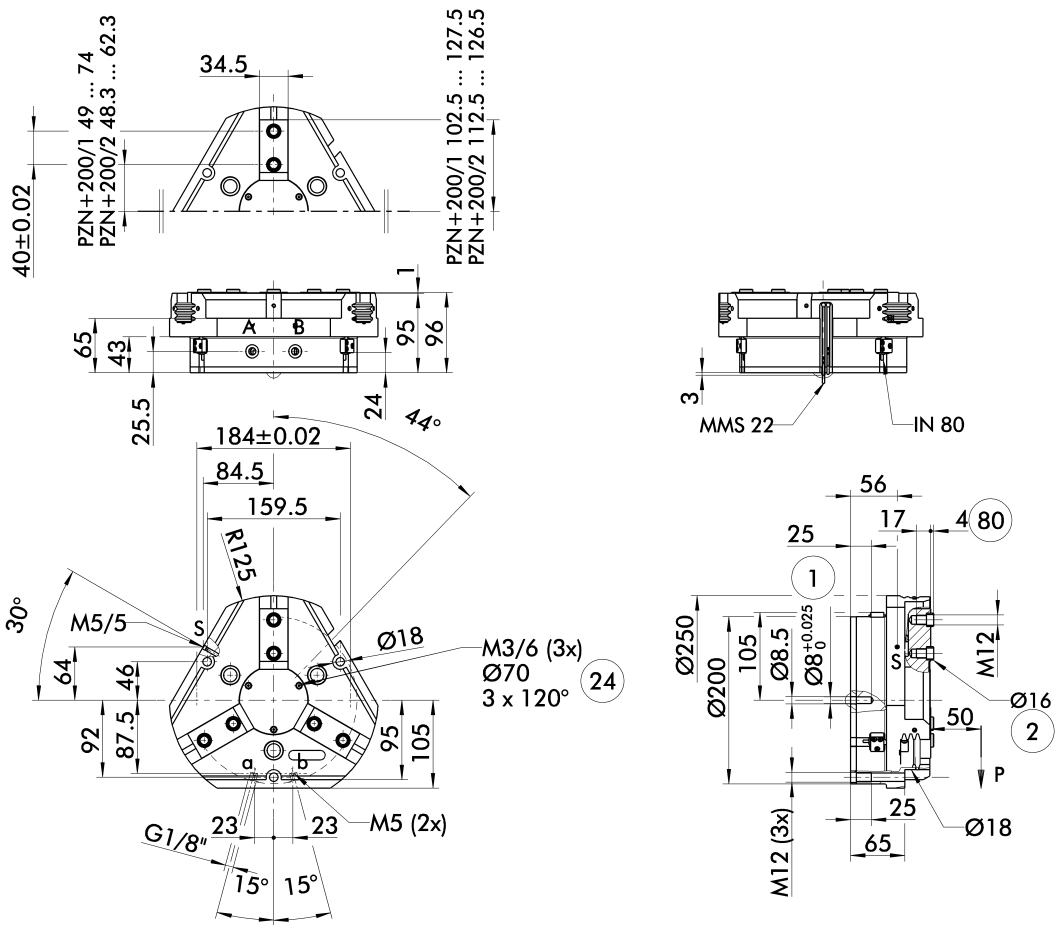


The drawing shows the gripper in the basic version with closed jaws, the dimensions do not include the options described below.

ⓘ The SDV-P pressure maintenance valve can also be used for I.D. or O.D. gripping alternatively or in addition to the spring-loaded, mechanical gripping force maintenance device (see "Accessories" catalog section).

A, a Main/direct connection, gripper opening
B, b Main/direct connection, gripper closing
S Air purge connection
① Gripper connection
② Finger connection
㉔ Bolt circle
㉚ Depth of the centering sleeve hole in the matching part

## Hose-free direct connection

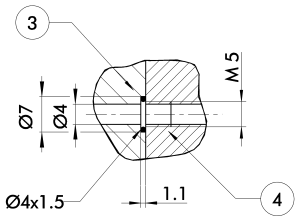


③ Adapter
④ Gripper

The direct connection is used for supplying compressed air without hoses. Instead, the pressure medium is fed through bore-holes in the mounting plate.

## AS/IS gripping force maintenance device

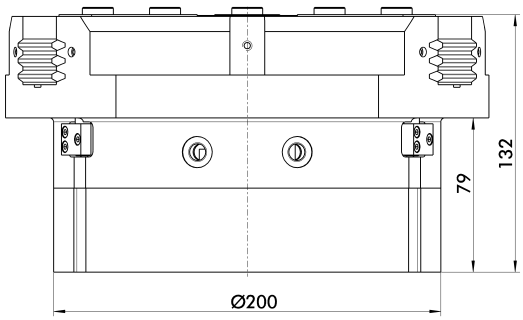


The mechanical gripping force maintenance device ensures a minimum gripping force even in case of pressure drop. This acts as closing force in the AS version, and as opening force in the IS version. In addition, the gripping force maintenance device can also be used for increasing the gripping force or for single-acting gripping.

## Dust-protection version

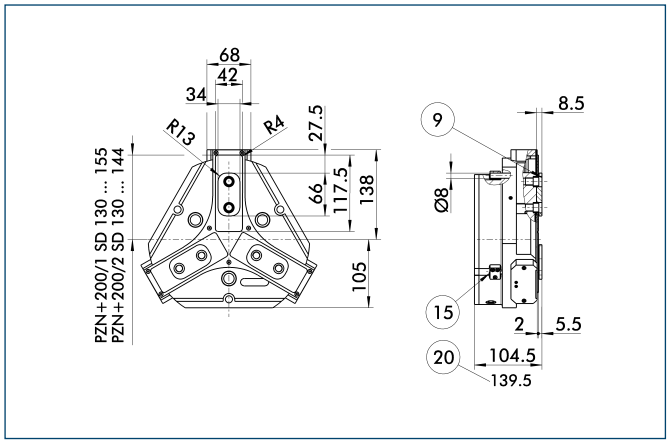


⑨ For mounting screw connection diagram, see basic version
⑮ Sealing bolt
⑳ For AS / IS version

The "dust-protection" option increases the degree of protection against penetrating substances. The screw connection diagram shifts by the height of the intermediate jaw. The finger length is still measured from the upper edge of the gripper housing.

## Precision version

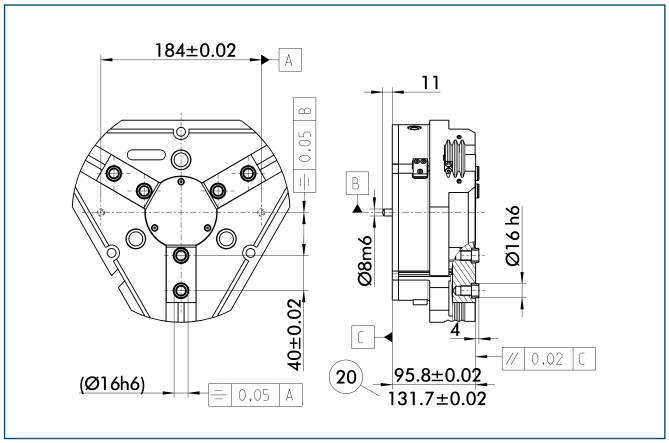


⑳ For AS / IS version

The indicated tolerances just refer to the types of precision versions shown in the chart of technical specifications. All other types of precision versions are available on request.

## Spring-loaded pressure piece

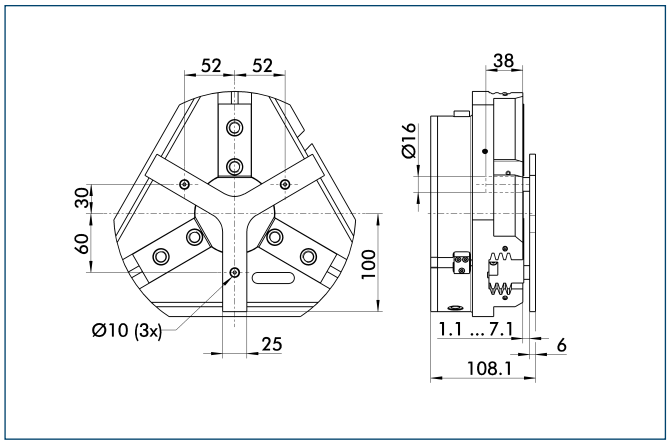


For spring-supported positioning of the workpiece against a stop after the gripper has opened. Especially developed for loading machines.

| Description | ID | Stroke | Min. force |
|---|---|---|---|
| Spring-loaded pressure piece | | | |
| A-PZN-plus/DPZ-plus 200 | **0303725** | 6 mm | 247 N |

ⓘ The pressure piece cannot be combined with the dust-protection version. Please contact us if you require a special pressure piece.

## Universal intermediate jaw

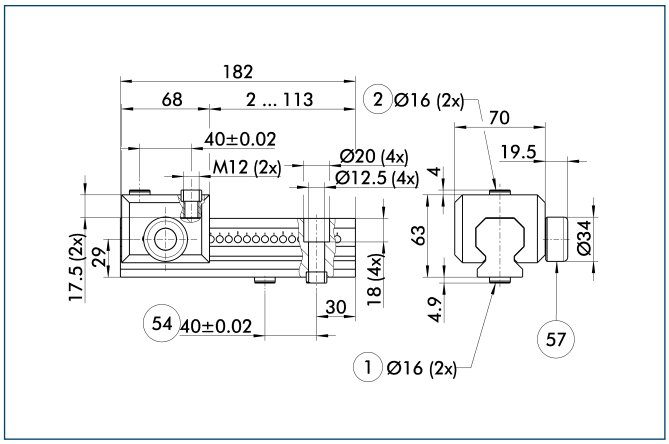


① Gripper connection
② Finger connection
⑤④ Optional right or left connection
⑤⑦ Locking

The universal intermediate jaw allows fast tool-free and reliable plugging and shifting of top jaws at the gripper.

| Description | ID | Grid dimension |
|---|---|---|
| Universal intermediate jaw | | |
| UZB 200 | **0300047** | 7 mm |
| UZB-S 200 | **5518275** | 7 mm |

ⓘ The slide UZB-S can be removed completely and has to be ordered separately. Moreover, it allows a fast jaw change.

You can find more detailed information and individual parts of the above-mentioned accessories in the "Accessories" catalog section.

## Force measuring jaws

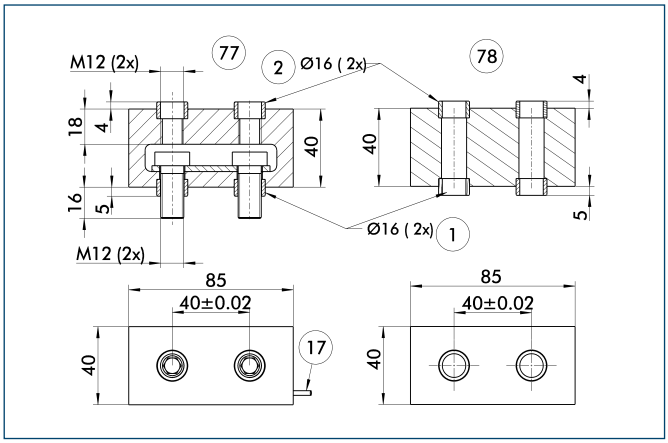


① Gripper connection
② Finger connection
⑰ Cable outlet
⑦⑦ Active intermediate jaws
⑦⑧ Passive intermediate jaws

Force measuring jaws measure gripping forces, but can also determine workpiece weights or dimensional deviations. There are active and passive intermediate jaws (FMS-ZBA or FMS-ZBP). At least one active force measuring jaw is required per gripper, the rest can be passive. For each active jaw, a FMS-A1 control unit and a FMS-A connection cable are required.

| Description | ID |
|---|---|
| Active intermediate jaws | |
| FMS-ZBA 200 | **0301842** |
| Passive intermediate jaws | |
| FMS-ZBP 200 | **0301843** |
| Electronic Processor | |
| FMS-A2 | **0301811** |
| Connection cables | |
| FMS-AK0200 | **0301820** |
| FMS-AK0500 | **0301821** |
| FMS-AK1000 | **0301822** |
| FMS-AK2000 | **0301823** |

## Finger blanks

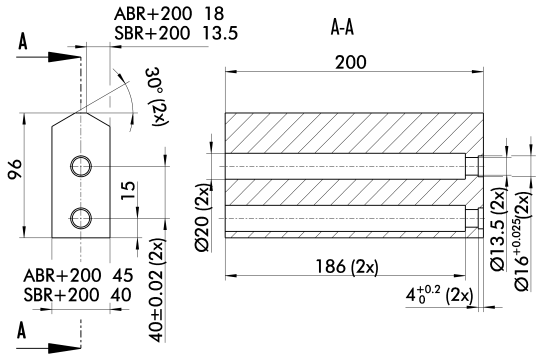


Finger blanks for customized subsequent machining

| Description | ID | Material | Scope of delivery |
|---|---|---|---|
| Finger blanks | | | |
| ABR-plus 200 | **0300015** | Aluminum | 1 |
| SBR-plus 200 | **0300025** | 16 MnCr 5 | 1 |

You can find more detailed information and individual parts of the above-mentioned accessories in the “Accessories” catalog section.

## Tolerance compensation unit

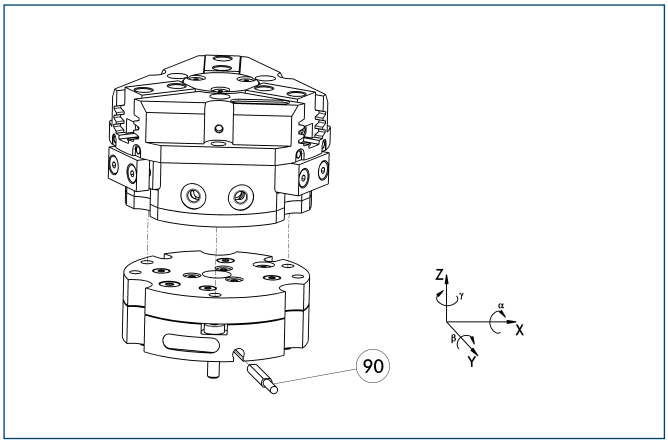


(90) Monitoring of locking

Grippers can be directly mounted without an adapter plate. Tolerance compensation unit and gripper have an identical screw connection diagram. Therefore the tolerance compensation units can be assembled later. Please consider the additional assembly height of the tolerance compensation unit. For details see catalog “Robot Accessories”.

| Description | ID | Locking | Deflection |
|---|---|---|---|
| Compensation unit | | | |
| TCU-200-3-MV-Z | **0324856** | Yes | |
| TCU-200-3-OV-Z | **0324857** | No | |

## Programmable magnetic switch

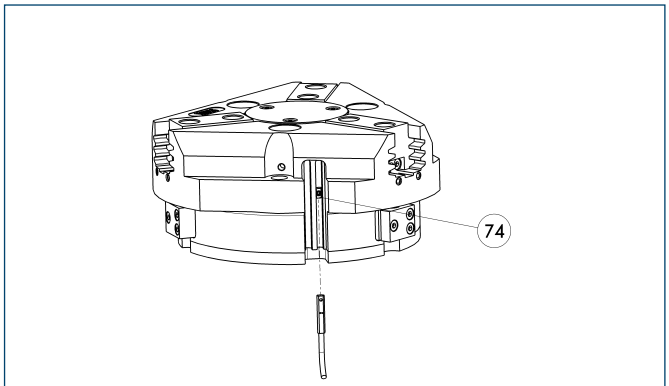


(74) Stop for MMS-P

Position monitoring with two programmable positions per sensor. The end position monitoring is mounted in the C-slot.

| Description | ID | Recommended product |
|---|---|---|
| Programmable magnetic switch | | |
| MMS-P 22-S-M8-PNP | **0301370** | • |
| MMSK-P 22-S-PNP | **0301371** | |
| Connection cables | | |
| KA BG08-L 4P-0500 | **0307767** | |
| KA BG08-L 4P-1000 | **0307768** | |
| KA BW08-L 4P-0500 | **0307765** | |
| KA BW08-L 4P-1000 | **0307766** | |
| Sensor Distributor | | |
| V2-M8-4P-2XM8-3P | **0301380** | |

ⓘ Please note the minimum permitted bending radii for the sensor cables, which are generally 35 mm.

ⓘ Per gripper one sensor (closer/NO) is required, optionally a cable extension.

You can find more detailed information and individual parts of the above-mentioned accessories in the “Accessories” catalog section.

## Electronic magnetic switches

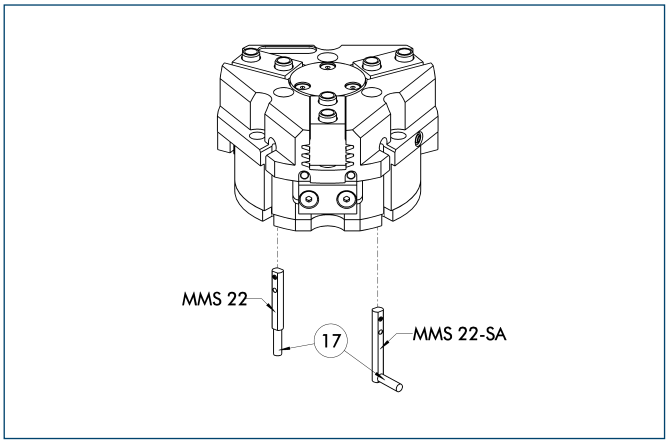


⑰ Cable outlet

End position monitoring for mounting in the C-slot

| Description | ID | Recommended product |
|---|---|---|
| Electronic magnetic switches | | |
| MMS 22-S-M5-PNP | **0301438** | |
| MMS 22-S-M5-NPN | **0301439** | |
| MMS 22-S-M8-PNP | **0301432** | • |
| MMS 22-S-M8-NPN | **0301433** | |
| MMSK 22-S-PNP | **0301434** | |
| MMSK 22-S-NPN | **0301435** | |
| Electronic magnetic switches with lateral cable outlet | | |
| MMS 22-S-M5-PNP-SA | **0301448** | |
| MMS 22-S-M5-NPN-SA | **0301449** | |
| MMS 22-S-M8-PNP-SA | **0301442** | • |
| MMS 22-S-M8-NPN-SA | **0301443** | |
| MMSK 22-S-PNP-SA | **0301444** | |
| MMSK 22-S-NPN-SA | **0301445** | |
| Reed Switches | | |
| RMS 22-S-M8 | **0377720** | • |
| Connection cables | | |
| KA BG05-L 3P-0300 | **0301652** | |
| KA BG08-L 3P-0300-PNP | **0301622** | |
| KA BG08-L 3P-0500-PNP | **0301623** | |
| KA BW05-L 3P-0300 | **0301650** | |
| KA BW08-L 3P-0300-NPN | **0301602** | |
| KA BW08-L 3P-0300-PNP | **0301594** | |
| KA BW08-L 3P-0500-NPN | **9641116** | |
| KA BW08-L 3P-0500-PNP | **0301502** | |
| Cable extensions | | |
| KV BW08-SG08 3P-0030-PNP | **0301495** | |
| KV BW08-SG08 3P-0100-PNP | **0301496** | |
| KV BW08-SG08 3P-0200-PNP | **0301497** | |

ⓘ Two sensors (closer/NO) are required for each gripper, plus extension cables as an option.

ⓘ Please note the minimum permitted bending radii for the sensor cables, which are generally 35 mm.

## Inductive proximity switches

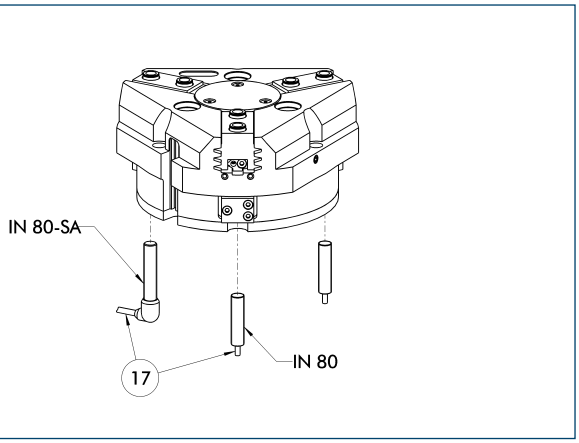


⑰ Cable outlet

End position monitoring for direct mounting

| Description | ID | Recommended product |
|---|---|---|
| Inductive proximity switches | | |
| IN 80-S-M8 | **0301478** | • |
| IN 80-S-M12 | **0301578** | |
| INK 80-S | **0301550** | |
| Inductive proximity switch with lateral outlet | | |
| IN 80-S-M12-SA | **0301587** | |
| IN 80-S-M8-SA | **0301483** | • |
| INK 80-S-SA | **0301566** | |
| Connection cables | | |
| KA BG08-L 3P-0300-PNP | **0301622** | |
| KA BG08-L 3P-0500-PNP | **0301623** | |
| KA BG12-L 3P-0500-PNP | **30016369** | |
| KA BW08-L 3P-0300-PNP | **0301594** | |
| KA BW08-L 3P-0500-PNP | **0301502** | |
| KA BW12-L 3P-0300-PNP | **0301503** | |
| KA BW12-L 3P-0500-PNP | **0301507** | |
| Cable extensions | | |
| KV BG12-SG12 3P-0030-PNP | **0301999** | |
| KV BG12-SG12 3P-0060-PNP | **0301998** | |
| KV BW08-SG08 3P-0030-PNP | **0301495** | |
| KV BW08-SG08 3P-0100-PNP | **0301496** | |
| KV BW08-SG08 3P-0200-PNP | **0301497** | |
| KV BW12-SG12 3P-0030-PNP | **0301595** | |
| KV BW12-SG12 3P-0100-PNP | **0301596** | |
| KV BW12-SG12 3P-0200-PNP | **0301597** | |

ⓘ Two sensors (closer/NO) are required for each gripper, plus extension cables as an option.

ⓘ Please note the minimum permitted bending radii for the sensor cables, which are generally 35 mm.

You can find more detailed information and individual parts of the above-mentioned accessories in the “Accessories” catalog section.

## Cylindrical Reed Switches

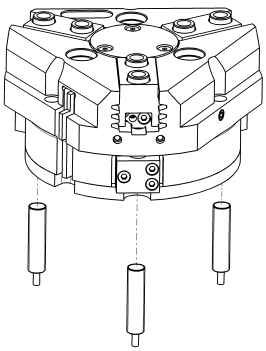

End position monitoring mounted with mounting kit

| Description | ID |
|---|---|
| Mounting kit for proximity switch | |
| AS-RMS 80 PGN/PZN-plus 160-380 | **0377727** |
| Reed Switches | |
| RMS 80-S-M8 | **0377721** |

ⓘ Two sensors (closer/NO) are required for each gripper, plus extension cables as an option.
ⓘ This mounting kit needs to be ordered optionally as an accessory.
ⓘ Please note the minimum permitted bending radii for the sensor cables, which are generally 35 mm.

## Analog position sensor

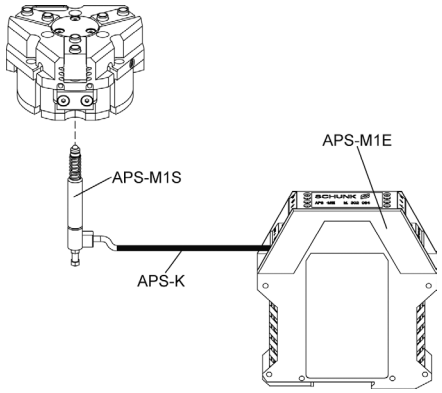


Analog multi position monitoring for any desired positions

| Description | ID |
|---|---|
| Mounting kit | |
| AS-APS-M1-200/1 and 380/2 | **0302085** |
| AS-APS-M1-200/2 | **0302086** |
| Connection cables | |
| APS-K0200 | **0302066** |
| APS-K0700 | **0302068** |
| Electronic Processor | |
| APS-M1E | **0302064** |
| Sensor | |
| APS-M1S | **0302062** |

ⓘ When using an APS system, for each gripper a mounting kit (AS-APS), an APS sensor (APS-M 1S, incl. 3 m cable) as well as an electronics (APS-M1e) are required.
ⓘ An extension cable (APS-K) can be connected between the sensor and the electronics as an option. The max. cable length between the sensor and the electronics is 10 m, between the electronics and their control unit (PLC) it is max. 1 m.


You can find more detailed information and individual parts of the above-mentioned accessories in the “Accessories” catalog section.

## Flexible Position Sensor

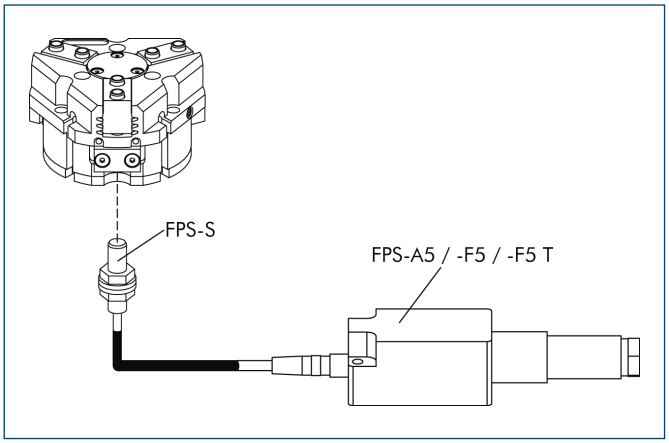


Flexible position monitoring of up to five positions

| Description | ID |
|---|---|
| Mounting kit for FPS | |
| AS-PGN/PZN-plus 200/1 | **0301640** |
| AS-PGN/PZN-plus 200/2 | **0301641** |
| Electronic Processor | |
| FPS-F5 | **0301805** |
| FPS-F5 T | **0301807** |
| Sensor | |
| FPS-S M8 | **0301704** |

ⓘ When using a FPS system, a FPS sensor (FPS-S) and a control unit (FPS-F5 / F5 T or A5) are required for each gripper as well as a mounting kit (AS), if listed. Cable extensions (KV) are available as options in the “Accessories” catalog section.

You can find more detailed information and individual parts of the above-mentioned accessories in the “Accessories” catalog section.

# PZN-plus 240

**Pneumatic • 3-Finger Centric Gripper • Universal Gripper**



## Gripping force, I.D. gripping

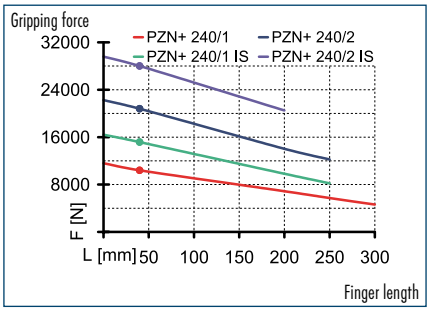


## Gripping force, O.D. gripping

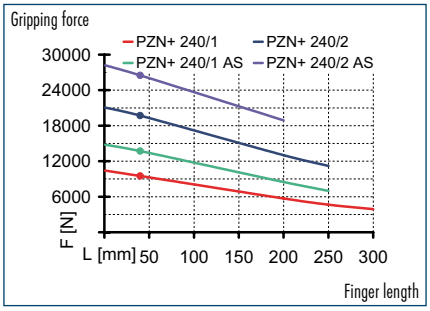


## Finger load

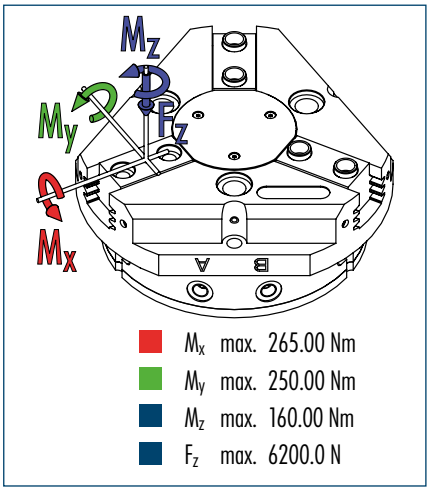


- $M_x$ max. 265.00 Nm
- $M_y$ max. 250.00 Nm
- $M_z$ max. 160.00 Nm
- $F_z$ max. 6200.0 N

ⓘ The indicated moments and forces are static values, apply per base jaw and may occur simultaneously. $M_y$ may arise in addition to the moment generated by the gripping force itself. If the max. permitted finger weight is exceeded, it is imperative to throttle the air pressure so that the jaw movement occurs without any hitting or bouncing. Service life may be reduced.

## Technical data

| Description | | PZN-plus 240-1 | PZN-plus 240-2 | PZN-plus 240-1-AS | PZN-plus 240-2-AS | PZN-plus 240-1-IS | PZN-plus 240-2-IS |
|---|---|---|---|---|---|---|---|
| **ID** | | **0303316** | **0303416** | **0303516** | **0303616** | **0303546** | **0303646** |
| Stroke per finger | [mm] | 30 | 17 | 30 | 17 | 30 | 17 |
| Closing force | [N] | 9500 | 19700 | 13720 | 26500 | | |
| Opening force | [N] | 10400 | 20800 | | | 15170 | 28000 |
| Min. spring force | [N] | | | 4220 | 6800 | 4770 | 7200 |
| Weight | [kg] | 20 | 20 | 24 | 24 | 24 | 24 |
| Recommended workpiece weight | [kg] | 50 | 100.5 | 50 | 100.5 | 50 | 100.5 |
| Air consumption per double stroke | [cm³] | 1780 | 1780 | 3090 | 3090 | 3090 | 3090 |
| Min./max. operating pressure | [bar] | 2/8 | 2/8 | 4/6.5 | 4/6.5 | 4/6.5 | 4/6.5 |
| Nominal operating pressure | [bar] | 6 | 6 | 6 | 6 | 6 | 6 |
| Closing/opening time | [s] | 1.25/1.25 | 1.25/1.25 | 1.1/2.1 | 1.1/2.1 | 1.7/1.1 | 1.7/1.1 |
| Max. permitted finger length | [mm] | 300 | 250 | 250 | 200 | 250 | 200 |
| Max. permitted weight per finger | [kg] | 8.5 | 8.5 | 8.5 | 8.5 | 8.5 | 8.5 |
| IP class | | 40 | 40 | 40 | 40 | 40 | 40 |
| Min./max. ambient temperature | [°C] | -10/90 | -10/90 | -10/90 | -10/90 | -10/90 | -10/90 |
| Repeat accuracy | [mm] | 0.05 | 0.05 | 0.05 | 0.05 | 0.05 | 0.05 |
| Cleanroom class ISO-classification 14644-1 | | 5 | 5 | 5 | 5 | 5 | 5 |
| **OPTIONS and their characteristics** | | | | | | | |
| Dust-protection version | | **37303316** | **37303416** | **37303516** | **37303616** | **37303546** | **37303646** |
| IP class | | 64 | 64 | 64 | 64 | 64 | 64 |
| Weight | [kg] | 21.5 | 21.5 | 25.5 | 25.5 | 25.5 | 25.5 |
| Anti-corrosion version | | **38303316** | **38303416** | **38303516** | **38303616** | **38303546** | **38303646** |
| High-temperature version | | **39303316** | **39303416** | **39303516** | **39303616** | **39303546** | **39303646** |
| Min./max. ambient temperature | [°C] | -10/130 | -10/130 | -10/130 | -10/130 | -10/130 | -10/130 |
| Precision version | | **0303346** | **0303446** | **0303496** | **0303596** | | |

## Main view

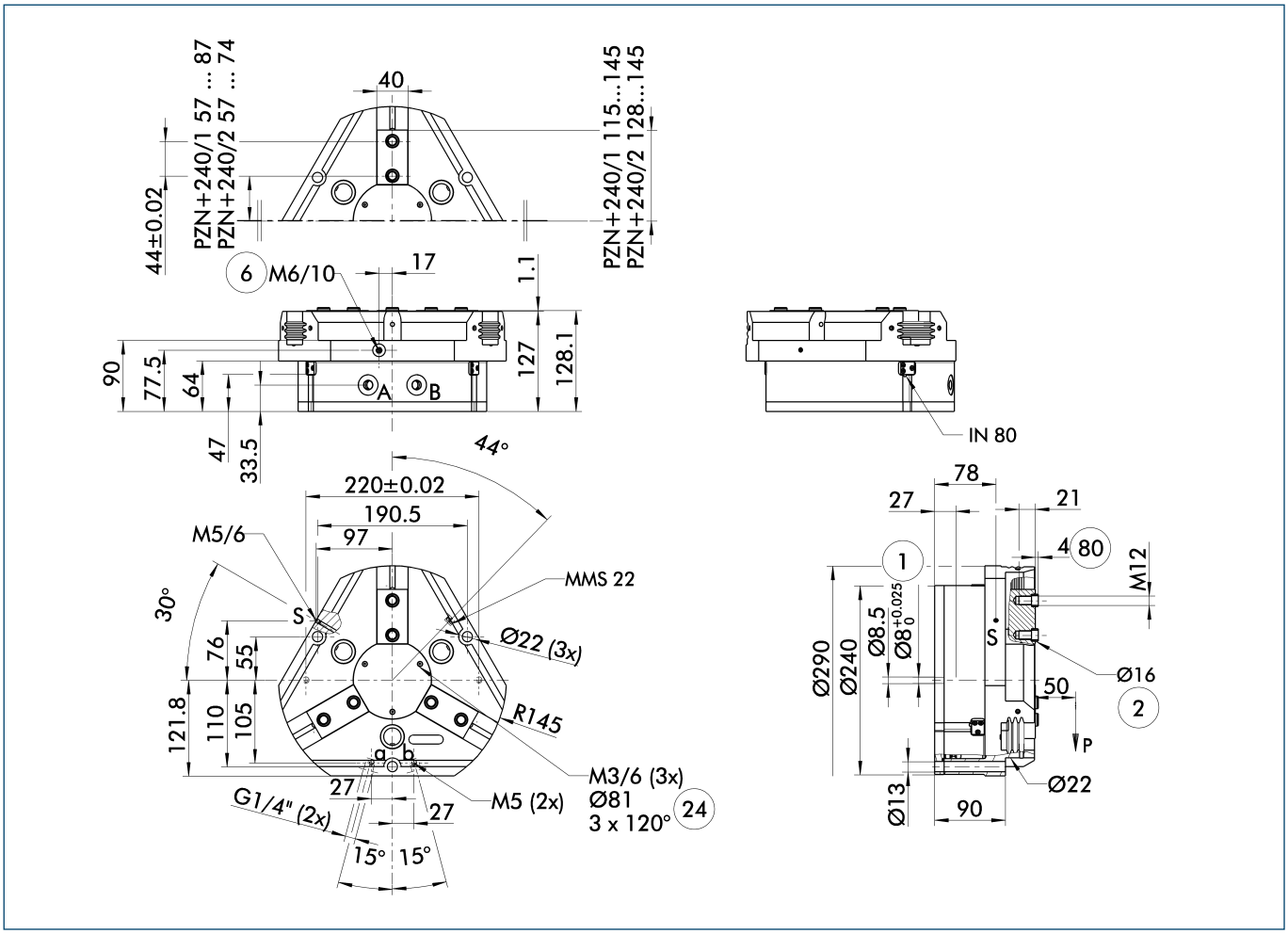


The drawing shows the gripper in the basic version with closed jaws, the dimensions do not include the options described below.

ⓘ The SDV-P pressure maintenance valve can also be used for I.D. or O.D. gripping alternatively or in addition to the spring-loaded, mechanical gripping force maintenance device (see "Accessories" catalog section).

A, a Main/direct connection, gripper opening
B, b Main/direct connection, gripper closing
S Air purge connection
① Gripper connection
② Finger connection
⑥ Lubricating nipple connection
㉔ Bolt circle
㊽ Depth of the centering sleeve hole in the matching part

## Hose-free direct connection

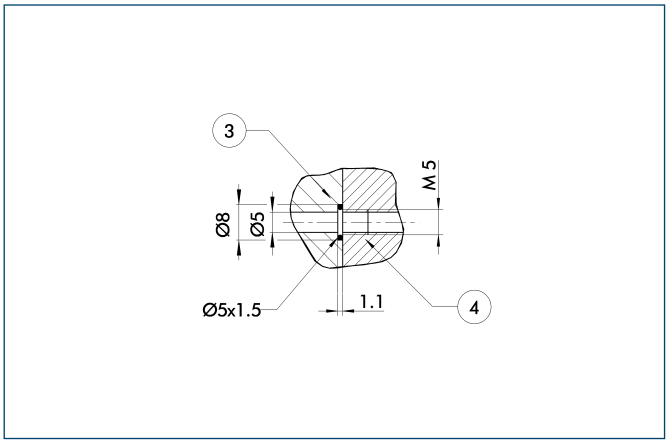


③ Adapter
④ Gripper

The direct connection is used for supplying compressed air without hoses. Instead, the pressure medium is fed through bore-holes in the mounting plate.

## AS/IS gripping force maintenance device

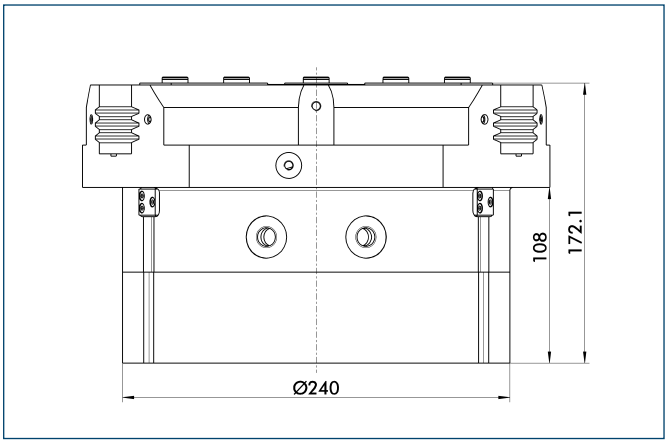


The mechanical gripping force maintenance device ensures a minimum gripping force even in case of pressure drop. This acts as closing force in the AS version, and as opening force in the IS version. In addition, the gripping force maintenance device can also be used for increasing the gripping force or for single-acting gripping.

## Dust-protection version

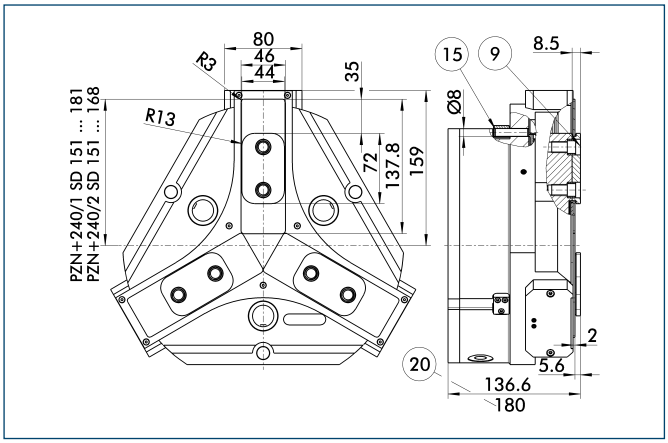


⑨ For mounting screw connection diagram, see basic version
⑮ Sealing bolt
⑳ For AS / IS version

The "dust-protection" option increases the degree of protection against penetrating substances. The screw connection diagram shifts by the height of the intermediate jaw. The finger length is still measured from the upper edge of the gripper housing.

## Precision version

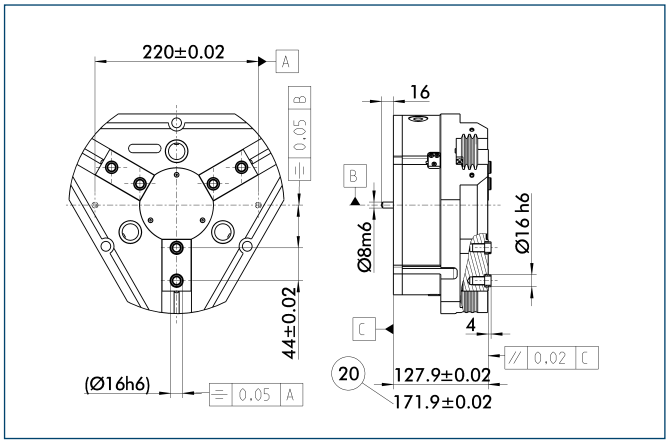


⑳ For AS / IS version

The indicated tolerances just refer to the types of precision versions shown in the chart of technical specifications. All other types of precision versions are available on request.

## Spring-loaded pressure piece

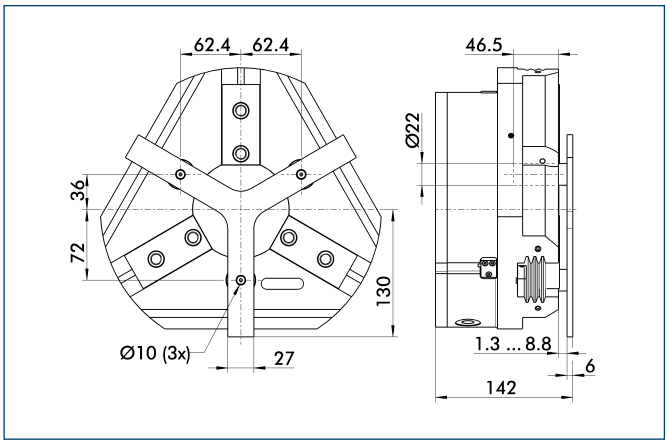


For spring-supported positioning of the workpiece against a stop after the gripper has opened. Especially developed for loading machines.

| Description | ID | Stroke | Min. force |
|---|---|---|---|
| Spring-loaded pressure piece | | | |
| A-PZN-plus/DPZ-plus 240 | **0303726** | 7.5 mm | 240 N |

ⓘ The pressure piece cannot be combined with the dust-protection version. Please contact us if you require a special pressure piece.

## Force measuring jaws

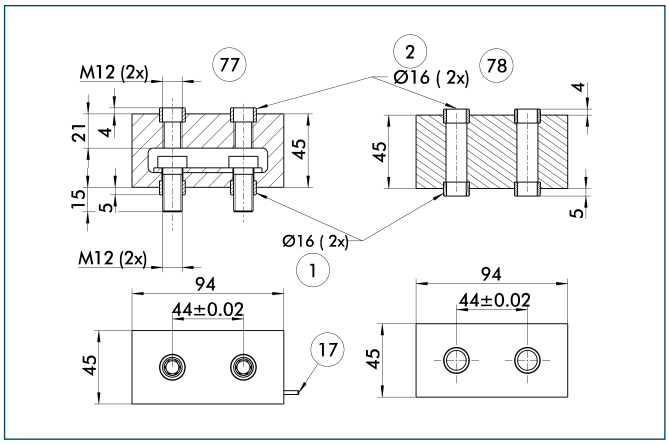


① Gripper connection
② Finger connection
⑰ Cable outlet
⑦⑦ Active intermediate jaws
⑦⑧ Passive intermediate jaws

Force measuring jaws measure gripping forces, but can also determine workpiece weights or dimensional deviations. There are active and passive intermediate jaws (FMS-ZBA or FMS-ZBP). At least one active force measuring jaw is required per gripper, the rest can be passive. For each active jaw, a FMS-A1 control unit and a FMS-A connection cable are required.

| Description | ID |
|---|---|
| Active intermediate jaws | |
| FMS-ZBA 240 | **0301844** |
| Passive intermediate jaws | |
| FMS-ZBP 240 | **0301845** |
| Electronic Processor | |
| FMS-A2 | **0301811** |
| Connection cables | |
| FMS-AK0200 | **0301820** |
| FMS-AK0500 | **0301821** |
| FMS-AK1000 | **0301822** |
| FMS-AK2000 | **0301823** |

You can find more detailed information and individual parts of the above-mentioned accessories in the "Accessories" catalog section.

## Finger blanks

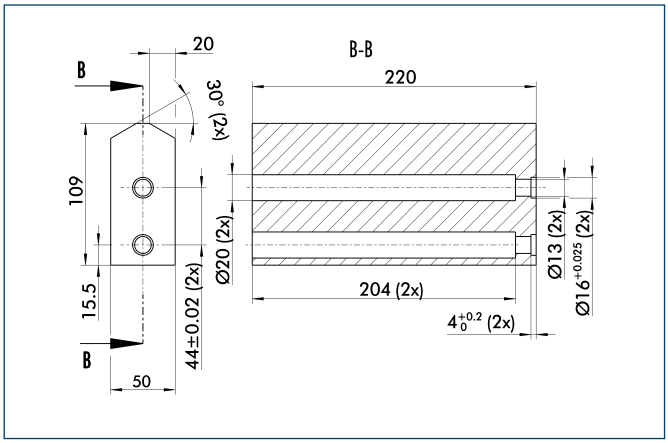


Finger blanks for customized subsequent machining

| Description | ID | Material | Scope of delivery |
|---|---|---|---|
| Finger blanks | | | |
| ABR-plus 240 | **0300017** | Aluminum | 1 |
| SBR-plus 240 | **0300027** | 16 MnCr 5 | 1 |

## Programmable magnetic switch

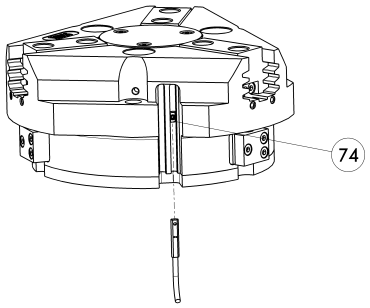


(74) Stop for MMS-P

Position monitoring with two programmable positions per sensor. The end position monitoring is mounted in the C-slot.

| Description | ID | Recommended product |
|---|---|---|
| Programmable magnetic switch | | |
| MMS-P 22-S-M8-PNP | **0301370** | • |
| MMSK-P 22-S-PNP | **0301371** | |
| Connection cables | | |
| KA BG08-L 4P-0500 | **0307767** | |
| KA BG08-L 4P-1000 | **0307768** | |
| KA BW08-L 4P-0500 | **0307765** | |
| KA BW08-L 4P-1000 | **0307766** | |
| Sensor Distributor | | |
| V2-M8-4P-2XM8-3P | **0301380** | |

ⓘ Please note the minimum permitted bending radii for the sensor cables, which are generally 35 mm.
ⓘ Per gripper one sensor (closer/NO) is required, optionally a cable extension.

You can find more detailed information and individual parts of the above-mentioned accessories in the “Accessories” catalog section.

## Electronic magnetic switches

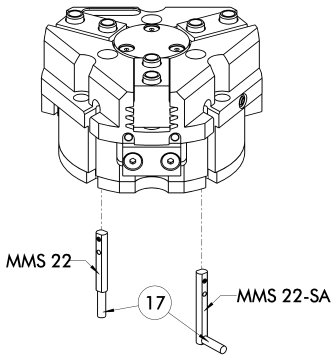


17 Cable outlet

End position monitoring for mounting in the C-slot

| Description | ID | Recommended product |
|---|---|---|
| Electronic magnetic switches | | |
| MMS 22-S-M5-PNP | 0301438 | |
| MMS 22-S-M5-NPN | 0301439 | |
| MMS 22-S-M8-PNP | 0301432 | • |
| MMS 22-S-M8-NPN | 0301433 | |
| MMSK 22-S-PNP | 0301434 | |
| MMSK 22-S-NPN | 0301435 | |
| Electronic magnetic switches with lateral cable outlet | | |
| MMS 22-S-M5-PNP-SA | 0301448 | |
| MMS 22-S-M5-NPN-SA | 0301449 | |
| MMS 22-S-M8-PNP-SA | 0301442 | • |
| MMS 22-S-M8-NPN-SA | 0301443 | |
| MMSK 22-S-PNP-SA | 0301444 | |
| MMSK 22-S-NPN-SA | 0301445 | |
| Reed Switches | | |
| RMS 22-S-M8 | 0377720 | • |
| Connection cables | | |
| KA BG05-L 3P-0300 | 0301652 | |
| KA BG08-L 3P-0300-PNP | 0301622 | |
| KA BG08-L 3P-0500-PNP | 0301623 | |
| KA BW05-L 3P-0300 | 0301650 | |
| KA BW08-L 3P-0300-NPN | 0301602 | |
| KA BW08-L 3P-0300-PNP | 0301594 | |
| KA BW08-L 3P-0500-NPN | 9641116 | |
| KA BW08-L 3P-0500-PNP | 0301502 | |
| Cable extensions | | |
| KV BW08-SG08 3P-0030-PNP | 0301495 | |
| KV BW08-SG08 3P-0100-PNP | 0301496 | |
| KV BW08-SG08 3P-0200-PNP | 0301497 | |

ⓘ Two sensors (closer/NO) are required for each gripper, plus extension cables as an option.

ⓘ Please note the minimum permitted bending radii for the sensor cables, which are generally 35 mm.

## Inductive proximity switches

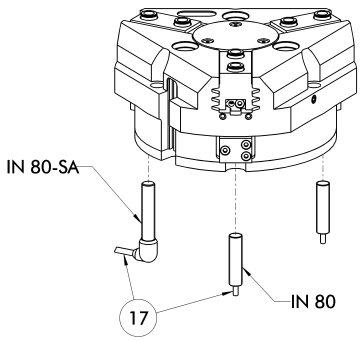


17 Cable outlet

End position monitoring for direct mounting

| Description | ID | Recommended product |
|---|---|---|
| Inductive proximity switches | | |
| IN 80-S-M8 | 0301478 | • |
| IN 80-S-M12 | 0301578 | |
| INK 80-S | 0301550 | |
| Inductive proximity switch with lateral outlet | | |
| IN 80-S-M12-SA | 0301587 | |
| IN 80-S-M8-SA | 0301483 | • |
| INK 80-S-SA | 0301566 | |
| Connection cables | | |
| KA BG08-L 3P-0300-PNP | 0301622 | |
| KA BG08-L 3P-0500-PNP | 0301623 | |
| KA BG12-L 3P-0500-PNP | 30016369 | |
| KA BW08-L 3P-0300-PNP | 0301594 | |
| KA BW08-L 3P-0500-PNP | 0301502 | |
| KA BW12-L 3P-0300-PNP | 0301503 | |
| KA BW12-L 3P-0500-PNP | 0301507 | |
| Cable extensions | | |
| KV BG12-SG12 3P-0030-PNP | 0301999 | |
| KV BG12-SG12 3P-0060-PNP | 0301998 | |
| KV BW08-SG08 3P-0030-PNP | 0301495 | |
| KV BW08-SG08 3P-0100-PNP | 0301496 | |
| KV BW08-SG08 3P-0200-PNP | 0301497 | |
| KV BW12-SG12 3P-0030-PNP | 0301595 | |
| KV BW12-SG12 3P-0100-PNP | 0301596 | |
| KV BW12-SG12 3P-0200-PNP | 0301597 | |

ⓘ Two sensors (closer/NO) are required for each gripper, plus extension cables as an option.

ⓘ Please note the minimum permitted bending radii for the sensor cables, which are generally 35 mm.

You can find more detailed information and individual parts of the above-mentioned accessories in the “Accessories” catalog section.

## Cylindrical Reed Switches

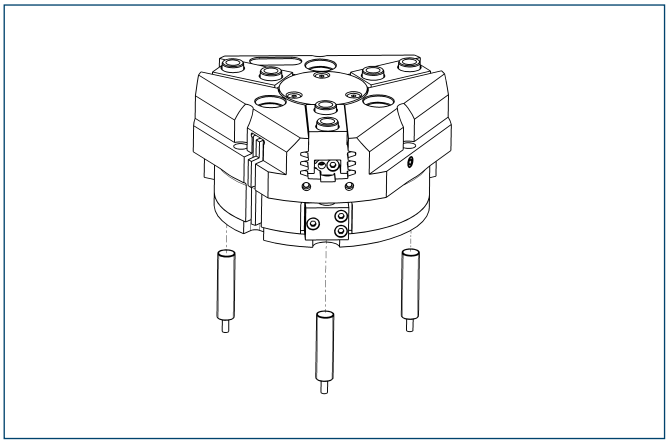

End position monitoring mounted with mounting kit

| Description | ID |
|---|---|
| Mounting kit for proximity switch | |
| AS-RMS 80 PGN/PZN-plus 160-380 | **0377727** |
| Reed Switches | |
| RMS 80-S-M8 | **0377721** |

ⓘ Two sensors (closer/NO) are required for each gripper, plus extension cables as an option.
ⓘ This mounting kit needs to be ordered optionally as an accessory.
ⓘ Please note the minimum permitted bending radii for the sensor cables, which are generally 35 mm.

## Analog position sensor

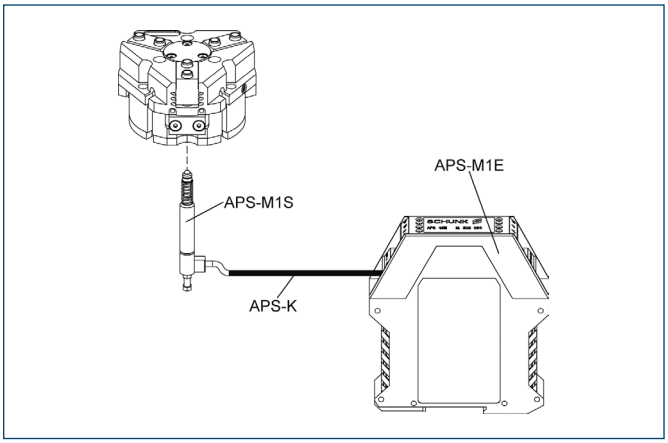


Analog multi position monitoring for any desired positions

| Description | ID |
|---|---|
| Mounting kit | |
| AS-APS-M1-160/1 and 240/2 | **0302083** |
| AS-APS-M1-240/1 | **0302087** |
| Connection cables | |
| APS-K0200 | **0302066** |
| APS-K0700 | **0302068** |
| Electronic Processor | |
| APS-M1E | **0302064** |
| Sensor | |
| APS-M1S | **0302062** |

ⓘ When using an APS system, for each gripper a mounting kit (AS-APS), an APS sensor (APS-M 1S, incl. 3 m cable) as well as an electronics (APS-M1e) are required.
ⓘ An extension cable (APS-K) can be connected between the sensor and the electronics as an option. The max. cable length between the sensor and the electronics is 10 m, between the electronics and their control unit (PLC) it is max. 1 m.

You can find more detailed information and individual parts of the above-mentioned accessories in the “Accessories” catalog section.

## Flexible Position Sensor

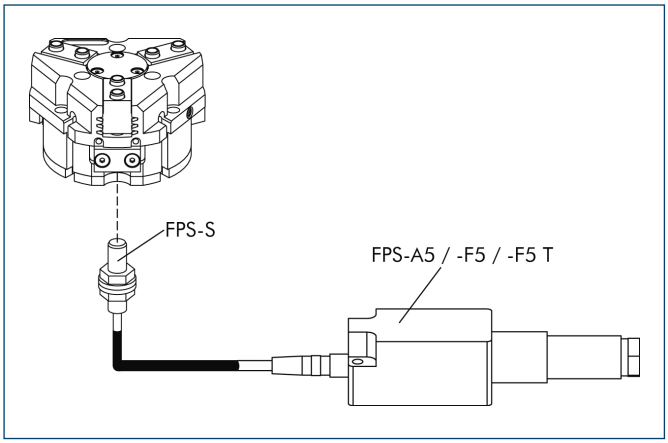


Flexible position monitoring of up to five positions

| Description | ID |
|---|---|
| Mounting kit for FPS | |
| AS-PGN/PZN-plus 240/1 | **0301643** |
| AS-PGN/PZN-plus 240/2 | **0301644** |
| Electronic Processor | |
| FPS-F5 | **0301805** |
| FPS-F5 T | **0301807** |
| Sensor | |
| FPS-S M8 | **0301704** |

ⓘ When using a FPS system, a FPS sensor (FPS-S) and a control unit (FPS-F5 / F5 T or A5) are required for each gripper as well as a mounting kit (AS), if listed. Cable extensions (KV) are available as options in the “Accessories” catalog section.

You can find more detailed information and individual parts of the above-mentioned accessories in the “Accessories” catalog section.

# PZN-plus 300

**Pneumatic • 3-Finger Centric Gripper • Universal Gripper**



## Gripping force, I.D. gripping

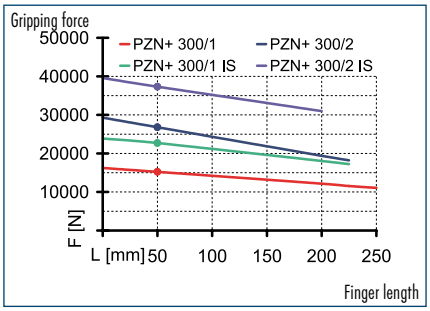


## Gripping force, O.D. gripping

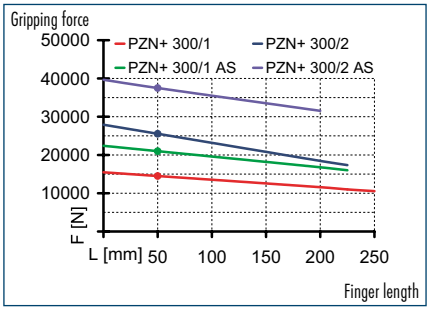


## Finger load

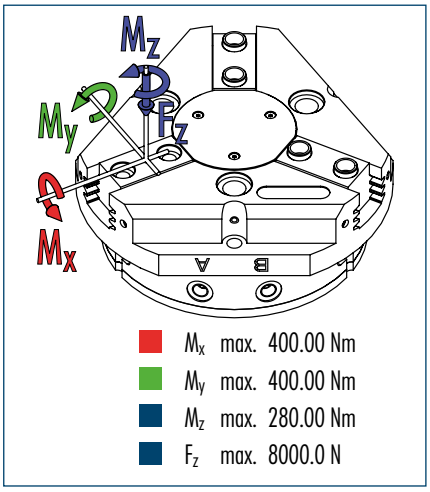


ⓘ The indicated moments and forces are static values, apply per base jaw and may occur simultaneously. $M_y$ may arise in addition to the moment generated by the gripping force itself. If the max. permitted finger weight is exceeded, it is imperative to throttle the air pressure so that the jaw movement occurs without any hitting or bouncing. Service life may be reduced.

## Technical data

| Description | | PZN-plus 300-1 | PZN-plus 300-2 | PZN-plus 300-1-AS | PZN-plus 300-2-AS | PZN-plus 300-1-IS | PZN-plus 300-2-IS |
|---|---|---|---|---|---|---|---|
| **ID** | | **0303317** | **0303417** | **0303517** | **0303617** | **0303547** | **0303647** |
| Stroke per finger | [mm] | 35 | 20 | 35 | 20 | 35 | 20 |
| Closing force | [N] | 14500 | 25500 | 21000 | 35500 | | |
| Opening force | [N] | 15200 | 16800 | | | 22700 | 37300 |
| Min. spring force | [N] | | | 6500 | 10000 | 7500 | 10500 |
| Weight | [kg] | 33 | 33 | 43.5 | 43.5 | 43.5 | 43.5 |
| Recommended workpiece weight | [kg] | 72.5 | 127.5 | 72.5 | 127.5 | 72.5 | 127.5 |
| Air consumption per double stroke | [cm³] | 2850 | 2850 | 5050 | 5050 | 5050 | 5050 |
| Min./max. operating pressure | [bar] | 2/8 | 2/8 | 4/6.5 | 4/6.5 | 4/6.5 | 4/6.5 |
| Nominal operating pressure | [bar] | 6 | 6 | 6 | 6 | 6 | 6 |
| Closing/opening time | [s] | 1.3/1.3 | 1.3/1.3 | 1.2/2.5 | 1.2/2.5 | 2/1.2 | 2/1.2 |
| Max. permitted finger length | [mm] | 250 | 225 | 225 | 200 | 225 | 200 |
| Max. permitted weight per finger | [kg] | 11.5 | 11.5 | 11.5 | 11.5 | 11.5 | 11.5 |
| IP class | | 40 | 40 | 40 | 40 | 40 | 40 |
| Min./max. ambient temperature | [°C] | -10/90 | -10/90 | -10/90 | -10/90 | -10/90 | -10/90 |
| Repeat accuracy | [mm] | 0.05 | 0.05 | 0.05 | 0.05 | 0.05 | 0.05 |
| Cleanroom class ISO-classification 14644-1 | | 5 | 5 | 5 | 5 | 5 | 5 |
| **OPTIONS and their characteristics** | | | | | | | |
| Dust-protection version | | **37303317** | **37303417** | **37303517** | **37303617** | **37303547** | **37303647** |
| IP class | | 64 | 64 | 64 | 64 | 64 | 64 |
| Weight | [kg] | 35.5 | 35.5 | 46 | 46 | 46 | 46 |
| Anti-corrosion version | | **38303317** | **38303417** | **38303517** | **38303617** | **38303547** | **38303647** |
| High-temperature version | | **39303317** | **39303417** | **39303517** | **39303617** | **39303547** | **39303647** |
| Min./max. ambient temperature | [°C] | -10/130 | -10/130 | -10/130 | -10/130 | -10/130 | -10/130 |
| Precision version | | **0303347** | **0303447** | **0303497** | **0303597** | | |

## Main view

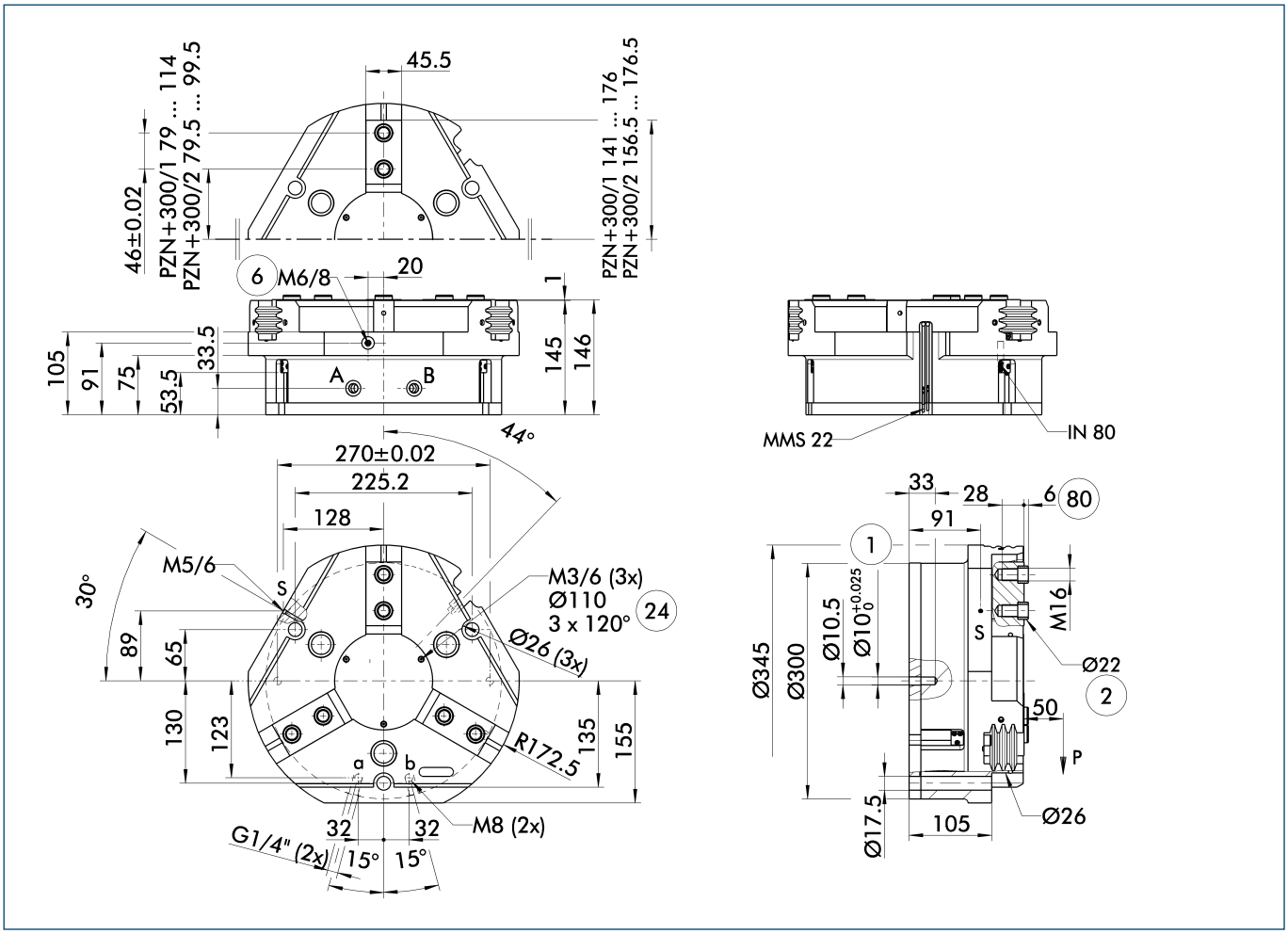


The drawing shows the gripper in the basic version with closed jaws, the dimensions do not include the options described below.

ⓘ The SDV-P pressure maintenance valve can also be used for I.D. or O.D. gripping alternatively or in addition to the spring-loaded, mechanical gripping force maintenance device (see "Accessories" catalog section).

A, a Main/direct connection, gripper opening
B, b Main/direct connection, gripper closing
S Air purge connection
① Gripper connection
② Finger connection
⑥ Lubricating nipple connection
㉔ Bolt circle
㊽ Depth of the centering sleeve hole in the matching part

## Hose-free direct connection

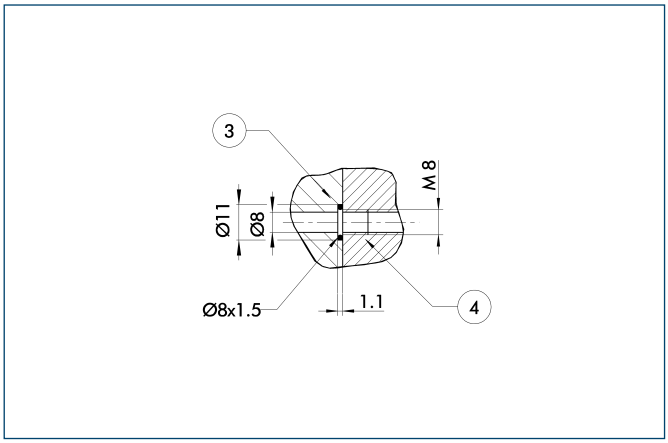


③ Adapter
④ Gripper

The direct connection is used for supplying compressed air without hoses. Instead, the pressure medium is fed through bore-holes in the mounting plate.

## AS/IS gripping force maintenance device

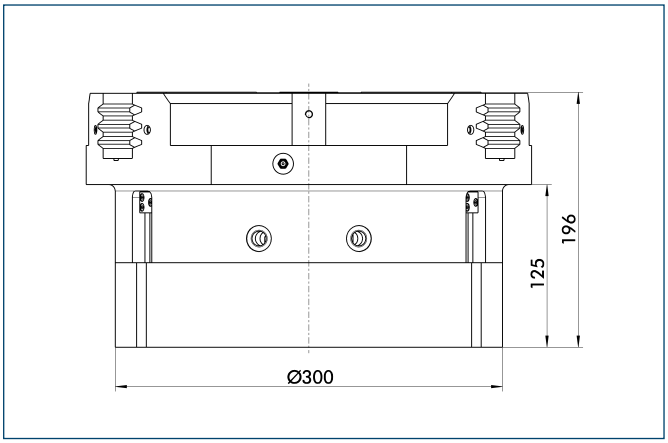


The mechanical gripping force maintenance device ensures a minimum gripping force even in case of pressure drop. This acts as closing force in the AS version, and as opening force in the IS version. In addition, the gripping force maintenance device can also be used for increasing the gripping force or for single-acting gripping.

## Dust-protection version

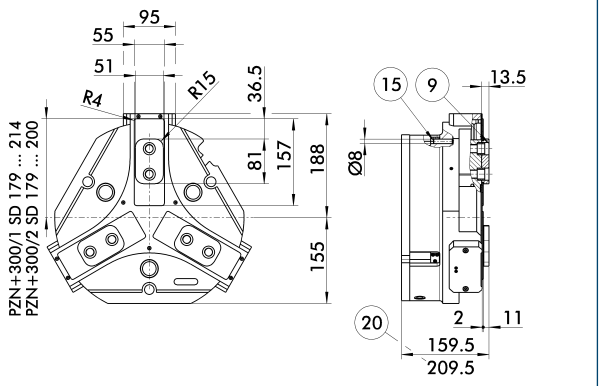


⑨ For mounting screw connection diagram, see basic version
⑮ Sealing bolt
⑳ For AS / IS version

The "dust-protection" option increases the degree of protection against penetrating substances. The screw connection diagram shifts by the height of the intermediate jaw. The finger length is still measured from the upper edge of the gripper housing.

## Precision version

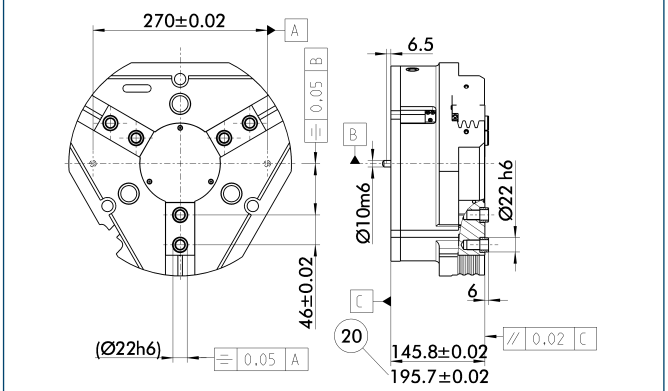


⑳ For AS / IS version

The indicated tolerances just refer to the types of precision versions shown in the chart of technical specifications. All other types of precision versions are available on request.

## Spring-loaded pressure piece

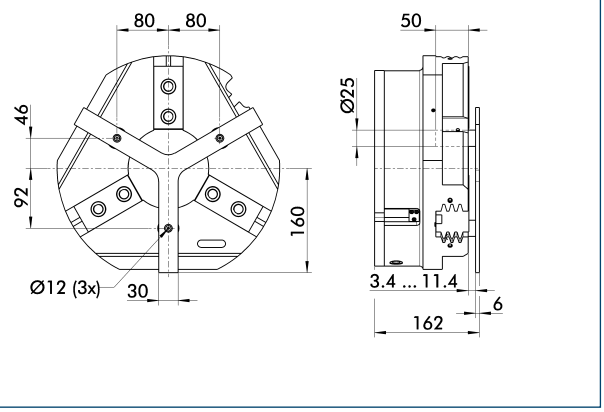


For spring-supported positioning of the workpiece against a stop after the gripper has opened. Especially developed for loading machines.

| Description | ID | Stroke | Min. force |
|---|---|---|---|
| Spring-loaded pressure piece | | | |
| A-PZN-plus/DPZ-plus 300 | **0303727** | 8 mm | 160 N |

ⓘ The pressure piece cannot be combined with the dust-protection version. Please contact us if you require a special pressure piece.

## Force measuring jaws

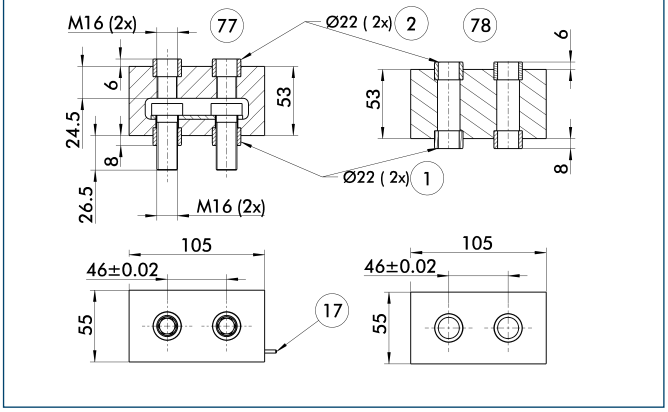


① Gripper connection
② Finger connection
⑰ Cable outlet
⑦⑦ Active intermediate jaws
⑦⑧ Passive intermediate jaws

Force measuring jaws measure gripping forces, but can also determine workpiece weights or dimensional deviations. There are active and passive intermediate jaws (FMS-ZBA or FMS-ZBP). At least one active force measuring jaw is required per gripper, the rest can be passive. For each active jaw, a FMS-A1 control unit and a FMS-A connection cable are required.

| Description | ID |
|---|---|
| Active intermediate jaws | |
| FMS-ZBA 300 | **0301846** |
| Passive intermediate jaws | |
| FMS-ZBP 300 | **0301847** |
| Electronic Processor | |
| FMS-A2 | **0301811** |
| Connection cables | |
| FMS-AK0200 | **0301820** |
| FMS-AK0500 | **0301821** |
| FMS-AK1000 | **0301822** |
| FMS-AK2000 | **0301823** |

You can find more detailed information and individual parts of the above-mentioned accessories in the "Accessories" catalog section.

## Finger blanks

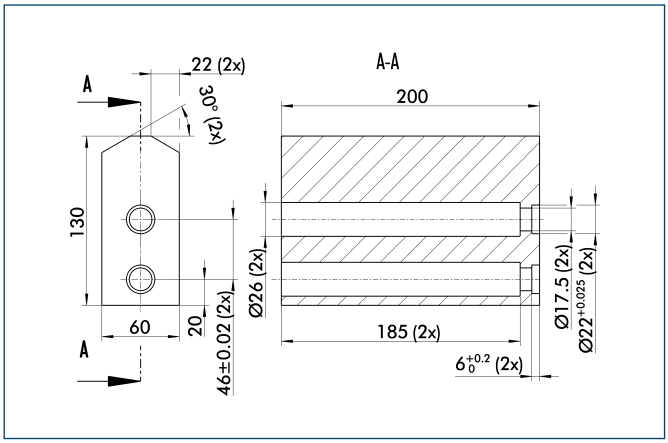


Finger blanks for customized subsequent machining

| Description | ID | Material | Scope of delivery |
|---|---|---|---|
| Finger blanks | | | |
| ABR-plus 300 | **0300016** | Aluminum | 1 |
| SBR-plus 300 | **0300026** | 16 MnCr 5 | 1 |

## Electronic magnetic switches

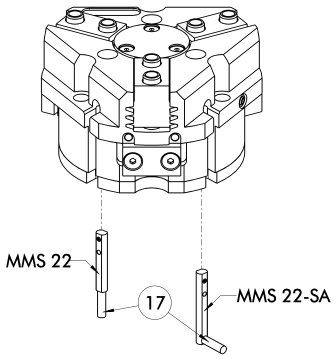


⑰ Cable outlet

End position monitoring for mounting in the C-slot

| Description | ID | Recommended product |
|---|---|---|
| Electronic magnetic switches | | |
| MMS 22-S-M5-PNP | **0301438** | |
| MMS 22-S-M5-NPN | **0301439** | |
| MMS 22-S-M8-PNP | **0301432** | • |
| MMS 22-S-M8-NPN | **0301433** | |
| MMSK 22-S-PNP | **0301434** | |
| MMSK 22-S-NPN | **0301435** | |
| Electronic magnetic switches with lateral cable outlet | | |
| MMS 22-S-M5-PNP-SA | **0301448** | |
| MMS 22-S-M5-NPN-SA | **0301449** | |
| MMS 22-S-M8-PNP-SA | **0301442** | • |
| MMS 22-S-M8-NPN-SA | **0301443** | |
| MMSK 22-S-PNP-SA | **0301444** | |
| MMSK 22-S-NPN-SA | **0301445** | |
| Reed Switches | | |
| RMS 22-S-M8 | **0377720** | • |
| Connection cables | | |
| KA BG05-L 3P-0300 | **0301652** | |
| KA BG08-L 3P-0300-PNP | **0301622** | |
| KA BG08-L 3P-0500-PNP | **0301623** | |
| KA BW05-L 3P-0300 | **0301650** | |
| KA BW08-L 3P-0300-NPN | **0301602** | |
| KA BW08-L 3P-0300-PNP | **0301594** | |
| KA BW08-L 3P-0500-NPN | **9641116** | |
| KA BW08-L 3P-0500-PNP | **0301502** | |
| Cable extensions | | |
| KV BW08-SG08 3P-0030-PNP | **0301495** | |
| KV BW08-SG08 3P-0100-PNP | **0301496** | |
| KV BW08-SG08 3P-0200-PNP | **0301497** | |

ⓘ Two sensors (closer/NO) are required for each gripper, plus extension cables as an option.

ⓘ Please note the minimum permitted bending radii for the sensor cables, which are generally 35 mm.

You can find more detailed information and individual parts of the above-mentioned accessories in the “Accessories” catalog section.

## Inductive proximity switches

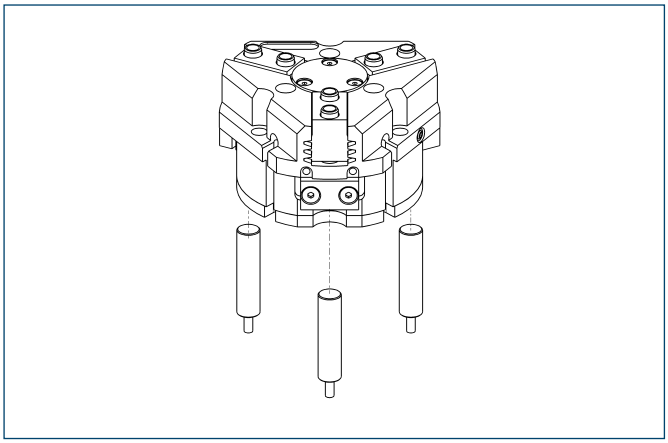

End position monitoring for direct mounting

| Description | ID | Recommended product |
|---|---|---|
| Inductive proximity switches | | |
| IN 80-S-M8 | **0301478** | • |
| IN 80-S-M12 | **0301578** | |
| INK 80-S | **0301550** | |
| Connection cables | | |
| KA BG08-L 3P-0300-PNP | **0301622** | |
| KA BG08-L 3P-0500-PNP | **0301623** | |
| KA BG12-L 3P-0500-PNP | **30016369** | |
| KA BW08-L 3P-0300-PNP | **0301594** | |
| KA BW08-L 3P-0500-PNP | **0301502** | |
| KA BW12-L 3P-0300-PNP | **0301503** | |
| KA BW12-L 3P-0500-PNP | **0301507** | |
| Cable extensions | | |
| KV BG12-SG12 3P-0030-PNP | **0301999** | |
| KV BG12-SG12 3P-0060-PNP | **0301998** | |
| KV BW08-SG08 3P-0030-PNP | **0301495** | |
| KV BW08-SG08 3P-0100-PNP | **0301496** | |
| KV BW08-SG08 3P-0200-PNP | **0301497** | |
| KV BW12-SG12 3P-0030-PNP | **0301595** | |
| KV BW12-SG12 3P-0100-PNP | **0301596** | |
| KV BW12-SG12 3P-0200-PNP | **0301597** | |

ⓘ Two sensors (closer/NO) are required for each gripper, plus extension cables as an option.

ⓘ Please note the minimum permitted bending radii for the sensor cables, which are generally 35 mm.

## Cylindrical Reed Switches

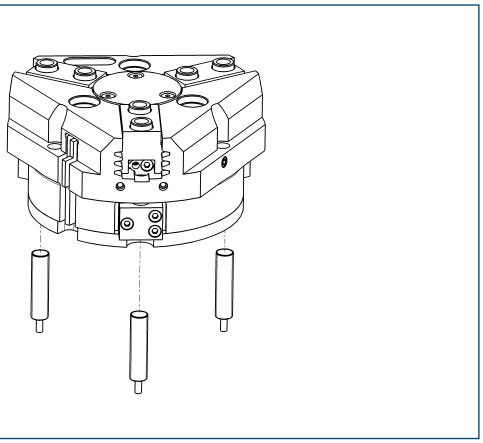

End position monitoring mounted with mounting kit

| Description | ID |
|---|---|
| Mounting kit for proximity switch | |
| AS-RMS 80 PGN/PZN-plus 160-380 | **0377727** |
| Reed Switches | |
| RMS 80-S-M8 | **0377721** |

ⓘ Two sensors (closer/NO) are required for each gripper, plus extension cables as an option.

ⓘ This mounting kit needs to be ordered optionally as an accessory.

ⓘ Please note the minimum permitted bending radii for the sensor cables, which are generally 35 mm.

You can find more detailed information and individual parts of the above-mentioned accessories in the “Accessories” catalog section.

## Analog position sensor

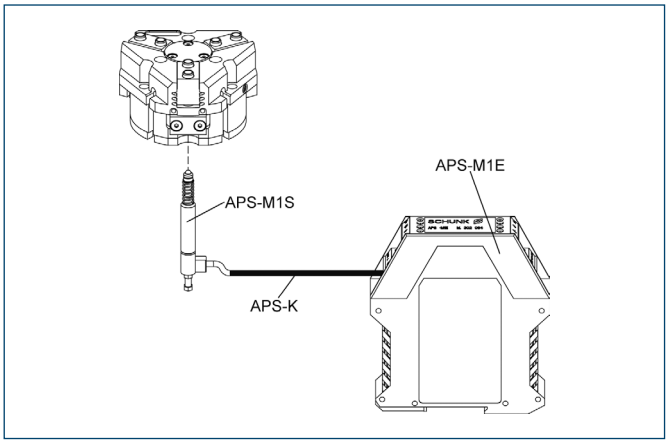


Analog multi position monitoring for any desired positions

| Description | ID |
|---|---|
| Mounting kit | |
| AS-APS-M1-300/1 | **0302088** |
| AS-APS-M1-300/2 | **0302089** |
| Connection cables | |
| APS-K0200 | **0302066** |
| APS-K0700 | **0302068** |
| Electronic Processor | |
| APS-M1E | **0302064** |
| Sensor | |
| APS-M1S | **0302062** |

ⓘ When using an APS system, for each gripper a mounting kit (AS-APS), an APS sensor (APS-M 1S, incl. 3 m cable) as well as an electronics (APS-M1e) are required.

ⓘ An extension cable (APS-K) can be connected between the sensor and the electronics as an option. The max. cable length between the sensor and the electronics is 10 m, between the electronics and their control unit (PLC) it is max. 1 m.

## Flexible Position Sensor

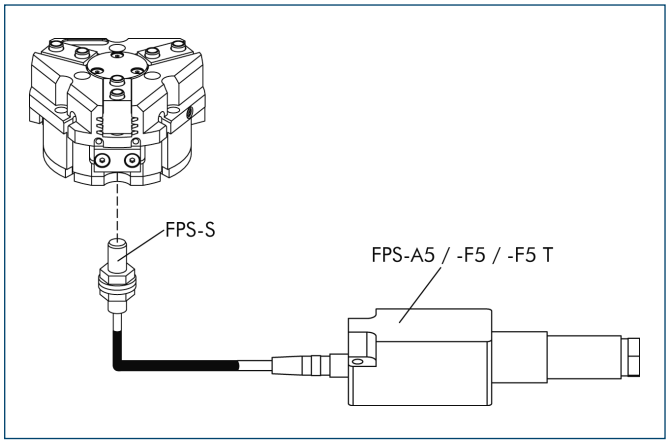


Flexible position monitoring of up to five positions

| Description | ID |
|---|---|
| Mounting kit for FPS | |
| AS-PGN/PZN-plus 300-2 | **0301642** |
| Electronic Processor | |
| FPS-F5 | **0301805** |
| FPS-F5 T | **0301807** |
| Sensor | |
| FPS-S M8 | **0301704** |

ⓘ When using a FPS system, a FPS sensor (FPS-S) and a control unit (FPS-F5 / F5 T or A5) are required for each gripper as well as a mounting kit (AS), if listed. Cable extensions (KV) are available as options in the “Accessories” catalog section.

You can find more detailed information and individual parts of the above-mentioned accessories in the “Accessories” catalog section.

# JGZ

**Pneumatic • 3-Finger Centric Gripper • Universal Gripper**

**Sizes**
40 ... 160

**Weight**
0.12 kg ... 8 kg

**Gripping force**
255 N ... 8480 N

**Stroke per finger**
2.5 mm ... 16 mm

**Workpiece weight**
1.25 kg ... 30 kg

## Application example

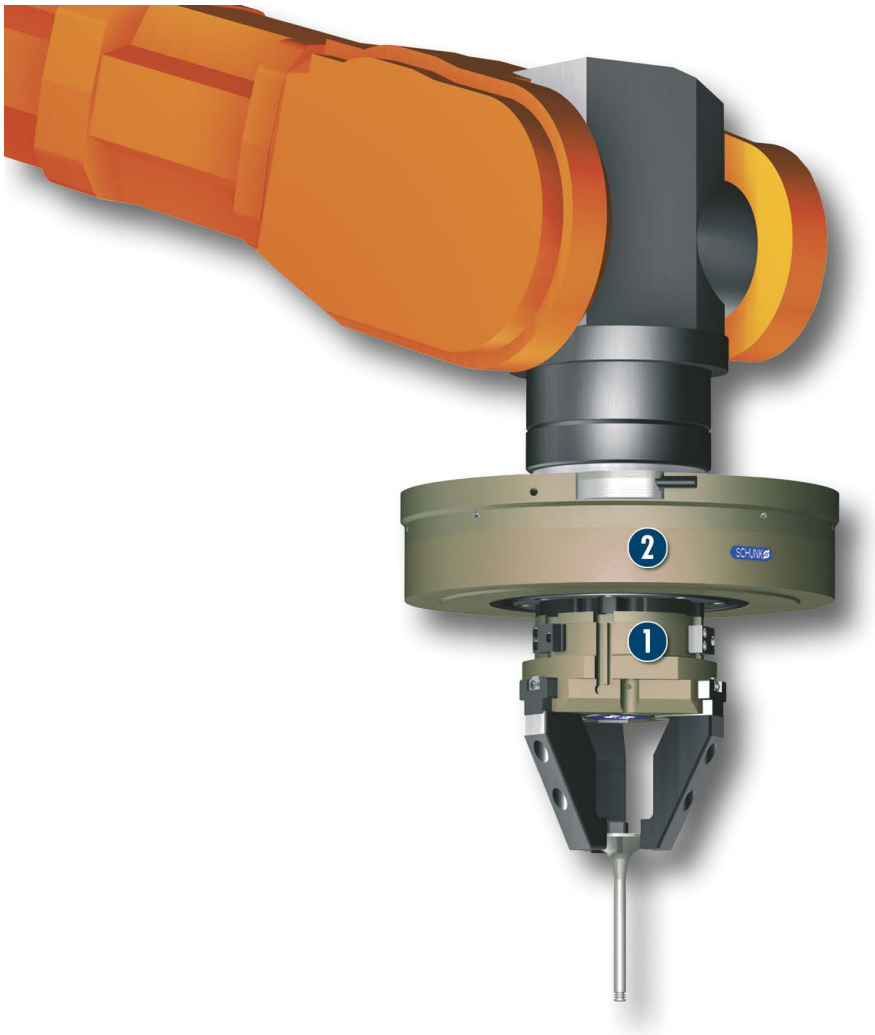


Tactile assembly of insertion aids in cylinder heads

1 3-Finger Centric Gripper JGZ with workpiece-specific gripper fingers

2 6-Axis Force/Torque Sensor FTC-050-80

## Universal Gripper
universal 3-Finger Concentric Gripper of the compact class with T-slot guidance and best cost-performance ratio

## Field of application
Optimum standard solution for many fields of application. Universal application in clean and slightly dirty surroundings in machine building and plant building industry, assembly and handling as well as automotive industry.




## Your advantages and benefits

**A firm focus on the essentials**
for maximum profitability

**Sturdy T-slot guidance**
for the precise handling of all kinds of workpieces

**Compact dimensions and low weight**
for minimal interfering contours in handling

**High maximum moments possible**
suitable for using long gripper fingers

**Wedge-hook design**
for high power transmission and synchronized gripping

**Comprehensive sensor accessories**
for interrogation and control of the stroke position

**Fastening at one gripper side in two screw directions**
for universal and flexible gripper assembly

**Air supply via hose-free direct connection or screw connections**
for the flexible supply of compressed air in all automation systems

## General note to the series

**Principle of function**
Wedge-hook kinematics

**Housing material**
Aluminum alloy, hard-anodized

**Base jaw material**
Steel

**Actuation**
pneumatic, with filtered compressed air (10 microns): dry, lubricated or non-lubricated
Pressure medium: Required quality class of compressed air according to DIN ISO 8573-1: 6 4 4

**Warranty**
24 months (details, general terms and conditions and operation manuals can be downloaded under www.schunk.com)

**Scope of delivery**
Brackets for proximity switches, centering sleeves, O-rings for direct connection, assembly and operating manual with manufacturer's declaration

**Gripping force maintenance device**
with either mechanical gripping force maintenance or SDV-P pressure maintenance valve

## Sectional diagram

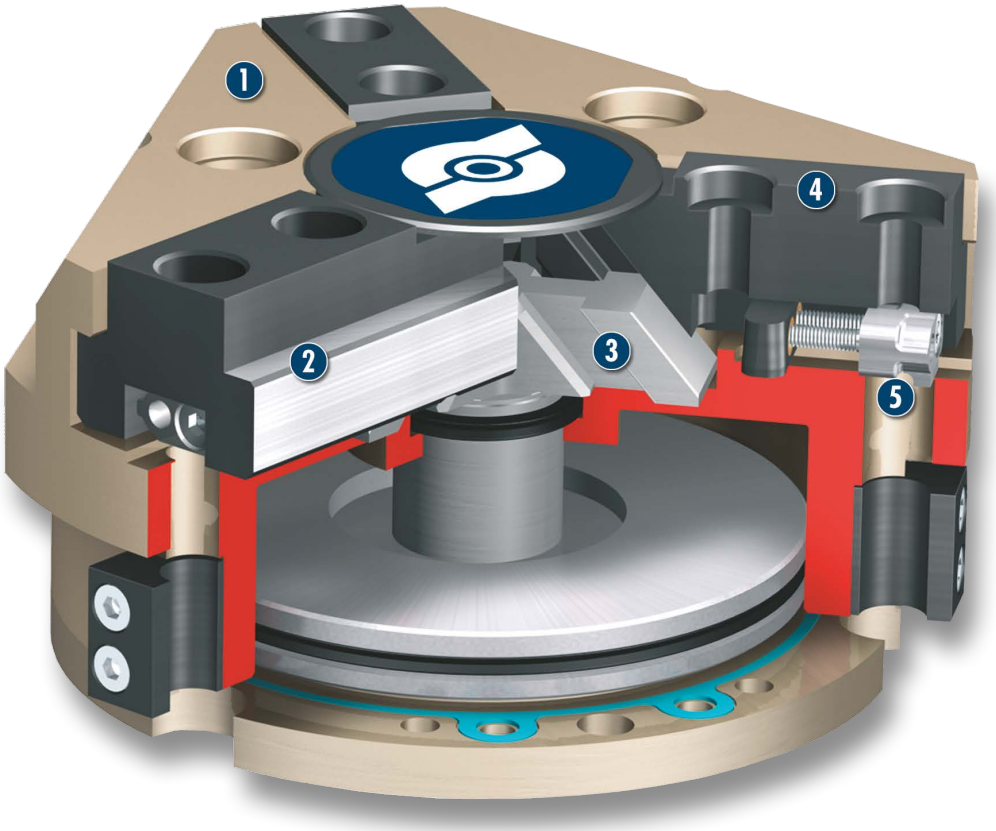


**1 Housing**
weight-optimized through application of hard-anodized, high-strength aluminum alloy

**2 T-slot guidance**
loadable, robust base jaw guidance for extremely long gripper fingers

**3 Wedge-hook design**
for high power transmission and centric gripping

**4 Base jaw**
for the connection of workpiece-specific gripper fingers

**5 Sensor system**
Proximity switch can be assembled without mounting kit

## Functional description

The piston is moved up and down by compressed air.
Through its angled active surfaces, the wedge hook transforms this movement into the lateral, synchronous gripping movement of both base jaws.

## Options and special information

The JGZ series is especially suitable for economic handling solutions and distinguishes by its high cost-benefit ratio.

## Accessories

Accessories from SCHUNK – the suitable supplement for maximum functionality, reliability and performance of all automation modules.

### Tolerance compensation unit



### Compensation unit



### Magnetic Switches



### Inductive proximity switches



### Universal intermediate jaw



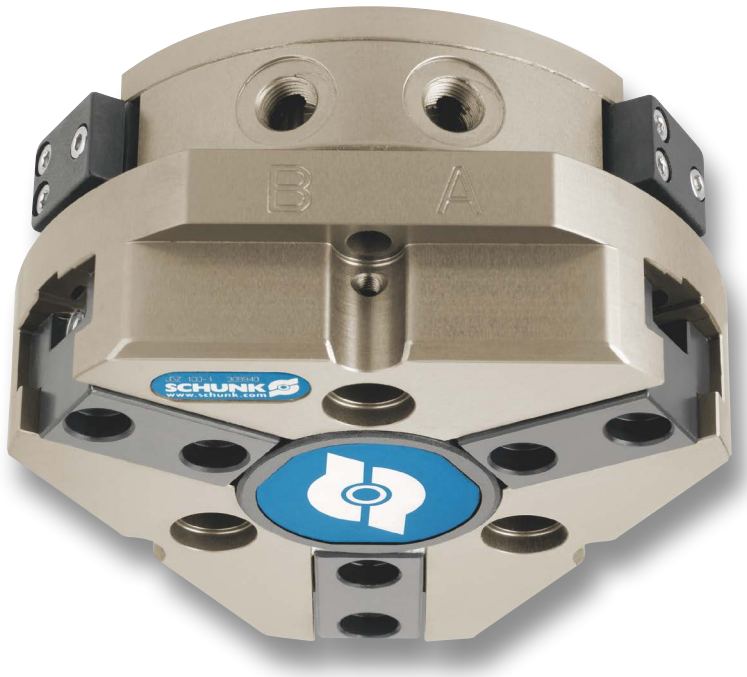

### Sensor Distributor

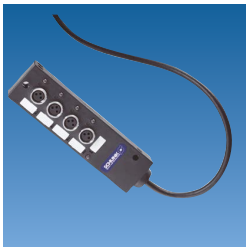

### Quick-change Jaw System



### Flexible Position Sensor

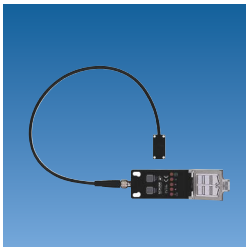

### Pressure maintenance valve



### Finger blanks



### Force measuring jaws



### Analog position sensor

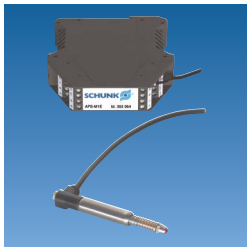

ⓘ For the exact size of the required accessories, availability of this size and the designation and ID, please refer to the additional views at the end of the size in question. You will find more detailed information on our accessory range in the “Accessories” catalog section.

## General note to the series

### Gripping force

is the arithmetic total of the gripping force applied to each finger at distance P (see illustration) measured from the upper edge of the gripper.

### Finger length

The finger length is measured from the upper edge of the gripper housing in the direction of the main axis.

### Repeat accuracy

is defined as the spread of the limit position after 100 consecutive strokes.

### Workpiece weight

The recommended workpiece weight is calculated for a force-type connection with a coefficient of friction of 0.1 and a safety factor of 2 against slippage of the workpiece on acceleration due to gravity g. Considerably heavier workpiece weights are permitted with form-fit gripping.

### Closing and opening times

Closing and opening times are purely the times that the base jaws or fingers are in motion. Valve switching times, hose filling times or PLC reaction times are not included in the above times and must be taken into consideration when determining cycle times.

# JGZ 40

**Pneumatic • 3-Finger Centric Gripper • Universal Gripper**



## Gripping force, I.D. gripping

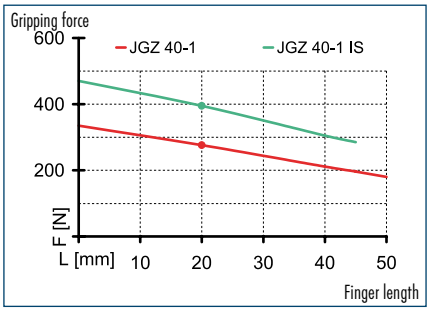


## Gripping force, O.D. gripping

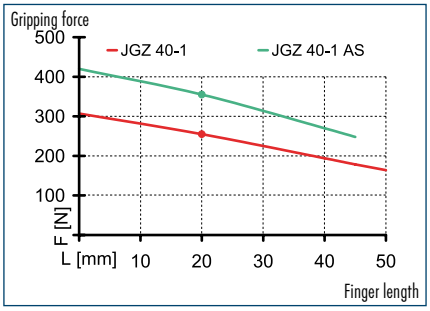


## Finger load

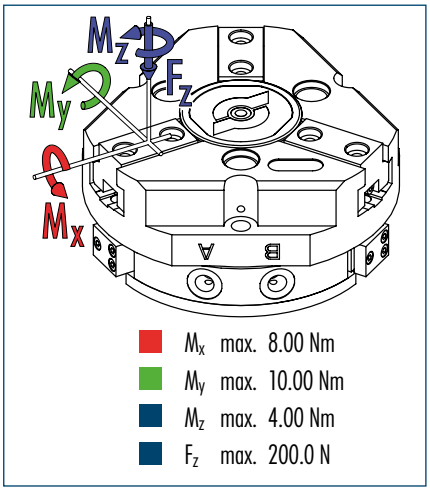


ⓘ The indicated moments and forces are static values, apply per base jaw and may occur simultaneously. $M_y$ may arise in addition to the moment generated by the gripping force itself. If the max. permitted finger weight is exceeded, it is imperative to throttle the air pressure so that the jaw movement occurs without any hitting or bouncing. Service life may be reduced.

## Technical data

| Description | | JGZ 40-1 | JGZ 40-1 AS | JGZ 40-1 IS |
|---|---|---|---|---|
| **ID** | | **0308900** | **0308901** | **0308902** |
| Stroke per finger | [mm] | 2.5 | 2.5 | 2.5 |
| Closing force | [N] | 255 | 355 | |
| Opening force | [N] | 270 | | 370 |
| Min. spring force | [N] | | 100 | 100 |
| Weight | [kg] | 0.12 | 0.15 | 0.15 |
| Recommended workpiece weight | [kg] | 1.25 | 1.25 | 1.25 |
| Air consumption per double stroke | [cm³] | 5 | 9 | 9 |
| Min./max. operating pressure | [bar] | 2/8 | 4/6.5 | 4/6.5 |
| Nominal operating pressure | [bar] | 6 | 6 | 6 |
| Closing/opening time | [s] | 0.02/0.03 | 0.02/0.04 | 0.02/0.02 |
| Max. permitted finger length | [mm] | 50 | 45 | 45 |
| Max. permitted weight per finger | [kg] | 0.1 | 0.1 | 0.1 |
| IP class | | 40 | 40 | 40 |
| Min./max. ambient temperature | [°C] | -10/90 | -10/90 | -10/90 |
| Repeat accuracy | [mm] | 0.01 | 0.01 | 0.01 |
| Cleanroom class ISO-classification 14644-1 | | 5 | 5 | 5 |

## Main view

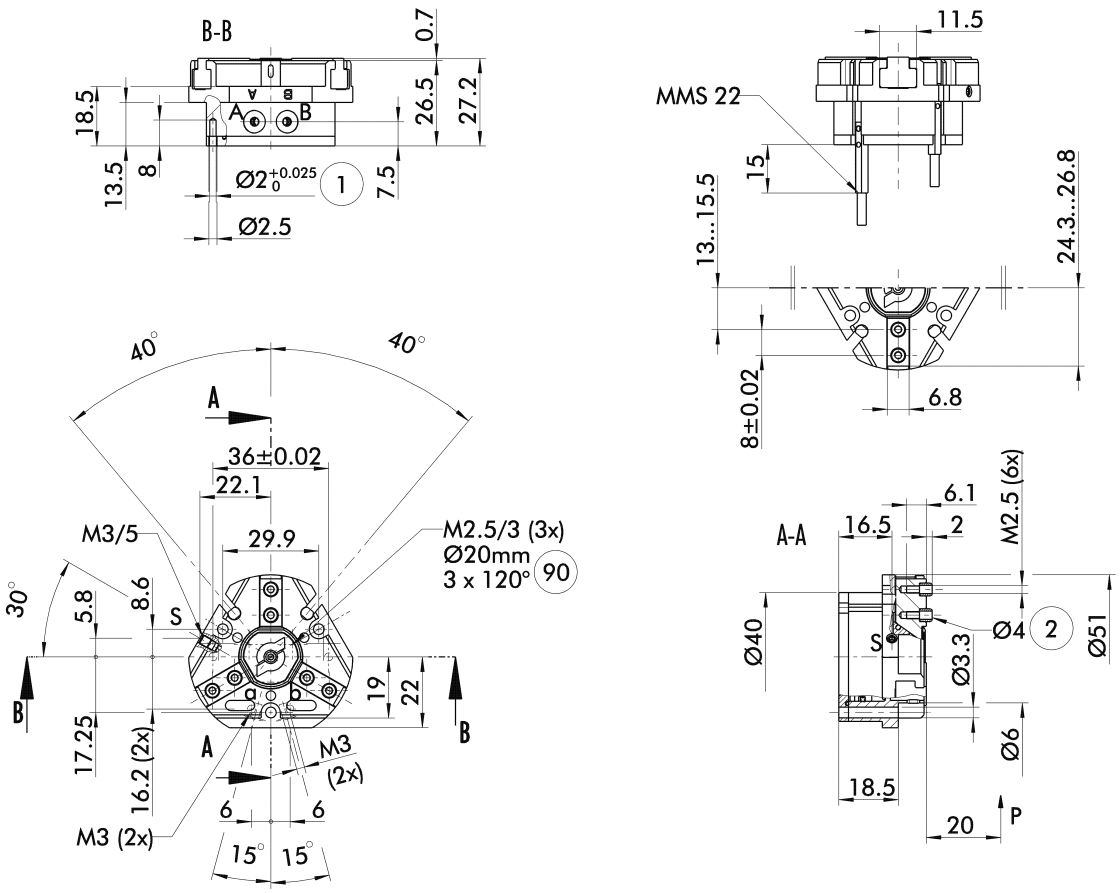


The drawing shows the gripper in the basic version with closed jaws, the dimensions do not include the options described below.

ⓘ The SDV-P pressure maintenance valve can also be used for I.D. or O.D. gripping alternatively or in addition to the spring-loaded, mechanical gripping force maintenance device (see "Accessories" catalog section).

A, a Main/direct connection, gripper opening
B, b Main/direct connection, gripper closing
① Gripper connection
② Finger connection
⑨⓪ Thread below the cover for fastening external attachments

## Hose-free direct connection

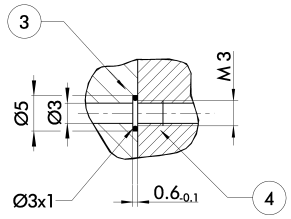


③ Adapter
④ Gripper

The direct connection is used for supplying compressed air without hoses. Instead, the pressure medium is fed through bore-holes in the mounting plate.

## AS/IS gripping force maintenance device

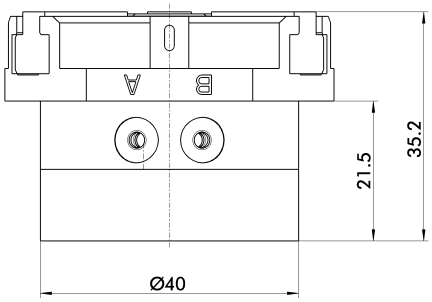


The mechanical gripping force maintenance device ensures a minimum gripping force even in case of pressure drop. This acts as closing force in the AS version, and as opening force in the IS version. In addition, the gripping force maintenance device can also be used for increasing the gripping force or for single-acting gripping.

## Modular Assembly Automation

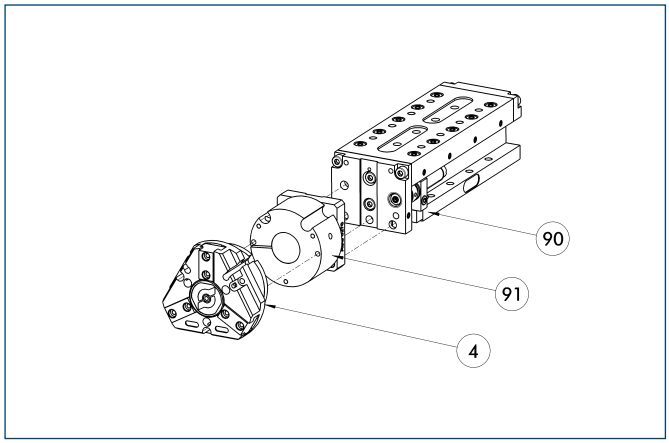


④ Gripper
⑨⓪ CLM
⑨① ASG

This gripper can be combined with the standard linear modules LM, KLM, CLM and ELM of the GEMOTEC modular system. For more information see our main catalog "Modular Assembly Automation".

## Spring-loaded pressure piece

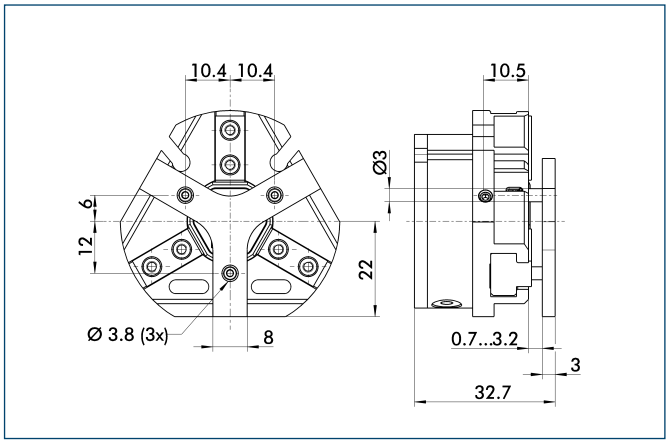


For spring-supported positioning of the workpiece against a stop after the gripper has opened. Especially developed for loading machines.

| Description | ID | Stroke | Min. force |
|---|---|---|---|
| Spring-loaded pressure piece | | | |
| A-PZN-plus 40 | **0303718** | 2.5 mm | 5 N |

## Universal intermediate jaw

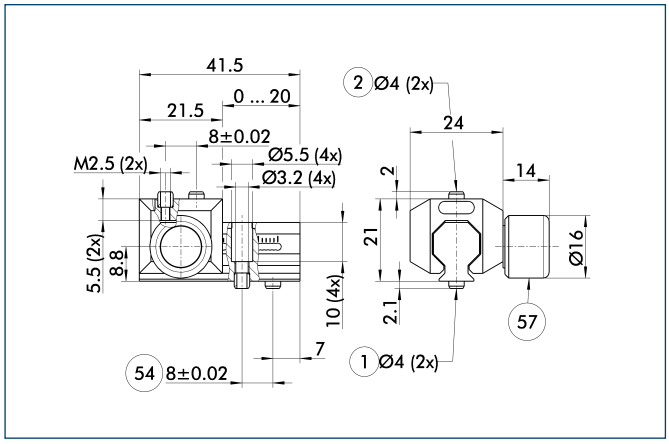


① Gripper connection
② Finger connection
⑤④ Optional right or left connection
⑤⑦ Locking

The universal intermediate jaw allows fast tool-free and reliable plugging and shifting of top jaws at the gripper.

| Description | ID | Grid dimension |
|---|---|---|
| Universal intermediate jaw | | |
| UZB 40 | **0300040** | 1 mm |

## Finger blanks

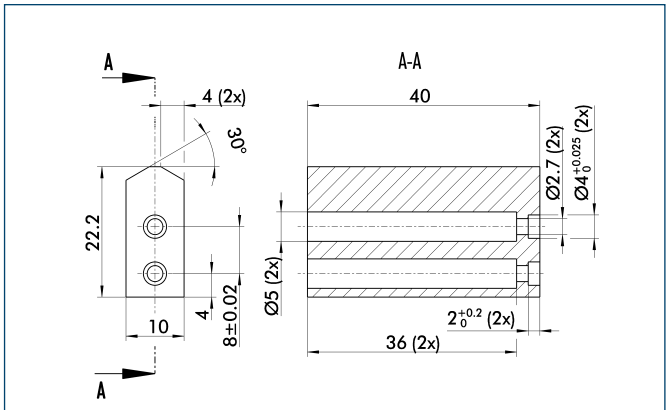


Finger blanks for customized subsequent machining

| Description | ID | Material | Scope of delivery |
|---|---|---|---|
| Finger blanks | | | |
| ABR-plus 40 | **0300008** | Aluminum | 1 |
| SBR-plus 40 | **0300018** | 16 MnCr 5 | 1 |

You can find more detailed information and individual parts of the above-mentioned accessories in the "Accessories" catalog section.

## Compensation unit with spring reset

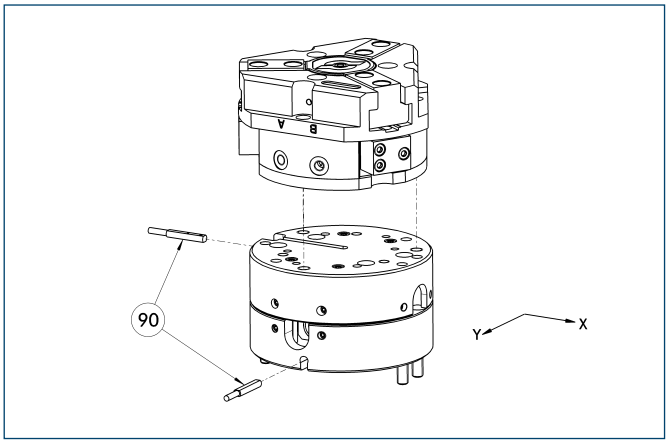


(90) Monitoring

Grippers can be directly mounted without using an adapter plate. For details see our catalog “Robot Accessories”.

| Description | ID | Compensation travel | Reset force |
|---|---|---|---|
| Compensation unit | | | |
| AGE-F-XY-031-1 | **0324900** | ±1.5 mm | 1 N |
| AGE-F-XY-031-2 | **0324901** | ±1.5 mm | 2.5 N |
| AGE-F-XY-031-3 | **0324902** | ±1.5 mm | 3.3 kN |

## Programmable magnetic switch

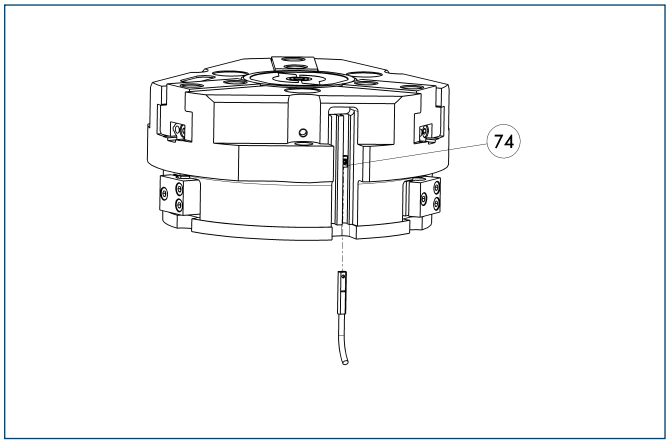


(74) Stop for MMS-P

Position monitoring with two programmable positions per sensor. The end position monitoring is mounted in the C-slot.

| Description | ID | Recommended product |
|---|---|---|
| Programmable magnetic switch | | |
| MMS-P 22-S-M8-PNP | **0301370** | • |
| MMSK-P 22-S-PNP | **0301371** | |
| Connection cables | | |
| KA BG08-L 4P-0500 | **0307767** | |
| KA BG08-L 4P-1000 | **0307768** | |
| KA BW08-L 4P-0500 | **0307765** | |
| KA BW08-L 4P-1000 | **0307766** | |
| Sensor Distributor | | |
| V2-M8-4P-2XM8-3P | **0301380** | |

ⓘ Please note the minimum permitted bending radii for the sensor cables, which are generally 35 mm.
ⓘ Per gripper one sensor (closer/NO) is required, optionally a cable extension.

You can find more detailed information and individual parts of the above-mentioned accessories in the “Accessories” catalog section.

## Electronic magnetic switches

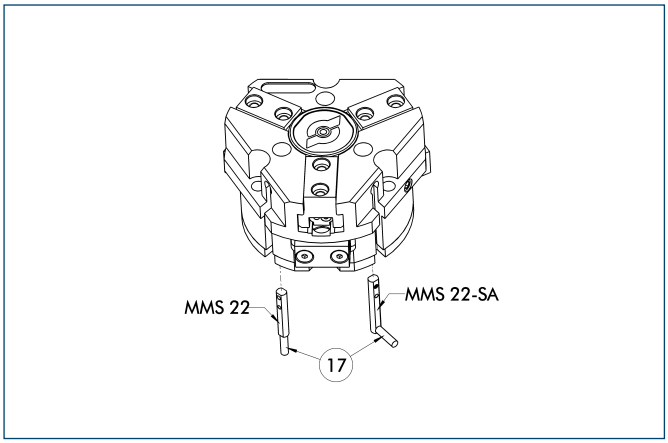


⑰ Cable outlet

End position monitoring for mounting in the C-slot

| Description | ID | Recommended product |
|---|---|---|
| Electronic magnetic switches | | |
| MMS 22-S-M5-PNP | 0301438 | |
| MMS 22-S-M5-NPN | 0301439 | |
| MMS 22-S-M8-PNP | 0301432 | • |
| MMS 22-S-M8-NPN | 0301433 | |
| MMSK 22-S-PNP | 0301434 | |
| MMSK 22-S-NPN | 0301435 | |
| Electronic magnetic switches with lateral cable outlet | | |
| MMS 22-S-M5-PNP-SA | 0301448 | |
| MMS 22-S-M5-NPN-SA | 0301449 | |
| MMS 22-S-M8-PNP-SA | 0301442 | • |
| MMS 22-S-M8-NPN-SA | 0301443 | |
| MMSK 22-S-PNP-SA | 0301444 | |
| MMSK 22-S-NPN-SA | 0301445 | |
| Connection cables | | |
| KA BG05-L 3P-0300 | 0301652 | |
| KA BG08-L 3P-0300-PNP | 0301622 | |
| KA BG08-L 3P-0500-PNP | 0301623 | |
| KA BW05-L 3P-0300 | 0301650 | |
| KA BW08-L 3P-0300-NPN | 0301602 | |
| KA BW08-L 3P-0300-PNP | 0301594 | |
| KA BW08-L 3P-0500-NPN | 9641116 | |
| KA BW08-L 3P-0500-PNP | 0301502 | |
| Cable extensions | | |
| KV BW08-SG08 3P-0030-PNP | 0301495 | |
| KV BW08-SG08 3P-0100-PNP | 0301496 | |
| KV BW08-SG08 3P-0200-PNP | 0301497 | |

ⓘ Two sensors (closer/NO) are required for each gripper, plus extension cables as an option.

ⓘ Please note the minimum permitted bending radii for the sensor cables, which are generally 35 mm.

You can find more detailed information and individual parts of the above-mentioned accessories in the “Accessories” catalog section.

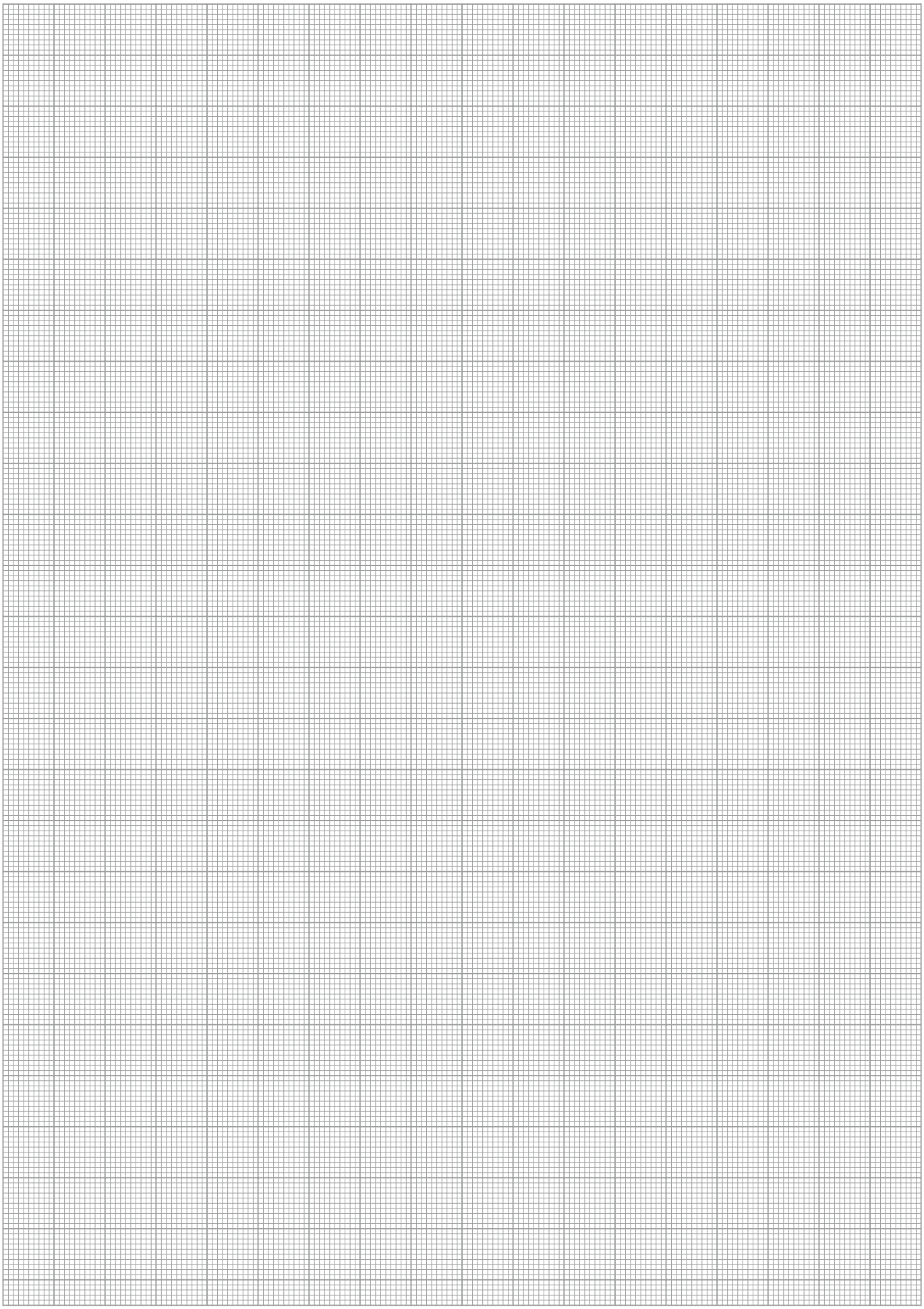

# JGZ 50

**Pneumatic • 3-Finger Centric Gripper • Universal Gripper**



## Gripping force, I.D. gripping

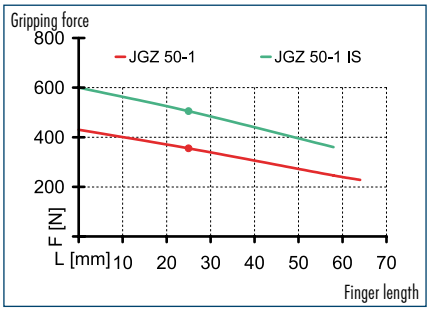


## Gripping force, O.D. gripping

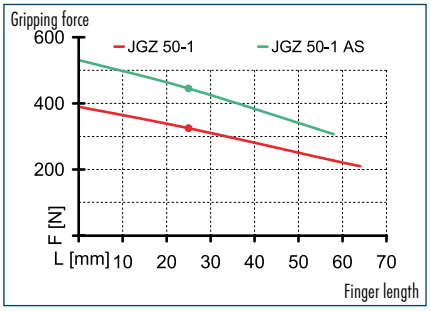


## Finger load

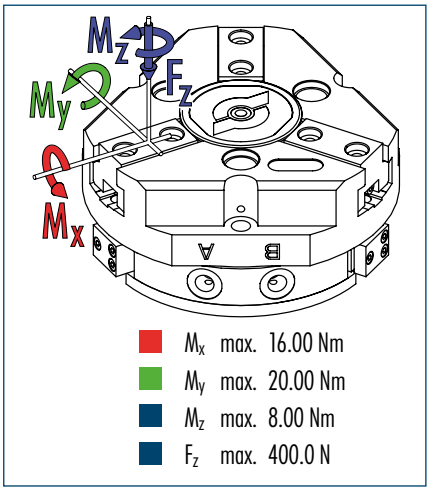


ⓘ The indicated moments and forces are static values, apply per base jaw and may occur simultaneously. $M_y$ may arise in addition to the moment generated by the gripping force itself. If the max. permitted finger weight is exceeded, it is imperative to throttle the air pressure so that the jaw movement occurs without any hitting or bouncing. Service life may be reduced.

## Technical data

| Description | | JGZ 50-1 | JGZ 50-1 AS | JGZ 50-1 IS |
|---|---|---|---|---|
| **ID** | | **0308910** | **0308911** | **0308912** |
| Stroke per finger | [mm] | 4 | 4 | 4 |
| Closing force | [N] | 325 | 445 | |
| Opening force | [N] | 355 | | 505 |
| Min. spring force | [N] | | 120 | 150 |
| Weight | [kg] | 0.25 | 0.3 | 0.3 |
| Recommended workpiece weight | [kg] | 1.6 | 1.6 | 1.6 |
| Air consumption per double stroke | [cm³] | 9 | 18 | 18 |
| Min./max. operating pressure | [bar] | 2/8 | 4/6.5 | 4/6.5 |
| Nominal operating pressure | [bar] | 6 | 6 | 6 |
| Closing/opening time | [s] | 0.03/0.03 | 0.02/0.04 | 0.04/0.02 |
| Max. permitted finger length | [mm] | 64 | 58 | 58 |
| Max. permitted weight per finger | [kg] | 0.18 | 0.18 | 0.18 |
| IP class | | 40 | 40 | 40 |
| Min./max. ambient temperature | [°C] | -10/90 | -10/90 | -10/90 |
| Repeat accuracy | [mm] | 0.01 | 0.01 | 0.01 |
| Cleanroom class ISO-classification 14644-1 | | 5 | 5 | 5 |

## Main view

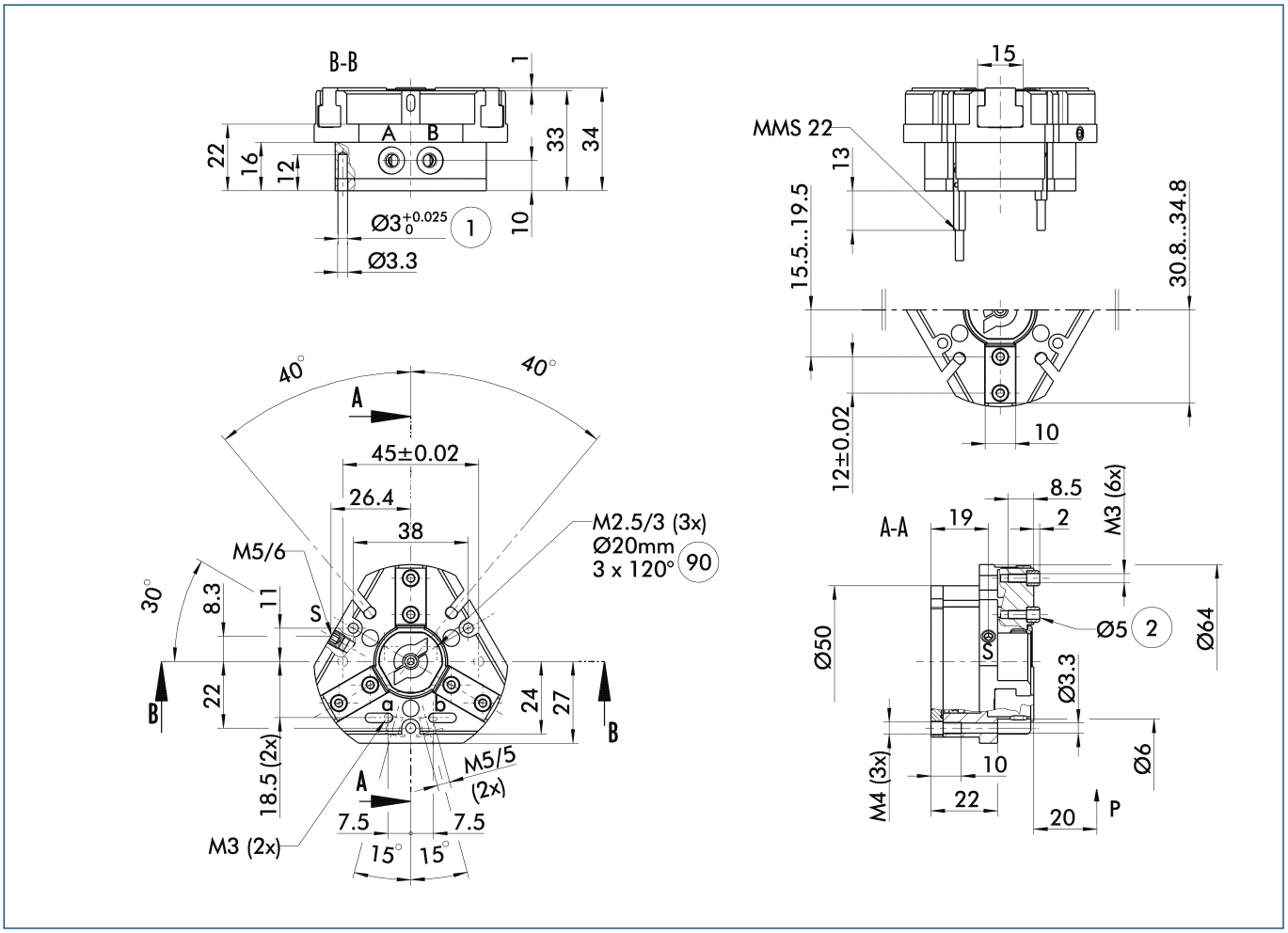


The drawing shows the gripper in the basic version with closed jaws, the dimensions do not include the options described below.

ⓘ The SDV-P pressure maintenance valve can also be used for I.D. or O.D. gripping alternatively or in addition to the spring-loaded, mechanical gripping force maintenance device (see "Accessories" catalog section).

A, a Main/direct connection, gripper opening
B, b Main/direct connection, gripper closing
① Gripper connection
② Finger connection
⑨⓪ Thread below the cover for fastening external attachments

## Hose-free direct connection

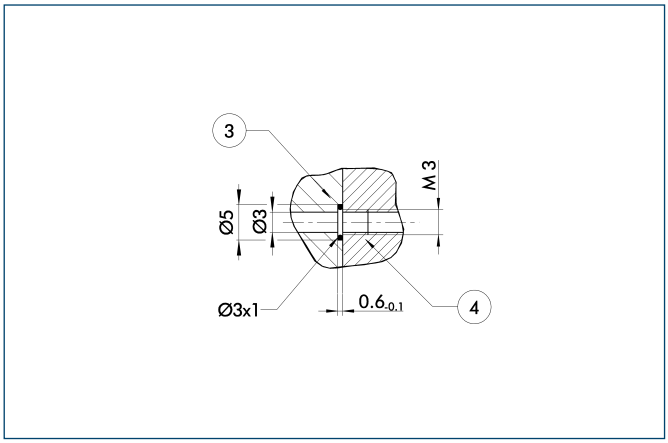


③ Adapter
④ Gripper

The direct connection is used for supplying compressed air without hoses. Instead, the pressure medium is fed through bore-holes in the mounting plate.

## AS/IS gripping force maintenance device

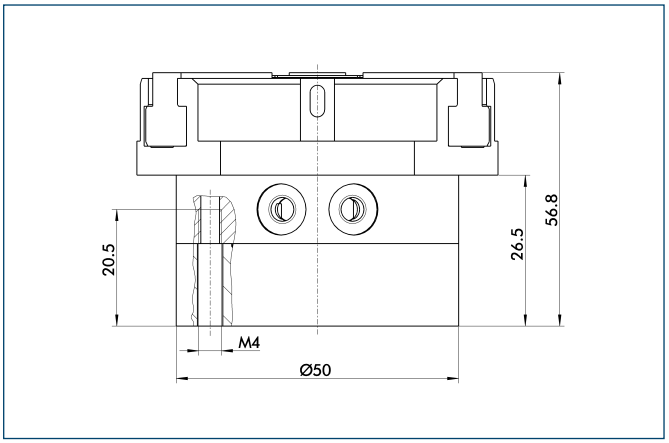


The mechanical gripping force maintenance device ensures a minimum gripping force even in case of pressure drop. This acts as closing force in the AS version, and as opening force in the IS version. In addition, the gripping force maintenance device can also be used for increasing the gripping force or for single-acting gripping.

## Modular Assembly Automation

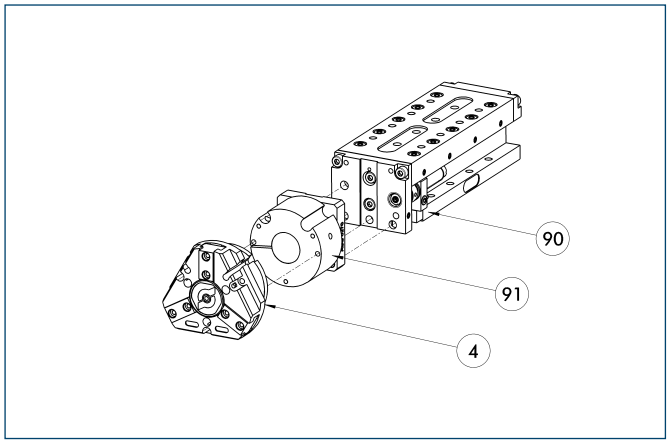


④ Gripper
⑨⓪ CLM
⑨① ASG

This gripper can be combined with the standard linear modules LM, KLM, CLM and ELM of the GEMOTEC modular system. For more information see our main catalog "Modular Assembly Automation".

## Spring-loaded pressure piece

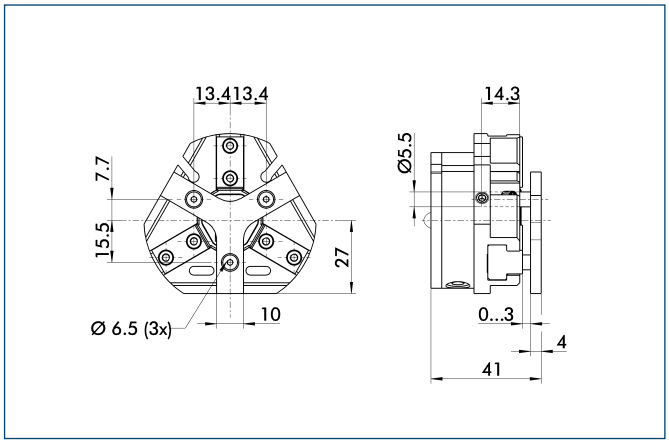


For spring-supported positioning of the workpiece against a stop after the gripper has opened. Especially developed for loading machines.

| Description | ID | Stroke | Min. force |
|---|---|---|---|
| Spring-loaded pressure piece | | | |
| A-PZN-plus 50 | **0303719** | 3 mm | 12 N |

## Quick-change Jaw System

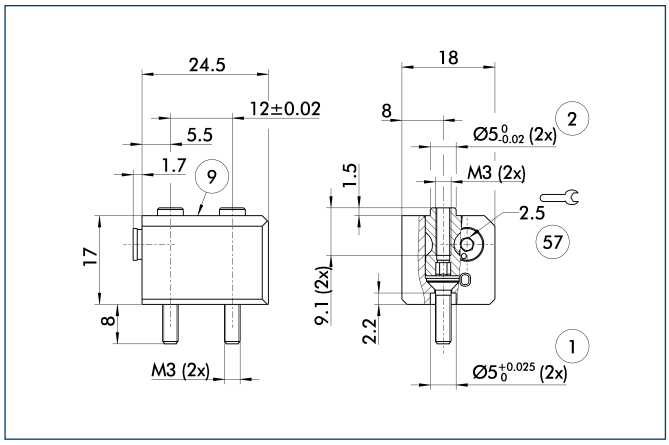


① Gripper connection
② Finger connection
⑨ For mounting screw connection diagram, see basic version
⑤⑦ Locking

The BSWS quick-change jaw system enables top jaws to be changed on the gripper manually and rapidly. An adapter (BSWS-A) and a base (BSWS-B) are required for each gripper jaw.
For a reverse assembly without height set-up, one adapter (BSWS-A) and a kit (BSWS-U) per gripper jaw are required. Another effect of the BSWS-U is, that there are no disturbing fastening bores in the finger contour.

| Description | ID |
|---|---|
| Quick-change Jaw System adapter | |
| BSWS-A 50 | **0303020** |
| Quick-change Jaw System base | |
| BSWS-B 50 | **0303021** |
| Quick-change Jaw System reversed | |
| BSWS-U 50 | **0303040** |

## Universal intermediate jaw

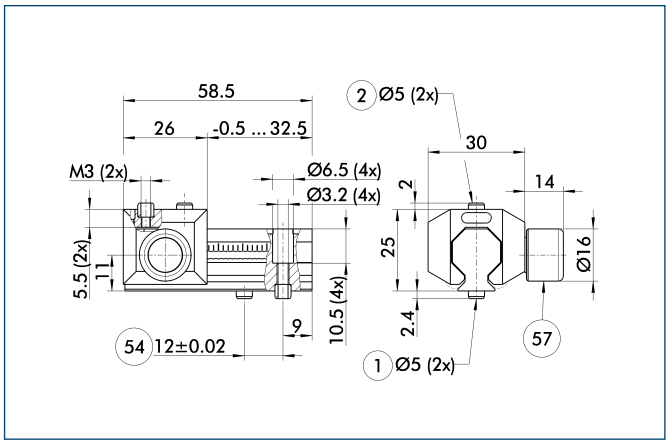


① Gripper connection
② Finger connection
⑤④ Optional right or left connection
⑤⑦ Locking

The universal intermediate jaw allows fast tool-free and reliable plugging and shifting of top jaws at the gripper.

| Description | ID | Grid dimension |
|---|---|---|
| Universal intermediate jaw | | |
| UZB 50 | **0300041** | 1.5 mm |

You can find more detailed information and individual parts of the above-mentioned accessories in the "Accessories" catalog section.

## Force measuring jaws

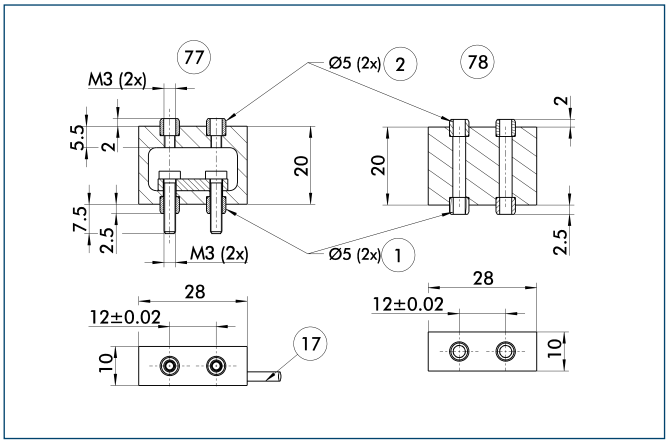


① Gripper connection
② Finger connection
⑰ Cable outlet
⑦⑦ Active intermediate jaws
⑦⑧ Passive intermediate jaws

Force measuring jaws measure gripping forces, but can also determine workpiece weights or dimensional deviations. There are active and passive intermediate jaws (FMS-ZBA or FMS-ZBP). At least one active force measuring jaw is required per gripper, the rest can be passive. For each active jaw, a FMS-A1 control unit and a FMS-A connection cable are required.

| Description | ID |
|---|---|
| Active intermediate jaws | |
| FMS-ZBA 50 | **0301830** |
| Passive intermediate jaws | |
| FMS-ZBP 50 | **0301831** |
| Electronic Processor | |
| FMS-A1 | **0301810** |
| Connection cables | |
| FMS-AK0200 | **0301820** |
| FMS-AK0500 | **0301821** |
| FMS-AK1000 | **0301822** |
| FMS-AK2000 | **0301823** |

## Finger blanks

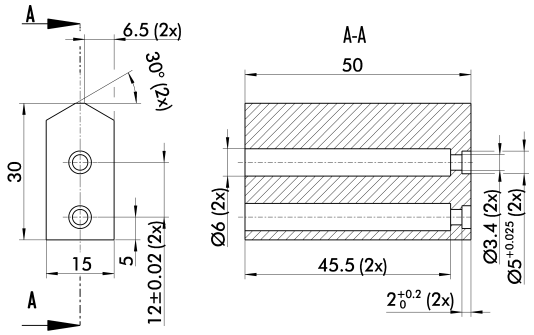


Finger blanks for customized subsequent machining

| Description | ID | Material | Scope of delivery |
|---|---|---|---|
| Finger blanks | | | |
| ABR-plus 50 | **0300009** | Aluminum | 1 |
| SBR-plus 50 | **0300019** | 16 MnCr 5 | 1 |

You can find more detailed information and individual parts of the above-mentioned accessories in the “Accessories” catalog section.

## Tolerance compensation unit

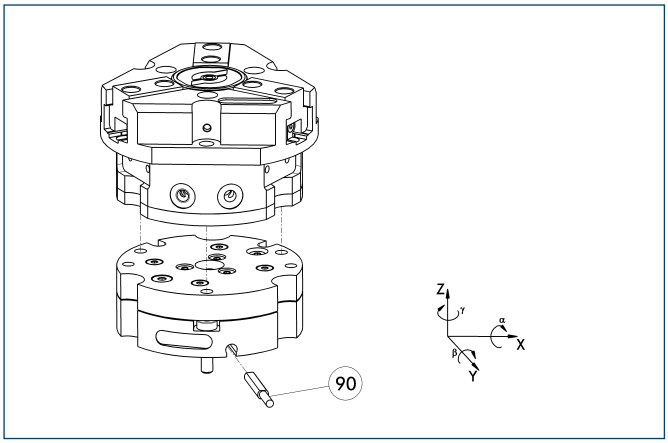


(90) Monitoring of locking

Grippers can be directly mounted without an adapter plate. Tolerance compensation unit and gripper have an identical screw connection diagram. Therefore the tolerance compensation units can be assembled later. Please consider the additional assembly height of the tolerance compensation unit. For details see catalog “Robot Accessories”.

| Description | ID | Locking | Deflection |
|---|---|---|---|
| Compensation unit | | | |
| TCU-050-3-OV-Z | **0324749** | No | |

## Compensation unit with spring reset

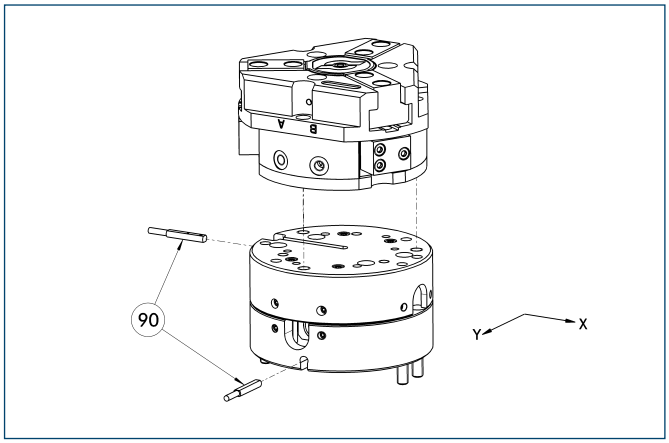


(90) Monitoring

Grippers can be directly mounted without using an adapter plate. For details see our catalog “Robot Accessories”.

| Description | ID | Compensation travel | Reset force |
|---|---|---|---|
| Compensation unit | | | |
| AGE-F-XY-040-1 | **0324920** | ±2 mm | 1 N |
| AGE-F-XY-040-2 | **0324921** | ±2 mm | 2.5 N |
| AGE-F-XY-040-3 | **0324922** | ±2 mm | 3.3 N |

## Programmable magnetic switch

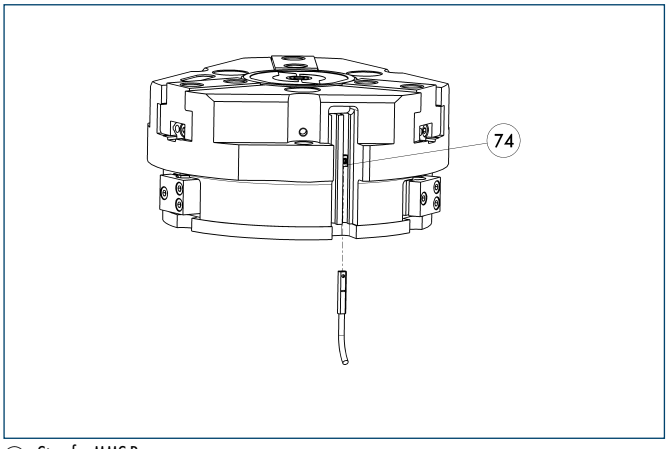


(74) Stop for MMS-P

Position monitoring with two programmable positions per sensor. The end position monitoring is mounted in the C-slot.

| Description | ID | Recommended product |
|---|---|---|
| Programmable magnetic switch | | |
| MMS-P 22-S-M8-PNP | **0301370** | • |
| MMSK-P 22-S-PNP | **0301371** | |
| Connection cables | | |
| KA BG08-L 4P-0500 | **0307767** | |
| KA BG08-L 4P-1000 | **0307768** | |
| KA BW08-L 4P-0500 | **0307765** | |
| KA BW08-L 4P-1000 | **0307766** | |
| Sensor Distributor | | |
| V2-M8-4P-2XM8-3P | **0301380** | |

ⓘ Please note the minimum permitted bending radii for the sensor cables, which are generally 35 mm.

ⓘ Per gripper one sensor (closer/NO) is required, optionally a cable extension.

## Electronic magnetic switches

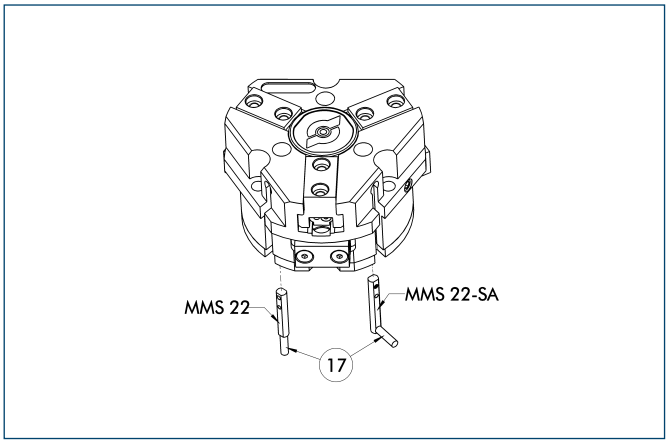


⑰ Cable outlet

End position monitoring for mounting in the C-slot

| Description | ID | Recommended product |
|---|---|---|
| Electronic magnetic switches | | |
| MMS 22-S-M5-PNP | **0301438** | |
| MMS 22-S-M5-NPN | **0301439** | |
| MMS 22-S-M8-PNP | **0301432** | • |
| MMS 22-S-M8-NPN | **0301433** | |
| MMSK 22-S-PNP | **0301434** | |
| MMSK 22-S-NPN | **0301435** | |
| Electronic magnetic switches with lateral cable outlet | | |
| MMS 22-S-M5-PNP-SA | **0301448** | |
| MMS 22-S-M5-NPN-SA | **0301449** | |
| MMS 22-S-M8-PNP-SA | **0301442** | • |
| MMS 22-S-M8-NPN-SA | **0301443** | |
| MMSK 22-S-PNP-SA | **0301444** | |
| MMSK 22-S-NPN-SA | **0301445** | |
| Connection cables | | |
| KA BG05-L 3P-0300 | **0301652** | |
| KA BG08-L 3P-0300-PNP | **0301622** | |
| KA BG08-L 3P-0500-PNP | **0301623** | |
| KA BW05-L 3P-0300 | **0301650** | |
| KA BW08-L 3P-0300-NPN | **0301602** | |
| KA BW08-L 3P-0300-PNP | **0301594** | |
| KA BW08-L 3P-0500-NPN | **9641116** | |
| KA BW08-L 3P-0500-PNP | **0301502** | |
| Cable extensions | | |
| KV BW08-SG08 3P-0030-PNP | **0301495** | |
| KV BW08-SG08 3P-0100-PNP | **0301496** | |
| KV BW08-SG08 3P-0200-PNP | **0301497** | |

ⓘ Two sensors (closer/NO) are required for each gripper, plus extension cables as an option.

ⓘ Please note the minimum permitted bending radii for the sensor cables, which are generally 35 mm.

You can find more detailed information and individual parts of the above-mentioned accessories in the “Accessories” catalog section.

# JGZ 64

**Pneumatic • 3-Finger Centric Gripper • Universal Gripper**



## Gripping force, I.D. gripping

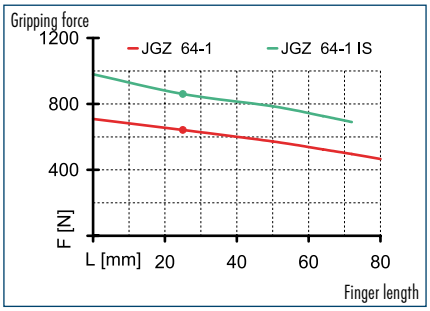


## Gripping force, O.D. gripping

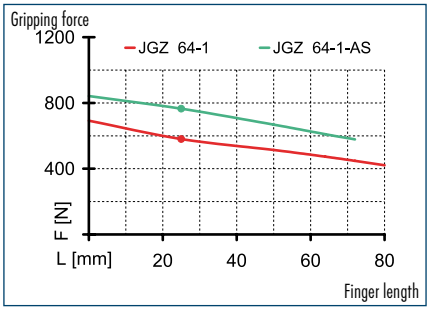


## Finger load

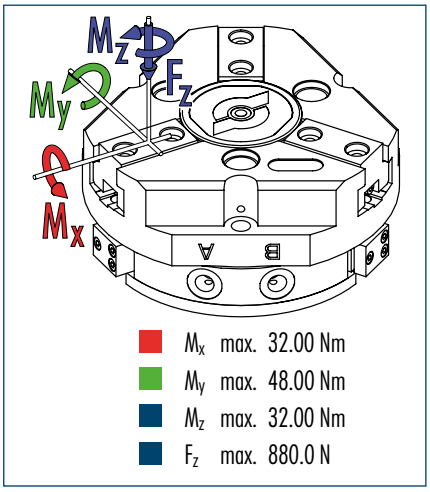


ⓘ The indicated moments and forces are static values, apply per base jaw and may occur simultaneously. $M_y$ may arise in addition to the moment generated by the gripping force itself. If the max. permitted finger weight is exceeded, it is imperative to throttle the air pressure so that the jaw movement occurs without any hitting or bouncing. Service life may be reduced.

## Technical data

| Description | | JGZ 64-1 | JGZ 64-1-AS | JGZ 64-1-IS |
|---|---|---|---|---|
| **ID** | | **0308920** | **0308921** | **0308922** |
| Stroke per finger | [mm] | 6 | 6 | 6 |
| Closing force | [N] | 580 | 765 | |
| Opening force | [N] | 640 | | 860 |
| Min. spring force | [N] | | 185 | 220 |
| Weight | [kg] | 0.43 | 0.54 | 0.54 |
| Recommended workpiece weight | [kg] | 2.9 | 2.9 | 2.9 |
| Air consumption per double stroke | [cm³] | 25 | 25 | 25 |
| Min./max. operating pressure | [bar] | 2/8 | 4/6.5 | 4/6.5 |
| Nominal operating pressure | [bar] | 6 | 6 | 6 |
| Closing/opening time | [s] | 0.03/0.03 | 0.02/0.04 | 0.04/0.02 |
| Max. permitted finger length | [mm] | 80 | 72 | 72 |
| Max. permitted weight per finger | [kg] | 0.35 | 0.35 | 0.35 |
| IP class | | 40 | 40 | 40 |
| Min./max. ambient temperature | [°C] | -10/90 | -10/90 | -10/90 |
| Repeat accuracy | [mm] | 0.01 | 0.01 | 0.01 |
| Cleanroom class ISO-classification 14644-1 | | 5 | 5 | 5 |

## Main view

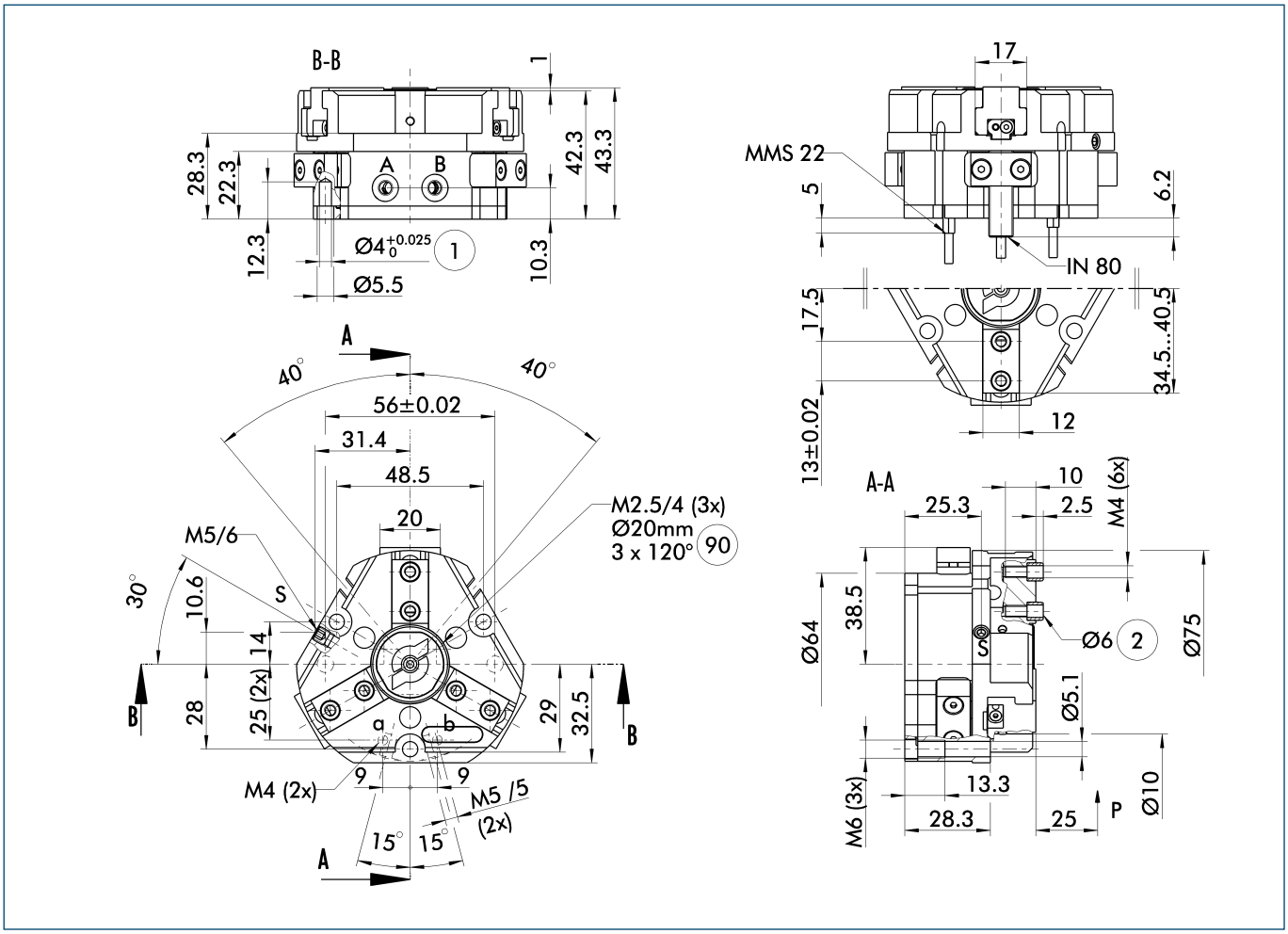


The drawing shows the gripper in the basic version with closed jaws, the dimensions do not include the options described below.

ⓘ The SDV-P pressure maintenance valve can also be used for I.D. or O.D. gripping alternatively or in addition to the spring-loaded, mechanical gripping force maintenance device (see "Accessories" catalog section).

A, a Main/direct connection, gripper opening
B, b Main/direct connection, gripper closing
S Air purge connection
① Gripper connection
② Finger connection
⑨⓪ Thread below the cover for fastening external attachments

## Hose-free direct connection

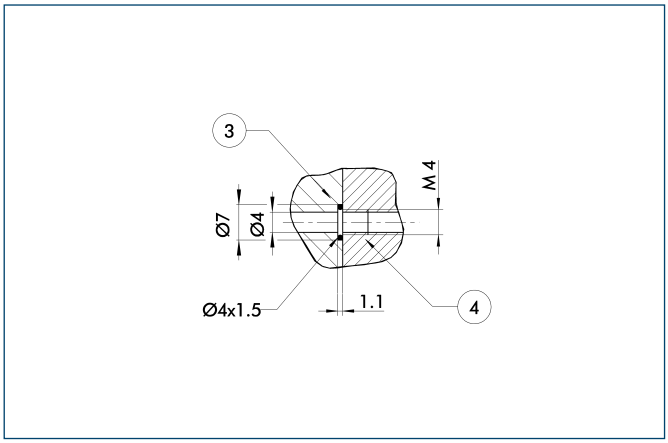


③ Adapter
④ Gripper

The direct connection is used for supplying compressed air without hoses. Instead, the pressure medium is fed through bore-holes in the mounting plate.

## AS/IS gripping force maintenance device

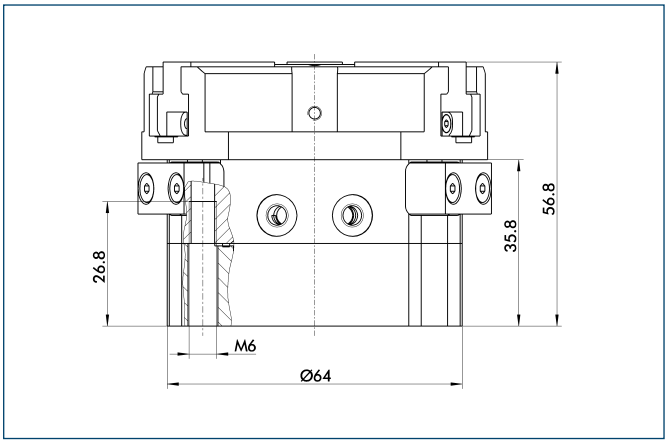


The mechanical gripping force maintenance device ensures a minimum gripping force even in case of pressure drop. This acts as closing force in the AS version, and as opening force in the IS version. In addition, the gripping force maintenance device can also be used for increasing the gripping force or for single-acting gripping.

## Modular Assembly Automation

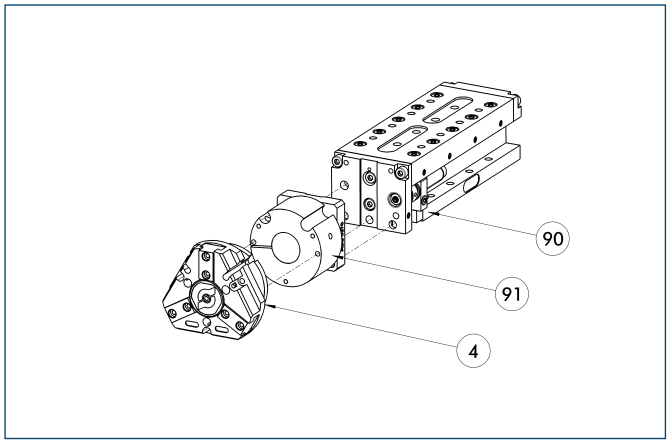


④ Gripper
⑨⓪ CLM
⑨① ASG

This gripper can be combined with the standard linear modules LM, KLM, CLM and ELM of the GEMOTEC modular system. For more information see our main catalog "Modular Assembly Automation".

## Spring-loaded pressure piece

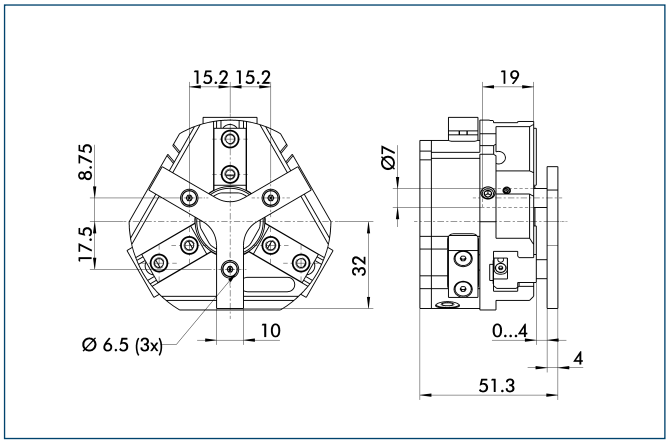


For spring-supported positioning of the workpiece against a stop after the gripper has opened. Especially developed for loading machines.

| Description | ID | Stroke | Min. force |
|---|---|---|---|
| Spring-loaded pressure piece | | | |
| A-PZN-plus/DPZ-plus 64 | **0303720** | 4 mm | 11 N |

## Quick-change Jaw System

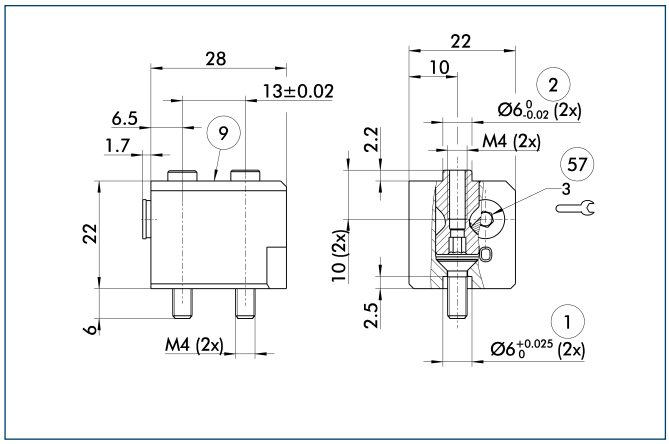


① Gripper connection
② Finger connection
⑨ For mounting screw connection diagram, see basic version
⑤⑦ Locking

The BSWS quick-change jaw system enables top jaws to be changed on the gripper manually and rapidly. An adapter (BSWS-A) and a base (BSWS-B) are required for each gripper jaw.
For a reverse assembly without height set-up, one adapter (BSWS-A) and a kit (BSWS-U) per gripper jaw are required. Another effect of the BSWS-U is, that there are no disturbing fastening bores in the finger contour.

| Description | ID |
|---|---|
| Quick-change Jaw System adapter | |
| BSWS-A 64 | **0303022** |
| Quick-change Jaw System base | |
| BSWS-B 64 | **0303023** |
| Quick-change Jaw System reversed | |
| BSWS-U 64 | **0303041** |

## Universal intermediate jaw

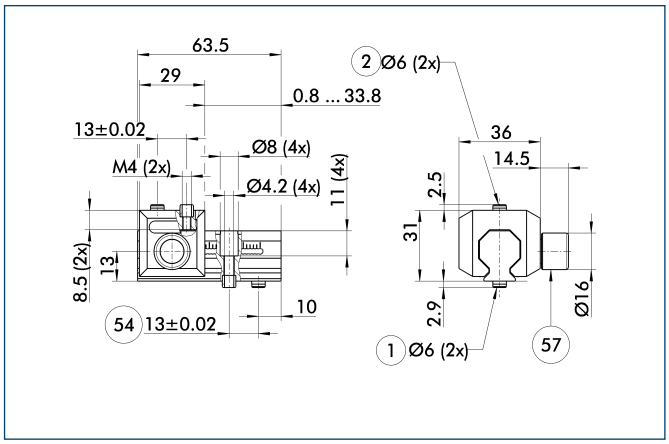


① Gripper connection
② Finger connection
⑤④ Optional right or left connection
⑤⑦ Locking

The universal intermediate jaw allows fast tool-free and reliable plugging and shifting of top jaws at the gripper.

| Description | ID | Grid dimension |
|---|---|---|
| Universal intermediate jaw | | |
| UZB 64 | **0300042** | 1.5 mm |

You can find more detailed information and individual parts of the above-mentioned accessories in the "Accessories" catalog section.

## Force measuring jaws

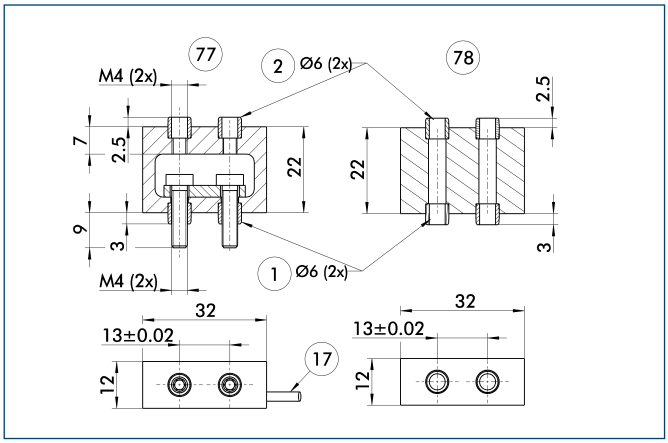


① Gripper connection
② Finger connection
⑰ Cable outlet
⑦⑦ Active intermediate jaws
⑦⑧ Passive intermediate jaws

Force measuring jaws measure gripping forces, but can also determine workpiece weights or dimensional deviations. There are active and passive intermediate jaws (FMS-ZBA or FMS-ZBP). At least one active force measuring jaw is required per gripper, the rest can be passive. For each active jaw, a FMS-A1 control unit and a FMS-A connection cable are required.

| Description | ID |
|---|---|
| Active intermediate jaws | |
| FMS-ZBA 64 | **0301832** |
| Passive intermediate jaws | |
| FMS-ZBP 64 | **0301833** |
| Electronic Processor | |
| FMS-A1 | **0301810** |
| Connection cables | |
| FMS-AK0200 | **0301820** |
| FMS-AK0500 | **0301821** |
| FMS-AK1000 | **0301822** |
| FMS-AK2000 | **0301823** |

## Finger blanks

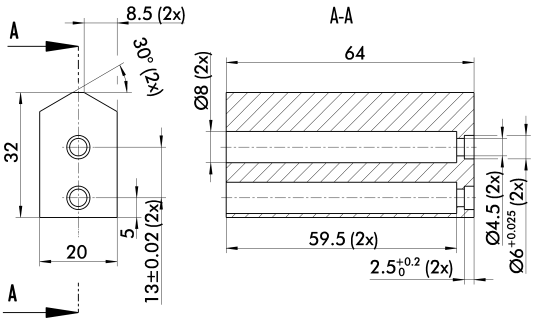


Finger blanks for customized subsequent machining

| Description | ID | Material | Scope of delivery |
|---|---|---|---|
| Finger blanks | | | |
| ABR-plus 64 | **0300010** | Aluminum | 1 |
| SBR-plus 64 | **0300020** | 16 MnCr 5 | 1 |

You can find more detailed information and individual parts of the above-mentioned accessories in the “Accessories” catalog section.

## Tolerance compensation unit

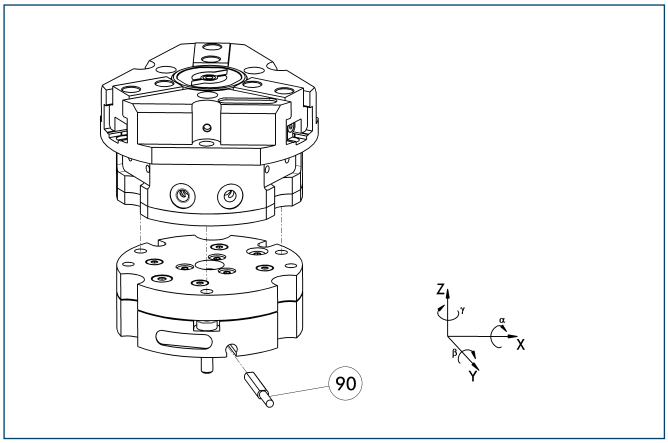


90 Monitoring of locking

Grippers can be directly mounted without an adapter plate. Tolerance compensation unit and gripper have an identical screw connection diagram. Therefore the tolerance compensation units can be assembled later. Please consider the additional assembly height of the tolerance compensation unit. For details see catalog “Robot Accessories”.

| Description | ID | Locking | Deflection |
|---|---|---|---|
| Compensation unit | | | |
| TCU-064-3-MV-Z | **0324766** | Yes | |
| TCU-064-3-OV-Z | **0324767** | No | |

## Programmable magnetic switch

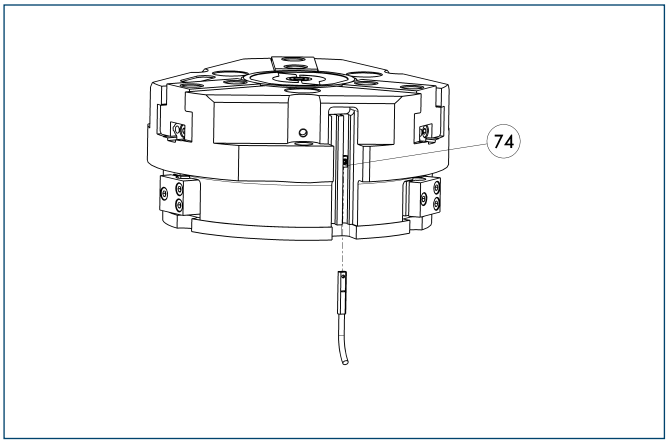


74 Stop for MMS-P

Position monitoring with two programmable positions per sensor. The end position monitoring is mounted in the C-slot.

| Description | ID | Recommended product |
|---|---|---|
| Programmable magnetic switch | | |
| MMS-P 22-S-M8-PNP | **0301370** | • |
| MMSK-P 22-S-PNP | **0301371** | |
| Connection cables | | |
| KA BG08-L 4P-0500 | **0307767** | |
| KA BG08-L 4P-1000 | **0307768** | |
| KA BW08-L 4P-0500 | **0307765** | |
| KA BW08-L 4P-1000 | **0307766** | |
| Sensor Distributor | | |
| V2-M8-4P-2XM8-3P | **0301380** | |

ⓘ Please note the minimum permitted bending radii for the sensor cables, which are generally 35 mm.

ⓘ Per gripper one sensor (closer/NO) is required, optionally a cable extension.

## Compensation unit with spring reset

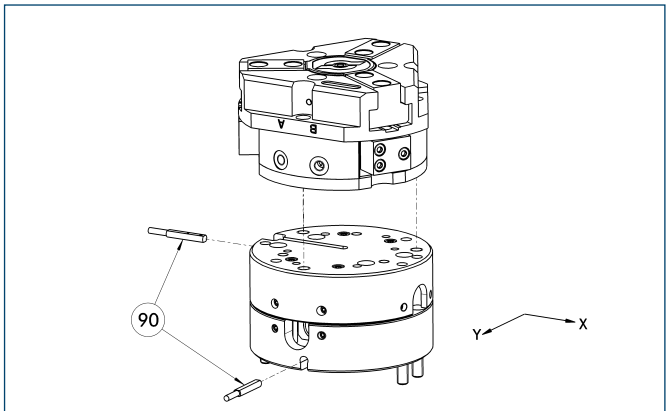


90 Monitoring

Grippers can be directly mounted without using an adapter plate. For details see our catalog “Robot Accessories”.

| Description | ID | Compensation travel | Reset force |
|---|---|---|---|
| Compensation unit | | | |
| AGE-F-XY-063-1 | **0324940** | ±4 mm | 9 N |
| AGE-F-XY-063-2 | **0324941** | ±4 mm | 10 N |
| AGE-F-XY-063-3 | **0324942** | ±4 mm | 19.3 N |

## Electronic magnetic switches

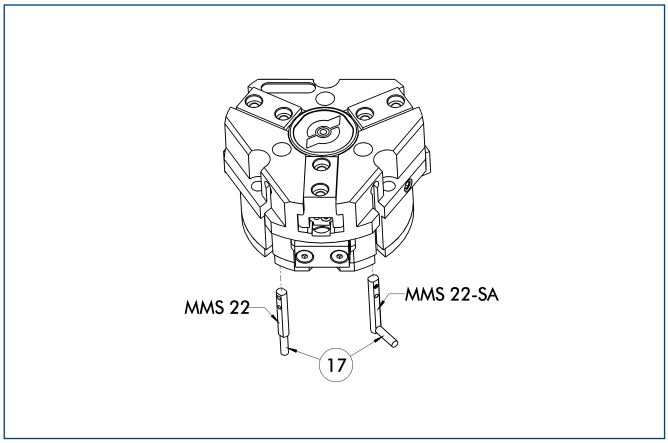


⑰ Cable outlet

End position monitoring for mounting in the C-slot

| Description | ID | Recommended product |
|---|---|---|
| Electronic magnetic switches | | |
| MMS 22-S-M5-PNP | **0301438** | |
| MMS 22-S-M5-NPN | **0301439** | |
| MMS 22-S-M8-PNP | **0301432** | • |
| MMS 22-S-M8-NPN | **0301433** | |
| MMSK 22-S-PNP | **0301434** | |
| MMSK 22-S-NPN | **0301435** | |
| Electronic magnetic switches with lateral cable outlet | | |
| MMS 22-S-M5-PNP-SA | **0301448** | |
| MMS 22-S-M5-NPN-SA | **0301449** | |
| MMS 22-S-M8-PNP-SA | **0301442** | • |
| MMS 22-S-M8-NPN-SA | **0301443** | |
| MMSK 22-S-PNP-SA | **0301444** | |
| MMSK 22-S-NPN-SA | **0301445** | |
| Connection cables | | |
| KA BG05-L 3P-0300 | **0301652** | |
| KA BG08-L 3P-0300-PNP | **0301622** | |
| KA BG08-L 3P-0500-PNP | **0301623** | |
| KA BW05-L 3P-0300 | **0301650** | |
| KA BW08-L 3P-0300-NPN | **0301602** | |
| KA BW08-L 3P-0300-PNP | **0301594** | |
| KA BW08-L 3P-0500-NPN | **9641116** | |
| KA BW08-L 3P-0500-PNP | **0301502** | |
| Cable extensions | | |
| KV BW08-SG08 3P-0030-PNP | **0301495** | |
| KV BW08-SG08 3P-0100-PNP | **0301496** | |
| KV BW08-SG08 3P-0200-PNP | **0301497** | |

ⓘ Two sensors (closer/NO) are required for each gripper, plus extension cables as an option.

ⓘ Please note the minimum permitted bending radii for the sensor cables, which are generally 35 mm.

## Inductive proximity switches

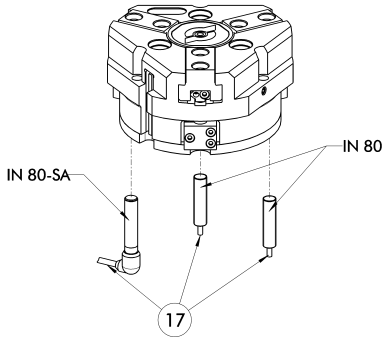


⑰ Cable outlet

End position monitoring for direct mounting

| Description | ID | Recommended product |
|---|---|---|
| Inductive proximity switches | | |
| IN 80-S-M8 | **0301478** | • |
| IN 80-S-M12 | **0301578** | |
| INK 80-S | **0301550** | |
| Inductive proximity switch with lateral outlet | | |
| IN 80-S-M12-SA | **0301587** | |
| IN 80-S-M8-SA | **0301483** | • |
| INK 80-S-SA | **0301566** | |
| Connection cables | | |
| KA BG08-L 3P-0300-PNP | **0301622** | |
| KA BG08-L 3P-0500-PNP | **0301623** | |
| KA BG12-L 3P-0500-PNP | **30016369** | |
| KA BW08-L 3P-0300-PNP | **0301594** | |
| KA BW08-L 3P-0500-PNP | **0301502** | |
| KA BW12-L 3P-0300-PNP | **0301503** | |
| KA BW12-L 3P-0500-PNP | **0301507** | |
| Cable extensions | | |
| KV BG12-SG12 3P-0030-PNP | **0301999** | |
| KV BG12-SG12 3P-0060-PNP | **0301998** | |
| KV BW08-SG08 3P-0030-PNP | **0301495** | |
| KV BW08-SG08 3P-0100-PNP | **0301496** | |
| KV BW08-SG08 3P-0200-PNP | **0301497** | |
| KV BW12-SG12 3P-0030-PNP | **0301595** | |
| KV BW12-SG12 3P-0100-PNP | **0301596** | |
| KV BW12-SG12 3P-0200-PNP | **0301597** | |

ⓘ Two sensors (closer/NO) are required for each gripper, plus extension cables as an option.

ⓘ Please note the minimum permitted bending radii for the sensor cables, which are generally 35 mm.

You can find more detailed information and individual parts of the above-mentioned accessories in the “Accessories” catalog section.

## Cylindrical Reed Switches

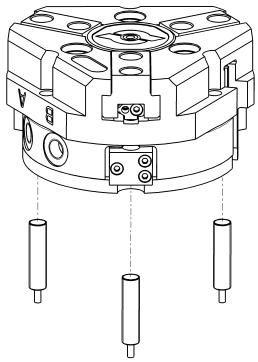

End position monitoring mounted with mounting kit

| Description | ID |
|---|---|
| Mounting kit for proximity switch | |
| AS-RMS 80 PGN/PZN-plus 64/80 | **0377725** |
| Reed Switches | |
| RMS 80-S-M8 | **0377721** |

ⓘ Two sensors (closer/NO) are required for each gripper, plus extension cables as an option.
ⓘ This mounting kit needs to be ordered optionally as an accessory.
ⓘ Please note the minimum permitted bending radii for the sensor cables, which are generally 35 mm.

## Analog position sensor

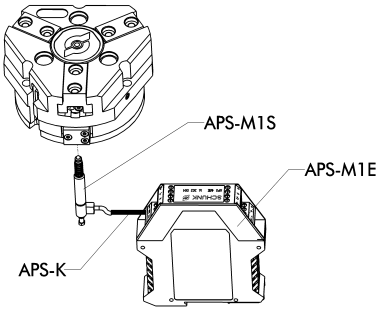


Analog multi position monitoring for any desired positions

| Description | ID |
|---|---|
| Mounting kit | |
| AS-APS-M1-64/1 | **0302075** |
| Connection cables | |
| APS-K0200 | **0302066** |
| APS-K0700 | **0302068** |
| Electronic Processor | |
| APS-M1E | **0302064** |
| Sensor | |
| APS-M1S | **0302062** |

ⓘ When using an APS system, for each gripper a mounting kit (AS-APS), an APS sensor (APS-M 1S, incl. 3 m cable) as well as an electronics (APS-M1e) are required.
ⓘ An extension cable (APS-K) can be connected between the sensor and the electronics as an option. The max. cable length between the sensor and the electronics is 10 m, between the electronics and their control unit (PLC) it is max. 1 m.

You can find more detailed information and individual parts of the above-mentioned accessories in the “Accessories” catalog section.

## Flexible Position Sensor

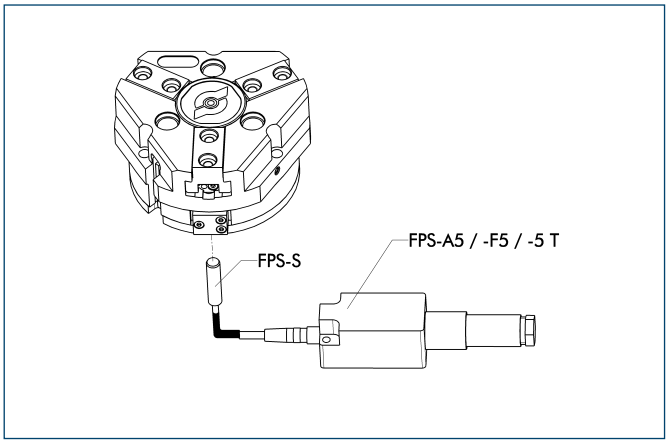


Flexible position monitoring of up to five positions

| Description | ID |
|---|---|
| Mounting kit for FPS | |
| AS-PGN/PZN-plus 64/1, PGN/PZN-plus 80/2 | **0301630** |
| Electronic Processor | |
| FPS-F5 | **0301805** |
| FPS-F5 T | **0301807** |
| Sensor | |
| FPS-S M8 | **0301704** |

ⓘ When using a FPS system, a FPS sensor (FPS-S) and a control unit (FPS-F5 / F5 T or A5) are required for each gripper as well as a mounting kit (AS), if listed. Cable extensions (KV) are available as options in the “Accessories” catalog section.

You can find more detailed information and individual parts of the above-mentioned accessories in the “Accessories” catalog section.

# JGZ 80

**Pneumatic • 3-Finger Centric Gripper • Universal Gripper**



## Gripping force, I.D. gripping

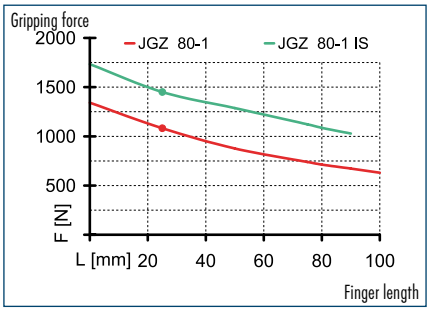


## Gripping force, O.D. gripping

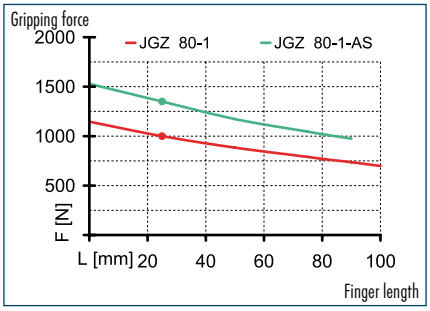


## Finger load

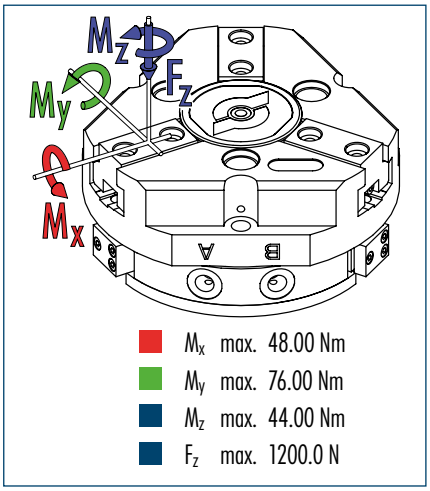


ⓘ The indicated moments and forces are static values, apply per base jaw and may occur simultaneously. $M_y$ may arise in addition to the moment generated by the gripping force itself. If the max. permitted finger weight is exceeded, it is imperative to throttle the air pressure so that the jaw movement occurs without any hitting or bouncing. Service life may be reduced.

## Technical data

| Description | | JGZ 80-1 | JGZ 80-1-AS | JGZ 80-1-IS |
|---|---|---|---|---|
| **ID** | | **0308930** | **0308931** | **0308932** |
| Stroke per finger | [mm] | 8 | 8 | 8 |
| Closing force | [N] | 1000 | 1350 | |
| Opening force | [N] | 1080 | | 1450 |
| Min. spring force | [N] | | 350 | 370 |
| Weight | [kg] | 0.79 | 0.96 | 0.96 |
| Recommended workpiece weight | [kg] | 5 | 5 | 5 |
| Air consumption per double stroke | [cm³] | 60 | 60 | 60 |
| Min./max. operating pressure | [bar] | 2/8 | 4/6.5 | 4/6.5 |
| Nominal operating pressure | [bar] | 6 | 6 | 6 |
| Closing/opening time | [s] | 0.05/0.05 | 0.03/0.05 | 0.06/0.04 |
| Max. permitted finger length | [mm] | 100 | 90 | 90 |
| Max. permitted weight per finger | [kg] | 0.6 | 0.6 | 0.6 |
| IP class | | 40 | 40 | 40 |
| Min./max. ambient temperature | [°C] | -10/90 | -10/90 | -10/90 |
| Repeat accuracy | [mm] | 0.01 | 0.01 | 0.01 |
| Cleanroom class ISO-classification 14644-1 | | 5 | 5 | 5 |

## Main view

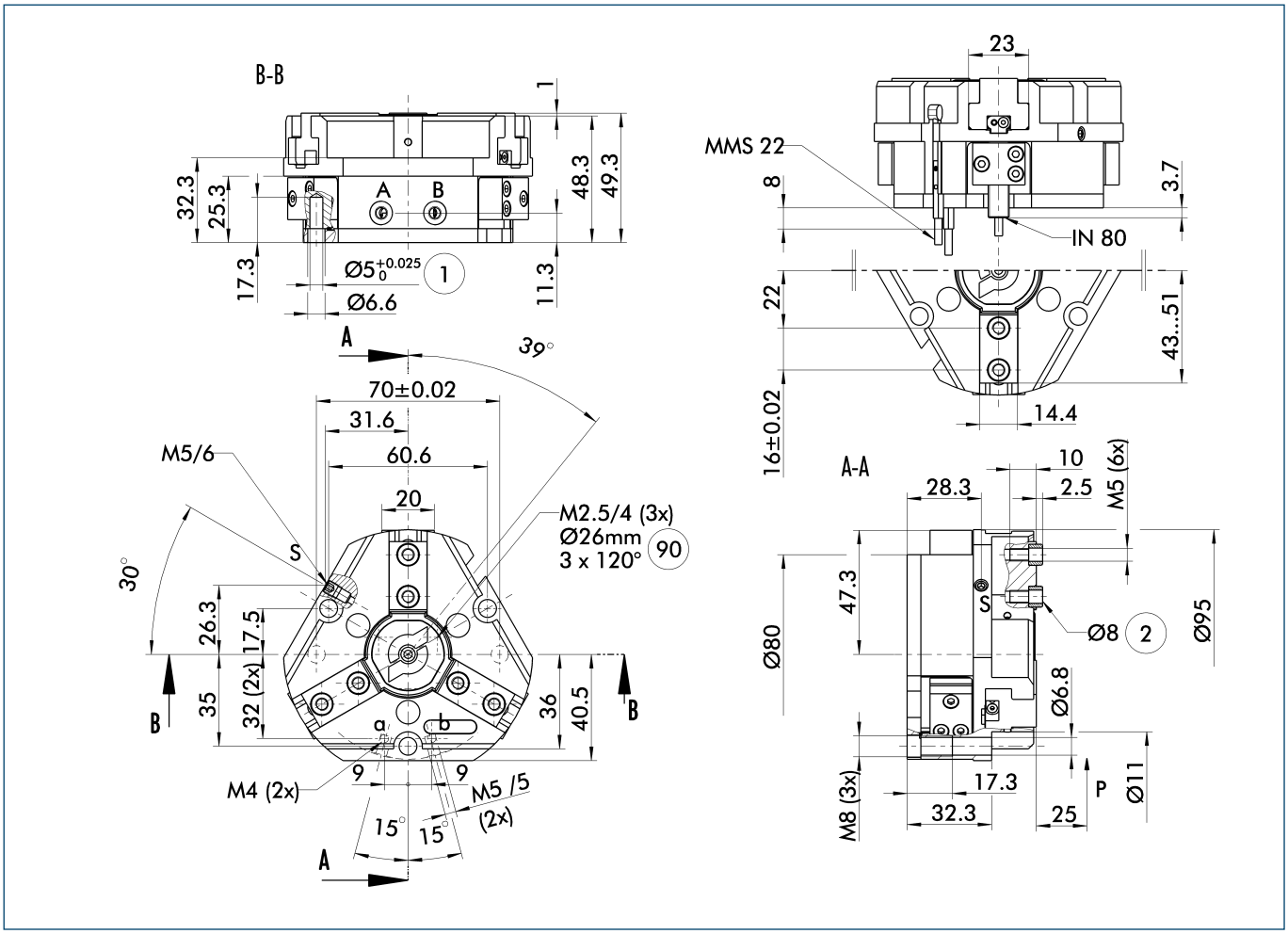


The drawing shows the gripper in the basic version with closed jaws, the dimensions do not include the options described below.

ⓘ The SDV-P pressure maintenance valve can also be used for I.D. or O.D. gripping alternatively or in addition to the spring-loaded, mechanical gripping force maintenance device (see "Accessories" catalog section).

A, a Main/direct connection, gripper opening
B, b Main/direct connection, gripper closing
S Air purge connection
① Gripper connection
② Finger connection
⑨⓪ Thread below the cover for fastening external attachments

## Hose-free direct connection

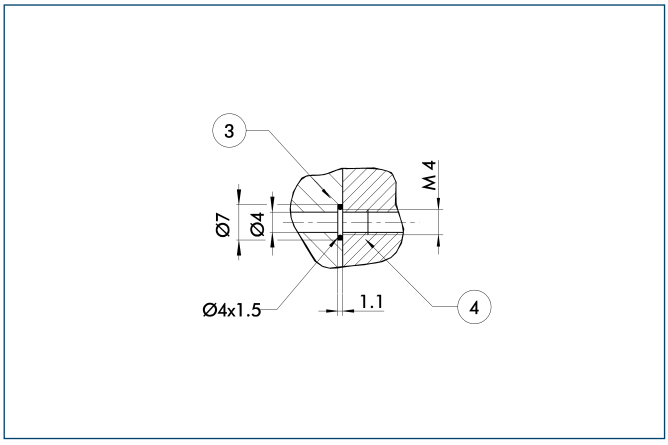


③ Adapter
④ Gripper

The direct connection is used for supplying compressed air without hoses. Instead, the pressure medium is fed through bore-holes in the mounting plate.

## AS/IS gripping force maintenance device

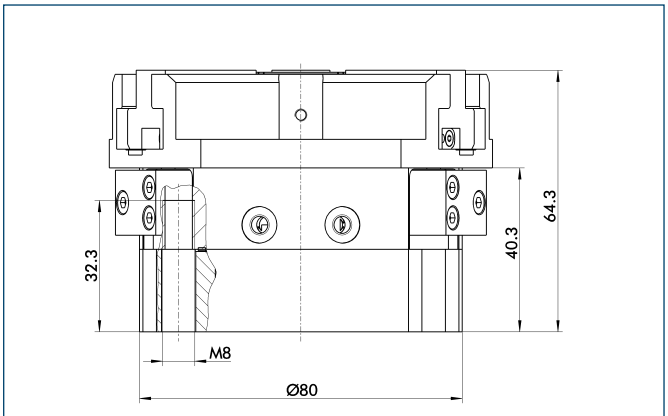


The mechanical gripping force maintenance device ensures a minimum gripping force even in case of pressure drop. This acts as closing force in the AS version, and as opening force in the IS version. In addition, the gripping force maintenance device can also be used for increasing the gripping force or for single-acting gripping.

## Modular Assembly Automation

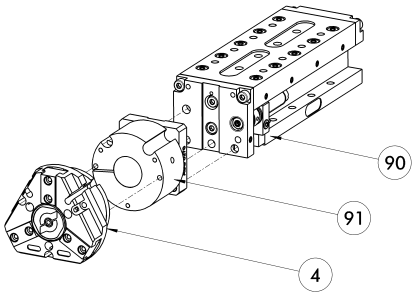


④ Gripper
⑨⓪ CLM
⑨① ASG

This gripper can be combined with the standard linear modules LM, KLM, CLM and ELM of the GEMOTEC modular system. For more information see our main catalog "Modular Assembly Automation".

## Spring-loaded pressure piece

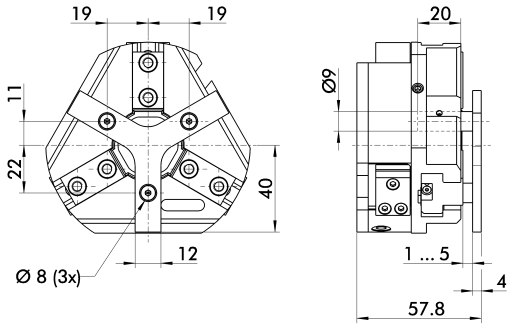


For spring-supported positioning of the workpiece against a stop after the gripper has opened. Especially developed for loading machines.

| Description | ID | Stroke | Min. force |
|---|---|---|---|
| Spring-loaded pressure piece | | | |
| A-PZN-plus/DPZ-plus 80 | **0303721** | 4 mm | 18 N |

## Quick-change Jaw System

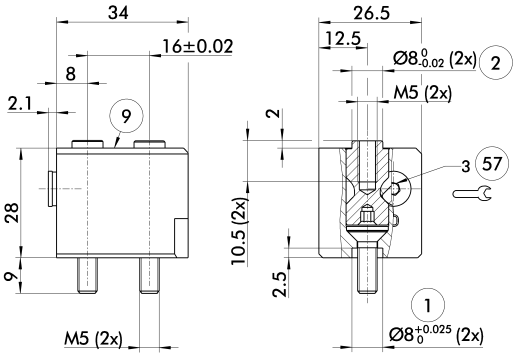


① Gripper connection
② Finger connection
⑨ For mounting screw connection diagram, see basic version
⑤⑦ Locking

The BSWS quick-change jaw system enables top jaws to be changed on the gripper manually and rapidly. An adapter (BSWS-A) and a base (BSWS-B) are required for each gripper jaw.
For a reverse assembly without height set-up, one adapter (BSWS-A) and a kit (BSWS-U) per gripper jaw are required. Another effect of the BSWS-U is, that there are no disturbing fastening bores in the finger contour.

| Description | ID |
|---|---|
| Quick-change Jaw System adapter | |
| BSWS-A 80 | **0303024** |
| Quick-change Jaw System base | |
| BSWS-B 80 | **0303025** |
| Quick-change Jaw System reversed | |
| BSWS-U 80 | **0303042** |

## Universal intermediate jaw

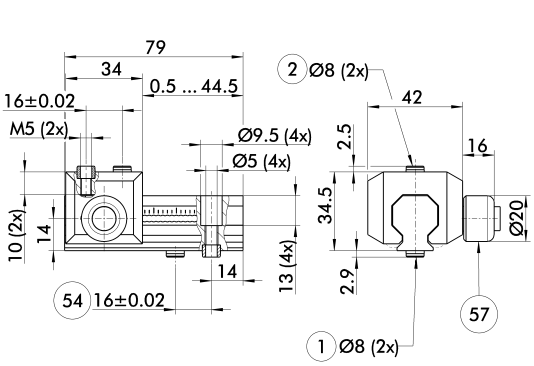


① Gripper connection
② Finger connection
⑤④ Optional right or left connection
⑤⑦ Locking

The universal intermediate jaw allows fast tool-free and reliable plugging and shifting of top jaws at the gripper.

| Description | ID | Grid dimension |
|---|---|---|
| Universal intermediate jaw | | |
| UZB 80 | **0300043** | 2 mm |
| UZB-S 80 | **5518271** | 2 mm |

ⓘ The slide UZB-S can be removed completely and has to be ordered separately. Moreover, it allows a fast jaw change.

You can find more detailed information and individual parts of the above-mentioned accessories in the "Accessories" catalog section.

## Force measuring jaws

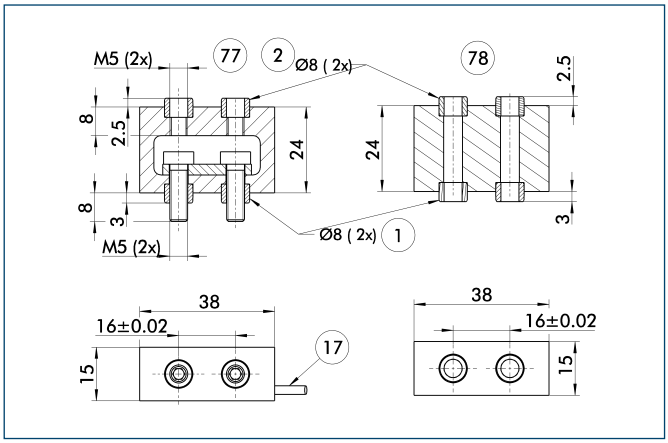


① Gripper connection
② Finger connection
⑰ Cable outlet
⑦⑦ Active intermediate jaws
⑦⑧ Passive intermediate jaws

Force measuring jaws measure gripping forces, but can also determine workpiece weights or dimensional deviations. There are active and passive intermediate jaws (FMS-ZBA or FMS-ZBP). At least one active force measuring jaw is required per gripper, the rest can be passive. For each active jaw, a FMS-A1 control unit and a FMS-A connection cable are required.

| Description | ID |
|---|---|
| Active intermediate jaws | |
| FMS-ZBA 80 | **0301834** |
| Passive intermediate jaws | |
| FMS-ZBP 80 | **0301835** |
| Electronic Processor | |
| FMS-A1 | **0301810** |
| Connection cables | |
| FMS-AK0200 | **0301820** |
| FMS-AK0500 | **0301821** |
| FMS-AK1000 | **0301822** |
| FMS-AK2000 | **0301823** |

## Finger blanks

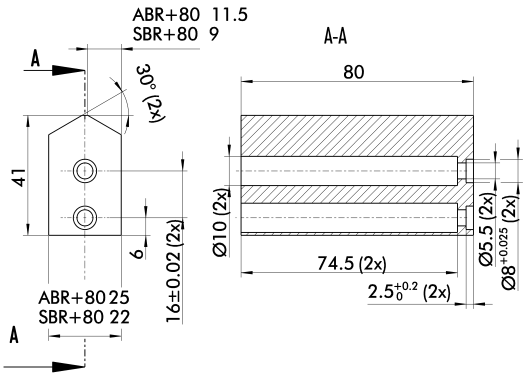


Finger blanks for customized subsequent machining

| Description | ID | Material | Scope of delivery |
|---|---|---|---|
| Finger blanks | | | |
| ABR-plus 80 | **0300011** | Aluminum | 1 |
| SBR-plus 80 | **0300021** | 16 MnCr 5 | 1 |

You can find more detailed information and individual parts of the above-mentioned accessories in the “Accessories” catalog section.

## Tolerance compensation unit

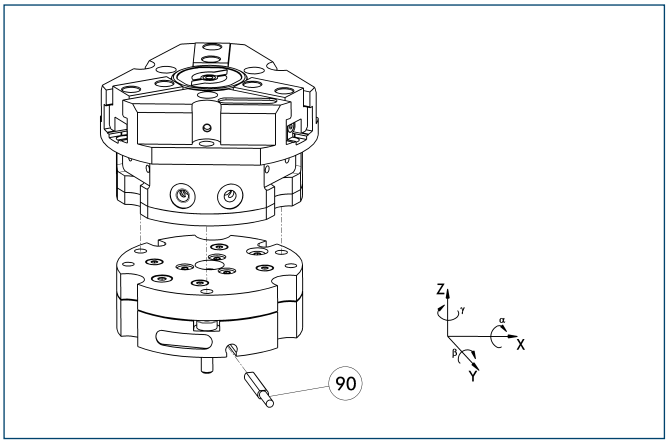


(90) Monitoring of locking

Grippers can be directly mounted without an adapter plate. Tolerance compensation unit and gripper have an identical screw connection diagram. Therefore the tolerance compensation units can be assembled later. Please consider the additional assembly height of the tolerance compensation unit. For details see catalog “Robot Accessories”.

| Description | ID | Locking | Deflection |
|---|---|---|---|
| Compensation unit | | | |
| TCU-080-3-MV-Z | **0324784** | Yes | |
| TCU-080-3-OV-Z | **0324785** | No | |

## Programmable magnetic switch

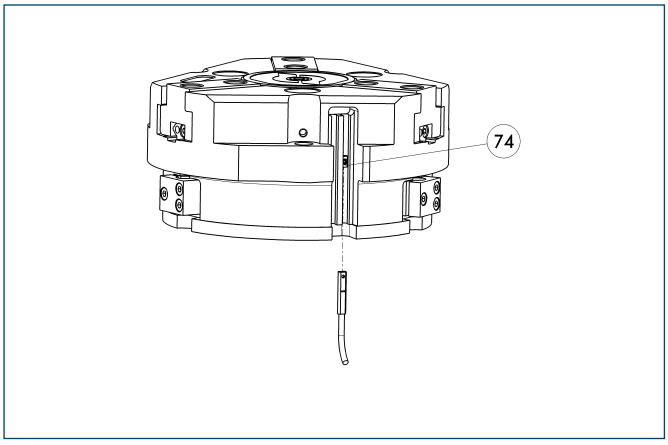


(74) Stop for MMS-P

Position monitoring with two programmable positions per sensor. The end position monitoring is mounted in the C-slot.

| Description | ID | Recommended product |
|---|---|---|
| Programmable magnetic switch | | |
| MMS-P 22-S-M8-PNP | **0301370** | • |
| MMSK-P 22-S-PNP | **0301371** | |
| Connection cables | | |
| KA BG08-L 4P-0500 | **0307767** | |
| KA BG08-L 4P-1000 | **0307768** | |
| KA BW08-L 4P-0500 | **0307765** | |
| KA BW08-L 4P-1000 | **0307766** | |
| Sensor Distributor | | |
| V2-M8-4P-2XM8-3P | **0301380** | |

ⓘ Please note the minimum permitted bending radii for the sensor cables, which are generally 35 mm.

ⓘ Per gripper one sensor (closer/NO) is required, optionally a cable extension.

## Compensation unit with spring reset

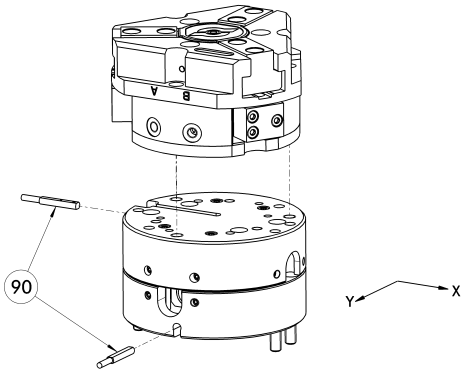


(90) Monitoring

Grippers can be directly mounted without using an adapter plate. For details see our catalog “Robot Accessories”.

| Description | ID | Compensation travel | Reset force |
|---|---|---|---|
| Compensation unit | | | |
| AGE-F-XY-063-1 | **0324940** | ±4 mm | 9 N |
| AGE-F-XY-063-2 | **0324941** | ±4 mm | 10 N |
| AGE-F-XY-063-3 | **0324942** | ±4 mm | 19.3 N |

## Electronic magnetic switches

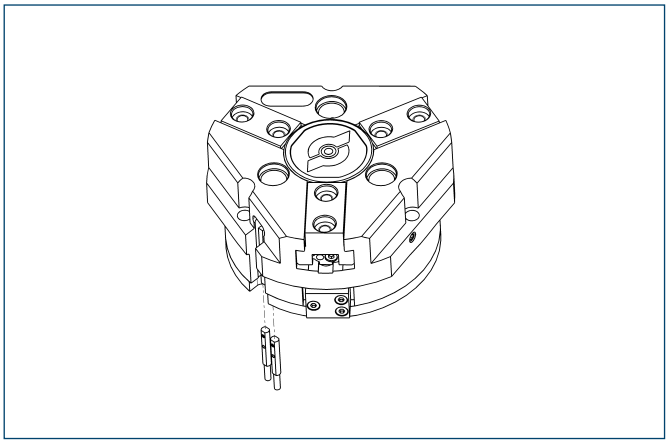

End position monitoring for mounting in the C-slot

| Description | ID | Recommended product |
|---|---|---|
| Electronic magnetic switches | | |
| MMS 22-S-M5-PNP | **0301438** | |
| MMS 22-S-M5-NPN | **0301439** | |
| MMS 22-S-M8-PNP | **0301432** | • |
| MMS 22-S-M8-NPN | **0301433** | |
| MMSK 22-S-PNP | **0301434** | |
| MMSK 22-S-NPN | **0301435** | |
| Electronic magnetic switches with lateral cable outlet | | |
| MMS 22-S-M5-PNP-SA | **0301448** | |
| MMS 22-S-M5-NPN-SA | **0301449** | |
| MMS 22-S-M8-PNP-SA | **0301442** | • |
| MMS 22-S-M8-NPN-SA | **0301443** | |
| MMSK 22-S-PNP-SA | **0301444** | |
| MMSK 22-S-NPN-SA | **0301445** | |
| Reed Switches | | |
| RMS 22-S-M8 | **0377720** | • |
| Connection cables | | |
| KA BG05-L 3P-0300 | **0301652** | |
| KA BG08-L 3P-0300-PNP | **0301622** | |
| KA BG08-L 3P-0500-PNP | **0301623** | |
| KA BW05-L 3P-0300 | **0301650** | |
| KA BW08-L 3P-0300-NPN | **0301602** | |
| KA BW08-L 3P-0300-PNP | **0301594** | |
| KA BW08-L 3P-0500-NPN | **9641116** | |
| KA BW08-L 3P-0500-PNP | **0301502** | |
| Cable extensions | | |
| KV BW08-SG08 3P-0030-PNP | **0301495** | |
| KV BW08-SG08 3P-0100-PNP | **0301496** | |
| KV BW08-SG08 3P-0200-PNP | **0301497** | |

ⓘ Two sensors (closer/NO) are required for each gripper, plus extension cables as an option.

ⓘ Please note the minimum permitted bending radii for the sensor cables, which are generally 35 mm.

## Inductive proximity switches

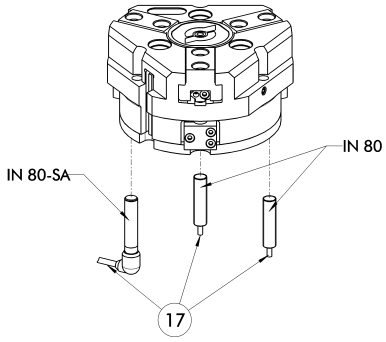


⑰ Cable outlet

End position monitoring for direct mounting

| Description | ID | Recommended product |
|---|---|---|
| Inductive proximity switches | | |
| IN 80-S-M8 | **0301478** | • |
| IN 80-S-M12 | **0301578** | |
| INK 80-S | **0301550** | |
| Inductive proximity switch with lateral outlet | | |
| IN 80-S-M12-SA | **0301587** | |
| IN 80-S-M8-SA | **0301483** | • |
| INK 80-S-SA | **0301566** | |
| Connection cables | | |
| KA BG08-L 3P-0300-PNP | **0301622** | |
| KA BG08-L 3P-0500-PNP | **0301623** | |
| KA BG12-L 3P-0500-PNP | **30016369** | |
| KA BW08-L 3P-0300-PNP | **0301594** | |
| KA BW08-L 3P-0500-PNP | **0301502** | |
| KA BW12-L 3P-0300-PNP | **0301503** | |
| KA BW12-L 3P-0500-PNP | **0301507** | |
| Cable extensions | | |
| KV BG12-SG12 3P-0030-PNP | **0301999** | |
| KV BG12-SG12 3P-0060-PNP | **0301998** | |
| KV BW08-SG08 3P-0030-PNP | **0301495** | |
| KV BW08-SG08 3P-0100-PNP | **0301496** | |
| KV BW08-SG08 3P-0200-PNP | **0301497** | |
| KV BW12-SG12 3P-0030-PNP | **0301595** | |
| KV BW12-SG12 3P-0100-PNP | **0301596** | |
| KV BW12-SG12 3P-0200-PNP | **0301597** | |

ⓘ Two sensors (closer/NO) are required for each gripper, plus extension cables as an option.

ⓘ Please note the minimum permitted bending radii for the sensor cables, which are generally 35 mm.

You can find more detailed information and individual parts of the above-mentioned accessories in the “Accessories” catalog section.

## Cylindrical Reed Switches

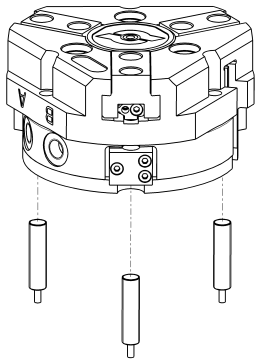

End position monitoring mounted with mounting kit

| Description | ID |
|---|---|
| Mounting kit for proximity switch | |
| AS-RMS 80 PGN/PZN-plus 64/80 | **0377725** |
| Reed Switches | |
| RMS 80-S-M8 | **0377721** |

ⓘ Two sensors (closer/NO) are required for each gripper, plus extension cables as an option.

ⓘ This mounting kit needs to be ordered optionally as an accessory.

ⓘ Please note the minimum permitted bending radii for the sensor cables, which are generally 35 mm.

## Analog position sensor

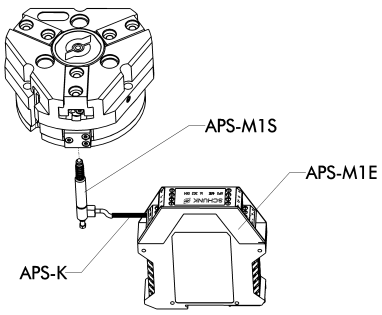


Analog multi position monitoring for any desired positions

| Description | ID |
|---|---|
| Mounting kit | |
| AS-APS-M1-80/1 | **0302077** |
| Connection cables | |
| APS-K0200 | **0302066** |
| APS-K0700 | **0302068** |
| Electronic Processor | |
| APS-M1E | **0302064** |
| Sensor | |
| APS-M1S | **0302062** |

ⓘ When using an APS system, for each gripper a mounting kit (AS-APS), an APS sensor (APS-M 1S, incl. 3 m cable) as well as an electronics (APS-M1e) are required.

ⓘ An extension cable (APS-K) can be connected between the sensor and the electronics as an option. The max. cable length between the sensor and the electronics is 10 m, between the electronics and their control unit (PLC) it is max. 1 m.

You can find more detailed information and individual parts of the above-mentioned accessories in the “Accessories” catalog section.

## Flexible Position Sensor

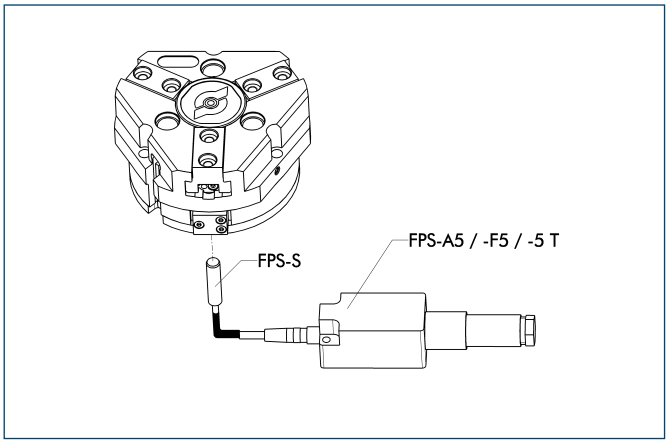


Flexible position monitoring of up to five positions

| Description | ID |
|---|---|
| Mounting kit for FPS | |
| AS-PGN-plus/PZN-plus 80/1, PZB 80/100 | **0301632** |
| Electronic Processor | |
| FPS-F5 | **0301805** |
| FPS-F5 T | **0301807** |
| Sensor | |
| FPS-S M8 | **0301704** |

ⓘ When using a FPS system, a FPS sensor (FPS-S) and a control unit (FPS-F5 / F5 T or A5) are required for each gripper as well as a mounting kit (AS), if listed. Cable extensions (KV) are available as options in the “Accessories” catalog section.

You can find more detailed information and individual parts of the above-mentioned accessories in the “Accessories” catalog section.

# JGZ 100

**Pneumatic • 3-Finger Centric Gripper • Universal Gripper**

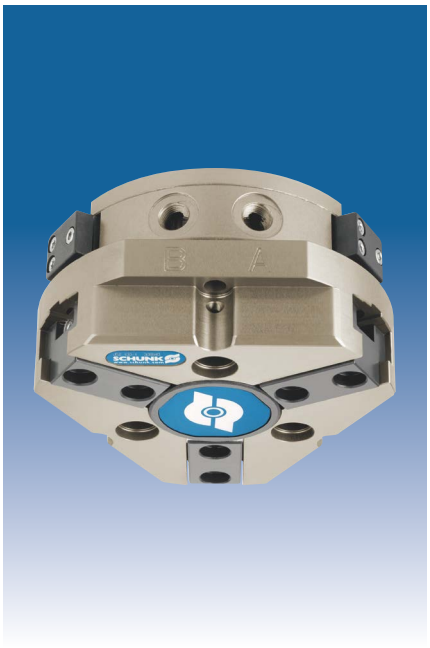

## Gripping force, I.D. gripping

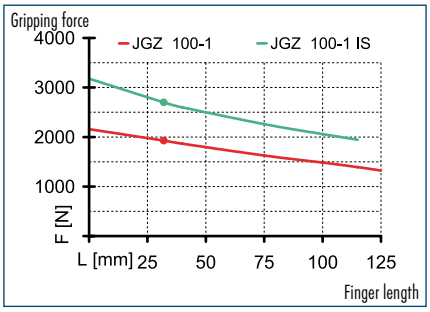


## Gripping force, O.D. gripping

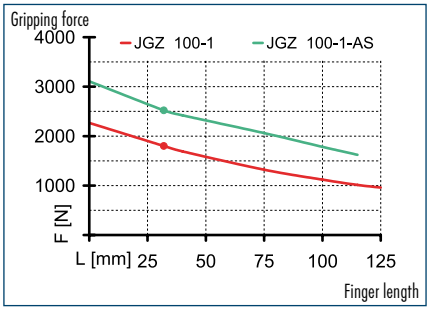


## Finger load

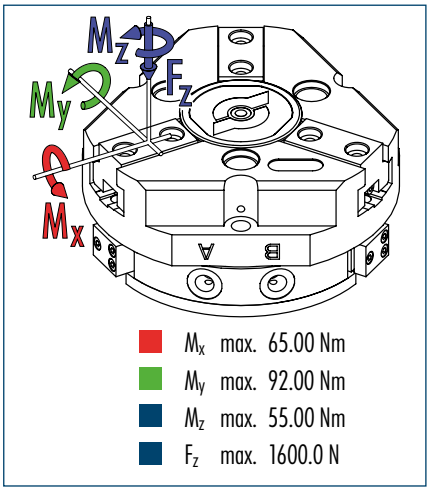


- $M_x$ max. 65.00 Nm
- $M_y$ max. 92.00 Nm
- $M_z$ max. 55.00 Nm
- $F_z$ max. 1600.0 N

ⓘ The indicated moments and forces are static values, apply per base jaw and may occur simultaneously. $M_y$ may arise in addition to the moment generated by the gripping force itself. If the max. permitted finger weight is exceeded, it is imperative to throttle the air pressure so that the jaw movement occurs without any hitting or bouncing. Service life may be reduced.

## Technical data

| Description | | JGZ 100-1 | JGZ 100-1-AS | JGZ 100-1-IS |
|---|---|---|---|---|
| **ID** | | **0308940** | **0308941** | **0308942** |
| Stroke per finger | [mm] | 10 | 10 | 10 |
| Closing force | [N] | 1800 | 2520 | |
| Opening force | [N] | 1920 | | 2700 |
| Min. spring force | [N] | | 720 | 780 |
| Weight | [kg] | 1.41 | 1.95 | 1.95 |
| Recommended workpiece weight | [kg] | 9 | 9 | 9 |
| Air consumption per double stroke | [cm³] | 120 | 120 | 120 |
| Min./max. operating pressure | [bar] | 2/8 | 4/6.5 | 4/6.5 |
| Nominal operating pressure | [bar] | 6 | 6 | 6 |
| Closing/opening time | [s] | 0.1/0.1 | 0.1/0.2 | 0.2/0.1 |
| Max. permitted finger length | [mm] | 125 | 115 | 115 |
| Max. permitted weight per finger | [kg] | 1.1 | 1.1 | 1.1 |
| IP class | | 40 | 40 | 40 |
| Min./max. ambient temperature | [°C] | -10/90 | -10/90 | -10/90 |
| Repeat accuracy | [mm] | 0.01 | 0.01 | 0.01 |
| Cleanroom class ISO-classification 14644-1 | | 5 | 5 | 5 |

## Main view

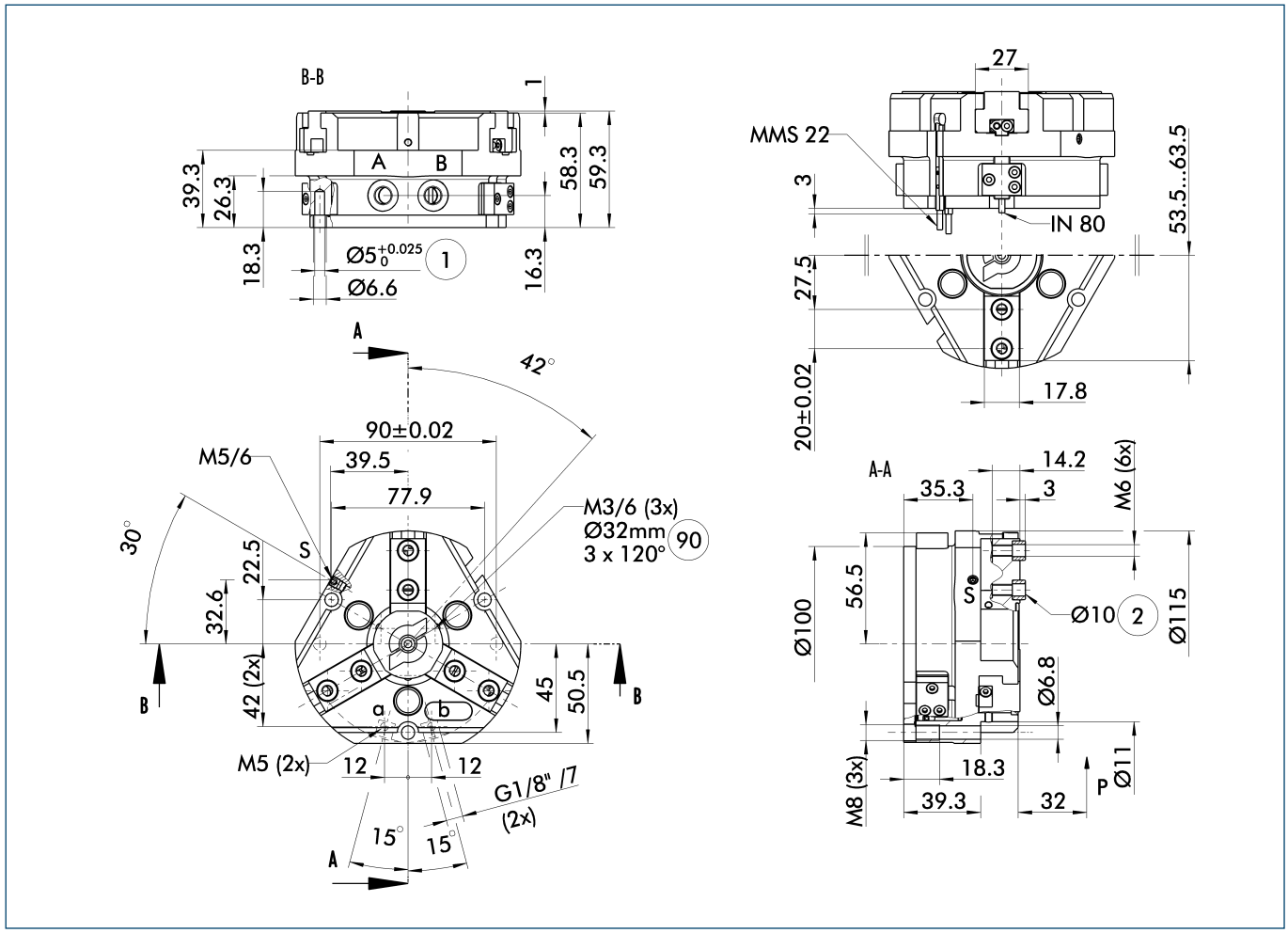


The drawing shows the gripper in the basic version with closed jaws, the dimensions do not include the options described below.

ⓘ The SDV-P pressure maintenance valve can also be used for I.D. or O.D. gripping alternatively or in addition to the spring-loaded, mechanical gripping force maintenance device (see "Accessories" catalog section).

A, a Main/direct connection, gripper opening
B, b Main/direct connection, gripper closing
S Air purge connection
① Gripper connection
② Finger connection
⑨⓪ Thread below the cover for fastening external attachments

## Hose-free direct connection

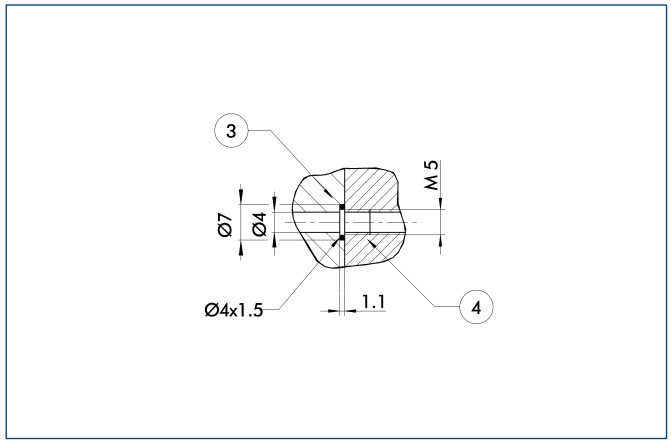


③ Adapter
④ Gripper

The direct connection is used for supplying compressed air without hoses. Instead, the pressure medium is fed through bore-holes in the mounting plate.

## AS/IS gripping force maintenance device

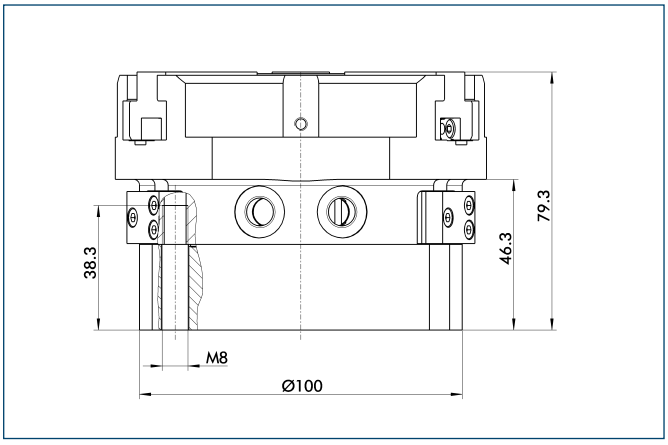


The mechanical gripping force maintenance device ensures a minimum gripping force even in case of pressure drop. This acts as closing force in the AS version, and as opening force in the IS version. In addition, the gripping force maintenance device can also be used for increasing the gripping force or for single-acting gripping.

## Modular Assembly Automation

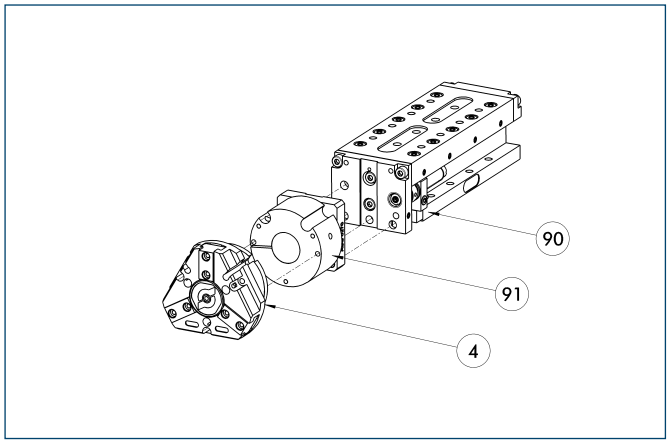


④ Gripper
⑨⓪ CLM
⑨① ASG

This gripper can be combined with the standard linear modules LM, KLM, CLM and ELM of the GEMOTEC modular system. For more information see our main catalog "Modular Assembly Automation".

## Spring-loaded pressure piece

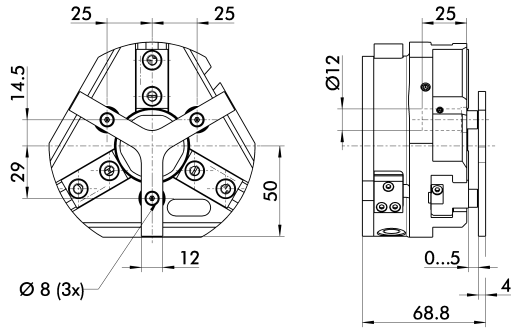


For spring-supported positioning of the workpiece against a stop after the gripper has opened. Especially developed for loading machines.

| Description | ID | Stroke | Min. force |
|---|---|---|---|
| Spring-loaded pressure piece | | | |
| A-PZN-plus/DPZ-plus 100 | **0303722** | 5 mm | 35 N |

## Quick-change Jaw System

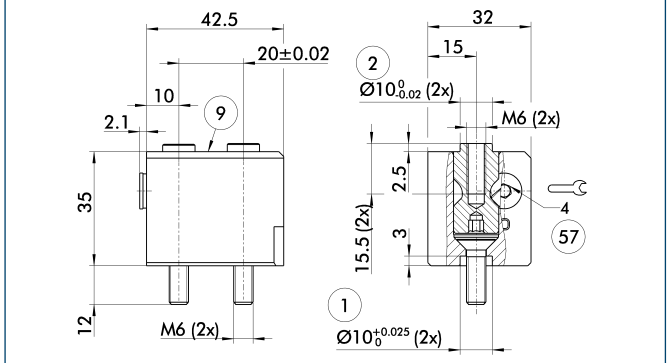


① Gripper connection
② Finger connection
⑨ For mounting screw connection diagram, see basic version
⑤⑦ Locking

The BSWS quick-change jaw system enables top jaws to be changed on the gripper manually and rapidly. An adapter (BSWS-A) and a base (BSWS-B) are required for each gripper jaw.
For a reverse assembly without height set-up, one adapter (BSWS-A) and a kit (BSWS-U) per gripper jaw are required. Another effect of the BSWS-U is, that there are no disturbing fastening bores in the finger contour.

| Description | ID |
|---|---|
| Quick-change Jaw System adapter | |
| BSWS-A 100 | **0303026** |
| Quick-change Jaw System base | |
| BSWS-B 100 | **0303027** |
| Quick-change Jaw System reversed | |
| BSWS-U 100 | **0303043** |

## Universal intermediate jaw

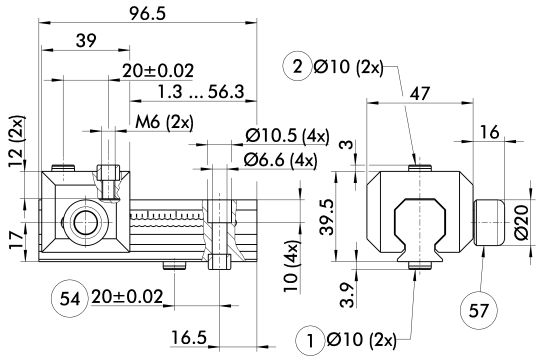


① Gripper connection
② Finger connection
⑤④ Optional right or left connection
⑤⑦ Locking

The universal intermediate jaw allows fast tool-free and reliable plugging and shifting of top jaws at the gripper.

| Description | ID | Grid dimension |
|---|---|---|
| Universal intermediate jaw | | |
| UZB 100 | **0300044** | 2.5 mm |
| UZB-S 100 | **5518272** | 2.5 mm |

ⓘ The slide UZB-S can be removed completely and has to be ordered separately. Moreover, it allows a fast jaw change.

You can find more detailed information and individual parts of the above-mentioned accessories in the "Accessories" catalog section.

## Force measuring jaws

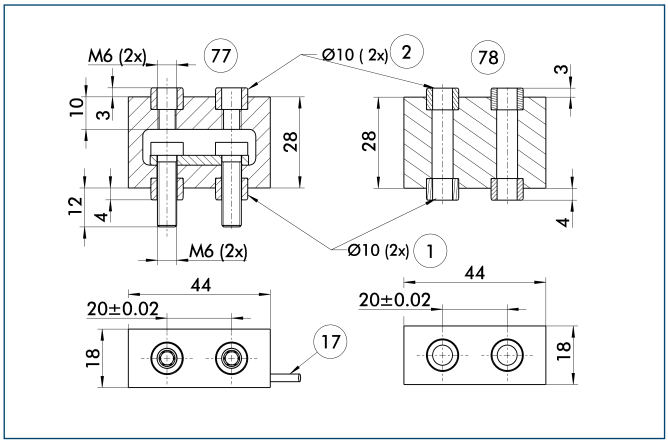


① Gripper connection
② Finger connection
⑰ Cable outlet
⑦⑦ Active intermediate jaws
⑦⑧ Passive intermediate jaws

Force measuring jaws measure gripping forces, but can also determine workpiece weights or dimensional deviations. There are active and passive intermediate jaws (FMS-ZBA or FMS-ZBP). At least one active force measuring jaw is required per gripper, the rest can be passive. For each active jaw, a FMS-A1 control unit and a FMS-A connection cable are required.

| Description | ID |
|---|---|
| Active intermediate jaws | |
| FMS-ZBA 100 | **0301836** |
| Passive intermediate jaws | |
| FMS-ZBP 100 | **0301837** |
| Electronic Processor | |
| FMS-A1 | **0301810** |
| Connection cables | |
| FMS-AK0200 | **0301820** |
| FMS-AK0500 | **0301821** |
| FMS-AK1000 | **0301822** |
| FMS-AK2000 | **0301823** |

## Finger blanks

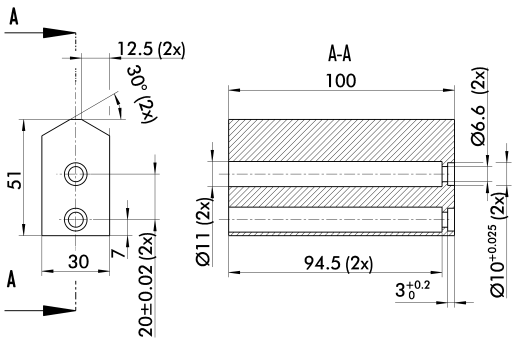


Finger blanks for customized subsequent machining

| Description | ID | Material | Scope of delivery |
|---|---|---|---|
| Finger blanks | | | |
| ABR-plus 100 | **0300012** | Aluminum | 1 |
| SBR-plus 100 | **0300022** | 16 MnCr 5 | 1 |

You can find more detailed information and individual parts of the above-mentioned accessories in the “Accessories” catalog section.

## Tolerance compensation unit

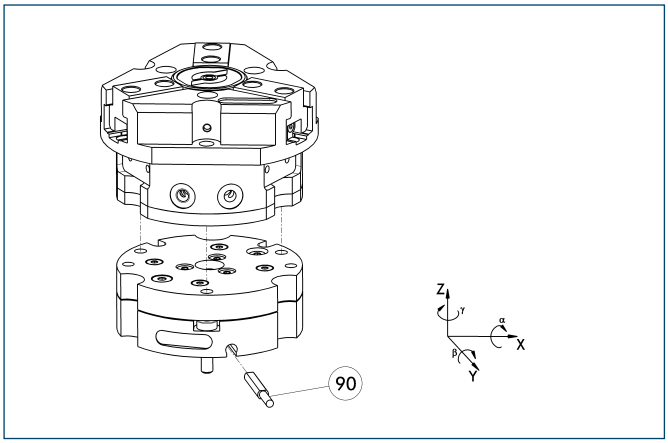


(90) Monitoring of locking

Grippers can be directly mounted without an adapter plate. Tolerance compensation unit and gripper have an identical screw connection diagram. Therefore the tolerance compensation units can be assembled later. Please consider the additional assembly height of the tolerance compensation unit. For details see catalog “Robot Accessories”.

| Description | ID | Locking | Deflection |
|---|---|---|---|
| Compensation unit | | | |
| TCU-100-2-MV-Z | **0324794** | Yes | |
| TCU-100-2-OV-Z | **0324799** | No | |

## Programmable magnetic switch

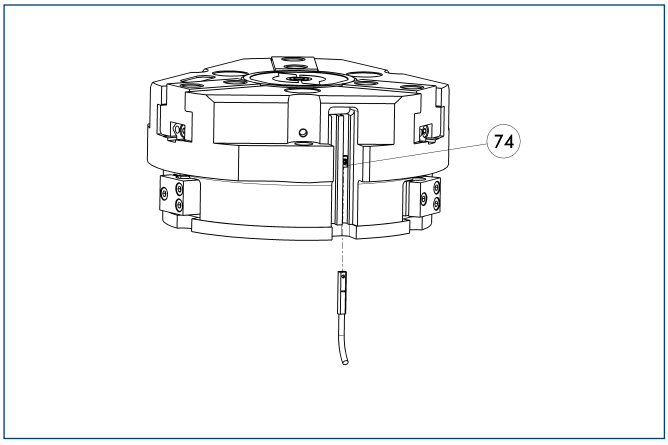


(74) Stop for MMS-P

Position monitoring with two programmable positions per sensor. The end position monitoring is mounted in the C-slot.

| Description | ID | Recommended product |
|---|---|---|
| Programmable magnetic switch | | |
| MMS-P 22-S-M8-PNP | **0301370** | • |
| MMSK-P 22-S-PNP | **0301371** | |
| Connection cables | | |
| KA BG08-L 4P-0500 | **0307767** | |
| KA BG08-L 4P-1000 | **0307768** | |
| KA BW08-L 4P-0500 | **0307765** | |
| KA BW08-L 4P-1000 | **0307766** | |
| Sensor Distributor | | |
| V2-M8-4P-2XM8-3P | **0301380** | |

ⓘ Please note the minimum permitted bending radii for the sensor cables, which are generally 35 mm.

ⓘ Per gripper one sensor (closer/NO) is required, optionally a cable extension.

## Compensation unit with spring reset

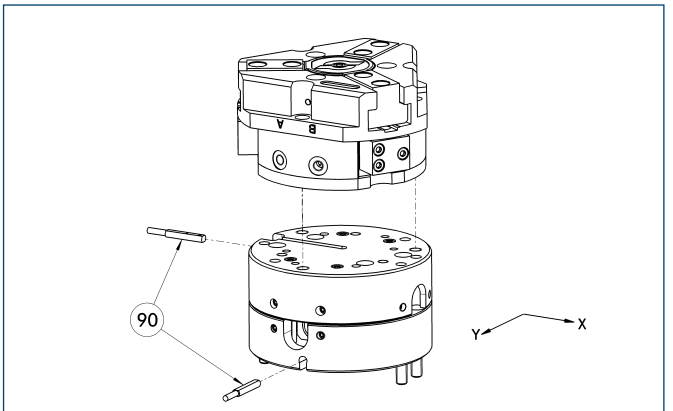


(90) Monitoring

Grippers can be directly mounted without using an adapter plate. For details see our catalog “Robot Accessories”.

| Description | ID | Compensation travel | Reset force |
|---|---|---|---|
| Compensation unit | | | |
| AGE-F-XY-080-1 | **0324960** | ±5 mm | 28.3 N |
| AGE-F-XY-080-2 | **0324961** | ±5 mm | 42.5 N |
| AGE-F-XY-080-3 | **0324962** | ±5 mm | 47.6 N |

## Electronic magnetic switches

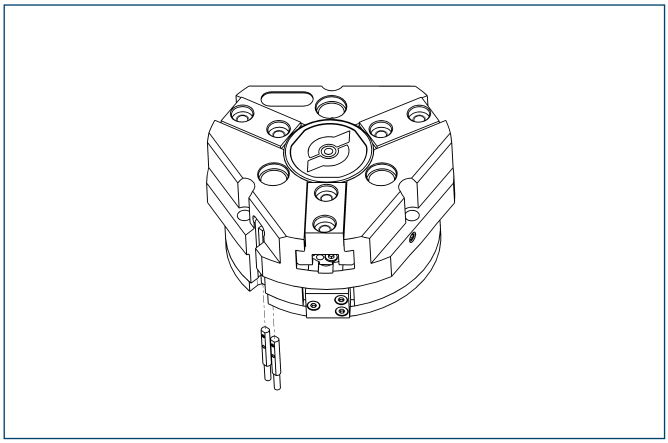

End position monitoring for mounting in the C-slot

| Description | ID | Recommended product |
|---|---|---|
| Electronic magnetic switches | | |
| MMS 22-S-M5-PNP | **0301438** | |
| MMS 22-S-M5-NPN | **0301439** | |
| MMS 22-S-M8-PNP | **0301432** | • |
| MMS 22-S-M8-NPN | **0301433** | |
| MMSK 22-S-PNP | **0301434** | |
| MMSK 22-S-NPN | **0301435** | |
| Electronic magnetic switches with lateral cable outlet | | |
| MMS 22-S-M5-PNP-SA | **0301448** | |
| MMS 22-S-M5-NPN-SA | **0301449** | |
| MMS 22-S-M8-PNP-SA | **0301442** | • |
| MMS 22-S-M8-NPN-SA | **0301443** | |
| MMSK 22-S-PNP-SA | **0301444** | |
| MMSK 22-S-NPN-SA | **0301445** | |
| Reed Switches | | |
| RMS 22-S-M8 | **0377720** | • |
| Connection cables | | |
| KA BG05-L 3P-0300 | **0301652** | |
| KA BG08-L 3P-0300-PNP | **0301622** | |
| KA BG08-L 3P-0500-PNP | **0301623** | |
| KA BW05-L 3P-0300 | **0301650** | |
| KA BW08-L 3P-0300-NPN | **0301602** | |
| KA BW08-L 3P-0300-PNP | **0301594** | |
| KA BW08-L 3P-0500-NPN | **9641116** | |
| KA BW08-L 3P-0500-PNP | **0301502** | |
| Cable extensions | | |
| KV BW08-SG08 3P-0030-PNP | **0301495** | |
| KV BW08-SG08 3P-0100-PNP | **0301496** | |
| KV BW08-SG08 3P-0200-PNP | **0301497** | |

ⓘ Two sensors (closer/NO) are required for each gripper, plus extension cables as an option.

ⓘ Please note the minimum permitted bending radii for the sensor cables, which are generally 35 mm.

## Inductive proximity switches

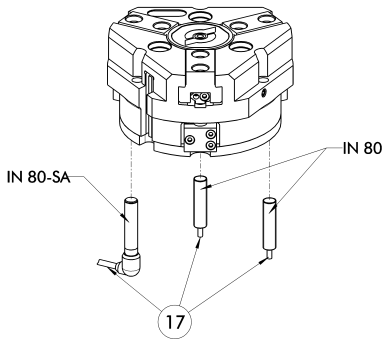


⑰ Cable outlet

End position monitoring for direct mounting

| Description | ID | Recommended product |
|---|---|---|
| Inductive proximity switches | | |
| IN 80-S-M8 | **0301478** | • |
| IN 80-S-M12 | **0301578** | |
| INK 80-S | **0301550** | |
| Inductive proximity switch with lateral outlet | | |
| IN 80-S-M12-SA | **0301587** | |
| IN 80-S-M8-SA | **0301483** | • |
| INK 80-S-SA | **0301566** | |
| Connection cables | | |
| KA BG08-L 3P-0300-PNP | **0301622** | |
| KA BG08-L 3P-0500-PNP | **0301623** | |
| KA BG12-L 3P-0500-PNP | **30016369** | |
| KA BW08-L 3P-0300-PNP | **0301594** | |
| KA BW08-L 3P-0500-PNP | **0301502** | |
| KA BW12-L 3P-0300-PNP | **0301503** | |
| KA BW12-L 3P-0500-PNP | **0301507** | |
| Cable extensions | | |
| KV BG12-SG12 3P-0030-PNP | **0301999** | |
| KV BG12-SG12 3P-0060-PNP | **0301998** | |
| KV BW08-SG08 3P-0030-PNP | **0301495** | |
| KV BW08-SG08 3P-0100-PNP | **0301496** | |
| KV BW08-SG08 3P-0200-PNP | **0301497** | |
| KV BW12-SG12 3P-0030-PNP | **0301595** | |
| KV BW12-SG12 3P-0100-PNP | **0301596** | |
| KV BW12-SG12 3P-0200-PNP | **0301597** | |

ⓘ Two sensors (closer/NO) are required for each gripper, plus extension cables as an option.

ⓘ Please note the minimum permitted bending radii for the sensor cables, which are generally 35 mm.

You can find more detailed information and individual parts of the above-mentioned accessories in the “Accessories” catalog section.

## Cylindrical Reed Switches

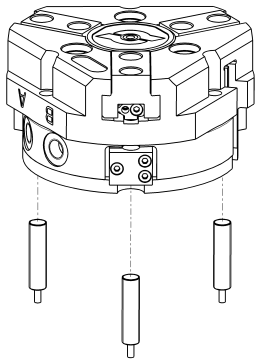

End position monitoring mounted with mounting kit

| Description | ID |
|---|---|
| Mounting kit for proximity switch | |
| AS-RMS 80 PGN/ PZN-plus 100/125 | **0377726** |
| Reed Switches | |
| RMS 80-S-M8 | **0377721** |

- Two sensors (closer/NO) are required for each gripper, plus extension cables as an option.
- This mounting kit needs to be ordered optionally as an accessory.
- Please note the minimum permitted bending radii for the sensor cables, which are generally 35 mm.

## Analog position sensor

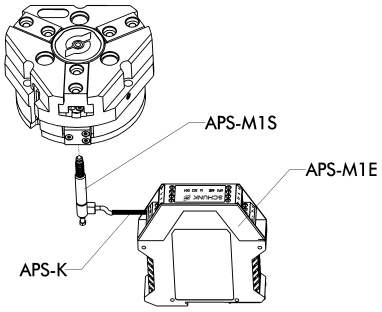


Analog multi position monitoring for any desired positions

| Description | ID |
|---|---|
| Mounting kit | |
| AS-APS-M1-100/1 | **0302079** |
| Connection cables | |
| APS-K0200 | **0302066** |
| APS-K0700 | **0302068** |
| Electronic Processor | |
| APS-M1E | **0302064** |
| Sensor | |
| APS-M1S | **0302062** |

- When using an APS system, for each gripper a mounting kit (AS-APS), an APS sensor (APS-M 1S, incl. 3 m cable) as well as an electronics (APS-M1e) are required.
- An extension cable (APS-K) can be connected between the sensor and the electronics as an option. The max. cable length between the sensor and the electronics is 10 m, between the electronics and their control unit (PLC) it is max. 1 m.

You can find more detailed information and individual parts of the above-mentioned accessories in the “Accessories” catalog section.

## Flexible Position Sensor

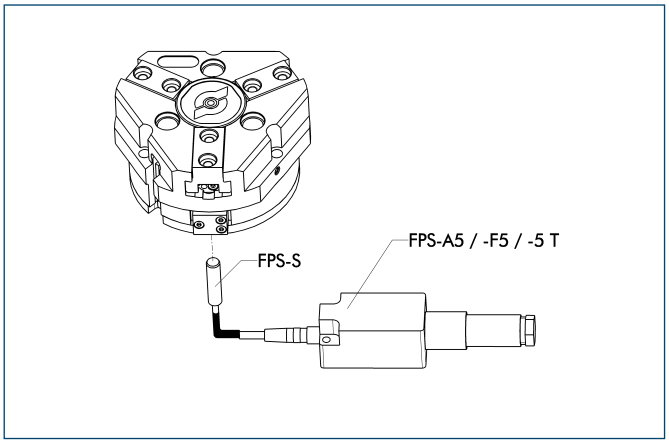


Flexible position monitoring of up to five positions

| Description | ID |
|---|---|
| Mounting kit for FPS | |
| AS-PGN/PZN-plus 100/1 | **0301634** |
| Electronic Processor | |
| FPS-F5 | **0301805** |
| FPS-F5 T | **0301807** |
| Sensor | |
| FPS-S M8 | **0301704** |

ⓘ When using a FPS system, a FPS sensor (FPS-S) and a control unit (FPS-F5 / F5 T or A5) are required for each gripper as well as a mounting kit (AS), if listed. Cable extensions (KV) are available as options in the “Accessories” catalog section.

You can find more detailed information and individual parts of the above-mentioned accessories in the “Accessories” catalog section.

# JGZ 125

**Pneumatic • 3-Finger Centric Gripper • Universal Gripper**



## Gripping force, I.D. gripping

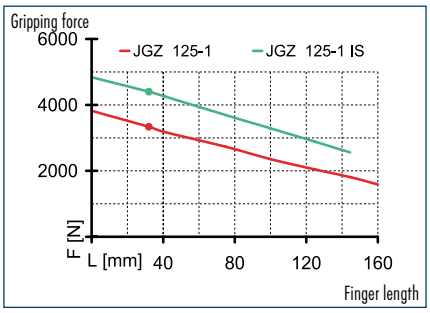


## Gripping force, O.D. gripping

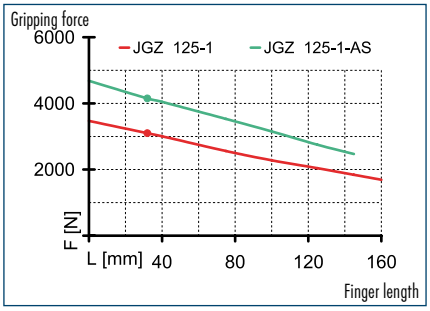


## Finger load

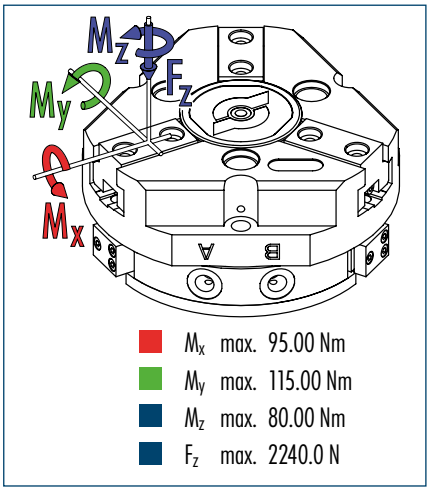


ⓘ The indicated moments and forces are static values, apply per base jaw and may occur simultaneously. $M_y$ may arise in addition to the moment generated by the gripping force itself. If the max. permitted finger weight is exceeded, it is imperative to throttle the air pressure so that the jaw movement occurs without any hitting or bouncing. Service life may be reduced.

## Technical data

| Description | | JGZ 125-1 | JGZ 125-1-AS | JGZ 125-1-IS |
|---|---|---|---|---|
| **ID** | | **0308950** | **0308951** | **0308952** |
| Stroke per finger | [mm] | 13 | 13 | 13 |
| Closing force | [N] | 3100 | 4150 | |
| Opening force | [N] | 3330 | | 4400 |
| Min. spring force | [N] | | 1050 | 1070 |
| Weight | [kg] | 2.8 | 3.6 | 3.6 |
| Recommended workpiece weight | [kg] | 15.5 | 15.5 | 15.5 |
| Air consumption per double stroke | [cm³] | 230 | 230 | 230 |
| Min./max. operating pressure | [bar] | 2/8 | 4/6.5 | 4/6.5 |
| Nominal operating pressure | [bar] | 6 | 6 | 6 |
| Closing/opening time | [s] | 0.2/0.2 | 0.17/0.35 | 0.35/0.17 |
| Max. permitted finger length | [mm] | 160 | 145 | 145 |
| Max. permitted weight per finger | [kg] | 2.1 | 2.1 | 2.1 |
| IP class | | 40 | 40 | 40 |
| Min./max. ambient temperature | [°C] | -10/90 | -10/90 | -10/90 |
| Repeat accuracy | [mm] | 0.01 | 0.01 | 0.01 |
| Cleanroom class ISO-classification 14644-1 | | 5 | 5 | 5 |

## Main view

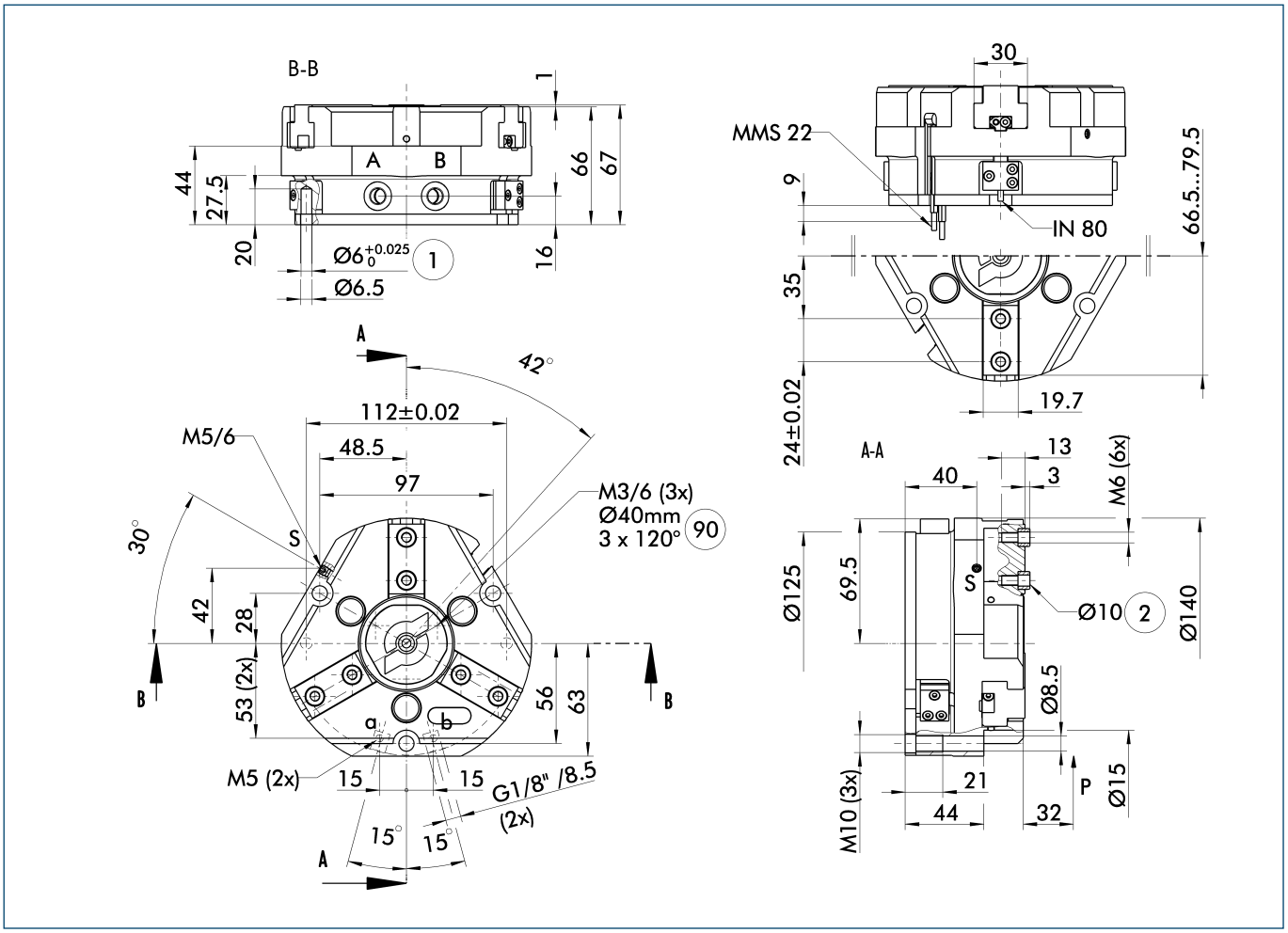


The drawing shows the gripper in the basic version with closed jaws, the dimensions do not include the options described below.

ⓘ The SDV-P pressure maintenance valve can also be used for I.D. or O.D. gripping alternatively or in addition to the spring-loaded, mechanical gripping force maintenance device (see "Accessories" catalog section).

A, a Main/direct connection, gripper opening
B, b Main/direct connection, gripper closing
S Air purge connection
① Gripper connection
② Finger connection
⑨⓪ Thread below the cover for fastening external attachments

## Hose-free direct connection

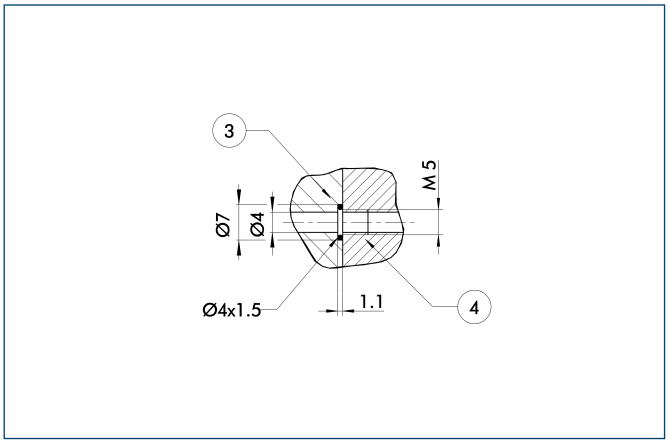


③ Adapter
④ Gripper

The direct connection is used for supplying compressed air without hoses. Instead, the pressure medium is fed through bore-holes in the mounting plate.

## AS/IS gripping force maintenance device

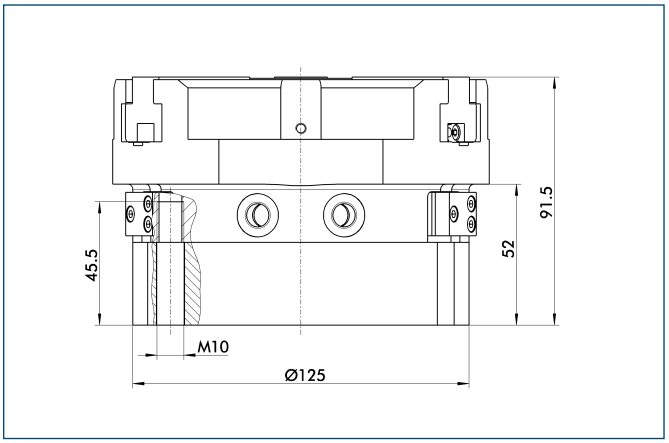


The mechanical gripping force maintenance device ensures a minimum gripping force even in case of pressure drop. This acts as closing force in the AS version, and as opening force in the IS version. In addition, the gripping force maintenance device can also be used for increasing the gripping force or for single-acting gripping.

## Spring-loaded pressure piece

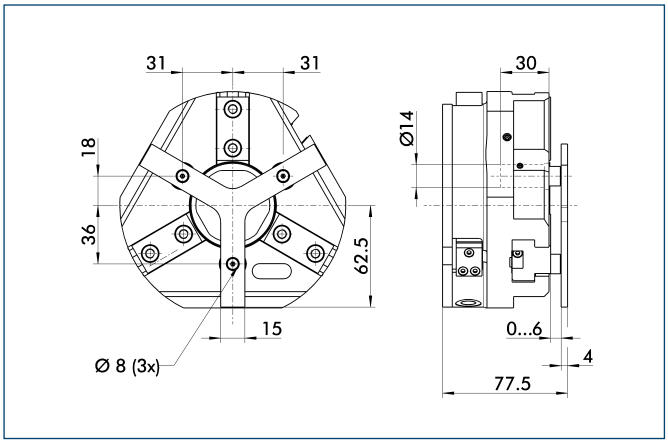


For spring-supported positioning of the workpiece against a stop after the gripper has opened. Especially developed for loading machines.

| Description | ID | Stroke | Min. force |
|---|---|---|---|
| Spring-loaded pressure piece | | | |
| A-PZN-plus/DPZ-plus 125 | **0303723** | 6 mm | 105 N |

## Quick-change Jaw System

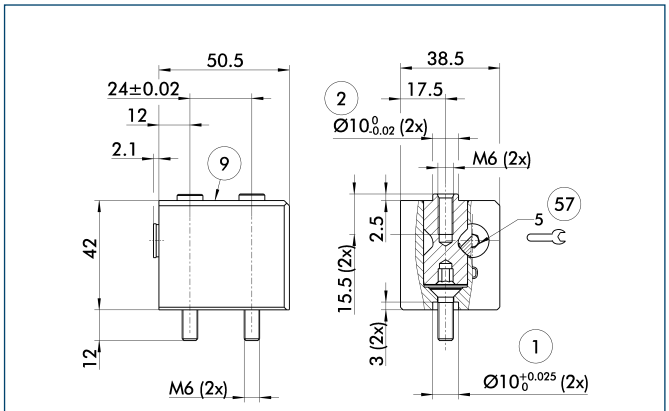


① Gripper connection
② Finger connection
⑨ For mounting screw connection diagram, see basic version
⑤⑦ Locking

The BSWS quick-change jaw system enables top jaws to be changed on the gripper manually and rapidly. An adapter (BSWS-A) and a base (BSWS-B) are required for each gripper jaw.
For a reverse assembly without height set-up, one adapter (BSWS-A) and a kit (BSWS-U) per gripper jaw are required. Another effect of the BSWS-U is, that there are no disturbing fastening bores in the finger contour.

| Description | ID |
|---|---|
| Quick-change Jaw System adapter | |
| BSWS-A 125 | **0303028** |
| Quick-change Jaw System base | |
| BSWS-B 125 | **0303029** |
| Quick-change Jaw System reversed | |
| BSWS-U 125 | **0303044** |

You can find more detailed information and individual parts of the above-mentioned accessories in the “Accessories” catalog section.

## Universal intermediate jaw

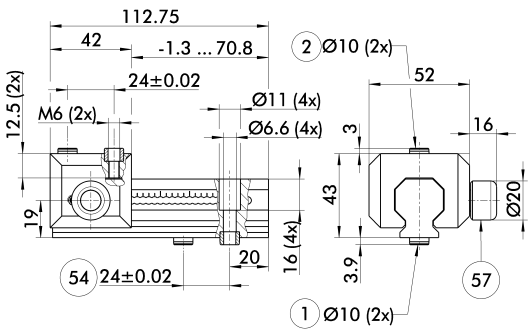


① Gripper connection
② Finger connection
54 Optional right or left connection
57 Locking

The universal intermediate jaw allows fast tool-free and reliable plugging and shifting of top jaws at the gripper.

| Description | ID | Grid dimension |
|---|---|---|
| Universal intermediate jaw | | |
| UZB 125 | **0300045** | 3 mm |
| UZB-S 125 | **5518273** | 3 mm |

ⓘ The slide UZB-S can be removed completely and has to be ordered separately. Moreover, it allows a fast jaw change.

## Force measuring jaws

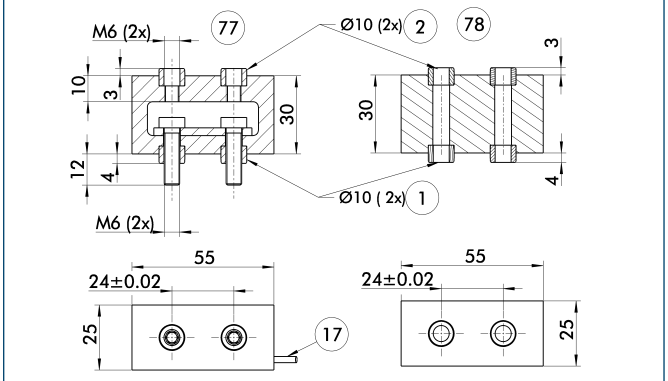


① Gripper connection
② Finger connection
17 Cable outlet
77 Active intermediate jaws
78 Passive intermediate jaws

Force measuring jaws measure gripping forces, but can also determine workpiece weights or dimensional deviations. There are active and passive intermediate jaws (FMS-ZBA or FMS-ZBP). At least one active force measuring jaw is required per gripper, the rest can be passive. For each active jaw, a FMS-A1 control unit and a FMS-A connection cable are required.

| Description | ID |
|---|---|
| Active intermediate jaws | |
| FMS-ZBA 125 | **0301838** |
| Passive intermediate jaws | |
| FMS-ZBP 125 | **0301839** |
| Electronic Processor | |
| FMS-A1 | **0301810** |
| Connection cables | |
| FMS-AK0200 | **0301820** |
| FMS-AK0500 | **0301821** |
| FMS-AK1000 | **0301822** |
| FMS-AK2000 | **0301823** |

## Finger blanks

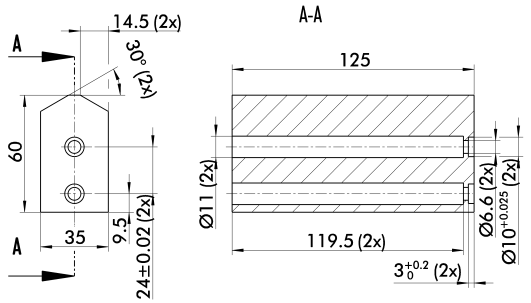


Finger blanks for customized subsequent machining

| Description | ID | Material | Scope of delivery |
|---|---|---|---|
| Finger blanks | | | |
| ABR-plus 125 | **0300013** | Aluminum | 1 |
| SBR-plus 125 | **0300023** | 16 MnCr 5 | 1 |

You can find more detailed information and individual parts of the above-mentioned accessories in the “Accessories” catalog section.

## Tolerance compensation unit

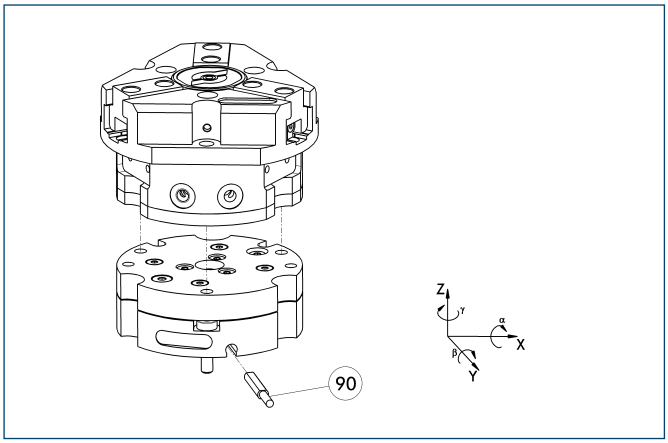


(90) Monitoring of locking

Grippers can be directly mounted without an adapter plate. Tolerance compensation unit and gripper have an identical screw connection diagram. Therefore the tolerance compensation units can be assembled later. Please consider the additional assembly height of the tolerance compensation unit. For details see catalog “Robot Accessories”.

| Description | ID | Locking | Deflection |
|---|---|---|---|
| Compensation unit | | | |
| TCU-125-3-MV-Z | **0324820** | Yes | |
| TCU-125-3-OV-Z | **0324821** | No | |

## Programmable magnetic switch

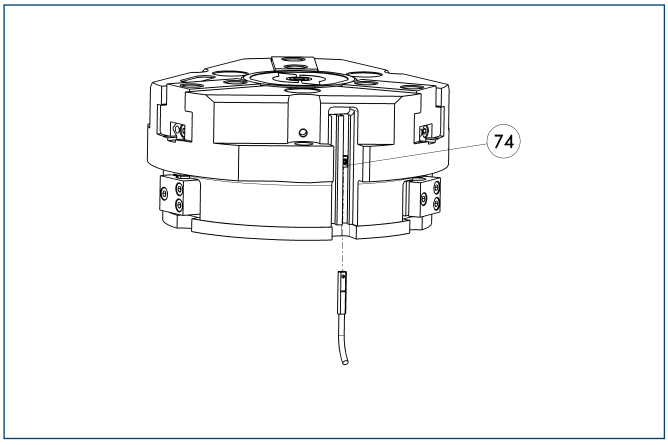


(74) Stop for MMS-P

Position monitoring with two programmable positions per sensor. The end position monitoring is mounted in the C-slot.

| Description | ID | Recommended product |
|---|---|---|
| Programmable magnetic switch | | |
| MMS-P 22-S-M8-PNP | **0301370** | • |
| MMSK-P 22-S-PNP | **0301371** | |
| Connection cables | | |
| KA BG08-L 4P-0500 | **0307767** | |
| KA BG08-L 4P-1000 | **0307768** | |
| KA BW08-L 4P-0500 | **0307765** | |
| KA BW08-L 4P-1000 | **0307766** | |
| Sensor Distributor | | |
| V2-M8-4P-2XM8-3P | **0301380** | |

ⓘ Please note the minimum permitted bending radii for the sensor cables, which are generally 35 mm.

ⓘ Per gripper one sensor (closer/NO) is required, optionally a cable extension.

## Compensation unit with spring reset

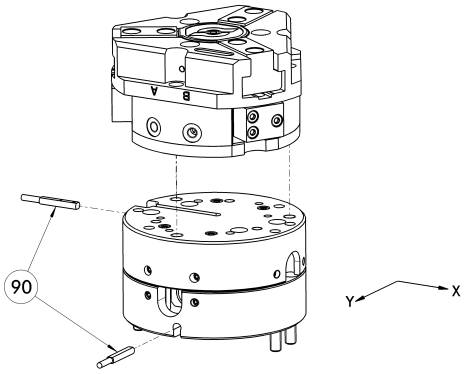


(90) Monitoring

Grippers can be directly mounted without using an adapter plate. For details see our catalog “Robot Accessories”.

| Description | ID | Compensation travel | Reset force |
|---|---|---|---|
| Compensation unit | | | |
| AGE-F-XY-080-1 | **0324960** | ±5 mm | 28.3 N |
| AGE-F-XY-080-2 | **0324961** | ±5 mm | 42.5 N |
| AGE-F-XY-080-3 | **0324962** | ±5 mm | 47.6 N |

## Electronic magnetic switches

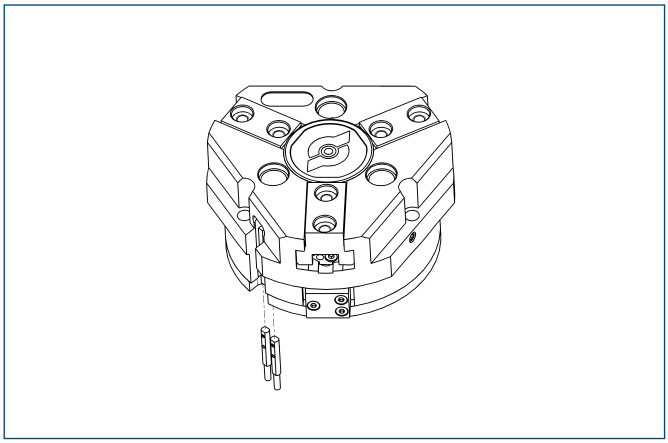

End position monitoring for mounting in the C-slot

| Description | ID | Recommended product |
|---|---|---|
| Electronic magnetic switches | | |
| MMS 22-S-M5-PNP | **0301438** | |
| MMS 22-S-M5-NPN | **0301439** | |
| MMS 22-S-M8-PNP | **0301432** | • |
| MMS 22-S-M8-NPN | **0301433** | |
| MMSK 22-S-PNP | **0301434** | |
| MMSK 22-S-NPN | **0301435** | |
| Electronic magnetic switches with lateral cable outlet | | |
| MMS 22-S-M5-PNP-SA | **0301448** | |
| MMS 22-S-M5-NPN-SA | **0301449** | |
| MMS 22-S-M8-PNP-SA | **0301442** | • |
| MMS 22-S-M8-NPN-SA | **0301443** | |
| MMSK 22-S-PNP-SA | **0301444** | |
| MMSK 22-S-NPN-SA | **0301445** | |
| Reed Switches | | |
| RMS 22-S-M8 | **0377720** | • |
| Connection cables | | |
| KA BG05-L 3P-0300 | **0301652** | |
| KA BG08-L 3P-0300-PNP | **0301622** | |
| KA BG08-L 3P-0500-PNP | **0301623** | |
| KA BW05-L 3P-0300 | **0301650** | |
| KA BW08-L 3P-0300-NPN | **0301602** | |
| KA BW08-L 3P-0300-PNP | **0301594** | |
| KA BW08-L 3P-0500-NPN | **9641116** | |
| KA BW08-L 3P-0500-PNP | **0301502** | |
| Cable extensions | | |
| KV BW08-SG08 3P-0030-PNP | **0301495** | |
| KV BW08-SG08 3P-0100-PNP | **0301496** | |
| KV BW08-SG08 3P-0200-PNP | **0301497** | |

ⓘ Two sensors (closer/NO) are required for each gripper, plus extension cables as an option.

ⓘ Please note the minimum permitted bending radii for the sensor cables, which are generally 35 mm.

## Inductive proximity switches

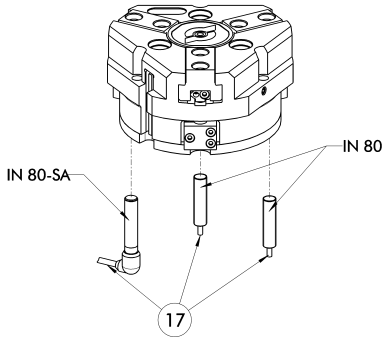


⑰ Cable outlet

End position monitoring for direct mounting

| Description | ID | Recommended product |
|---|---|---|
| Inductive proximity switches | | |
| IN 80-S-M8 | **0301478** | • |
| IN 80-S-M12 | **0301578** | |
| INK 80-S | **0301550** | |
| Inductive proximity switch with lateral outlet | | |
| IN 80-S-M12-SA | **0301587** | |
| IN 80-S-M8-SA | **0301483** | • |
| INK 80-S-SA | **0301566** | |
| Connection cables | | |
| KA BG08-L 3P-0300-PNP | **0301622** | |
| KA BG08-L 3P-0500-PNP | **0301623** | |
| KA BG12-L 3P-0500-PNP | **30016369** | |
| KA BW08-L 3P-0300-PNP | **0301594** | |
| KA BW08-L 3P-0500-PNP | **0301502** | |
| KA BW12-L 3P-0300-PNP | **0301503** | |
| KA BW12-L 3P-0500-PNP | **0301507** | |
| Cable extensions | | |
| KV BG12-SG12 3P-0030-PNP | **0301999** | |
| KV BG12-SG12 3P-0060-PNP | **0301998** | |
| KV BW08-SG08 3P-0030-PNP | **0301495** | |
| KV BW08-SG08 3P-0100-PNP | **0301496** | |
| KV BW08-SG08 3P-0200-PNP | **0301497** | |
| KV BW12-SG12 3P-0030-PNP | **0301595** | |
| KV BW12-SG12 3P-0100-PNP | **0301596** | |
| KV BW12-SG12 3P-0200-PNP | **0301597** | |

ⓘ Two sensors (closer/NO) are required for each gripper, plus extension cables as an option.

ⓘ Please note the minimum permitted bending radii for the sensor cables, which are generally 35 mm.

You can find more detailed information and individual parts of the above-mentioned accessories in the “Accessories” catalog section.

## Cylindrical Reed Switches

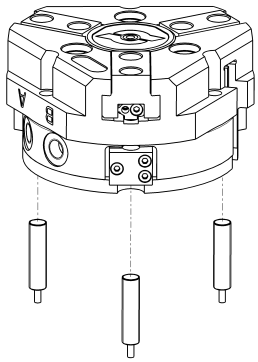

End position monitoring mounted with mounting kit

| Description | ID |
|---|---|
| Mounting kit for proximity switch | |
| AS-RMS 80<br>PGN/PZN-plus 100/125 | **0377726** |
| Reed Switches | |
| RMS 80-S-M8 | **0377721** |

- Two sensors (closer/NO) are required for each gripper, plus extension cables as an option.
- This mounting kit needs to be ordered optionally as an accessory.
- Please note the minimum permitted bending radii for the sensor cables, which are generally 35 mm.

## Analog position sensor

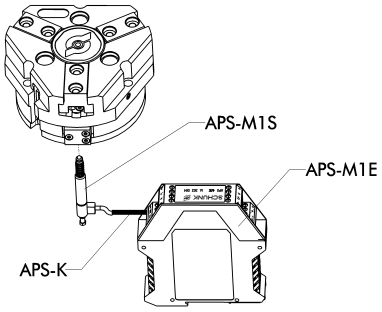


Analog multi position monitoring for any desired positions

| Description | ID |
|---|---|
| Mounting kit | |
| AS-APS-M1-125/1 | **0302081** |
| Connection cables | |
| APS-K0200 | **0302066** |
| APS-K0700 | **0302068** |
| Electronic Processor | |
| APS-M1E | **0302064** |
| Sensor | |
| APS-M1S | **0302062** |

- When using an APS system, for each gripper a mounting kit (AS-APS), an APS sensor (APS-M 1S, incl. 3 m cable) as well as an electronics (APS-M1e) are required.
- An extension cable (APS-K) can be connected between the sensor and the electronics as an option. The max. cable length between the sensor and the electronics is 10 m, between the electronics and their control unit (PLC) it is max. 1 m.

You can find more detailed information and individual parts of the above-mentioned accessories in the “Accessories” catalog section.

## Flexible Position Sensor

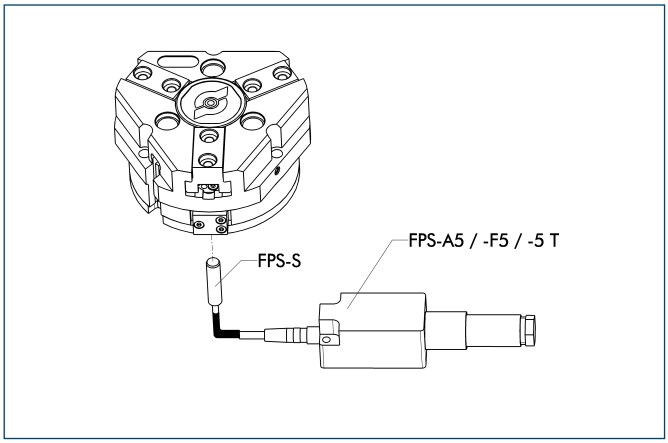


Flexible position monitoring of up to five positions

| Description | ID |
|---|---|
| Mounting kit for FPS | |
| AS-PGN/PZN-plus 125/1, PZB 160 | **0301636** |
| Electronic Processor | |
| FPS-F5 | **0301805** |
| FPS-F5 T | **0301807** |
| Sensor | |
| FPS-S M8 | **0301704** |

ⓘ When using a FPS system, a FPS sensor (FPS-S) and a control unit (FPS-F5 / F5 T or A5) are required for each gripper as well as a mounting kit (AS), if listed. Cable extensions (KV) are available as options in the “Accessories” catalog section.

You can find more detailed information and individual parts of the above-mentioned accessories in the “Accessories” catalog section.

# JGZ 160

**Pneumatic • 3-Finger Centric Gripper • Universal Gripper**



## Gripping force, I.D. gripping

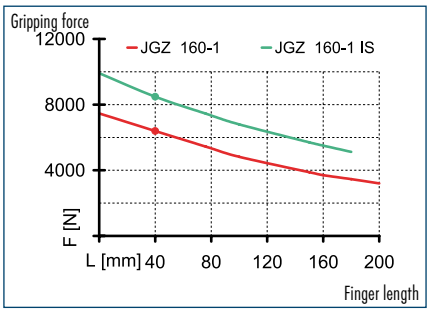


## Gripping force, O.D. gripping

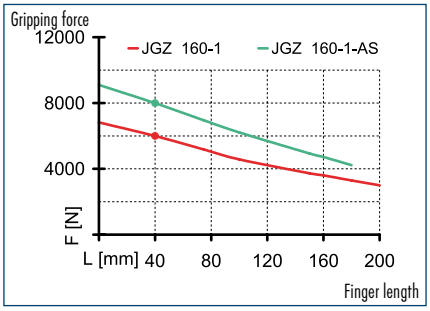


## Finger load

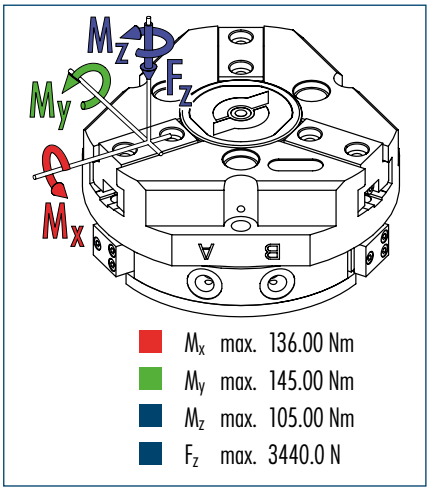


ⓘ The indicated moments and forces are static values, apply per base jaw and may occur simultaneously. $M_y$ may arise in addition to the moment generated by the gripping force itself. If the max. permitted finger weight is exceeded, it is imperative to throttle the air pressure so that the jaw movement occurs without any hitting or bouncing. Service life may be reduced.

## Technical data

| Description | | JGZ 160-1 | JGZ 160-1-AS | JGZ 160-1-IS |
|---|---|---|---|---|
| **ID** | | **0308960** | **0308961** | **0308962** |
| Stroke per finger | [mm] | 16 | 16 | 16 |
| Closing force | [N] | 6000 | 7990 | |
| Opening force | [N] | 6390 | | 8480 |
| Min. spring force | [N] | | 1990 | 2090 |
| Weight | [kg] | 5.6 | 8 | 8 |
| Recommended workpiece weight | [kg] | 30 | 30 | 30 |
| Air consumption per double stroke | [cm³] | 520 | 520 | 520 |
| Min./max. operating pressure | [bar] | 2/8 | 4/6.5 | 4/6.5 |
| Nominal operating pressure | [bar] | 6 | 6 | 6 |
| Closing/opening time | [s] | 0.5/0.5 | 0.4/0.8 | 0.8/0.4 |
| Max. permitted finger length | [mm] | 200 | 180 | 180 |
| Max. permitted weight per finger | [kg] | 3.5 | 3.5 | 3.5 |
| IP class | | 40 | 40 | 40 |
| Min./max. ambient temperature | [°C] | -10/90 | -10/90 | -10/90 |
| Repeat accuracy | [mm] | 0.02 | 0.02 | 0.02 |
| Cleanroom class ISO-classification 14644-1 | | 5 | 5 | 5 |

## Main view

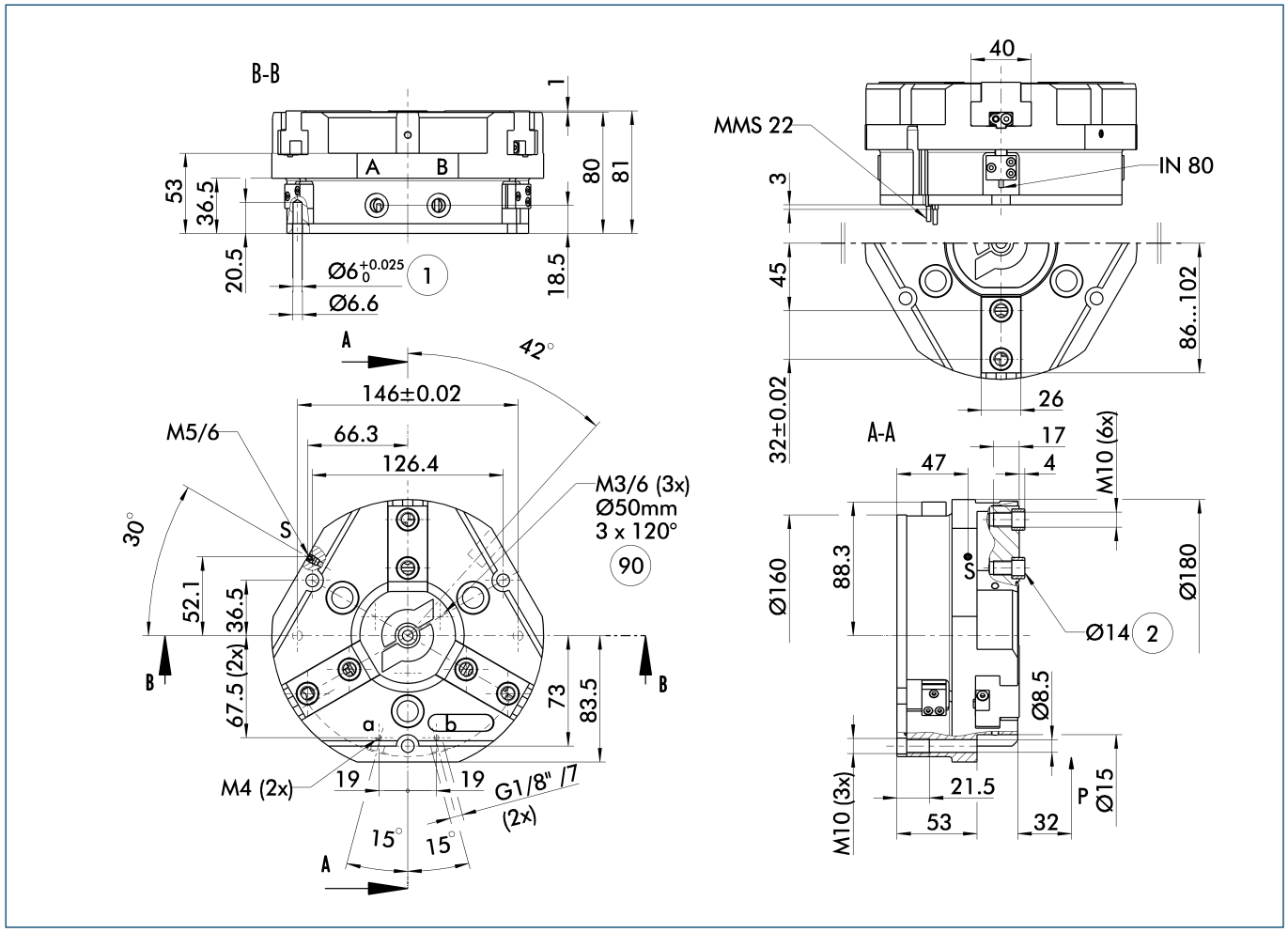


The drawing shows the gripper in the basic version with closed jaws, the dimensions do not include the options described below.

ⓘ The SDV-P pressure maintenance valve can also be used for I.D. or O.D. gripping alternatively or in addition to the spring-loaded, mechanical gripping force maintenance device (see "Accessories" catalog section).

A, a Main/direct connection, gripper opening
B, b Main/direct connection, gripper closing
S Air purge connection
① Gripper connection
② Finger connection
⑨⓪ Thread below the cover for fastening external attachments

## Hose-free direct connection

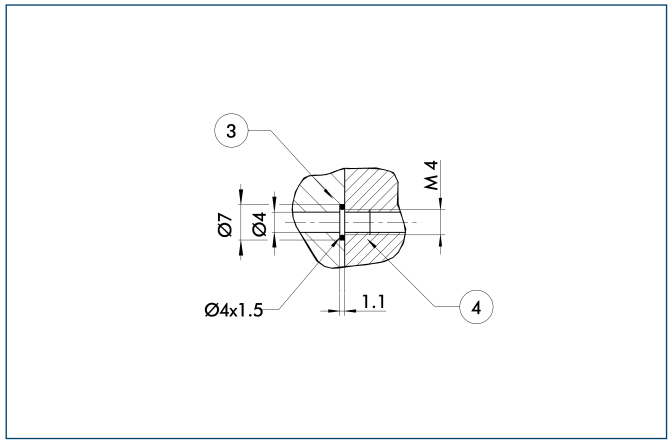


③ Adapter
④ Gripper

The direct connection is used for supplying compressed air without hoses. Instead, the pressure medium is fed through bore-holes in the mounting plate.

## AS/IS gripping force maintenance device

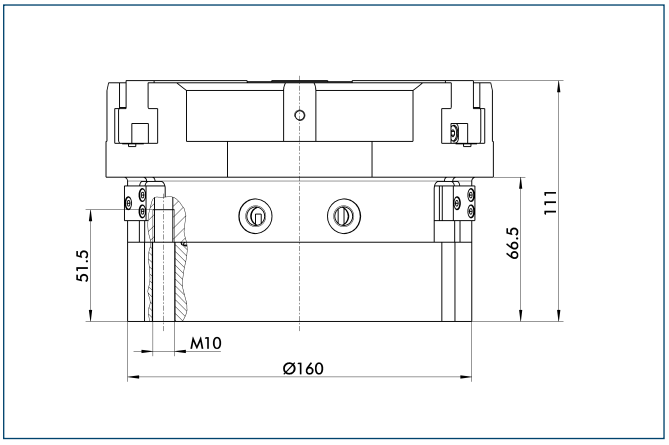


The mechanical gripping force maintenance device ensures a minimum gripping force even in case of pressure drop. This acts as closing force in the AS version, and as opening force in the IS version. In addition, the gripping force maintenance device can also be used for increasing the gripping force or for single-acting gripping.

## Spring-loaded pressure piece

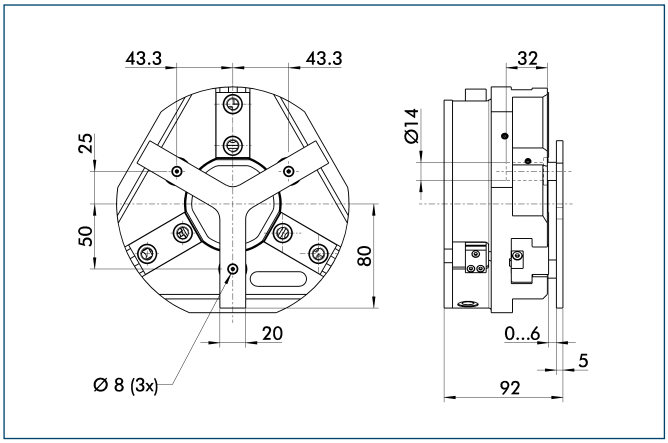


For spring-supported positioning of the workpiece against a stop after the gripper has opened. Especially developed for loading machines.

| Description | ID | Stroke | Min. force |
|---|---|---|---|
| Spring-loaded pressure piece | | | |
| A-PZN-plus/DPZ-plus 160 | **0303724** | 6 mm | 205 N |

## Quick-change Jaw System

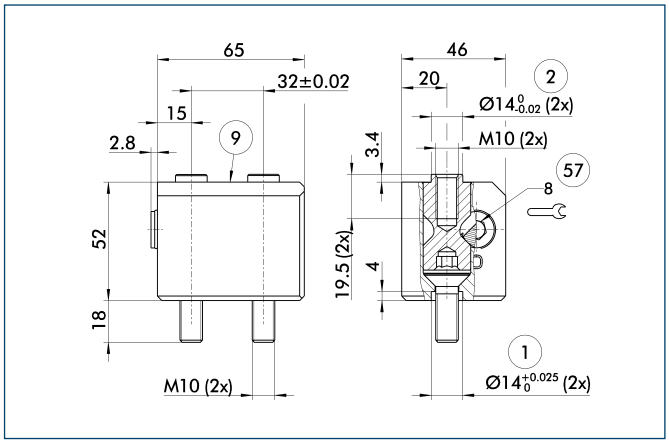


① Gripper connection
② Finger connection
⑨ For mounting screw connection diagram, see basic version
57 Locking

The BSWS quick-change jaw system enables top jaws to be changed on the gripper manually and rapidly. An adapter (BSWS-A) and a base (BSWS-B) are required for each gripper jaw.
For a reverse assembly without height set-up, one adapter (BSWS-A) and a kit (BSWS-U) per gripper jaw are required. Another effect of the BSWS-U is, that there are no disturbing fastening bores in the finger contour.

| Description | ID |
|---|---|
| Quick-change Jaw System adapter | |
| BSWS-A 160 | **0303030** |
| Quick-change Jaw System base | |
| BSWS-B 160 | **0303031** |
| Quick-change Jaw System reversed | |
| BSWS-U 160 | **0303045** |

You can find more detailed information and individual parts of the above-mentioned accessories in the “Accessories” catalog section.

## Universal intermediate jaw

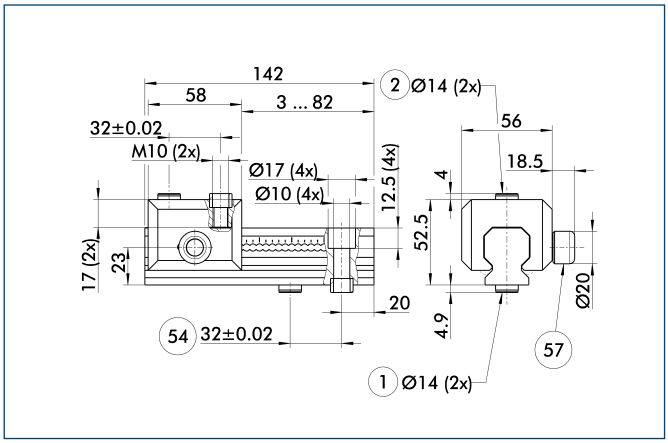


① Gripper connection
② Finger connection
54 Optional right or left connection
57 Locking

The universal intermediate jaw allows fast tool-free and reliable plugging and shifting of top jaws at the gripper.

| Description | ID | Grid dimension |
|---|---|---|
| Universal intermediate jaw | | |
| UZB 160 | **0300046** | 4 mm |
| UZB-S 160 | **5518274** | 4 mm |

ⓘ The slide UZB-S can be removed completely and has to be ordered separately. Moreover, it allows a fast jaw change.

## Force measuring jaws

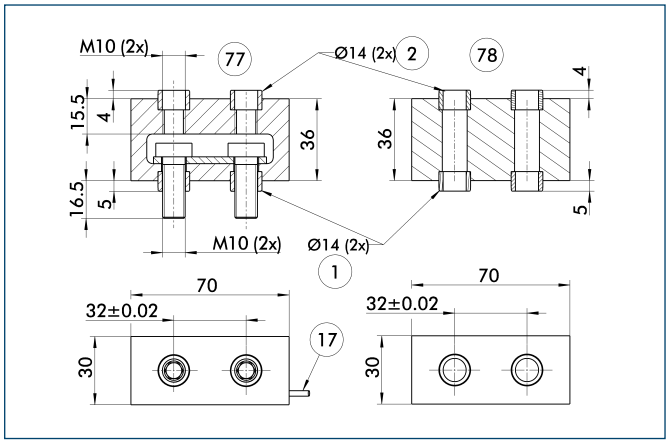


① Gripper connection
② Finger connection
17 Cable outlet
77 Active intermediate jaws
78 Passive intermediate jaws

Force measuring jaws measure gripping forces, but can also determine workpiece weights or dimensional deviations. There are active and passive intermediate jaws (FMS-ZBA or FMS-ZBP). At least one active force measuring jaw is required per gripper, the rest can be passive. For each active jaw, a FMS-A1 control unit and a FMS-A connection cable are required.

| Description | ID |
|---|---|
| Active intermediate jaws | |
| FMS-ZBA 160 | **0301840** |
| Passive intermediate jaws | |
| FMS-ZBP 160 | **0301841** |
| Electronic Processor | |
| FMS-A2 | **0301811** |
| Connection cables | |
| FMS-AK0200 | **0301820** |
| FMS-AK0500 | **0301821** |
| FMS-AK1000 | **0301822** |
| FMS-AK2000 | **0301823** |

## Finger blanks

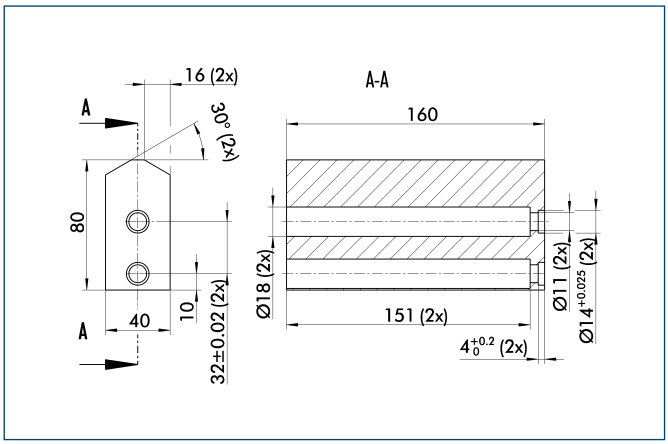


Finger blanks for customized subsequent machining

| Description | ID | Material | Scope of delivery |
|---|---|---|---|
| Finger blanks | | | |
| ABR-plus 160 | **0300014** | Aluminum | 1 |
| SBR-plus 160 | **0300024** | 16 MnCr 5 | 1 |

You can find more detailed information and individual parts of the above-mentioned accessories in the “Accessories” catalog section.

## Tolerance compensation unit

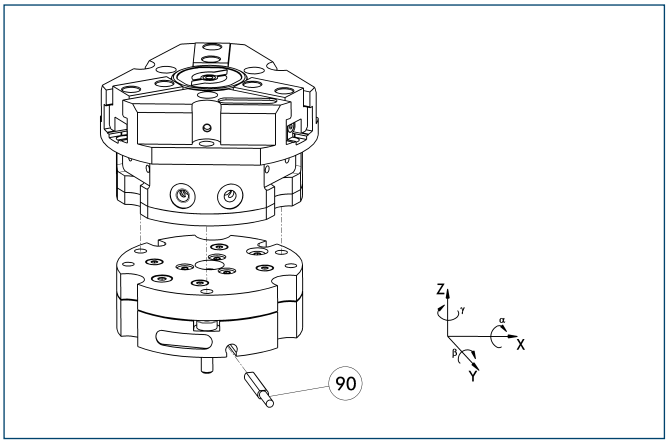


90 Monitoring of locking

Grippers can be directly mounted without an adapter plate. Tolerance compensation unit and gripper have an identical screw connection diagram. Therefore the tolerance compensation units can be assembled later. Please consider the additional assembly height of the tolerance compensation unit. For details see catalog “Robot Accessories”.

| Description | ID | Locking | Deflection |
|---|---|---|---|
| Compensation unit | | | |
| TCU-160-3-MV-Z | **0324838** | Yes | |
| TCU-160-3-OV-Z | **0324839** | No | |

## Programmable magnetic switch

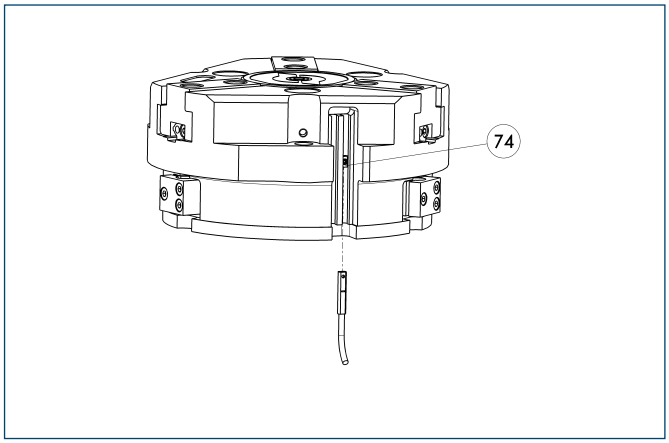


74 Stop for MMS-P

Position monitoring with two programmable positions per sensor. The end position monitoring is mounted in the C-slot.

| Description | ID | Recommended product |
|---|---|---|
| Programmable magnetic switch | | |
| MMS-P 22-S-M8-PNP | **0301370** | • |
| MMSK-P 22-S-PNP | **0301371** | |
| Connection cables | | |
| KA BG08-L 4P-0500 | **0307767** | |
| KA BG08-L 4P-1000 | **0307768** | |
| KA BW08-L 4P-0500 | **0307765** | |
| KA BW08-L 4P-1000 | **0307766** | |
| Sensor Distributor | | |
| V2-M8-4P-2XM8-3P | **0301380** | |

ⓘ Please note the minimum permitted bending radii for the sensor cables, which are generally 35 mm.

ⓘ Per gripper one sensor (closer/NO) is required, optionally a cable extension.

You can find more detailed information and individual parts of the above-mentioned accessories in the “Accessories” catalog section.

## Electronic magnetic switches

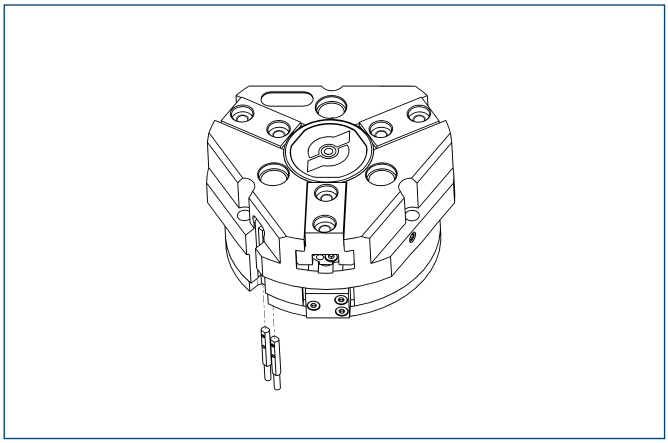

End position monitoring for mounting in the C-slot

| Description | ID | Recommended product |
|---|---|---|
| Electronic magnetic switches | | |
| MMS 22-S-M5-PNP | **0301438** | |
| MMS 22-S-M5-NPN | **0301439** | |
| MMS 22-S-M8-PNP | **0301432** | • |
| MMS 22-S-M8-NPN | **0301433** | |
| MMSK 22-S-PNP | **0301434** | |
| MMSK 22-S-NPN | **0301435** | |
| Electronic magnetic switches with lateral cable outlet | | |
| MMS 22-S-M5-PNP-SA | **0301448** | |
| MMS 22-S-M5-NPN-SA | **0301449** | |
| MMS 22-S-M8-PNP-SA | **0301442** | • |
| MMS 22-S-M8-NPN-SA | **0301443** | |
| MMSK 22-S-PNP-SA | **0301444** | |
| MMSK 22-S-NPN-SA | **0301445** | |
| Reed Switches | | |
| RMS 22-S-M8 | **0377720** | • |
| Connection cables | | |
| KA BG05-L 3P-0300 | **0301652** | |
| KA BG08-L 3P-0300-PNP | **0301622** | |
| KA BG08-L 3P-0500-PNP | **0301623** | |
| KA BW05-L 3P-0300 | **0301650** | |
| KA BW08-L 3P-0300-NPN | **0301602** | |
| KA BW08-L 3P-0300-PNP | **0301594** | |
| KA BW08-L 3P-0500-NPN | **9641116** | |
| KA BW08-L 3P-0500-PNP | **0301502** | |
| Cable extensions | | |
| KV BW08-SG08 3P-0030-PNP | **0301495** | |
| KV BW08-SG08 3P-0100-PNP | **0301496** | |
| KV BW08-SG08 3P-0200-PNP | **0301497** | |

ⓘ Two sensors (closer/NO) are required for each gripper, plus extension cables as an option.

ⓘ Please note the minimum permitted bending radii for the sensor cables, which are generally 35 mm.

## Inductive proximity switches

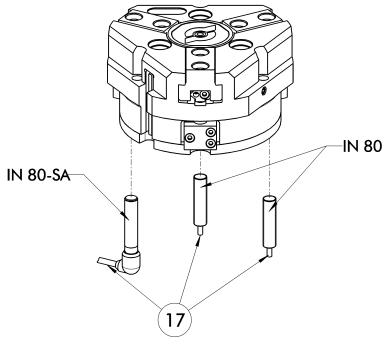


⑰ Cable outlet

End position monitoring for direct mounting

| Description | ID | Recommended product |
|---|---|---|
| Inductive proximity switches | | |
| IN 80-S-M8 | **0301478** | • |
| IN 80-S-M12 | **0301578** | |
| INK 80-S | **0301550** | |
| Inductive proximity switch with lateral outlet | | |
| IN 80-S-M12-SA | **0301587** | |
| INK 80-S-SA | **0301566** | |
| Connection cables | | |
| KA BG08-L 3P-0300-PNP | **0301622** | |
| KA BG08-L 3P-0500-PNP | **0301623** | |
| KA BG12-L 3P-0500-PNP | **30016369** | |
| KA BW08-L 3P-0300-PNP | **0301594** | |
| KA BW08-L 3P-0500-PNP | **0301502** | |
| KA BW12-L 3P-0300-PNP | **0301503** | |
| KA BW12-L 3P-0500-PNP | **0301507** | |
| Cable extensions | | |
| KV BG12-SG12 3P-0030-PNP | **0301999** | |
| KV BG12-SG12 3P-0060-PNP | **0301998** | |
| KV BW08-SG08 3P-0030-PNP | **0301495** | |
| KV BW08-SG08 3P-0100-PNP | **0301496** | |
| KV BW08-SG08 3P-0200-PNP | **0301497** | |
| KV BW12-SG12 3P-0030-PNP | **0301595** | |
| KV BW12-SG12 3P-0100-PNP | **0301596** | |
| KV BW12-SG12 3P-0200-PNP | **0301597** | |

ⓘ Two sensors (closer/NO) are required for each gripper, plus extension cables as an option.

ⓘ Please note the minimum permitted bending radii for the sensor cables, which are generally 35 mm.

You can find more detailed information and individual parts of the above-mentioned accessories in the “Accessories” catalog section.

## Cylindrical Reed Switches

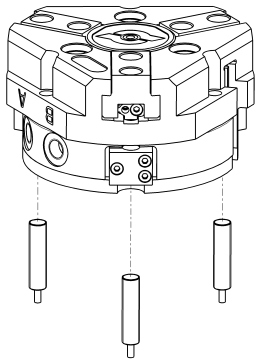

End position monitoring mounted with mounting kit

| Description | ID |
|---|---|
| Mounting kit for proximity switch | |
| AS-RMS 80<br>PGN/PZN-plus 160-380 | **0377727** |
| Reed Switches | |
| RMS 80-S-M8 | **0377721** |

- Two sensors (closer/NO) are required for each gripper, plus extension cables as an option.
- This mounting kit needs to be ordered optionally as an accessory.
- Please note the minimum permitted bending radii for the sensor cables, which are generally 35 mm.

## Analog position sensor

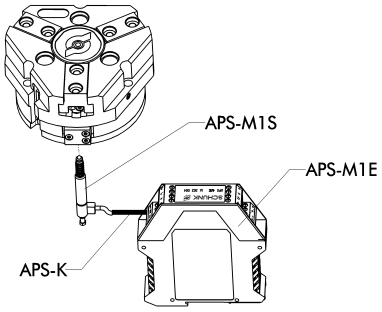


Analog multi position monitoring for any desired positions

| Description | ID |
|---|---|
| Mounting kit | |
| AS-APS-M1-160/1 and 240/2 | **0302083** |
| Connection cables | |
| APS-K0200 | **0302066** |
| APS-K0700 | **0302068** |
| Electronic Processor | |
| APS-M1E | **0302064** |
| Sensor | |
| APS-M1S | **0302062** |

- When using an APS system, for each gripper a mounting kit (AS-APS), an APS sensor (APS-M 1S, incl. 3 m cable) as well as an electronics (APS-M1e) are required.
- An extension cable (APS-K) can be connected between the sensor and the electronics as an option. The max. cable length between the sensor and the electronics is 10 m, between the electronics and their control unit (PLC) it is max. 1 m.


You can find more detailed information and individual parts of the above-mentioned accessories in the “Accessories” catalog section.

## Flexible Position Sensor

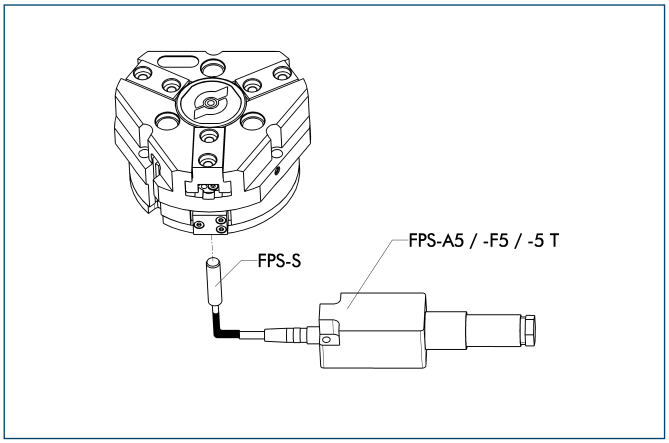


Flexible position monitoring of up to five positions

| Description | ID |
|---|---|
| Mounting kit for FPS | |
| AS-PGN/PZN-plus 160/1 | **0301638** |
| Electronic Processor | |
| FPS-F5 | **0301805** |
| FPS-F5 T | **0301807** |
| Sensor | |
| FPS-S M8 | **0301704** |

ⓘ When using a FPS system, a FPS sensor (FPS-S) and a control unit (FPS-F5 / F5 T or A5) are required for each gripper as well as a mounting kit (AS), if listed. Cable extensions (KV) are available as options in the “Accessories” catalog section.

You can find more detailed information and individual parts of the above-mentioned accessories in the “Accessories” catalog section.

# PZB-plus

**Pneumatic • 3-Finger Centric Gripper • Universal Gripper**

**Sizes**
50 ... 160

**Weight**
0.26 kg ... 7.3 kg

**Gripping force**
340 N ... 5400 N

**Stroke per finger**
2 mm ... 13 mm

**Workpiece weight**
1.25 kg ... 20 kg

## Application example

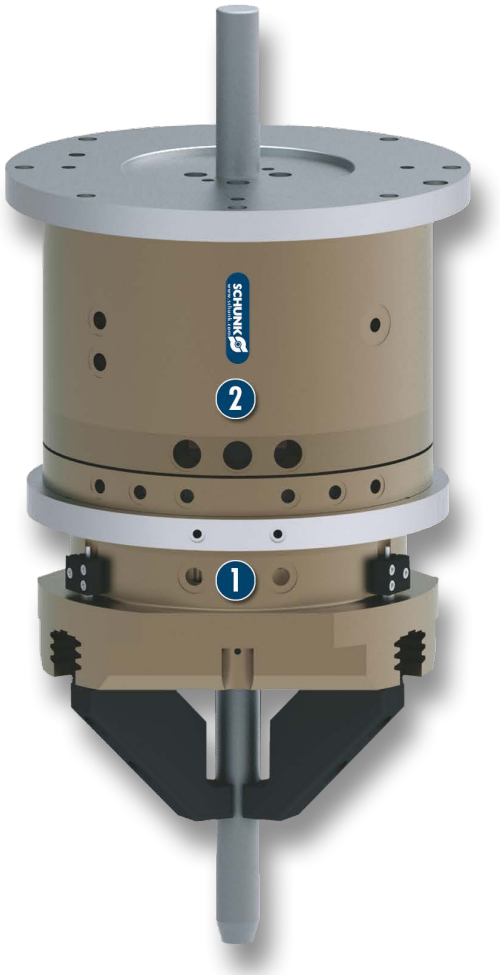


**Assembly aid for long shafts. Feeding is done space-saving via the center bores of gripper and rotary feed through.**

1. 3-Finger Centric Gripper PZB-plus
2. Modified DDF Rotary feed-through with center bore

## Universal Gripper
universal 3-Finger Concentric Gripper with large gripping force and high maximum moments per finger, plus center bore

## Field of application
For universal use in clean and slightly dirty environments. Suitable for applications that require a center bore, e.g. for workpiece feed, special sensor systems or optical recognition systems.




## Your advantages and benefits

**Robust multi-tooth guidance**
for precise handling

**High maximum moments possible**
suitable for using long gripper fingers

**High gripping forces achievable**
for a wide range of applications

**Center through-hole**
Available with fitting and female thread, which facilitates assembly of customer attachments. Moreover, the center bore is used for feed through of supply hoses and others.

**Air supply via hose-free direct connection or screw connections**
for the flexible supply of compressed air in all automation systems

**Manifold options**
optional with mechanic gripping force maintenance




## General note to the series

**Principle of function**
Wedge-hook kinematics

**Housing material**
Aluminum alloy, hard-anodized

**Base jaw material**
Steel

**Actuation**
pneumatic, with filtered compressed air (10 microns): dry, lubricated or non-lubricated
Pressure medium: Required quality class of compressed air according to DIN ISO 8573-1: 6 4 4

**Warranty**
36 months (details, general terms and conditions and operation manuals can be downloaded under www.schunk.com)

**Scope of delivery**
Brackets for proximity switches, centering sleeves, O-rings for direct connection, assembly and operating manual with manufacturer's declaration

**Gripping force maintenance device**
possible with SDV-P pressure maintenance valve

## Sectional diagram

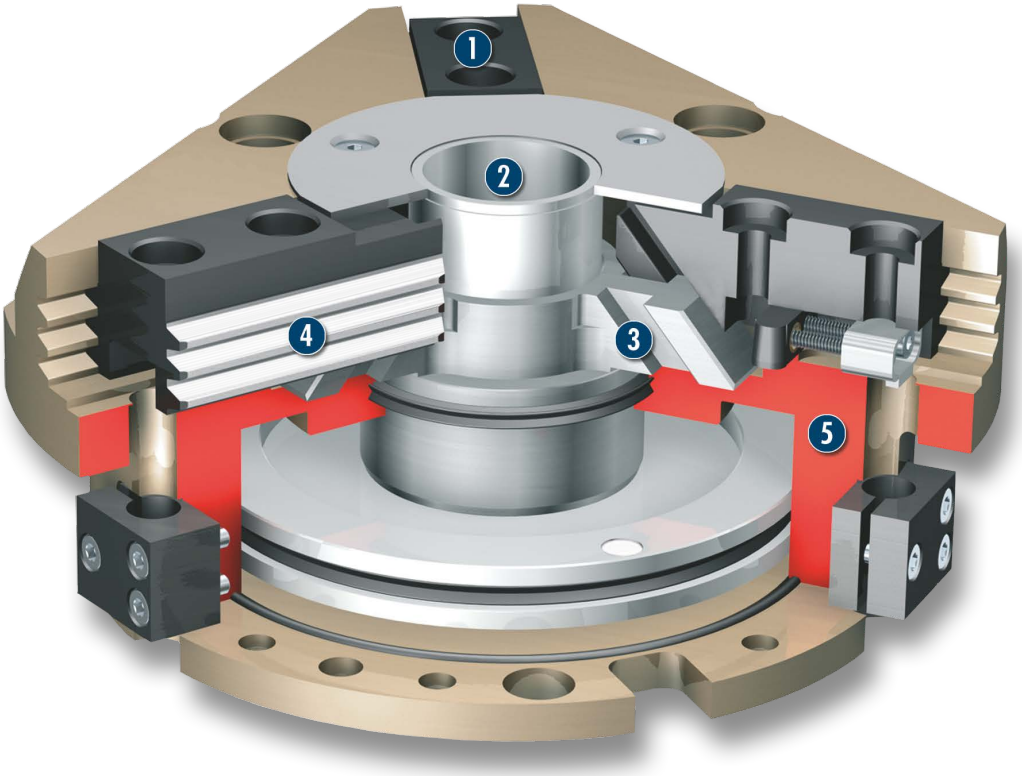


**1 Base jaw**
for the connection of workpiece-specific gripper fingers

**2 Center bore**
for workpiece feeding, for sensor systems, actuators (ejectors) or optical workpiece recognition

**3 Wedge-hook design**
for high power transmission and centric gripping

**4 Multiple-tooth guidance**
precise gripping through base jaw guidance with a high load capacity and a minimum play

**5 Housing**
weight-optimized through application of hard-anodized, high-strength aluminum alloy

## Functional description

The piston is moved up or down by compressed air. Through its angled active surfaces, the wedge hook transforms this motion into the centric, synchronous gripping motion of the three base jaws.
Through its angled active surfaces, the wedge hook transforms this movement into the lateral, synchronous gripping movement of both base jaws.

## Options and special information

Thanks to the center bore, the PZB-plus series is an ideal standard solution for many fields of application.

## Accessories

Accessories from SCHUNK – the suitable supplement for maximum functionality, reliability and performance of all automation modules.

### Sensor system



### Fittings



### Universal intermediate jaw



### Compensation unit



### Gripper pads

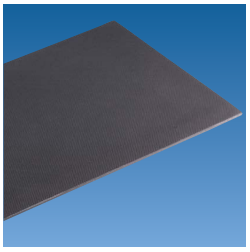

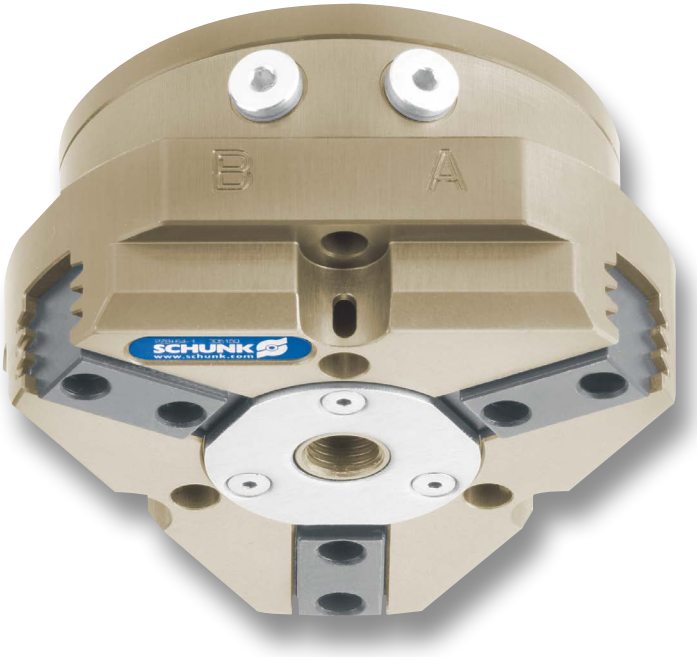

### Sensor cables



### Quick-change Jaw System



### Sensor Distributor

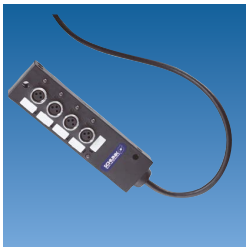

### Pressure maintenance valve



### Finger blanks



### Force measuring jaws



### Analog position sensor

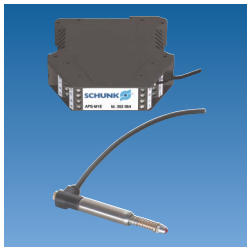

### Flexible Position Sensor

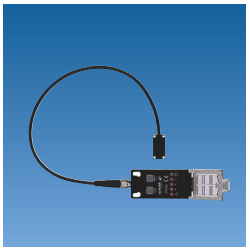

ⓘ For the exact size of the required accessories, availability of this size and the designation and ID, please refer to the additional views at the end of the size in question. You will find more detailed information on our accessory range in the “Accessories” catalog section.

## General note to the series

### Gripping force

is the arithmetic total of the gripping force applied to each finger at distance P (see illustration) measured from the upper edge of the gripper.

### Finger length

The finger length is measured from the upper edge of the gripper housing in the direction of the main axis.

### Repeat accuracy

is defined as the spread of the limit position after 100 consecutive strokes.

### Workpiece weight

The recommended workpiece weight is calculated for a force-type connection with a coefficient of friction of 0.1 and a safety factor of 2 against slippage of the workpiece on acceleration due to gravity g. Considerably heavier workpiece weights are permitted with form-fit gripping.

### Closing and opening times

Closing and opening times are purely the times that the base jaws or fingers are in motion. Valve switching times, hose filling times or PLC reaction times are not included in the above times and must be taken into consideration when determining cycle times.

# PZB-plus 50

**Pneumatic • 3-Finger Centric Gripper • Universal Gripper**



## Gripping force, I.D. gripping

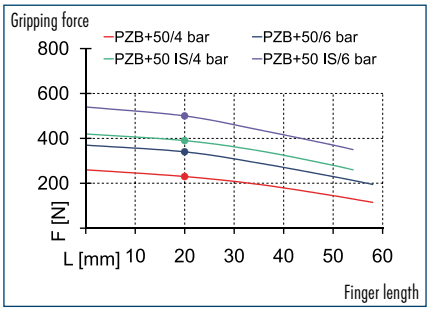


## Gripping force, O.D. gripping

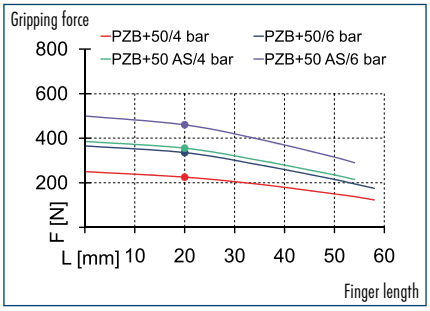


## Finger load

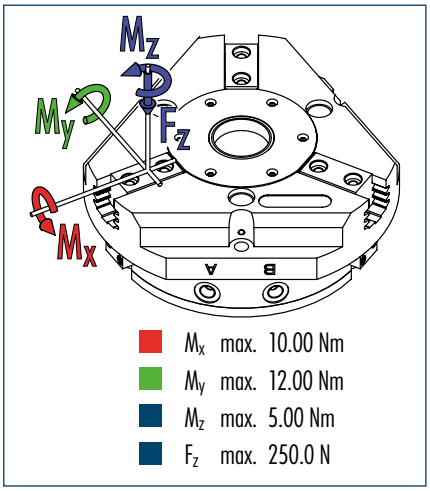


- $M_x$ max. 10.00 Nm
- $M_y$ max. 12.00 Nm
- $M_z$ max. 5.00 Nm
- $F_z$ max. 250.0 N

ⓘ The indicated moments and forces are static values, apply per base jaw and may occur simultaneously. $M_y$ may arise in addition to the moment generated by the gripping force itself. If the max. permitted finger weight is exceeded, it is imperative to throttle the air pressure so that the jaw movement occurs without any hitting or bouncing. Service life may be reduced.

## Technical data

| Description | | PZB-plus 50-1 | PZB-plus 50-1-AS | PZB-plus 50-1-IS |
|---|---|---|---|---|
| **ID** | | **0305140** | **0305142** | **0305144** |
| Stroke per finger | [mm] | 2.5 | 2.5 | 2.5 |
| Closing force | [N] | 340 | 460 | |
| Opening force | [N] | 360 | | 500 |
| Min. spring force | [N] | | 120 | 140 |
| Weight | [kg] | 0.26 | 0.36 | 0.36 |
| Recommended workpiece weight | [kg] | 1.25 | 1.25 | 1.25 |
| Air consumption per double stroke | [cm³] | 10.5 | 15 | 15 |
| Min./max. operating pressure | [bar] | 2/8 | 4/6.5 | 4/6.5 |
| Nominal operating pressure | [bar] | 6 | 6 | 6 |
| Closing/opening time | [s] | 0.03/0.03 | 0.02/0.04 | 0.04/0.02 |
| Max. permitted finger length | [mm] | 58 | 54 | 54 |
| Max. permitted weight per finger | [kg] | 0.1 | 0.1 | 0.1 |
| IP class | | 40 | 40 | 40 |
| Min./max. ambient temperature | [°C] | -10/90 | -10/90 | -10/90 |
| Repeat accuracy | [mm] | 0.01 | 0.01 | 0.01 |
| Diameter of center bore | [mm] | 6 | 6 | 6 |

## Main view

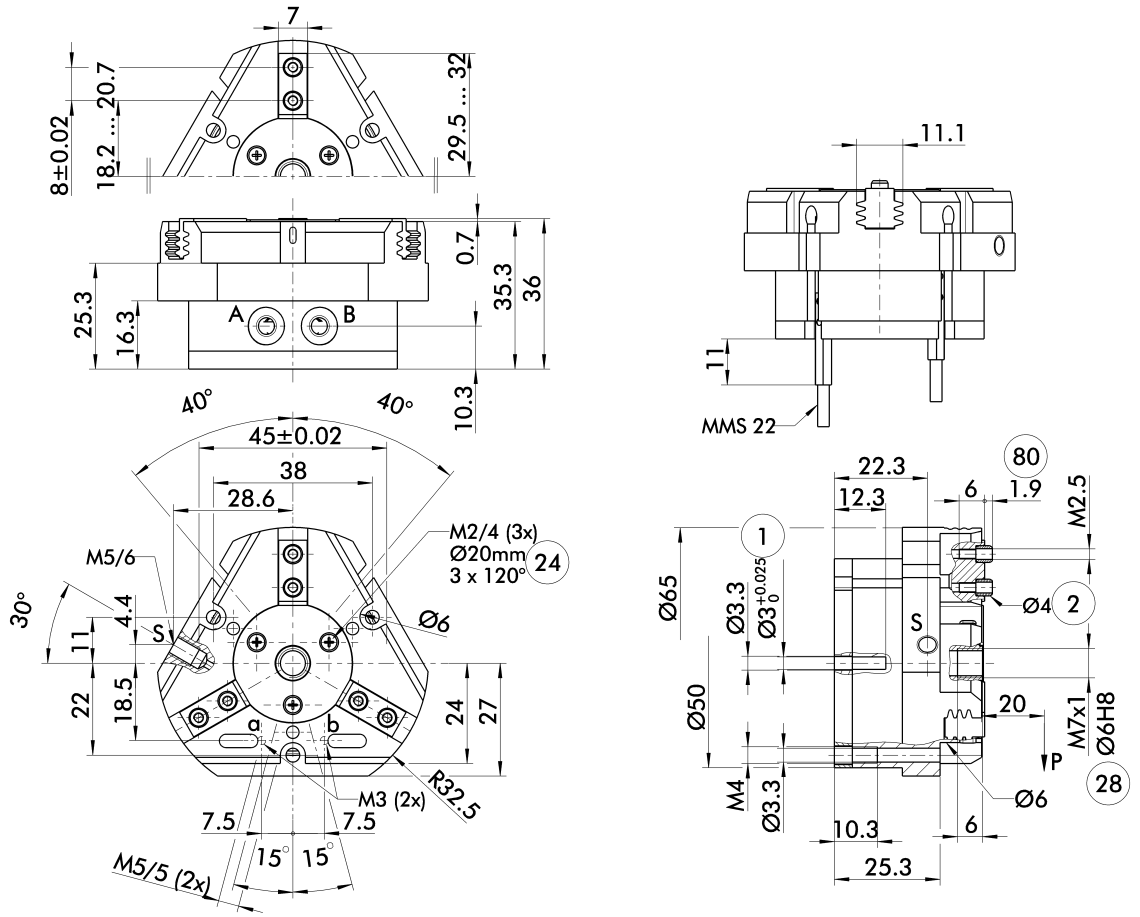


The drawing shows the gripper in the basic version with closed jaws, the dimensions do not include the options described below.

A, a Main/direct connection, gripper opening
B, b Main/direct connection, gripper closing
S Air purge connection
① Gripper connection
② Finger connection
㉔ Bolt circle
㉘ Through-bore
㉚ Depth of the centering sleeve hole in the matching part

## AS/IS gripping force maintenance device

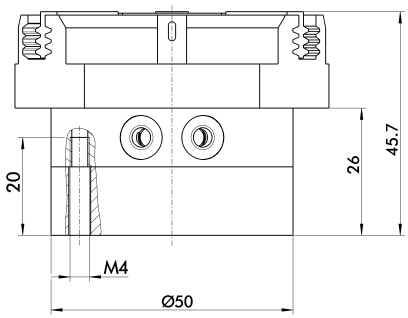


The mechanical gripping force maintenance device ensures a minimum gripping force even in case of pressure drop. This acts as closing force in the AS version, and as opening force in the IS version. In addition, the gripping force maintenance device can also be used for increasing the gripping force or for single-acting gripping.

## Spring-loaded pressure piece

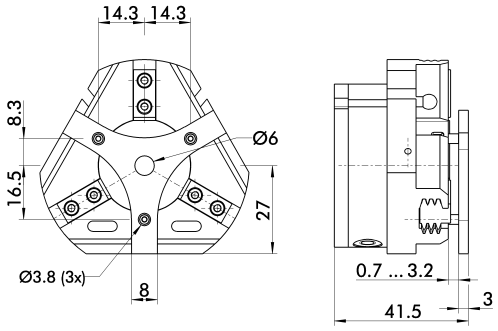


For spring-supported positioning of the workpiece against a stop after the gripper has opened. Especially developed for loading machines.

| Description | ID | Stroke | Min. force |
|---|---|---|---|
| Spring-loaded pressure piece | | | |
| A-PZB-plus 50 | **0305146** | 2.5 mm | 5 N |

You can find more detailed information and individual parts of the above-mentioned accessories in the “Accessories” catalog section.

## Universal intermediate jaw

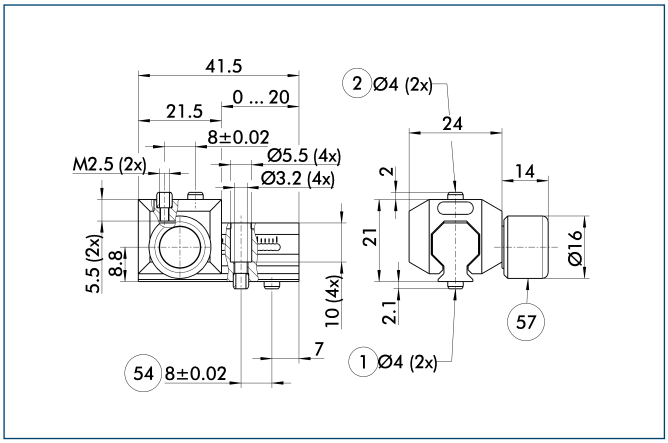


① Gripper connection
② Finger connection
54 Optional right or left connection
57 Locking

The universal intermediate jaw allows fast tool-free and reliable plugging and shifting of top jaws at the gripper.

| Description | ID | Grid dimension |
|---|---|---|
| Universal intermediate jaw | | |
| UZB 40 | **0300040** | 1 mm |

## Finger blanks

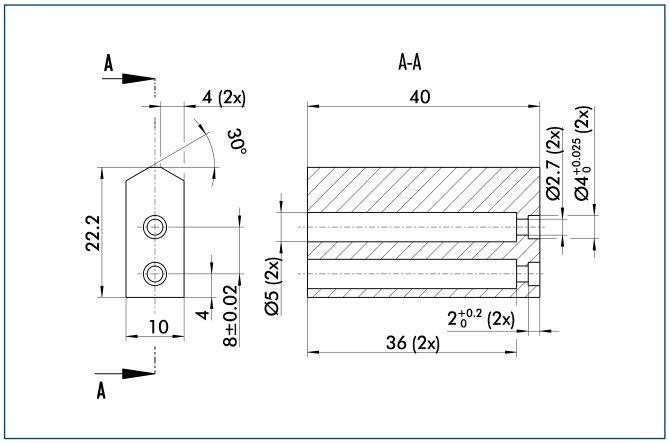


Finger blanks for customized subsequent machining

| Description | ID | Material | Scope of delivery |
|---|---|---|---|
| Finger blanks | | | |
| ABR-plus 40 | **0300008** | Aluminum | 1 |
| SBR-plus 40 | **0300018** | 16 MnCr 5 | 1 |

## Tolerance compensation unit

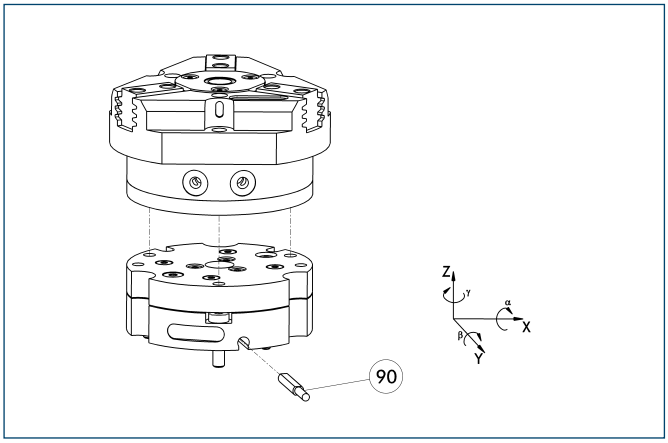


90 Monitoring of locking

Grippers can be directly mounted without an adapter plate. Tolerance compensation unit and gripper have an identical screw connection diagram. Therefore the tolerance compensation units can be assembled later. Please consider the additional assembly height of the tolerance compensation unit. For details see catalog “Robot Accessories”.

| Description | ID | Locking | Deflection |
|---|---|---|---|
| Compensation unit | | | |
| TCU-050-3-OV-Z | **0324749** | No | |

## Compensation unit with spring reset

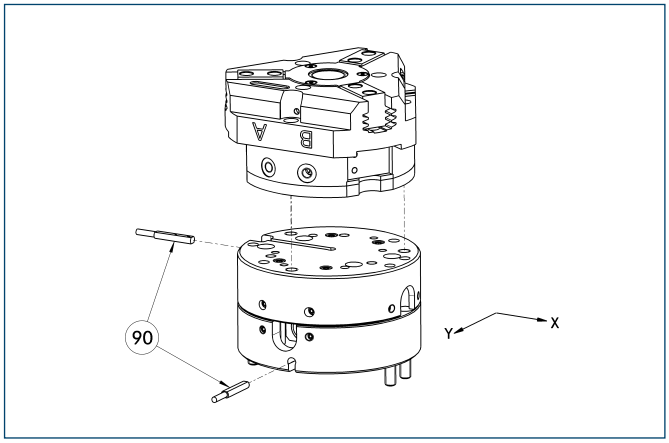


90 Monitoring

Grippers can be directly mounted without using an adapter plate. For details see our catalog “Robot Accessories”.

| Description | ID | Compensation travel | Reset force |
|---|---|---|---|
| Compensation unit | | | |
| AGE-F-XY-040-1 | **0324920** | ±2 mm | 1 N |
| AGE-F-XY-040-2 | **0324921** | ±2 mm | 2.5 N |
| AGE-F-XY-040-3 | **0324922** | ±2 mm | 3.3 N |

You can find more detailed information and individual parts of the above-mentioned accessories in the “Accessories” catalog section.

## Programmable magnetic switch

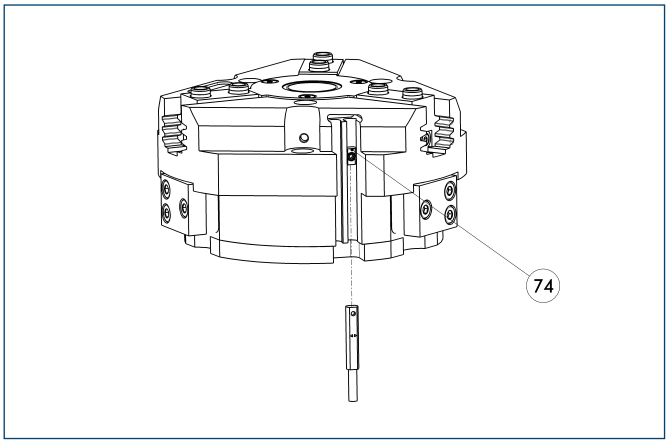


74 Stop for MMS-P

Position monitoring with two programmable positions per sensor. The end position monitoring is mounted in the C-slot.

| Description | ID | Recommended product |
|---|---|---|
| Programmable magnetic switch | | |
| MMS-P 22-S-M8-PNP | **0301370** | • |
| MMSK-P 22-S-PNP | **0301371** | |
| Connection cables | | |
| KA BG08-L 4P-0500 | **0307767** | |
| KA BG08-L 4P-1000 | **0307768** | |
| KA BW08-L 4P-0500 | **0307765** | |
| KA BW08-L 4P-1000 | **0307766** | |
| Sensor Distributor | | |
| V2-M8-4P-2XM8-3P | **0301380** | |

ⓘ Please note the minimum permitted bending radii for the sensor cables, which are generally 35 mm.
ⓘ Per gripper one sensor (closer/NO) is required, optionally a cable extension.

## Electronic magnetic switches

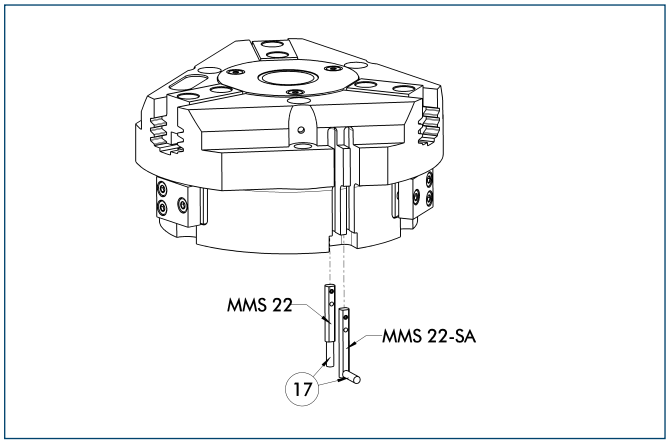


17 Cable outlet

End position monitoring for mounting in the C-slot

| Description | ID | Recommended product |
|---|---|---|
| Electronic magnetic switches | | |
| MMS 22-S-M5-PNP | **0301438** | |
| MMS 22-S-M5-NPN | **0301439** | |
| MMS 22-S-M8-PNP | **0301432** | • |
| MMS 22-S-M8-NPN | **0301433** | |
| MMSK 22-S-PNP | **0301434** | |
| MMSK 22-S-NPN | **0301435** | |
| Electronic magnetic switches with lateral cable outlet | | |
| MMS 22-S-M5-PNP-SA | **0301448** | |
| MMS 22-S-M5-NPN-SA | **0301449** | |
| MMS 22-S-M8-PNP-SA | **0301442** | • |
| MMS 22-S-M8-NPN-SA | **0301443** | |
| MMSK 22-S-PNP-SA | **0301444** | |
| MMSK 22-S-NPN-SA | **0301445** | |
| Connection cables | | |
| KA BG05-L 3P-0300 | **0301652** | |
| KA BG08-L 3P-0300-PNP | **0301622** | |
| KA BG08-L 3P-0500-PNP | **0301623** | |
| KA BW05-L 3P-0300 | **0301650** | |
| KA BW08-L 3P-0300-NPN | **0301602** | |
| KA BW08-L 3P-0300-PNP | **0301594** | |
| KA BW08-L 3P-0500-NPN | **9641116** | |
| KA BW08-L 3P-0500-PNP | **0301502** | |
| Cable extensions | | |
| KV BW08-SG08 3P-0030-PNP | **0301495** | |
| KV BW08-SG08 3P-0100-PNP | **0301496** | |
| KV BW08-SG08 3P-0200-PNP | **0301497** | |

ⓘ Please note the minimum permitted bending radii for the sensor cables, which are generally 35 mm.

You can find more detailed information and individual parts of the above-mentioned accessories in the “Accessories” catalog section.

# PZB-plus 64

**Pneumatic • 3-Finger Centric Gripper • Universal Gripper**

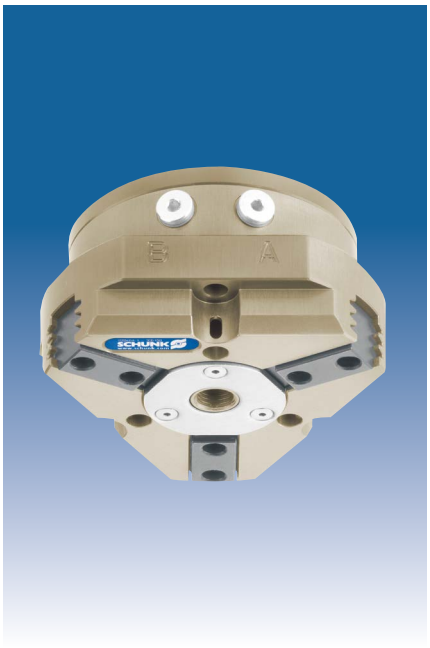

## Gripping force, I.D. gripping

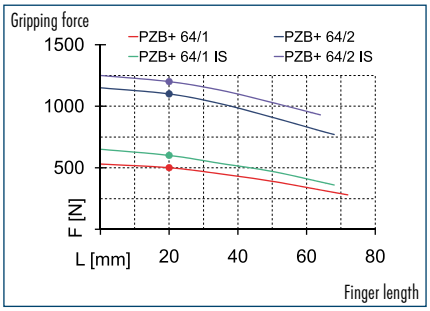


## Gripping force, O.D. gripping

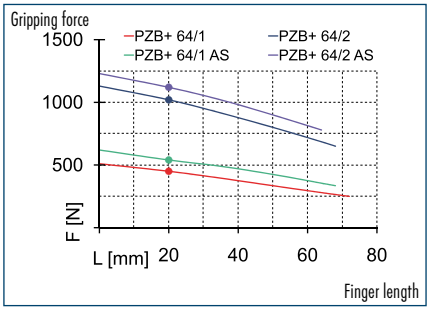


## Finger load

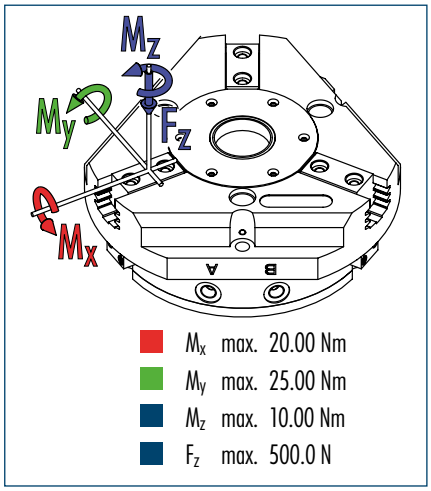


ⓘ The indicated moments and forces are static values, apply per base jaw and may occur simultaneously. $M_y$ may arise in addition to the moment generated by the gripping force itself. If the max. permitted finger weight is exceeded, it is imperative to throttle the air pressure so that the jaw movement occurs without any hitting or bouncing. Service life may be reduced.

## Technical data

| Description | | PZB-plus 64-1 | PZB-plus 64-2 | PZB-plus 64-1-AS | PZB-plus 64-2-AS | PZB-plus 64-1-IS | PZB-plus 64-2-IS |
|---|---|---|---|---|---|---|---|
| **ID** | | **0305150** | **0305151** | **0305152** | **0305153** | **0305154** | **0305155** |
| Stroke per finger | [mm] | 4 | 2 | 4 | 2 | 4 | 2 |
| Closing force | [N] | 450 | 1000 | 540 | 1180 | | |
| Opening force | [N] | 500 | 1100 | | | 600 | 1300 |
| Min. spring force | [N] | | | 90 | 180 | 100 | 200 |
| Weight | [kg] | 0.51 | 0.51 | 0.63 | 0.63 | 0.63 | 0.63 |
| Recommended workpiece weight | [kg] | 1.6 | 3.4 | 1.6 | 3.4 | 1.6 | 3.4 |
| Air consumption per double stroke | [cm³] | 19.5 | 19.5 | 35 | 35 | 35 | 35 |
| Min./max. operating pressure | [bar] | 2/8 | 2/8 | 4/6.5 | 4/6.5 | 4/6.5 | 4/6.5 |
| Nominal operating pressure | [bar] | 6 | 6 | 6 | 6 | 6 | 6 |
| Closing/opening time | [s] | 0.03/0.03 | 0.03/0.03 | 0.02/0.04 | 0.02/0.04 | 0.04/0.02 | 0.04/0.02 |
| Max. permitted finger length | [mm] | 72 | 68 | 68 | 64 | 68 | 64 |
| Max. permitted weight per finger | [kg] | 0.18 | 0.18 | 0.18 | 0.18 | 0.18 | 0.18 |
| IP class | | 40 | 40 | 40 | 40 | 40 | 40 |
| Min./max. ambient temperature | [°C] | -10/90 | -10/90 | -10/90 | -10/90 | -10/90 | -10/90 |
| Repeat accuracy | [mm] | 0.01 | 0.01 | 0.01 | 0.01 | 0.01 | 0.01 |
| Diameter of center bore | [mm] | 8 | 8 | 8 | 8 | 8 | 8 |

## Main view

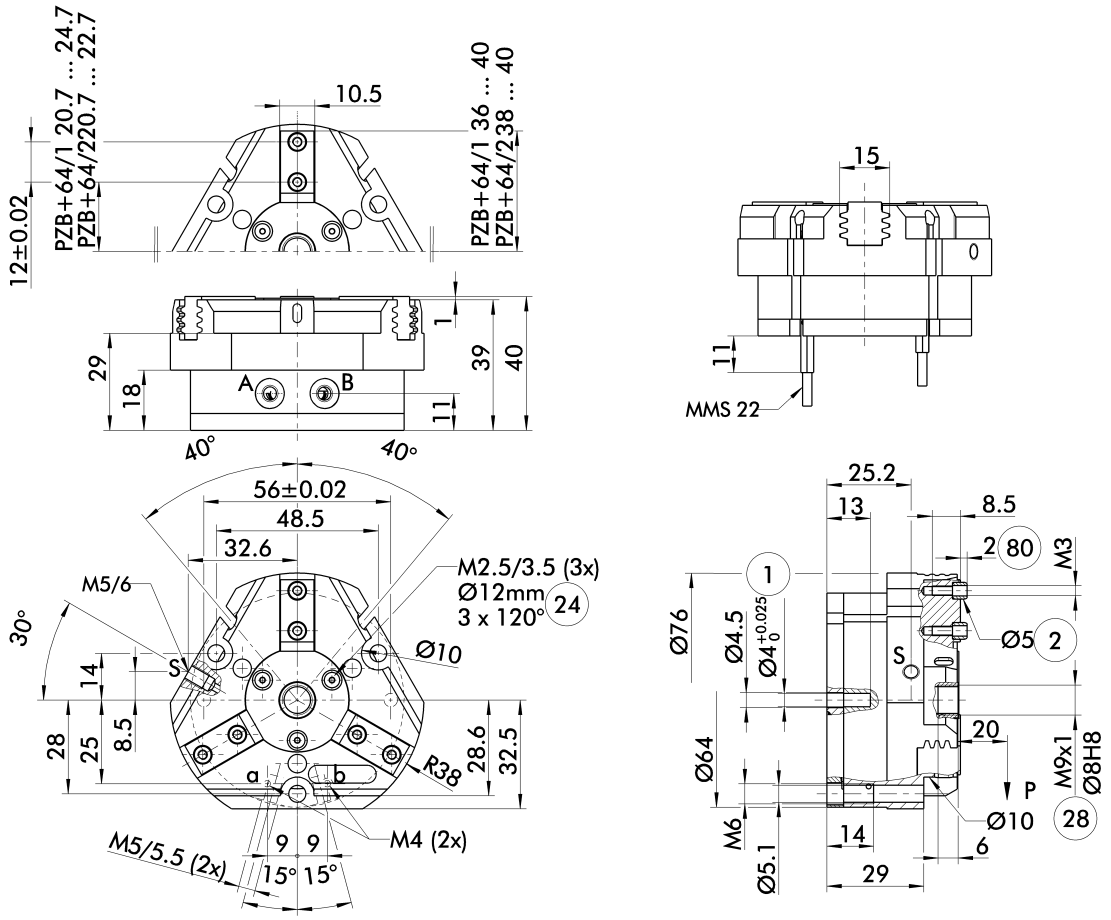


The drawing shows the gripper in the basic version with closed jaws, the dimensions do not include the options described below.

A, a Main/direct connection, gripper opening
B, b Main/direct connection, gripper closing
S Air purge connection
(1) Gripper connection
(2) Finger connection
(24) Bolt circle
(28) Through-bore
(80) Depth of the centering sleeve hole in the matching part

## AS/IS gripping force maintenance device

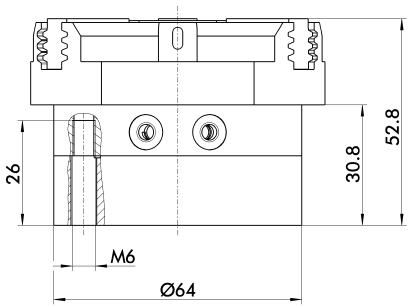


The mechanical gripping force maintenance device ensures a minimum gripping force even in case of pressure drop. This acts as closing force in the AS version, and as opening force in the IS version. In addition, the gripping force maintenance device can also be used for increasing the gripping force or for single-acting gripping.

## Spring-loaded pressure piece

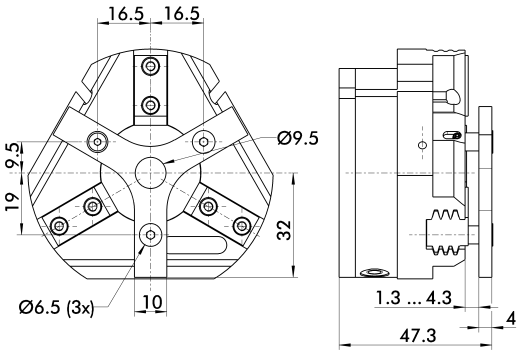


For spring-supported positioning of the workpiece against a stop after the gripper has opened. Especially developed for loading machines.

| Description | ID | Stroke | Min. force |
|---|---|---|---|
| Spring-loaded pressure piece | | | |
| A-PZB-plus 64 | **0305156** | 3 mm | 12 N |

You can find more detailed information and individual parts of the above-mentioned accessories in the “Accessories” catalog section.

## Quick-change Jaw System

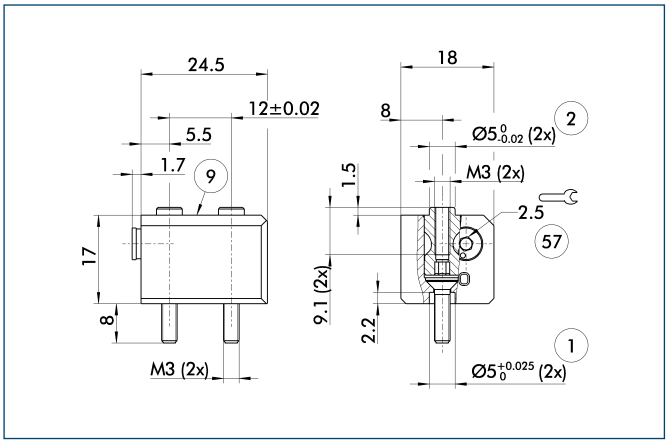


① Gripper connection
② Finger connection
⑨ For mounting screw connection diagram, see basic version
⑤⑦ Locking

The BSWS quick-change jaw system enables top jaws to be changed on the gripper manually and rapidly. An adapter (BSWS-A) and a base (BSWS-B) are required for each gripper jaw.
For a reverse assembly without height set-up, one adapter (BSWS-A) and a kit (BSWS-U) per gripper jaw are required. Another effect of the BSWS-U is, that there are no disturbing fastening bores in the finger contour.

| Description | ID |
|---|---|
| Quick-change Jaw System adapter | |
| BSWS-A 50 | **0303020** |
| Quick-change Jaw System base | |
| BSWS-B 50 | **0303021** |
| Quick-change Jaw System reversed | |
| BSWS-U 50 | **0303040** |

## Universal intermediate jaw

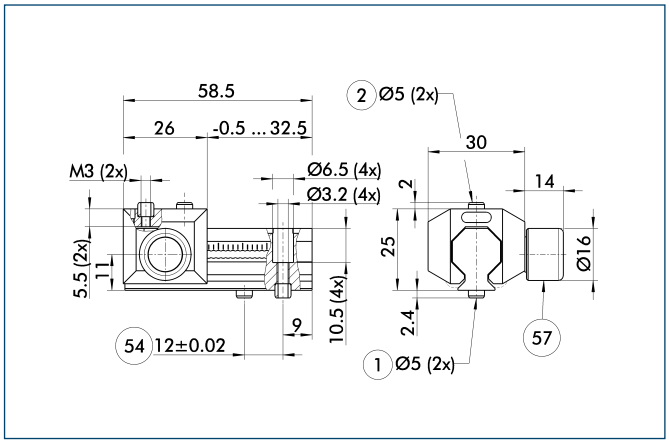


① Gripper connection
② Finger connection
⑤④ Optional right or left connection
⑤⑦ Locking

The universal intermediate jaw allows fast tool-free and reliable plugging and shifting of top jaws at the gripper.

| Description | ID | Grid dimension |
|---|---|---|
| Universal intermediate jaw | | |
| UZB 50 | **0300041** | 1.5 mm |

ⓘ The slide UZB-S can be removed completely and has to be ordered separately. Moreover, it allows a fast jaw change.

You can find more detailed information and individual parts of the above-mentioned accessories in the “Accessories” catalog section.

## Force measuring jaws

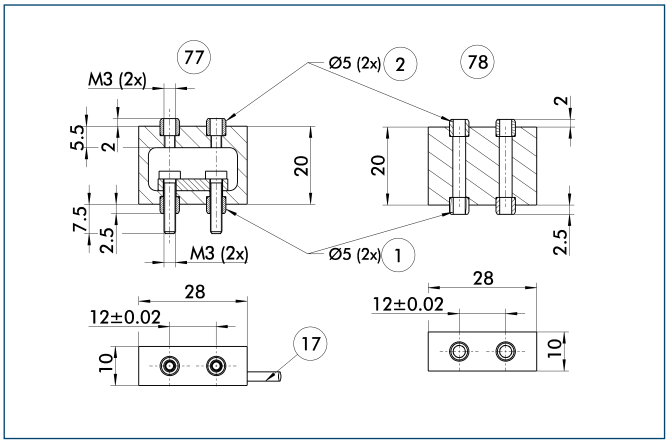


① Gripper connection
② Finger connection
⑰ Cable outlet
⑦⑦ Active intermediate jaws
⑦⑧ Passive intermediate jaws

Force measuring jaws measure gripping forces, but can also determine workpiece weights or dimensional deviations. There are active and passive intermediate jaws (FMS-ZBA or FMS-ZBP). At least one active force measuring jaw is required per gripper, the rest can be passive. For each active jaw, a FMS-A1 control unit and a FMS-A connection cable are required.

| Description | ID |
|---|---|
| Active intermediate jaws | |
| FMS-ZBA 50 | **0301830** |
| Passive intermediate jaws | |
| FMS-ZBP 50 | **0301831** |
| Electronic Processor | |
| FMS-A1 | **0301810** |
| Connection cables | |
| FMS-AK0200 | **0301820** |
| FMS-AK0500 | **0301821** |
| FMS-AK1000 | **0301822** |
| FMS-AK2000 | **0301823** |

## Finger blanks

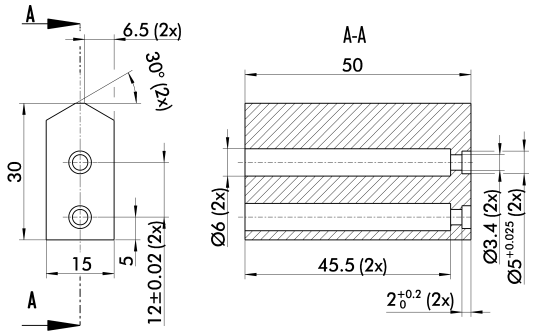


Finger blanks for customized subsequent machining

| Description | ID | Material | Scope of delivery |
|---|---|---|---|
| Finger blanks | | | |
| ABR-plus 50 | **0300009** | Aluminum | 1 |
| SBR-plus 50 | **0300019** | 16 MnCr 5 | 1 |

You can find more detailed information and individual parts of the above-mentioned accessories in the “Accessories” catalog section.

## Tolerance compensation unit

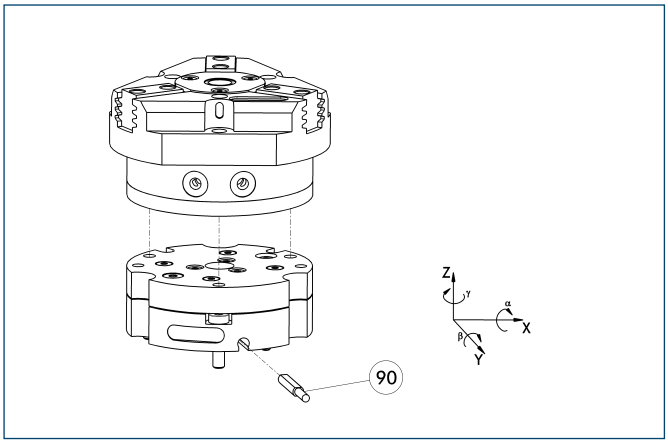


(90) Monitoring of locking

Grippers can be directly mounted without an adapter plate. Tolerance compensation unit and gripper have an identical screw connection diagram. Therefore the tolerance compensation units can be assembled later. Please consider the additional assembly height of the tolerance compensation unit. For details see catalog “Robot Accessories”.

| Description | ID | Locking | Deflection |
|---|---|---|---|
| Compensation unit | | | |
| TCU-064-3-MV-Z | **0324766** | Yes | |
| TCU-064-3-OV-Z | **0324767** | No | |

## Programmable magnetic switch

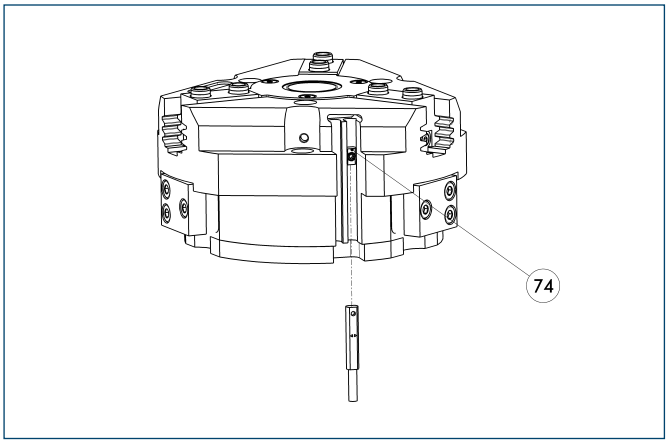


(74) Stop for MMS-P

Position monitoring with two programmable positions per sensor. The end position monitoring is mounted in the C-slot.

| Description | ID | Recommended product |
|---|---|---|
| Programmable magnetic switch | | |
| MMS-P 22-S-M8-PNP | **0301370** | • |
| MMSK-P 22-S-PNP | **0301371** | |
| Connection cables | | |
| KA BG08-L 4P-0500 | **0307767** | |
| KA BG08-L 4P-1000 | **0307768** | |
| KA BW08-L 4P-0500 | **0307765** | |
| KA BW08-L 4P-1000 | **0307766** | |
| Sensor Distributor | | |
| V2-M8-4P-2XM8-3P | **0301380** | |

ⓘ Please note the minimum permitted bending radii for the sensor cables, which are generally 35 mm.

ⓘ Per gripper one sensor (closer/NO) is required, optionally a cable extension.

## Compensation unit with spring reset

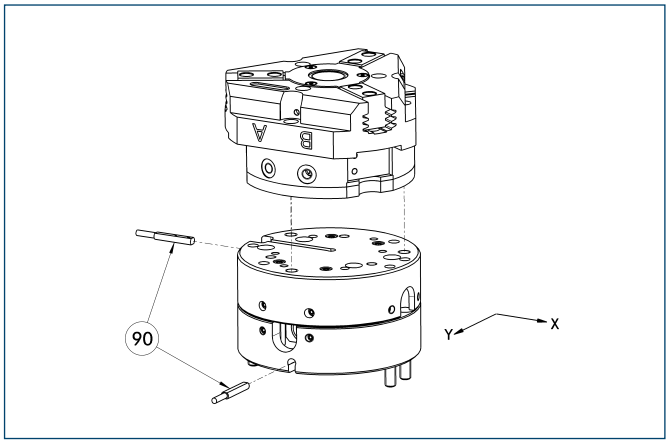


(90) Monitoring

Grippers can be directly mounted without using an adapter plate. For details see our catalog “Robot Accessories”.

| Description | ID | Compensation travel | Reset force |
|---|---|---|---|
| Compensation unit | | | |
| AGE-F-XY-063-1 | **0324940** | ±4 mm | 9 N |
| AGE-F-XY-063-2 | **0324941** | ±4 mm | 10 N |
| AGE-F-XY-063-3 | **0324942** | ±4 mm | 19.3 N |

## Electronic magnetic switches

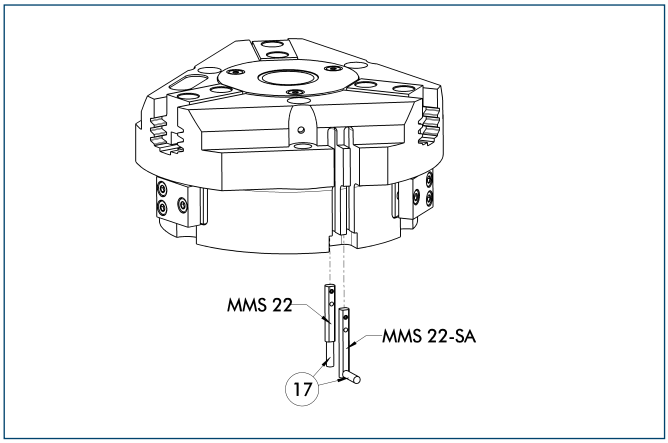


⑰ Cable outlet

End position monitoring for mounting in the C-slot

| Description | ID | Recommended product |
|---|---|---|
| Electronic magnetic switches | | |
| MMS 22-S-M5-PNP | **0301438** | |
| MMS 22-S-M5-NPN | **0301439** | |
| MMS 22-S-M8-PNP | **0301432** | • |
| MMS 22-S-M8-NPN | **0301433** | |
| MMSK 22-S-PNP | **0301434** | |
| MMSK 22-S-NPN | **0301435** | |
| Electronic magnetic switches with lateral cable outlet | | |
| MMS 22-S-M5-PNP-SA | **0301448** | |
| MMS 22-S-M5-NPN-SA | **0301449** | |
| MMS 22-S-M8-PNP-SA | **0301442** | • |
| MMS 22-S-M8-NPN-SA | **0301443** | |
| MMSK 22-S-PNP-SA | **0301444** | |
| MMSK 22-S-NPN-SA | **0301445** | |
| Connection cables | | |
| KA BG05-L 3P-0300 | **0301652** | |
| KA BG08-L 3P-0300-PNP | **0301622** | |
| KA BG08-L 3P-0500-PNP | **0301623** | |
| KA BW05-L 3P-0300 | **0301650** | |
| KA BW08-L 3P-0300-NPN | **0301602** | |
| KA BW08-L 3P-0300-PNP | **0301594** | |
| KA BW08-L 3P-0500-NPN | **9641116** | |
| KA BW08-L 3P-0500-PNP | **0301502** | |
| Cable extensions | | |
| KV BW08-SG08 3P-0030-PNP | **0301495** | |
| KV BW08-SG08 3P-0100-PNP | **0301496** | |
| KV BW08-SG08 3P-0200-PNP | **0301497** | |

ⓘ Please note the minimum permitted bending radii for the sensor cables, which are generally 35 mm.

You can find more detailed information and individual parts of the above-mentioned accessories in the “Accessories” catalog section.

# PZB-plus 80

**Pneumatic • 3-Finger Centric Gripper • Universal Gripper**

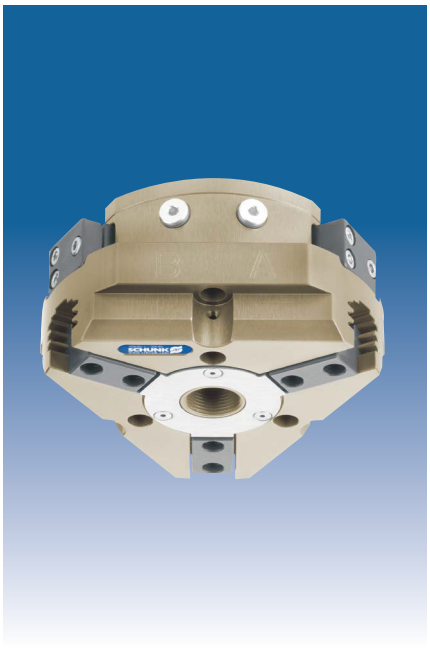

## Gripping force, I.D. gripping

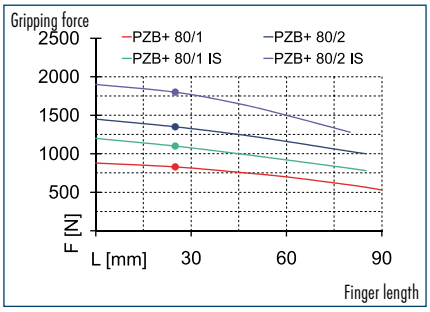


## Gripping force, O.D. gripping

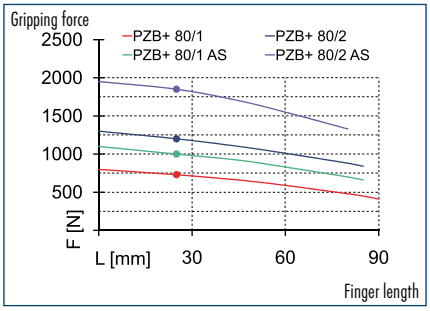


## Finger load

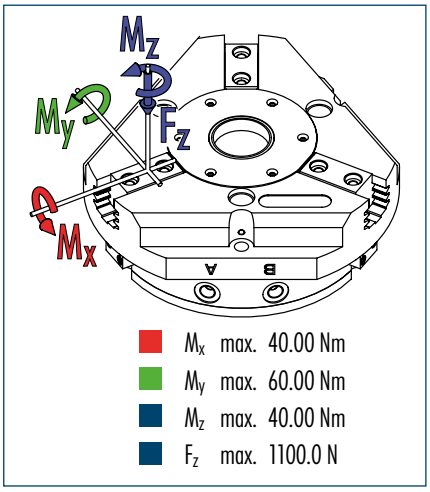


ⓘ The indicated moments and forces are static values, apply per base jaw and may occur simultaneously. $M_y$ may arise in addition to the moment generated by the gripping force itself. If the max. permitted finger weight is exceeded, it is imperative to throttle the air pressure so that the jaw movement occurs without any hitting or bouncing. Service life may be reduced.

## Technical data

| Description | | PZB-plus 80-1 | PZB-plus 80-2 | PZB-plus 80-1-AS | PZB-plus 80-2-AS | PZB-plus 80-1-IS | PZB-plus 80-2-IS |
|---|---|---|---|---|---|---|---|
| **ID** | | **0305160** | **0305161** | **0305162** | **0305163** | **0305164** | **0305165** |
| Stroke per finger | [mm] | 6 | 3 | 6 | 3 | 6 | 3 |
| Closing force | [N] | 730 | 1200 | 950 | 1810 | | |
| Opening force | [N] | 830 | 1350 | | | 1030 | 1750 |
| Min. spring force | [N] | | | 220 | 360 | 200 | 400 |
| Weight | [kg] | 0.8 | 0.8 | 1.1 | 1.1 | 1.1 | 1.1 |
| Recommended workpiece weight | [kg] | 2.9 | 4.85 | 2.9 | 4.85 | 2.9 | 4.85 |
| Air consumption per double stroke | [cm³] | 42 | 42 | 75 | 75 | 75 | 75 |
| Min./max. operating pressure | [bar] | 2/8 | 2/8 | 4/6.5 | 4/6.5 | 4/6.5 | 4/6.5 |
| Nominal operating pressure | [bar] | 6 | 6 | 6 | 6 | 6 | 6 |
| Closing/opening time | [s] | 0.05/0.05 | 0.05/0.05 | 0.03/0.05 | 0.03/0.05 | 0.06/0.04 | 0.06/0.04 |
| Max. permitted finger length | [mm] | 90 | 85 | 85 | 80 | 85 | 80 |
| Max. permitted weight per finger | [kg] | 0.35 | 0.35 | 0.35 | 0.35 | 0.35 | 0.35 |
| IP class | | 40 | 40 | 40 | 40 | 40 | 40 |
| Min./max. ambient temperature | [°C] | -10/90 | -10/90 | -10/90 | -10/90 | -10/90 | -10/90 |
| Repeat accuracy | [mm] | 0.01 | 0.01 | 0.01 | 0.01 | 0.01 | 0.01 |
| Diameter of center bore | [mm] | 15 | 15 | 15 | 15 | 15 | 15 |

## Main view

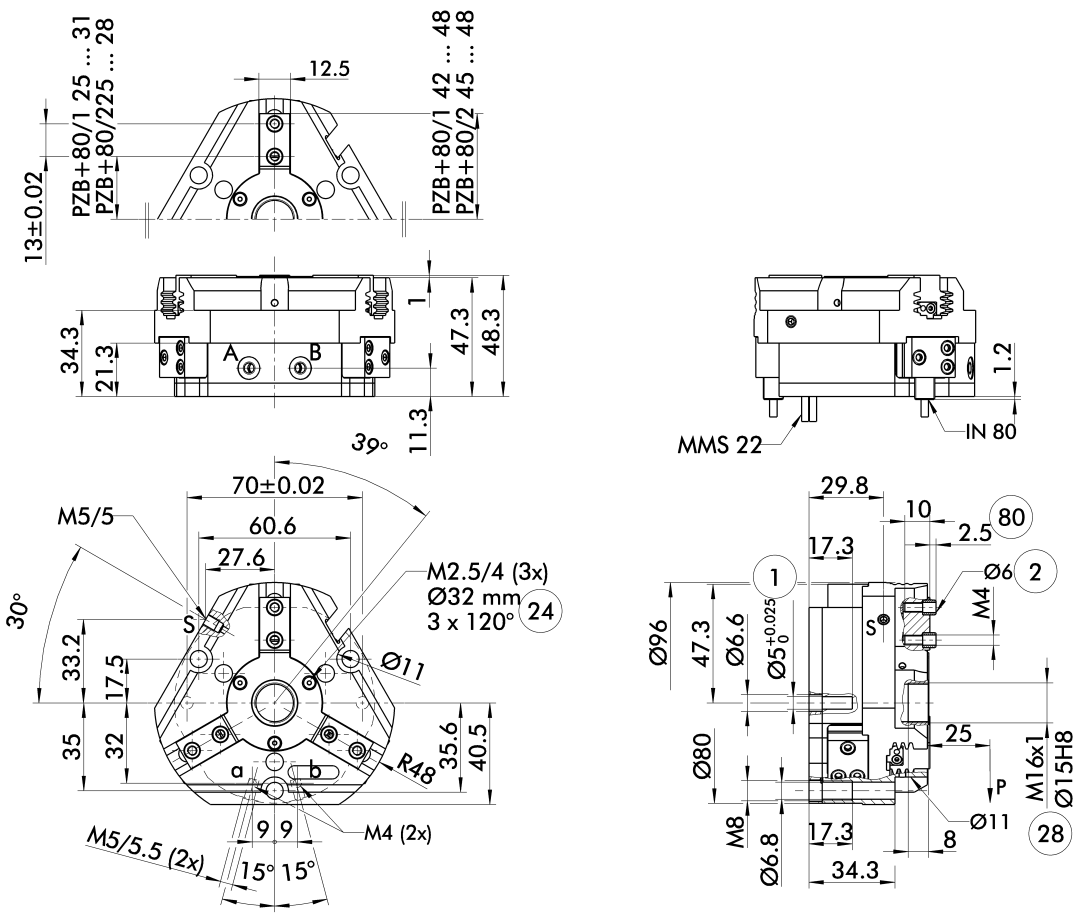


The drawing shows the gripper in the basic version with closed jaws, the dimensions do not include the options described below.

A, a Main/direct connection, gripper opening
B, b Main/direct connection, gripper closing
S Air purge connection
(1) Gripper connection
(2) Finger connection
(24) Bolt circle
(28) Through-bore
(80) Depth of the centering sleeve hole in the matching part

## AS/IS gripping force maintenance device

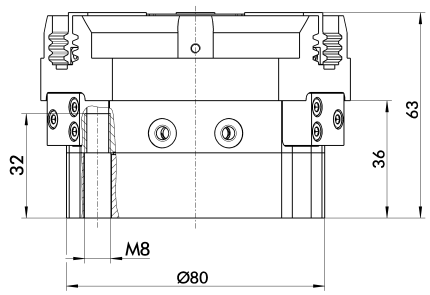


The mechanical gripping force maintenance device ensures a minimum gripping force even in case of pressure drop. This acts as closing force in the AS version, and as opening force in the IS version. In addition, the gripping force maintenance device can also be used for increasing the gripping force or for single-acting gripping.

## Spring-loaded pressure piece

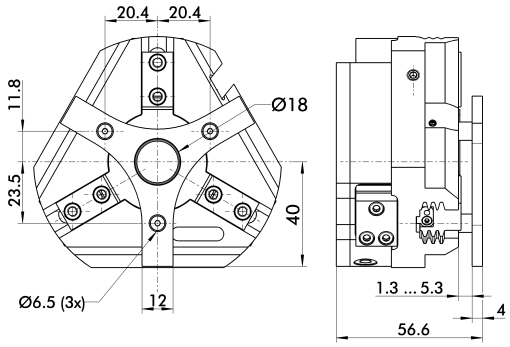


For spring-supported positioning of the workpiece against a stop after the gripper has opened. Especially developed for loading machines.

| Description | ID | Stroke | Min. force |
|---|---|---|---|
| Spring-loaded pressure piece | | | |
| A-PZB-plus 80 | **0305166** | 4 mm | 11 N |

You can find more detailed information and individual parts of the above-mentioned accessories in the “Accessories” catalog section.

## Quick-change Jaw System

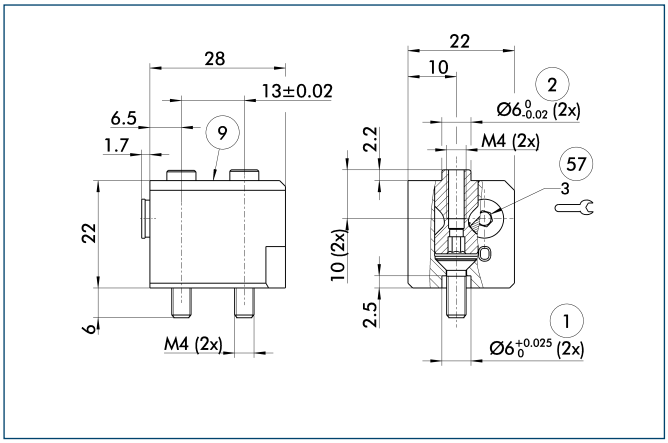


① Gripper connection
② Finger connection
⑨ For mounting screw connection diagram, see basic version
㊲ Locking

The BSWS quick-change jaw system enables top jaws to be changed on the gripper manually and rapidly. An adapter (BSWS-A) and a base (BSWS-B) are required for each gripper jaw.
For a reverse assembly without height set-up, one adapter (BSWS-A) and a kit (BSWS-U) per gripper jaw are required. Another effect of the BSWS-U is, that there are no disturbing fastening bores in the finger contour.

| Description | ID |
|---|---|
| Quick-change Jaw System adapter | |
| BSWS-A 64 | **0303022** |
| Quick-change Jaw System base | |
| BSWS-B 64 | **0303023** |
| Quick-change Jaw System reversed | |
| BSWS-U 64 | **0303041** |

## Universal intermediate jaw

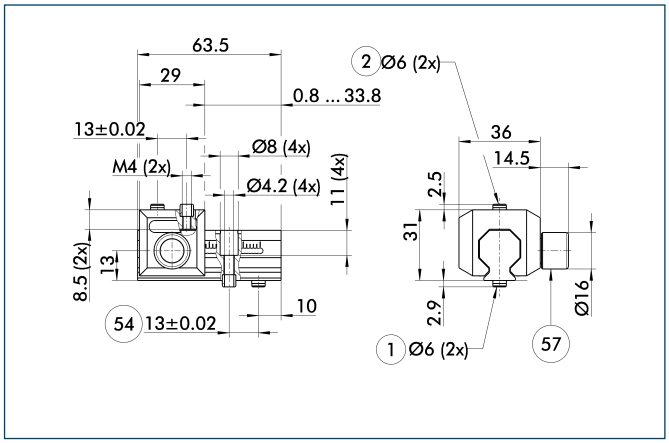


① Gripper connection
② Finger connection
㊴ Optional right or left connection
㊲ Locking

The universal intermediate jaw allows fast tool-free and reliable plugging and shifting of top jaws at the gripper.

| Description | ID | Grid dimension |
|---|---|---|
| Universal intermediate jaw | | |
| UZB 64 | **0300042** | 1.5 mm |

ⓘ The slide UZB-S can be removed completely and has to be ordered separately. Moreover, it allows a fast jaw change.

You can find more detailed information and individual parts of the above-mentioned accessories in the “Accessories” catalog section.

## Force measuring jaws

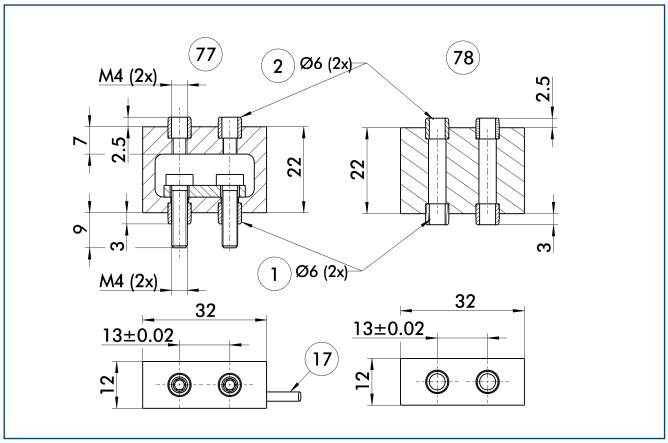


① Gripper connection
② Finger connection
⑰ Cable outlet
⑦⑦ Active intermediate jaws
⑦⑧ Passive intermediate jaws

Force measuring jaws measure gripping forces, but can also determine workpiece weights or dimensional deviations. There are active and passive intermediate jaws (FMS-ZBA or FMS-ZBP). At least one active force measuring jaw is required per gripper, the rest can be passive. For each active jaw, a FMS-A1 control unit and a FMS-A connection cable are required.

| Description | ID |
|---|---|
| Active intermediate jaws | |
| FMS-ZBA 64 | **0301832** |
| Passive intermediate jaws | |
| FMS-ZBP 64 | **0301833** |
| Electronic Processor | |
| FMS-A1 | **0301810** |
| Connection cables | |
| FMS-AK0200 | **0301820** |
| FMS-AK0500 | **0301821** |
| FMS-AK1000 | **0301822** |
| FMS-AK2000 | **0301823** |

## Finger blanks

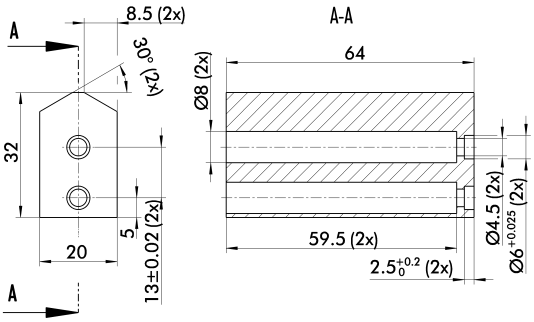


Finger blanks for customized subsequent machining

| Description | ID | Material | Scope of delivery |
|---|---|---|---|
| Finger blanks | | | |
| ABR-plus 64 | **0300010** | Aluminum | 1 |
| SBR-plus 64 | **0300020** | 16 MnCr 5 | 1 |

You can find more detailed information and individual parts of the above-mentioned accessories in the “Accessories” catalog section.

## Tolerance compensation unit

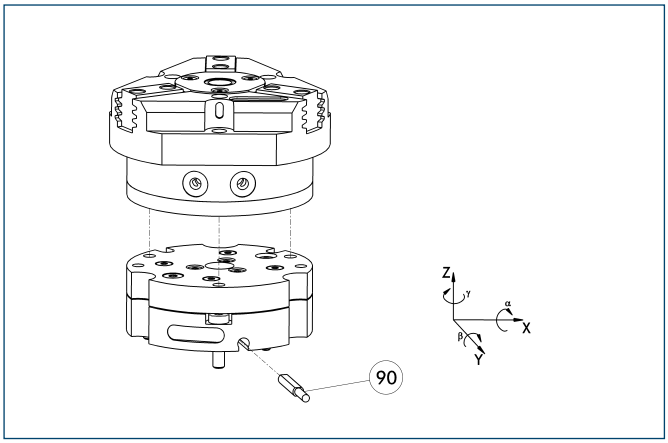


(90) Monitoring of locking

Grippers can be directly mounted without an adapter plate. Tolerance compensation unit and gripper have an identical screw connection diagram. Therefore the tolerance compensation units can be assembled later. Please consider the additional assembly height of the tolerance compensation unit. For details see catalog “Robot Accessories”.

| Description | ID | Locking | Deflection |
|---|---|---|---|
| Compensation unit | | | |
| TCU-080-3-MV-Z | **0324784** | Yes | |
| TCU-080-3-OV-Z | **0324785** | No | |

## Programmable magnetic switch

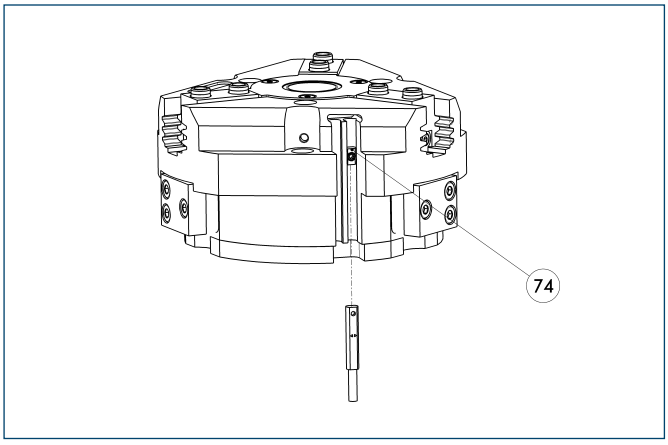


(74) Stop for MMS-P

Position monitoring with two programmable positions per sensor. The end position monitoring is mounted in the C-slot.

| Description | ID | Recommended product |
|---|---|---|
| Programmable magnetic switch | | |
| MMS-P 22-S-M8-PNP | **0301370** | • |
| MMSK-P 22-S-PNP | **0301371** | |
| Connection cables | | |
| KA BG08-L 4P-0500 | **0307767** | |
| KA BG08-L 4P-1000 | **0307768** | |
| KA BW08-L 4P-0500 | **0307765** | |
| KA BW08-L 4P-1000 | **0307766** | |
| Sensor Distributor | | |
| V2-M8-4P-2XM8-3P | **0301380** | |

ⓘ Please note the minimum permitted bending radii for the sensor cables, which are generally 35 mm.

ⓘ Per gripper one sensor (closer/NO) is required, optionally a cable extension.

## Compensation unit with spring reset

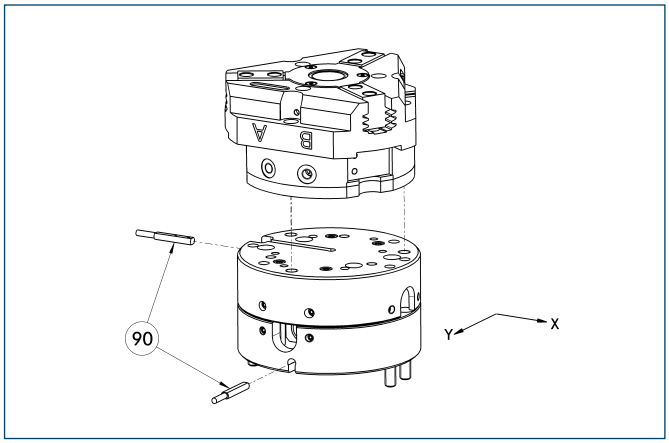


(90) Monitoring

Grippers can be directly mounted without using an adapter plate. For details see our catalog “Robot Accessories”.

| Description | ID | Compensation travel | Reset force |
|---|---|---|---|
| Compensation unit | | | |
| AGE-F-XY-063-1 | **0324940** | ±4 mm | 9 N |
| AGE-F-XY-063-2 | **0324941** | ±4 mm | 10 N |
| AGE-F-XY-063-3 | **0324942** | ±4 mm | 19.3 N |

## Electronic magnetic switches

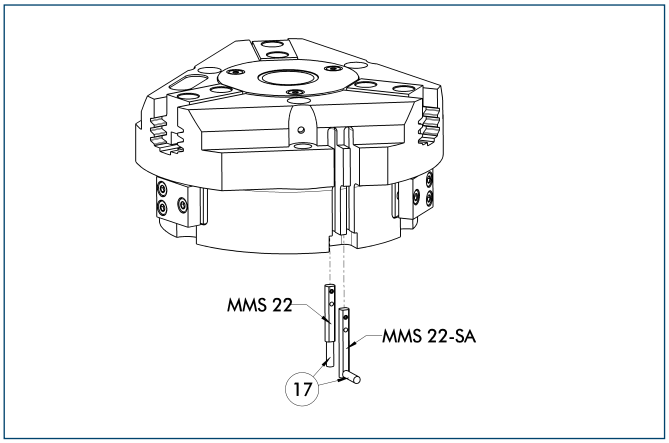


⑰ Cable outlet

End position monitoring for mounting in the C-slot

| Description | ID | Recommended product |
|---|---|---|
| Electronic magnetic switches | | |
| MMS 22-S-M5-PNP | **0301438** | |
| MMS 22-S-M5-NPN | **0301439** | |
| MMS 22-S-M8-PNP | **0301432** | • |
| MMS 22-S-M8-NPN | **0301433** | |
| MMSK 22-S-PNP | **0301434** | |
| MMSK 22-S-NPN | **0301435** | |
| Electronic magnetic switches with lateral cable outlet | | |
| MMS 22-S-M5-PNP-SA | **0301448** | |
| MMS 22-S-M5-NPN-SA | **0301449** | |
| MMS 22-S-M8-PNP-SA | **0301442** | • |
| MMS 22-S-M8-NPN-SA | **0301443** | |
| MMSK 22-S-PNP-SA | **0301444** | |
| MMSK 22-S-NPN-SA | **0301445** | |
| Connection cables | | |
| KA BG05-L 3P-0300 | **0301652** | |
| KA BG08-L 3P-0300-PNP | **0301622** | |
| KA BG08-L 3P-0500-PNP | **0301623** | |
| KA BW05-L 3P-0300 | **0301650** | |
| KA BW08-L 3P-0300-NPN | **0301602** | |
| KA BW08-L 3P-0300-PNP | **0301594** | |
| KA BW08-L 3P-0500-NPN | **9641116** | |
| KA BW08-L 3P-0500-PNP | **0301502** | |
| Cable extensions | | |
| KV BW08-SG08 3P-0030-PNP | **0301495** | |
| KV BW08-SG08 3P-0100-PNP | **0301496** | |
| KV BW08-SG08 3P-0200-PNP | **0301497** | |

ⓘ Please note the minimum permitted bending radii for the sensor cables, which are generally 35 mm.

## Inductive proximity switches

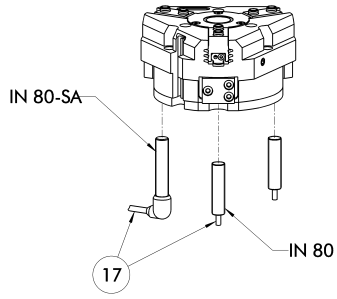


⑰ Cable outlet

| Description | ID | Recommended product |
|---|---|---|
| Inductive proximity switches | | |
| IN 80-S-M8 | **0301478** | • |
| IN 80-S-M12 | **0301578** | |
| INK 80-S | **0301550** | |
| IN-C 80-S-M8 | **0301475** | |
| Inductive proximity switch with lateral outlet | | |
| IN 80-S-M12-SA | **0301587** | |
| IN 80-S-M8-SA | **0301483** | • |
| INK 80-S-SA | **0301566** | |
| Connection cables | | |
| KA BG08-L 3P-0300-PNP | **0301622** | |
| KA BG08-L 3P-0500-PNP | **0301623** | |
| KA BG12-L 3P-0500-PNP | **30016369** | |
| KA BW08-L 3P-0300-PNP | **0301594** | |
| KA BW08-L 3P-0500-PNP | **0301502** | |
| KA BW12-L 3P-0300-PNP | **0301503** | |
| KA BW12-L 3P-0500-PNP | **0301507** | |
| Cable extensions | | |
| KV BG12-SG12 3P-0030-PNP | **0301999** | |
| KV BG12-SG12 3P-0060-PNP | **0301998** | |
| KV BW08-SG08 3P-0030-PNP | **0301495** | |
| KV BW08-SG08 3P-0100-PNP | **0301496** | |
| KV BW08-SG08 3P-0200-PNP | **0301497** | |
| KV BW12-SG12 3P-0030-PNP | **0301595** | |
| KV BW12-SG12 3P-0100-PNP | **0301596** | |
| KV BW12-SG12 3P-0200-PNP | **0301597** | |

ⓘ Please note the minimum permitted bending radii for the sensor cables, which are generally 35 mm.

You can find more detailed information and individual parts of the above-mentioned accessories in the “Accessories” catalog section.

## Cylindrical Reed Switches

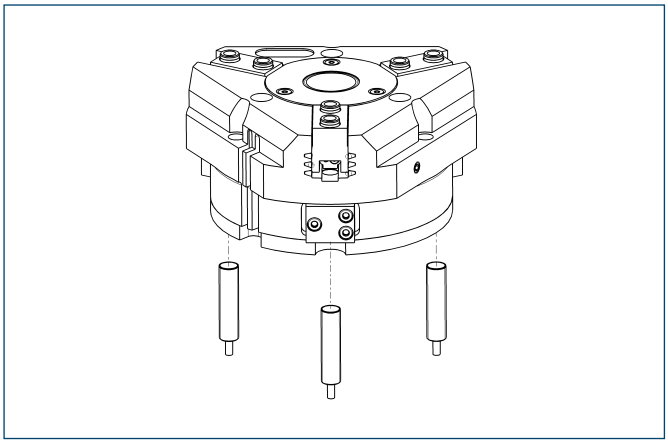

End position monitoring mounted with mounting kit

| Description | ID |
|---|---|
| Mounting kit for proximity switch | |
| AS-RMS 80 PGN/PZN-plus 64/80 | **0377725** |
| Reed Switches | |
| RMS 80-S-M8 | **0377721** |

ⓘ This mounting kit needs to be ordered optionally as an accessory.
ⓘ Please note the minimum permitted bending radii for the sensor cables, which are generally 35 mm.

## Analog position sensor

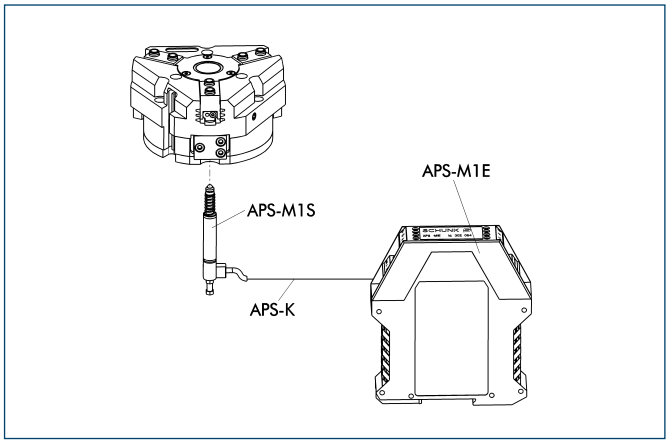


Analog multi position monitoring for any desired positions

| Description | ID |
|---|---|
| Mounting kit | |
| AS-APS-M1-64/1 | **0302075** |
| AS-APS-M1-64/2 | **0302076** |
| Connection cables | |
| APS-K0200 | **0302066** |
| APS-K0700 | **0302068** |
| Electronic Processor | |
| APS-M1E | **0302064** |
| Sensor | |
| APS-M1S | **0302062** |

ⓘ When using an APS system, for each gripper a mounting kit (AS-APS), an APS sensor (APS-M 1S, incl. 3 m cable) as well as an electronics (APS-M1e) are required.
ⓘ An extension cable (APS-K) can be connected between the sensor and the electronics as an option. The max. cable length between the sensor and the electronics is 10 m, between the electronics and their control unit (PLC) it is max. 1 m.


You can find more detailed information and individual parts of the above-mentioned accessories in the “Accessories” catalog section.

## Flexible Position Sensor

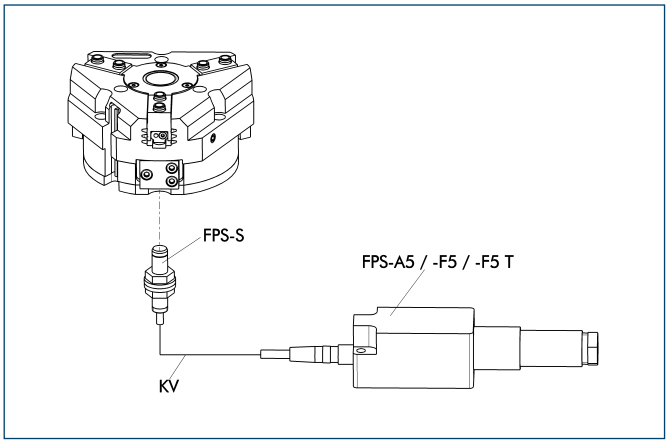


Flexible position monitoring of up to five positions

| Description | ID |
|---|---|
| Mounting kit for FPS | |
| AS-PGN/PZN-plus 64/1, PGN/PZN-plus 80/2 | **0301630** |
| Electronic Processor | |
| FPS-F5 | **0301805** |
| FPS-F5 T | **0301807** |
| Sensor | |
| FPS-S M8 | **0301704** |

ⓘ When using a FPS system, a FPS sensor (FPS-S) and a control unit (FPS-F5 / F5 T or A5) are required for each gripper as well as a mounting kit (AS), if listed. Cable extensions (KV) are available as options in the “Accessories” catalog section.

You can find more detailed information and individual parts of the above-mentioned accessories in the “Accessories” catalog section.

# PZB-plus 100

**Pneumatic • 3-Finger Centric Gripper • Universal Gripper**



## Gripping force, I.D. gripping

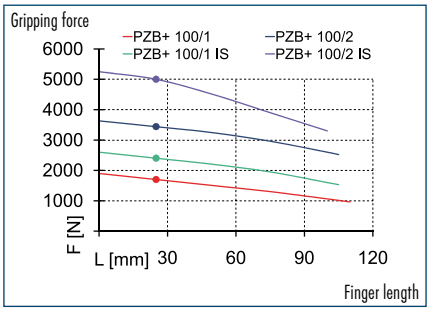


## Gripping force, O.D. gripping

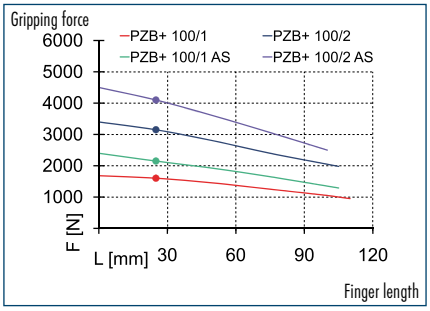


## Finger load

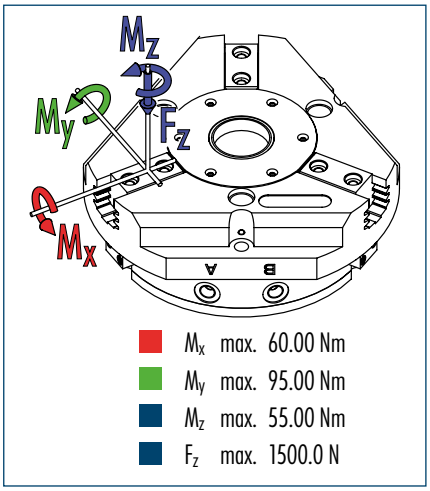


- $M_x$ max. 60.00 Nm
- $M_y$ max. 95.00 Nm
- $M_z$ max. 55.00 Nm
- $F_z$ max. 1500.0 N

ⓘ The indicated moments and forces are static values, apply per base jaw and may occur simultaneously. $M_y$ may arise in addition to the moment generated by the gripping force itself. If the max. permitted finger weight is exceeded, it is imperative to throttle the air pressure so that the jaw movement occurs without any hitting or bouncing. Service life may be reduced.

## Technical data

| Description | | PZB-plus 100-1 | PZB-plus 100-2 | PZB-plus 100-1-AS | PZB-plus 100-2-AS | PZB-plus 100-1-IS | PZB-plus 100-2-IS |
|---|---|---|---|---|---|---|---|
| **ID** | | **0305170** | **0305171** | **0305172** | **0305173** | **0305174** | **0305175** |
| Stroke per finger | [mm] | 8 | 4 | 8 | 4 | 8 | 4 |
| Closing force | [N] | 1600 | 3150 | 2100 | 4050 | | |
| Opening force | [N] | 1700 | 3400 | | | 2380 | 4900 |
| Min. spring force | [N] | | | 500 | 900 | 680 | 1500 |
| Weight | [kg] | 1.5 | 1.5 | 2.3 | 2.3 | 2.3 | 2.3 |
| Recommended workpiece weight | [kg] | 5 | 11.5 | 5 | 11.5 | 5 | 11.5 |
| Air consumption per double stroke | [cm³] | 92 | 92 | 185 | 185 | 185 | 185 |
| Min./max. operating pressure | [bar] | 2/8 | 2/8 | 4/6.5 | 4/6.5 | 4/6.5 | 4/6.5 |
| Nominal operating pressure | [bar] | 6 | 6 | 6 | 6 | 6 | 6 |
| Closing/opening time | [s] | 0.1/0.1 | 0.1/0.1 | 0.1/0.2 | 0.1/0.2 | 0.2/0.1 | 0.2/0.1 |
| Max. permitted finger length | [mm] | 110 | 105 | 105 | 100 | 105 | 100 |
| Max. permitted weight per finger | [kg] | 0.6 | 0.6 | 0.6 | 0.6 | 0.6 | 0.6 |
| IP class | | 40 | 40 | 40 | 40 | 40 | 40 |
| Min./max. ambient temperature | [°C] | -10/90 | -10/90 | -10/90 | -10/90 | -10/90 | -10/90 |
| Repeat accuracy | [mm] | 0.01 | 0.01 | 0.01 | 0.01 | 0.01 | 0.01 |
| Diameter of center bore | [mm] | 20 | 20 | 20 | 20 | 20 | 20 |

## Main view

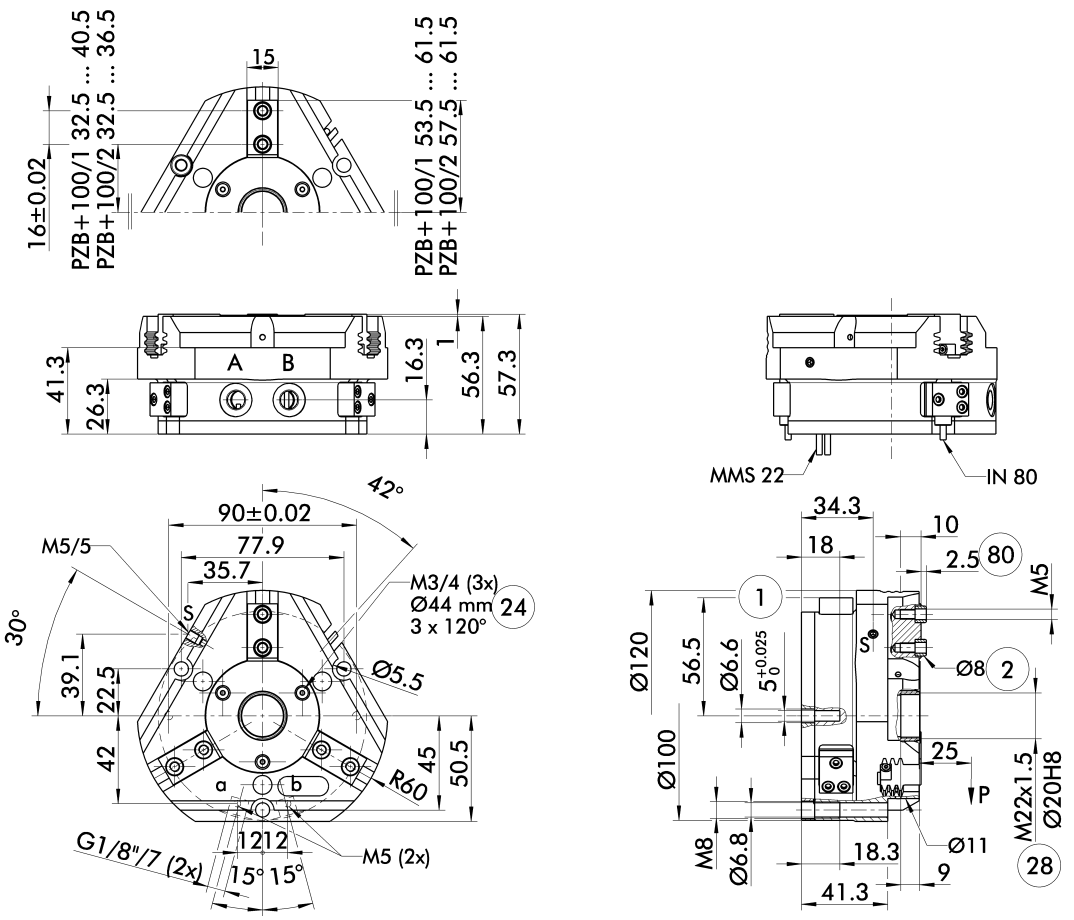


The drawing shows the gripper in the basic version with closed jaws, the dimensions do not include the options described below.

A, a Main/direct connection, gripper opening
B, b Main/direct connection, gripper closing
S Air purge connection
① Gripper connection
② Finger connection
㉔ Bolt circle
㉘ Through-bore
㉚ Depth of the centering sleeve hole in the matching part

## AS/IS gripping force maintenance device

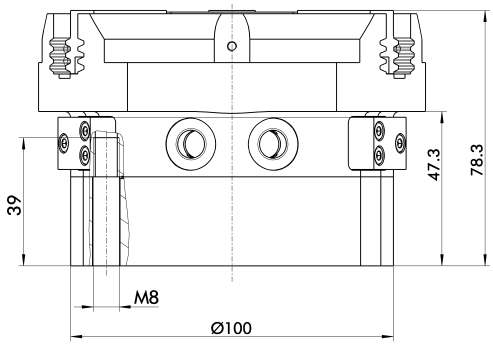


The mechanical gripping force maintenance device ensures a minimum gripping force even in case of pressure drop. This acts as closing force in the AS version, and as opening force in the IS version. In addition, the gripping force maintenance device can also be used for increasing the gripping force or for single-acting gripping.

## Spring-loaded pressure piece

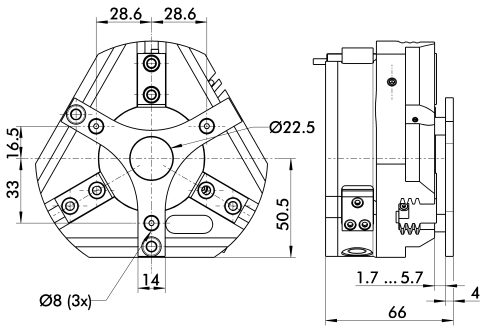


For spring-supported positioning of the workpiece against a stop after the gripper has opened. Especially developed for loading machines.

| Description | ID | Stroke | Min. force |
|---|---|---|---|
| Spring-loaded pressure piece | | | |
| A-PZB-plus 100 | **0305176** | 4 mm | 18 N |

You can find more detailed information and individual parts of the above-mentioned accessories in the “Accessories” catalog section.

## Quick-change Jaw System

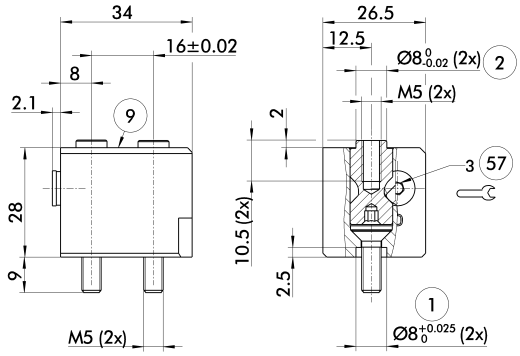


① Gripper connection
② Finger connection
⑨ For mounting screw connection diagram, see basic version
㊼ Locking

The BSWS quick-change jaw system enables top jaws to be changed on the gripper manually and rapidly. An adapter (BSWS-A) and a base (BSWS-B) are required for each gripper jaw.
For a reverse assembly without height set-up, one adapter (BSWS-A) and a kit (BSWS-U) per gripper jaw are required. Another effect of the BSWS-U is, that there are no disturbing fastening bores in the finger contour.

| Description | ID |
|---|---|
| Quick-change Jaw System adapter | |
| BSWS-A 80 | **0303024** |
| Quick-change Jaw System base | |
| BSWS-B 80 | **0303025** |
| Quick-change Jaw System reversed | |
| BSWS-U 80 | **0303042** |

## Universal intermediate jaw

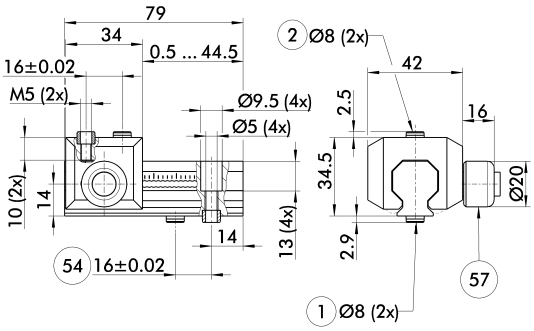


① Gripper connection
② Finger connection
㊹ Optional right or left connection
㊼ Locking

The universal intermediate jaw allows fast tool-free and reliable plugging and shifting of top jaws at the gripper.

| Description | ID | Grid dimension |
|---|---|---|
| Universal intermediate jaw | | |
| UZB 80 | **0300043** | 2 mm |
| UZB-S 80 | **5518271** | 2 mm |

ⓘ The slide UZB-S can be removed completely and has to be ordered separately. Moreover, it allows a fast jaw change.

You can find more detailed information and individual parts of the above-mentioned accessories in the “Accessories” catalog section.

## Force measuring jaws

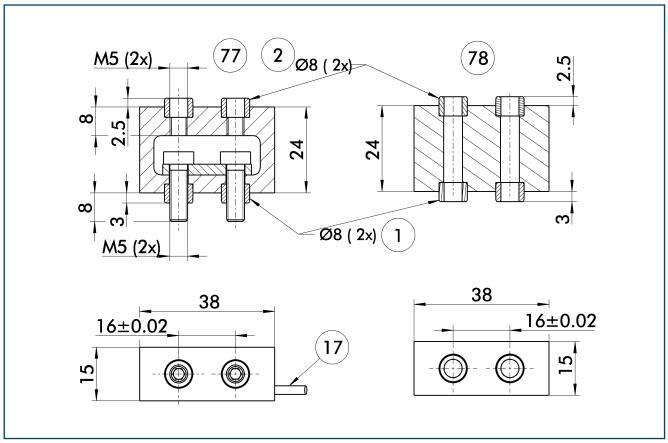


① Gripper connection
② Finger connection
⑰ Cable outlet
⑦⑦ Active intermediate jaws
⑦⑧ Passive intermediate jaws

Force measuring jaws measure gripping forces, but can also determine workpiece weights or dimensional deviations. There are active and passive intermediate jaws (FMS-ZBA or FMS-ZBP). At least one active force measuring jaw is required per gripper, the rest can be passive. For each active jaw, a FMS-A1 control unit and a FMS-A connection cable are required.

| Description | ID |
|---|---|
| Active intermediate jaws | |
| FMS-ZBA 80 | **0301834** |
| Passive intermediate jaws | |
| FMS-ZBP 80 | **0301835** |
| Electronic Processor | |
| FMS-A1 | **0301810** |
| Connection cables | |
| FMS-AK0200 | **0301820** |
| FMS-AK0500 | **0301821** |
| FMS-AK1000 | **0301822** |
| FMS-AK2000 | **0301823** |

## Finger blanks

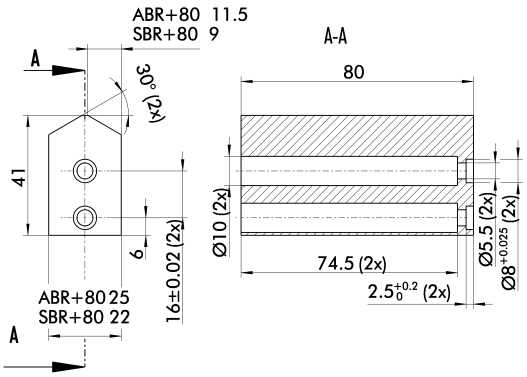


Finger blanks for customized subsequent machining

| Description | ID | Material | Scope of delivery |
|---|---|---|---|
| Finger blanks | | | |
| ABR-plus 80 | **0300011** | Aluminum | 1 |
| SBR-plus 80 | **0300021** | 16 MnCr 5 | 1 |

You can find more detailed information and individual parts of the above-mentioned accessories in the “Accessories” catalog section.

## Tolerance compensation unit

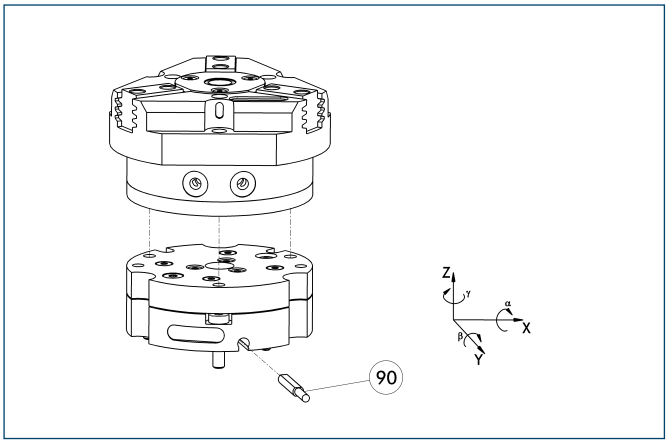


(90) Monitoring of locking

Grippers can be directly mounted without an adapter plate. Tolerance compensation unit and gripper have an identical screw connection diagram. Therefore the tolerance compensation units can be assembled later. Please consider the additional assembly height of the tolerance compensation unit. For details see catalog “Robot Accessories”.

| Description | ID | Locking | Deflection |
|---|---|---|---|
| Compensation unit | | | |
| TCU-100-2-MV-Z | **0324794** | Yes | |
| TCU-100-2-OV-Z | **0324799** | No | |

## Programmable magnetic switch

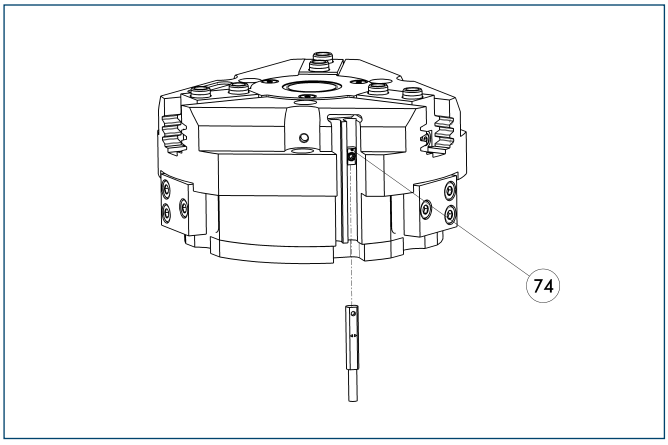


(74) Stop for MMS-P

Position monitoring with two programmable positions per sensor. The end position monitoring is mounted in the C-slot.

| Description | ID | Recommended product |
|---|---|---|
| Programmable magnetic switch | | |
| MMS-P 22-S-M8-PNP | **0301370** | • |
| MMSK-P 22-S-PNP | **0301371** | |
| Connection cables | | |
| KA BG08-L 4P-0500 | **0307767** | |
| KA BG08-L 4P-1000 | **0307768** | |
| KA BW08-L 4P-0500 | **0307765** | |
| KA BW08-L 4P-1000 | **0307766** | |
| Sensor Distributor | | |
| V2-M8-4P-2XM8-3P | **0301380** | |

ⓘ Please note the minimum permitted bending radii for the sensor cables, which are generally 35 mm.

ⓘ Per gripper one sensor (closer/NO) is required, optionally a cable extension.

## Compensation unit with spring reset

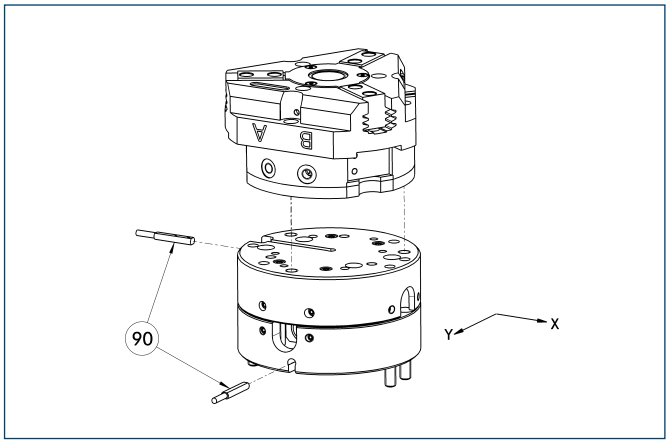


(90) Monitoring

Grippers can be directly mounted without using an adapter plate. For details see our catalog “Robot Accessories”.

| Description | ID | Compensation travel | Reset force |
|---|---|---|---|
| Compensation unit | | | |
| AGE-F-XY-080-1 | **0324960** | ±5 mm | 28.3 N |
| AGE-F-XY-080-2 | **0324961** | ±5 mm | 42.5 N |
| AGE-F-XY-080-3 | **0324962** | ±5 mm | 47.6 N |

## Electronic magnetic switches

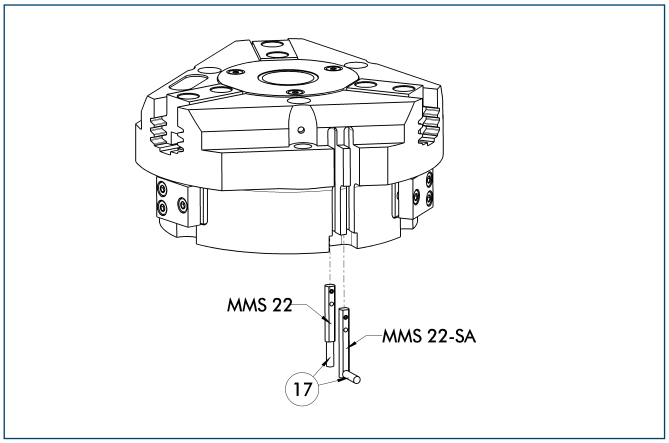


⑰ Cable outlet

End position monitoring for mounting in the C-slot

| Description | ID | Recommended product |
|---|---|---|
| Electronic magnetic switches | | |
| MMS 22-S-M5-PNP | **0301438** | |
| MMS 22-S-M5-NPN | **0301439** | |
| MMS 22-S-M8-PNP | **0301432** | • |
| MMS 22-S-M8-NPN | **0301433** | |
| MMSK 22-S-PNP | **0301434** | |
| MMSK 22-S-NPN | **0301435** | |
| Electronic magnetic switches with lateral cable outlet | | |
| MMS 22-S-M5-PNP-SA | **0301448** | |
| MMS 22-S-M5-NPN-SA | **0301449** | |
| MMS 22-S-M8-PNP-SA | **0301442** | • |
| MMS 22-S-M8-NPN-SA | **0301443** | |
| MMSK 22-S-PNP-SA | **0301444** | |
| MMSK 22-S-NPN-SA | **0301445** | |
| Reed Switches | | |
| RMS 22-S-M8 | **0377720** | • |
| Connection cables | | |
| KA BG05-L 3P-0300 | **0301652** | |
| KA BG08-L 3P-0300-PNP | **0301622** | |
| KA BG08-L 3P-0500-PNP | **0301623** | |
| KA BW05-L 3P-0300 | **0301650** | |
| KA BW08-L 3P-0300-NPN | **0301602** | |
| KA BW08-L 3P-0300-PNP | **0301594** | |
| KA BW08-L 3P-0500-NPN | **9641116** | |
| KA BW08-L 3P-0500-PNP | **0301502** | |
| Cable extensions | | |
| KV BW08-SG08 3P-0030-PNP | **0301495** | |
| KV BW08-SG08 3P-0100-PNP | **0301496** | |
| KV BW08-SG08 3P-0200-PNP | **0301497** | |

ⓘ Please note the minimum permitted bending radii for the sensor cables, which are generally 35 mm.

## Inductive proximity switches

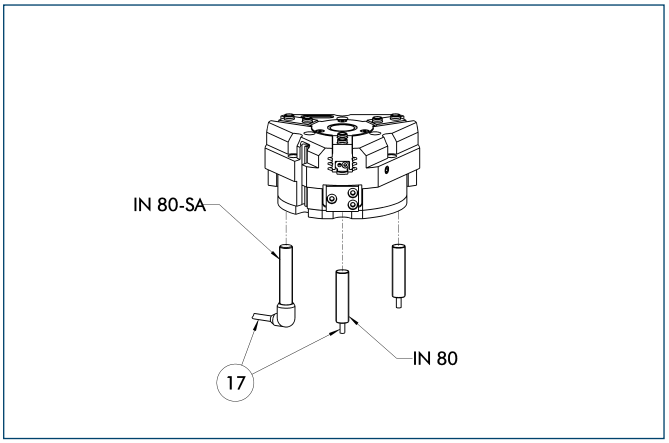


⑰ Cable outlet

| Description | ID | Recommended product |
|---|---|---|
| Inductive proximity switches | | |
| IN 80-S-M8 | **0301478** | • |
| IN 80-S-M12 | **0301578** | |
| INK 80-S | **0301550** | |
| IN-C 80-S-M8 | **0301475** | |
| Inductive proximity switch with lateral outlet | | |
| IN 80-S-M12-SA | **0301587** | |
| IN 80-S-M8-SA | **0301483** | • |
| INK 80-S-SA | **0301566** | |
| Connection cables | | |
| KA BG08-L 3P-0300-PNP | **0301622** | |
| KA BG08-L 3P-0500-PNP | **0301623** | |
| KA BG12-L 3P-0500-PNP | **30016369** | |
| KA BW08-L 3P-0300-PNP | **0301594** | |
| KA BW08-L 3P-0500-PNP | **0301502** | |
| KA BW12-L 3P-0300-PNP | **0301503** | |
| KA BW12-L 3P-0500-PNP | **0301507** | |
| Cable extensions | | |
| KV BG12-SG12 3P-0030-PNP | **0301999** | |
| KV BG12-SG12 3P-0060-PNP | **0301998** | |
| KV BW08-SG08 3P-0030-PNP | **0301495** | |
| KV BW08-SG08 3P-0100-PNP | **0301496** | |
| KV BW08-SG08 3P-0200-PNP | **0301497** | |
| KV BW12-SG12 3P-0030-PNP | **0301595** | |
| KV BW12-SG12 3P-0100-PNP | **0301596** | |
| KV BW12-SG12 3P-0200-PNP | **0301597** | |

ⓘ Please note the minimum permitted bending radii for the sensor cables, which are generally 35 mm.

You can find more detailed information and individual parts of the above-mentioned accessories in the “Accessories” catalog section.

## Cylindrical Reed Switches

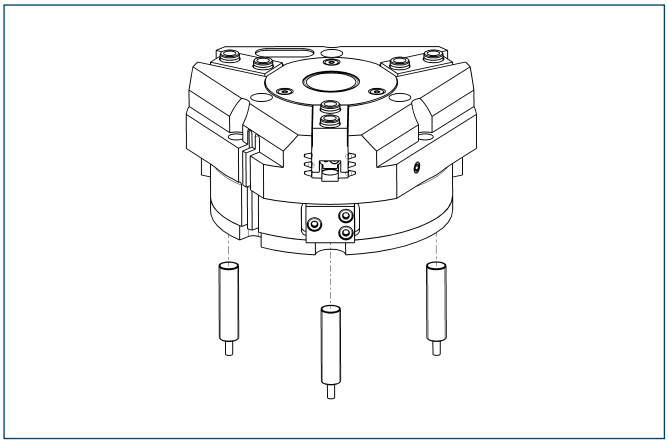

End position monitoring mounted with mounting kit

| Description | ID |
|---|---|
| Mounting kit for proximity switch | |
| AS-RMS 80 PGN/PZN-plus 64/80 | **0377725** |
| Reed Switches | |
| RMS 80-S-M8 | **0377721** |

ⓘ This mounting kit needs to be ordered optionally as an accessory.
ⓘ Please note the minimum permitted bending radii for the sensor cables, which are generally 35 mm.

## Analog position sensor

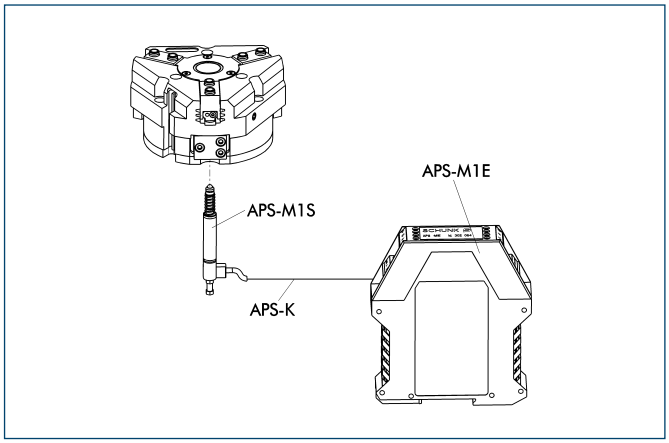


Analog multi position monitoring for any desired positions

| Description | ID |
|---|---|
| Mounting kit | |
| AS-APS-M1-80/1 | **0302077** |
| AS-APS-M1-80/2 | **0302078** |
| Connection cables | |
| APS-K0200 | **0302066** |
| APS-K0700 | **0302068** |
| Electronic Processor | |
| APS-M1E | **0302064** |
| Sensor | |
| APS-M1S | **0302062** |

ⓘ When using an APS system, for each gripper a mounting kit (AS-APS), an APS sensor (APS-M 1S, incl. 3 m cable) as well as an electronics (APS-M1e) are required.
ⓘ An extension cable (APS-K) can be connected between the sensor and the electronics as an option. The max. cable length between the sensor and the electronics is 10 m, between the electronics and their control unit (PLC) it is max. 1 m.


You can find more detailed information and individual parts of the above-mentioned accessories in the “Accessories” catalog section.

## Flexible Position Sensor

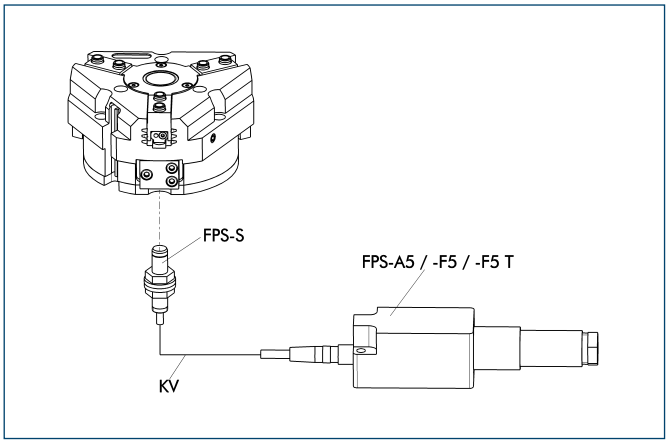


Flexible position monitoring of up to five positions

| Description | ID |
|---|---|
| Mounting kit for FPS | |
| AS-PGN/PZN-plus 64/1, PGN/PZN-plus 80/2 | **0301630** |
| AS-PGN-plus/PZN-plus 80/1, PZB 80/100 | **0301632** |
| Electronic Processor | |
| FPS-F5 | **0301805** |
| FPS-F5 T | **0301807** |
| Sensor | |
| FPS-S M8 | **0301704** |

ⓘ When using a FPS system, a FPS sensor (FPS-S) and a control unit (FPS-F5 / F5 T or A5) are required for each gripper as well as a mounting kit (AS), if listed. Cable extensions (KV) are available as options in the “Accessories” catalog section.

You can find more detailed information and individual parts of the above-mentioned accessories in the “Accessories” catalog section.

# PZB-plus 125

**Pneumatic • 3-Finger Centric Gripper • Universal Gripper**



## Gripping force, I.D. gripping

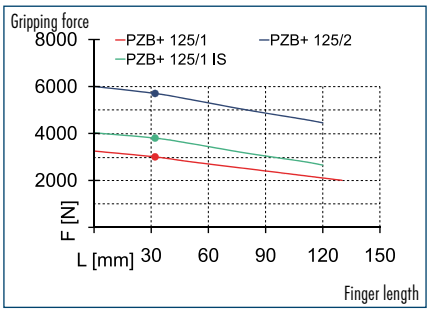


## Gripping force, O.D. gripping

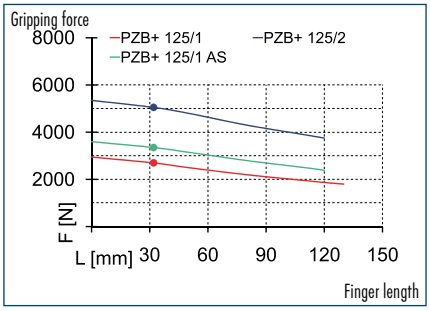


## Finger load

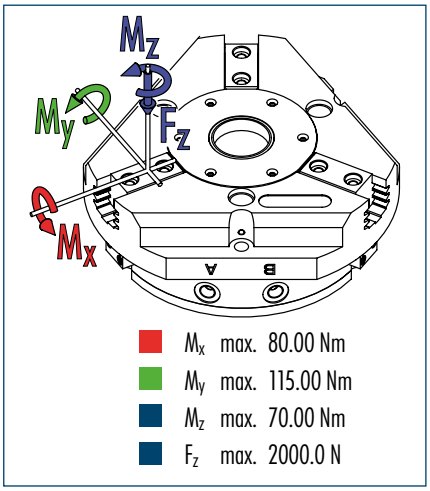


- $M_x$ max. 80.00 Nm
- $M_y$ max. 115.00 Nm
- $M_z$ max. 70.00 Nm
- $F_z$ max. 2000.0 N

ⓘ The indicated moments and forces are static values, apply per base jaw and may occur simultaneously. $M_y$ may arise in addition to the moment generated by the gripping force itself. If the max. permitted finger weight is exceeded, it is imperative to throttle the air pressure so that the jaw movement occurs without any hitting or bouncing. Service life may be reduced.

## Technical data

| Description | | PZB-plus 125-1 | PZB-plus 125-2 | PZB-plus 125-1-AS | PZB-plus 125-1-IS |
|---|---|---|---|---|---|
| **ID** | | **0305180** | **0305181** | **0305182** | **0305184** |
| Stroke per finger | [mm] | 10 | 5 | 10 | 10 |
| Closing force | [N] | 2700 | 5050 | 3350 | |
| Opening force | [N] | 3000 | 5700 | | 3750 |
| Min. spring force | [N] | | | 650 | 750 |
| Weight | [kg] | 2.5 | 2.5 | 4 | 4 |
| Recommended workpiece weight | [kg] | 9 | 20 | 9 | 9 |
| Air consumption per double stroke | [cm³] | 65 | 65 | 300 | 300 |
| Min./max. operating pressure | [bar] | 2/8 | 2/8 | 4/6.5 | 4/6.5 |
| Nominal operating pressure | [bar] | 6 | 6 | 6 | 6 |
| Closing/opening time | [s] | 0.2/0.2 | 0.2/0.2 | 0.17/0.35 | 0.35/0.17 |
| Max. permitted finger length | [mm] | 130 | 120 | 120 | 120 |
| Max. permitted weight per finger | [kg] | 1.1 | 1.1 | 1.1 | 1.1 |
| IP class | | 40 | 40 | 40 | 40 |
| Min./max. ambient temperature | [°C] | -10/90 | -10/90 | -10/90 | -10/90 |
| Repeat accuracy | [mm] | 0.01 | 0.01 | 0.01 | 0.01 |
| Diameter of center bore | [mm] | 25 | 25 | 25 | 25 |

## Main view

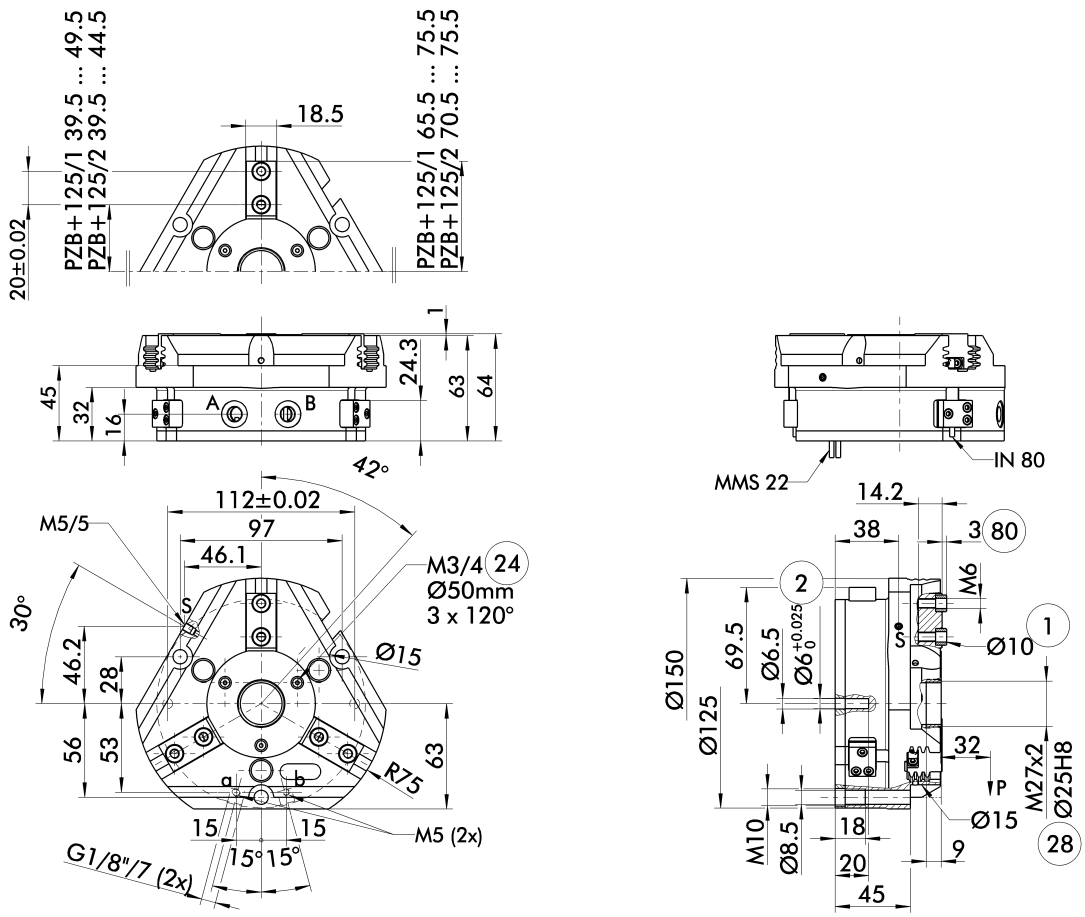


The drawing shows the gripper in the basic version with closed jaws, the dimensions do not include the options described below.

A, a Main/direct connection, gripper opening
B, b Main/direct connection, gripper closing
S Air purge connection, or deaeration bore
① Gripper connection
② Finger connection
㉔ Bolt circle
㉘ Through-bore
㉚ Depth of the centering sleeve hole in the matching part

## AS/IS gripping force maintenance device

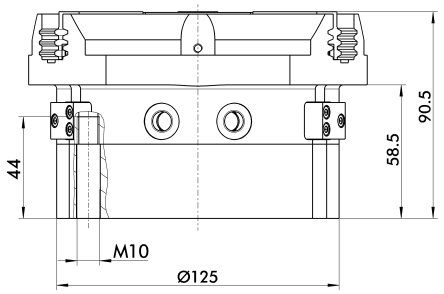


The mechanical gripping force maintenance device ensures a minimum gripping force even in case of pressure drop. This acts as closing force in the AS version, and as opening force in the IS version. In addition, the gripping force maintenance device can also be used for increasing the gripping force or for single-acting gripping.

## Spring-loaded pressure piece

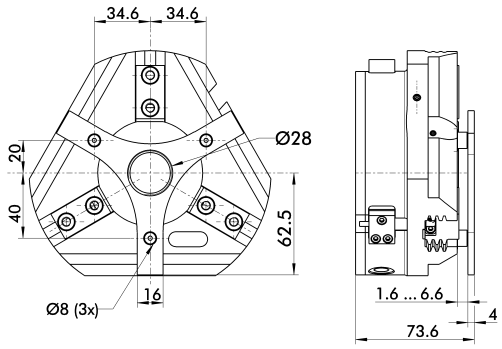


For spring-supported positioning of the workpiece against a stop after the gripper has opened. Especially developed for loading machines.

| Description | ID | Stroke | Min. force |
|---|---|---|---|
| Spring-loaded pressure piece | | | |
| A-PZB-plus 125 | **0305186** | 5 mm | 35 N |

You can find more detailed information and individual parts of the above-mentioned accessories in the “Accessories” catalog section.

## Quick-change Jaw System

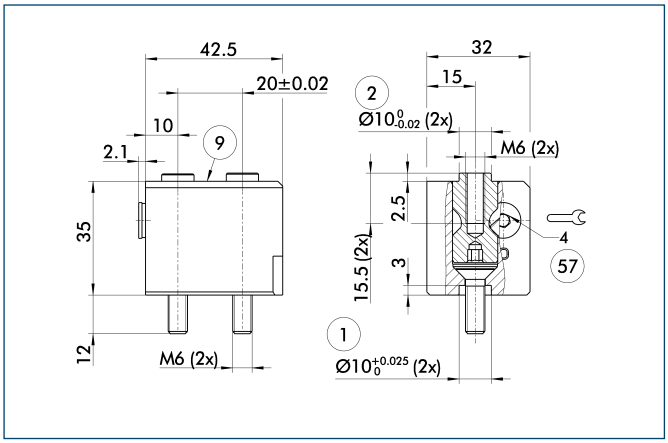


① Gripper connection
② Finger connection
⑨ For mounting screw connection diagram, see basic version
㊼ Locking

The BSWS quick-change jaw system enables top jaws to be changed on the gripper manually and rapidly. An adapter (BSWS-A) and a base (BSWS-B) are required for each gripper jaw.
For a reverse assembly without height set-up, one adapter (BSWS-A) and a kit (BSWS-U) per gripper jaw are required. Another effect of the BSWS-U is, that there are no disturbing fastening bores in the finger contour.

| Description | ID |
|---|---|
| Quick-change Jaw System adapter | |
| BSWS-A 100 | **0303026** |
| Quick-change Jaw System base | |
| BSWS-B 100 | **0303027** |
| Quick-change Jaw System reversed | |
| BSWS-U 100 | **0303043** |

## Universal intermediate jaw

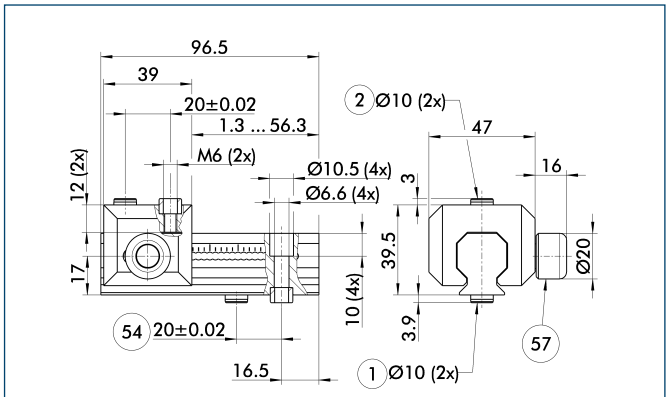


① Gripper connection
② Finger connection
㊹ Optional right or left connection
㊼ Locking

The universal intermediate jaw allows fast tool-free and reliable plugging and shifting of top jaws at the gripper.

| Description | ID | Grid dimension |
|---|---|---|
| Universal intermediate jaw | | |
| UZB 100 | **0300044** | 2.5 mm |
| UZB-S 100 | **5518272** | 2.5 mm |

ⓘ The slide UZB-S can be removed completely and has to be ordered separately. Moreover, it allows a fast jaw change.

You can find more detailed information and individual parts of the above-mentioned accessories in the “Accessories” catalog section.

## Force measuring jaws

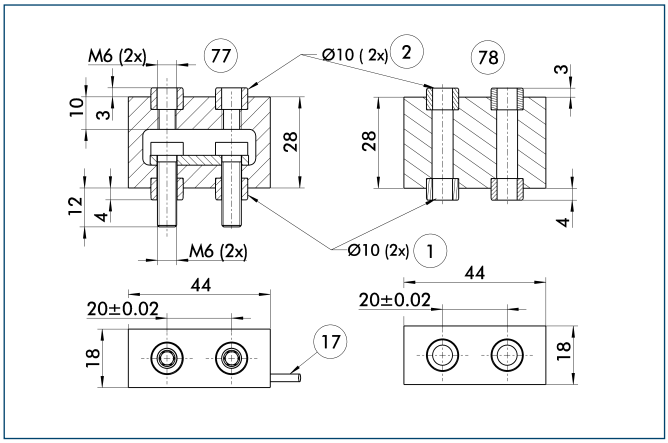


① Gripper connection
② Finger connection
⑰ Cable outlet
⑦⑦ Active intermediate jaws
⑦⑧ Passive intermediate jaws

Force measuring jaws measure gripping forces, but can also determine workpiece weights or dimensional deviations. There are active and passive intermediate jaws (FMS-ZBA or FMS-ZBP). At least one active force measuring jaw is required per gripper, the rest can be passive. For each active jaw, a FMS-A1 control unit and a FMS-A connection cable are required.

| Description | ID |
|---|---|
| Active intermediate jaws | |
| FMS-ZBA 100 | **0301836** |
| Passive intermediate jaws | |
| FMS-ZBP 100 | **0301837** |
| Electronic Processor | |
| FMS-A1 | **0301810** |
| Connection cables | |
| FMS-AK0200 | **0301820** |
| FMS-AK0500 | **0301821** |
| FMS-AK1000 | **0301822** |
| FMS-AK2000 | **0301823** |

## Finger blanks

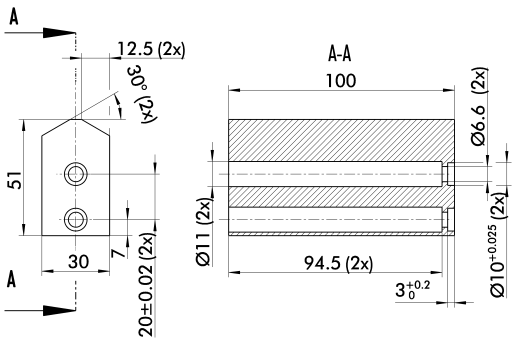


Finger blanks for customized subsequent machining

| Description | ID | Material | Scope of delivery |
|---|---|---|---|
| Finger blanks | | | |
| ABR-plus 100 | **0300012** | Aluminum | 1 |
| SBR-plus 100 | **0300022** | 16 MnCr 5 | 1 |

You can find more detailed information and individual parts of the above-mentioned accessories in the “Accessories” catalog section.

## Tolerance compensation unit

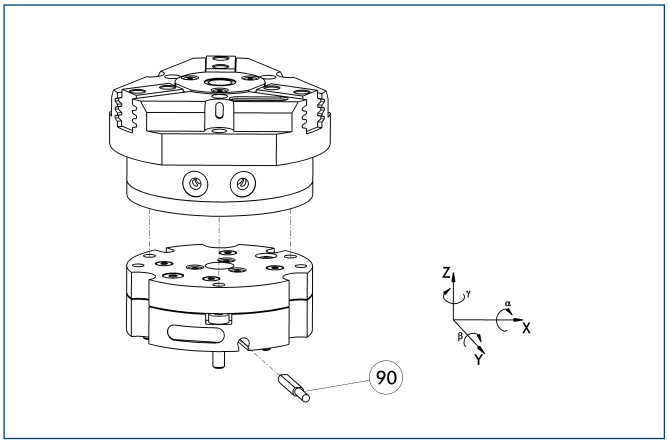


(90) Monitoring of locking

Grippers can be directly mounted without an adapter plate. Tolerance compensation unit and gripper have an identical screw connection diagram. Therefore the tolerance compensation units can be assembled later. Please consider the additional assembly height of the tolerance compensation unit. For details see catalog “Robot Accessories”.

| Description | ID | Locking | Deflection |
|---|---|---|---|
| Compensation unit | | | |
| TCU-125-3-MV-Z | **0324820** | Yes | |
| TCU-125-3-OV-Z | **0324821** | No | |

## Programmable magnetic switch

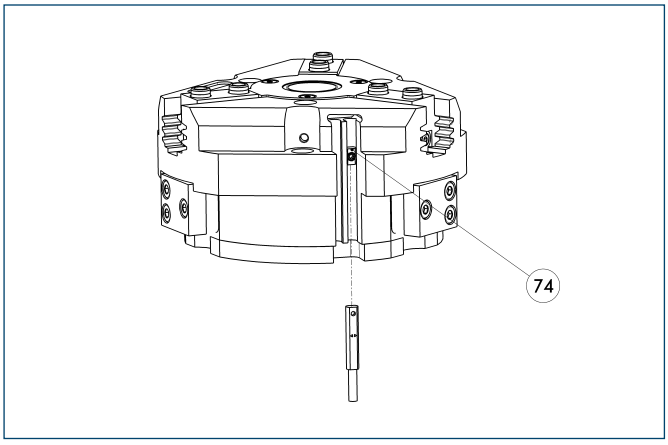


(74) Stop for MMS-P

Position monitoring with two programmable positions per sensor. The end position monitoring is mounted in the C-slot.

| Description | ID | Recommended product |
|---|---|---|
| Programmable magnetic switch | | |
| MMS-P 22-S-M8-PNP | **0301370** | • |
| MMSK-P 22-S-PNP | **0301371** | |
| Connection cables | | |
| KA BG08-L 4P-0500 | **0307767** | |
| KA BG08-L 4P-1000 | **0307768** | |
| KA BW08-L 4P-0500 | **0307765** | |
| KA BW08-L 4P-1000 | **0307766** | |
| Sensor Distributor | | |
| V2-M8-4P-2XM8-3P | **0301380** | |

ⓘ Please note the minimum permitted bending radii for the sensor cables, which are generally 35 mm.

ⓘ Per gripper one sensor (closer/NO) is required, optionally a cable extension.

## Compensation unit with spring reset

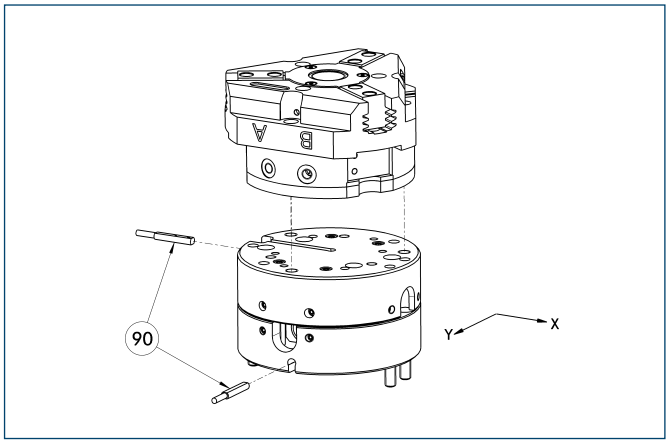


(90) Monitoring

Grippers can be directly mounted without using an adapter plate. For details see our catalog “Robot Accessories”.

| Description | ID | Compensation travel | Reset force |
|---|---|---|---|
| Compensation unit | | | |
| AGE-F-XY-080-1 | **0324960** | ±5 mm | 28.3 N |
| AGE-F-XY-080-2 | **0324961** | ±5 mm | 42.5 N |
| AGE-F-XY-080-3 | **0324962** | ±5 mm | 47.6 N |

## Electronic magnetic switches

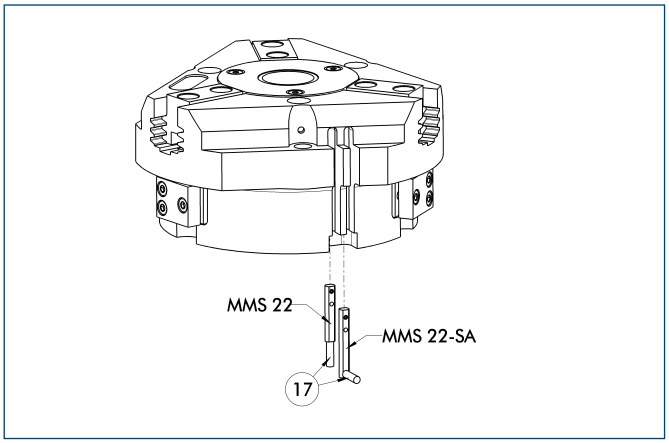


⑰ Cable outlet

End position monitoring for mounting in the C-slot

| Description | ID | Recommended product |
|---|---|---|
| Electronic magnetic switches | | |
| MMS 22-S-M5-PNP | **0301438** | |
| MMS 22-S-M5-NPN | **0301439** | |
| MMS 22-S-M8-PNP | **0301432** | • |
| MMS 22-S-M8-NPN | **0301433** | |
| MMSK 22-S-PNP | **0301434** | |
| MMSK 22-S-NPN | **0301435** | |
| Electronic magnetic switches with lateral cable outlet | | |
| MMS 22-S-M5-PNP-SA | **0301448** | |
| MMS 22-S-M5-NPN-SA | **0301449** | |
| MMS 22-S-M8-PNP-SA | **0301442** | • |
| MMS 22-S-M8-NPN-SA | **0301443** | |
| MMSK 22-S-PNP-SA | **0301444** | |
| MMSK 22-S-NPN-SA | **0301445** | |
| Reed Switches | | |
| RMS 22-S-M8 | **0377720** | • |
| Connection cables | | |
| KA BG05-L 3P-0300 | **0301652** | |
| KA BG08-L 3P-0300-PNP | **0301622** | |
| KA BG08-L 3P-0500-PNP | **0301623** | |
| KA BW05-L 3P-0300 | **0301650** | |
| KA BW08-L 3P-0300-NPN | **0301602** | |
| KA BW08-L 3P-0300-PNP | **0301594** | |
| KA BW08-L 3P-0500-NPN | **9641116** | |
| KA BW08-L 3P-0500-PNP | **0301502** | |
| Cable extensions | | |
| KV BW08-SG08 3P-0030-PNP | **0301495** | |
| KV BW08-SG08 3P-0100-PNP | **0301496** | |
| KV BW08-SG08 3P-0200-PNP | **0301497** | |

ⓘ Please note the minimum permitted bending radii for the sensor cables, which are generally 35 mm.

## Inductive proximity switches

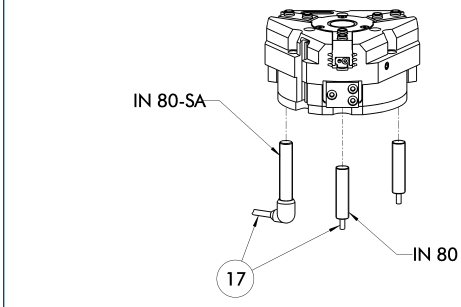


⑰ Cable outlet

| Description | ID | Recommended product |
|---|---|---|
| Inductive proximity switches | | |
| IN 80-S-M8 | **0301478** | • |
| IN 80-S-M12 | **0301578** | |
| INK 80-S | **0301550** | |
| Inductive proximity switch with lateral outlet | | |
| IN 80-S-M12-SA | **0301587** | |
| IN 80-S-M8-SA | **0301483** | • |
| INK 80-S-SA | **0301566** | |
| Connection cables | | |
| KA BG08-L 3P-0300-PNP | **0301622** | |
| KA BG08-L 3P-0500-PNP | **0301623** | |
| KA BG12-L 3P-0500-PNP | **30016369** | |
| KA BW08-L 3P-0300-PNP | **0301594** | |
| KA BW08-L 3P-0500-PNP | **0301502** | |
| KA BW12-L 3P-0300-PNP | **0301503** | |
| KA BW12-L 3P-0500-PNP | **0301507** | |
| Cable extensions | | |
| KV BG12-SG12 3P-0030-PNP | **0301999** | |
| KV BG12-SG12 3P-0060-PNP | **0301998** | |
| KV BW08-SG08 3P-0030-PNP | **0301495** | |
| KV BW08-SG08 3P-0100-PNP | **0301496** | |
| KV BW08-SG08 3P-0200-PNP | **0301497** | |
| KV BW12-SG12 3P-0030-PNP | **0301595** | |
| KV BW12-SG12 3P-0100-PNP | **0301596** | |
| KV BW12-SG12 3P-0200-PNP | **0301597** | |

ⓘ Please note the minimum permitted bending radii for the sensor cables, which are generally 35 mm.

You can find more detailed information and individual parts of the above-mentioned accessories in the “Accessories” catalog section.

## Cylindrical Reed Switches

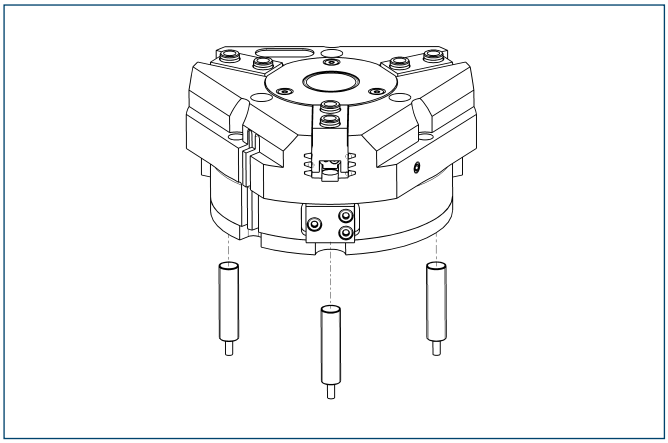

End position monitoring mounted with mounting kit

| Description | ID |
|---|---|
| Mounting kit for proximity switch | |
| AS-RMS 80<br>PGN/PZN-plus 100/125 | **0377726** |
| Reed Switches | |
| RMS 80-S-M8 | **0377721** |

ⓘ This mounting kit needs to be ordered optionally as an accessory.

ⓘ Please note the minimum permitted bending radii for the sensor cables, which are generally 35 mm.

## Analog position sensor

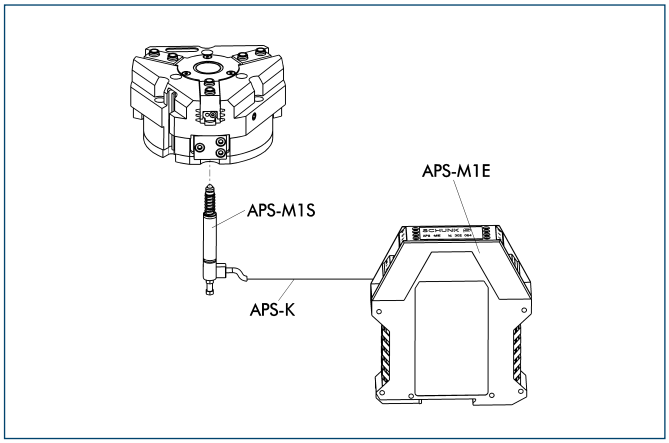


Analog multi position monitoring for any desired positions

| Description | ID |
|---|---|
| Mounting kit | |
| AS-APS-M1-100/1 | **0302079** |
| AS-APS-M1-100/2 | **0302080** |
| Connection cables | |
| APS-K0200 | **0302066** |
| APS-K0700 | **0302068** |
| Electronic Processor | |
| APS-M1E | **0302064** |
| Sensor | |
| APS-M1S | **0302062** |

ⓘ When using an APS system, for each gripper a mounting kit (AS-APS), an APS sensor (APS-M 1S, incl. 3 m cable) as well as an electronics (APS-M1e) are required.

ⓘ An extension cable (APS-K) can be connected between the sensor and the electronics as an option. The max. cable length between the sensor and the electronics is 10 m, between the electronics and their control unit (PLC) it is max. 1 m.


You can find more detailed information and individual parts of the above-mentioned accessories in the “Accessories” catalog section.

## Flexible Position Sensor

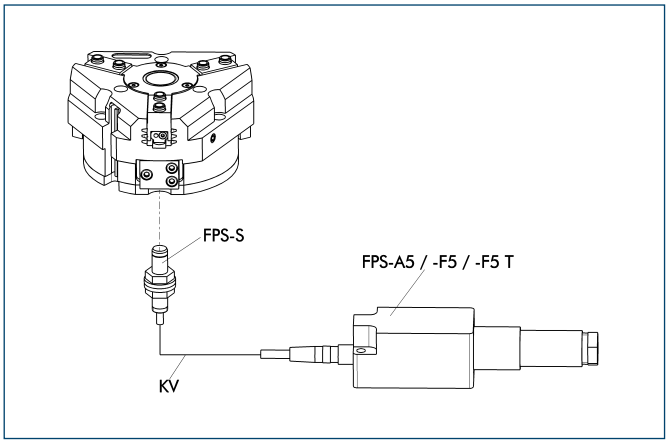


Flexible position monitoring of up to five positions

| Description | ID |
|---|---|
| Mounting kit for FPS | |
| AS-PGN/PZN-plus 100/1 | **0301634** |
| AS-PGN/PZN-plus 100/2, PZB 125 | **0301635** |
| Electronic Processor | |
| FPS-F5 | **0301805** |
| FPS-F5 T | **0301807** |
| Sensor | |
| FPS-S M8 | **0301704** |

ⓘ When using a FPS system, a FPS sensor (FPS-S) and a control unit (FPS-F5 / F5 T or A5) are required for each gripper as well as a mounting kit (AS), if listed. Cable extensions (KV) are available as options in the “Accessories” catalog section.

You can find more detailed information and individual parts of the above-mentioned accessories in the “Accessories” catalog section.

# PZB-plus 160

**Pneumatic • 3-Finger Centric Gripper • Universal Gripper**



## Gripping force, I.D. gripping

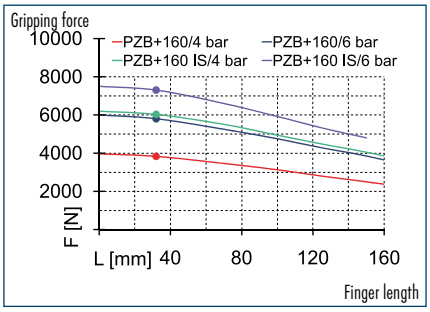


## Gripping force, O.D. gripping

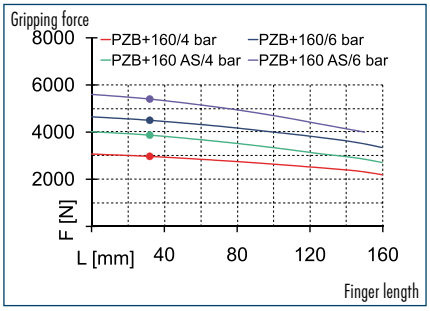


## Finger load

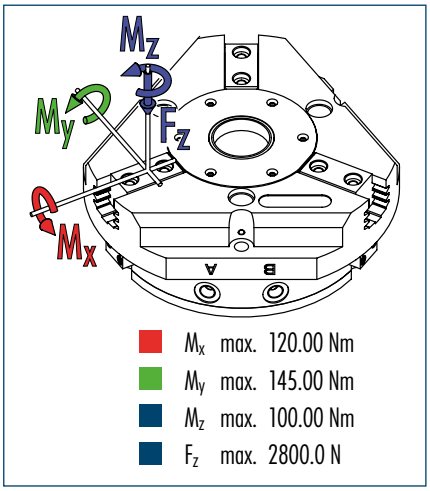


$M_x$ max. 120.00 Nm
$M_y$ max. 145.00 Nm
$M_z$ max. 100.00 Nm
$F_z$ max. 2800.0 N

ⓘ The indicated moments and forces are static values, apply per base jaw and may occur simultaneously. $M_y$ may arise in addition to the moment generated by the gripping force itself. If the max. permitted finger weight is exceeded, it is imperative to throttle the air pressure so that the jaw movement occurs without any hitting or bouncing. Service life may be reduced.

## Technical data

| Description | | PZB-plus 160-1 | PZB-plus 160-1-AS | PZB-plus 160-1-IS |
|---|---|---|---|---|
| **ID** | | **0305190** | **0305192** | **0305194** |
| Stroke per finger | [mm] | 13 | 13 | 13 |
| Closing force | [N] | 4500 | 5400 | |
| Opening force | [N] | 5800 | | 7300 |
| Min. spring force | [N] | | 900 | 1500 |
| Weight | [kg] | 4.8 | 7.3 | 7.3 |
| Recommended workpiece weight | [kg] | 15.5 | 15.5 | 15.5 |
| Air consumption per double stroke | [cm³] | 360 | 620 | 620 |
| Min./max. operating pressure | [bar] | 2/8 | 4/6.5 | 4/6.5 |
| Nominal operating pressure | [bar] | 6 | 6 | 6 |
| Closing/opening time | [s] | 0.5/0.5 | 0.4/0.8 | 0.8/0.4 |
| Max. permitted finger length | [mm] | 160 | 135 | 135 |
| Max. permitted weight per finger | [kg] | 2.1 | 2.1 | 2.1 |
| IP class | | 40 | 40 | 40 |
| Min./max. ambient temperature | [°C] | -10/90 | -10/90 | -10/90 |
| Repeat accuracy | [mm] | 0.02 | 0.02 | 0.02 |
| Diameter of center bore | [mm] | 34 | 34 | 34 |

## Main view

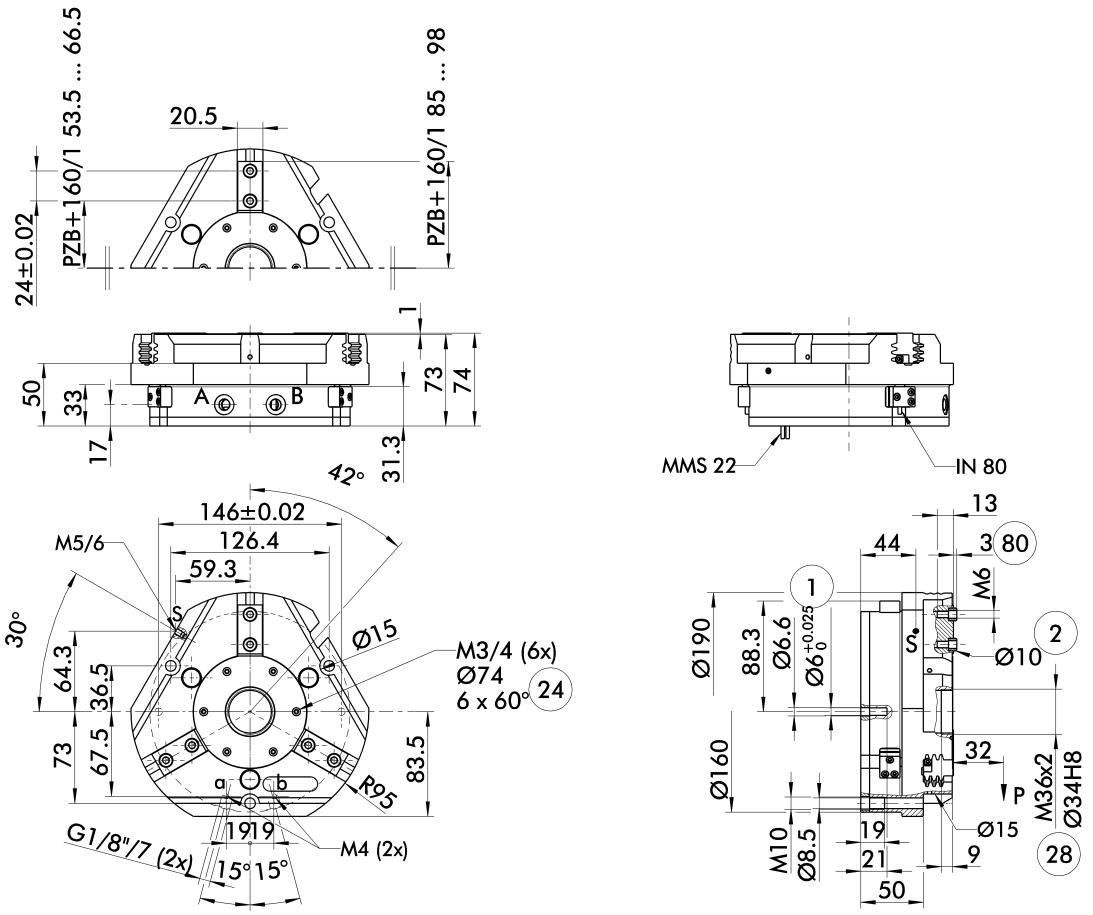


The drawing shows the gripper in the basic version with closed jaws, the dimensions do not include the options described below.

A, a Main/direct connection, gripper opening
B, b Main/direct connection, gripper closing
S Air purge connection
① Gripper connection
② Finger connection
㉔ Bolt circle
㉘ Through-bore
㉚ Depth of the centering sleeve hole in the matching part

## AS/IS gripping force maintenance device

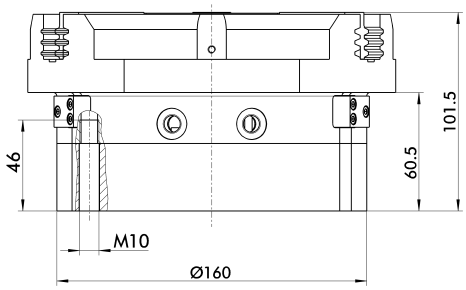


The mechanical gripping force maintenance device ensures a minimum gripping force even in case of pressure drop. This acts as closing force in the AS version, and as opening force in the IS version. In addition, the gripping force maintenance device can also be used for increasing the gripping force or for single-acting gripping.

## Spring-loaded pressure piece

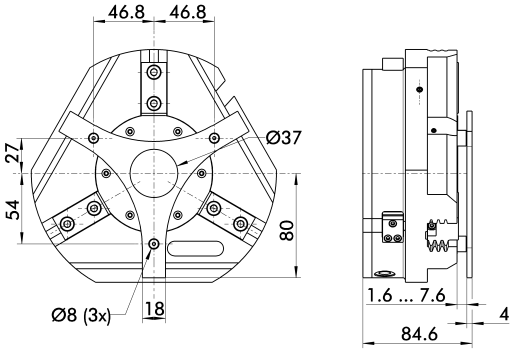


For spring-supported positioning of the workpiece against a stop after the gripper has opened. Especially developed for loading machines.

| Description | ID | Stroke | Min. force |
|---|---|---|---|
| Spring-loaded pressure piece | | | |
| A-PZB-plus 160 | **0305196** | 6 mm | 105 N |

You can find more detailed information and individual parts of the above-mentioned accessories in the "Accessories" catalog section.

## Quick-change Jaw System

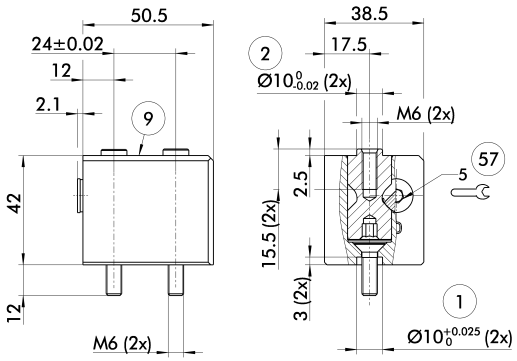


① Gripper connection
② Finger connection
⑨ For mounting screw connection diagram, see basic version
⑤⑦ Locking

The BSWS quick-change jaw system enables top jaws to be changed on the gripper manually and rapidly. An adapter (BSWS-A) and a base (BSWS-B) are required for each gripper jaw.
For a reverse assembly without height set-up, one adapter (BSWS-A) and a kit (BSWS-U) per gripper jaw are required. Another effect of the BSWS-U is, that there are no disturbing fastening bores in the finger contour.

| Description | ID |
|---|---|
| Quick-change Jaw System adapter | |
| BSWS-A 125 | **0303028** |
| Quick-change Jaw System base | |
| BSWS-B 125 | **0303029** |
| Quick-change Jaw System reversed | |
| BSWS-U 125 | **0303044** |

## Universal intermediate jaw

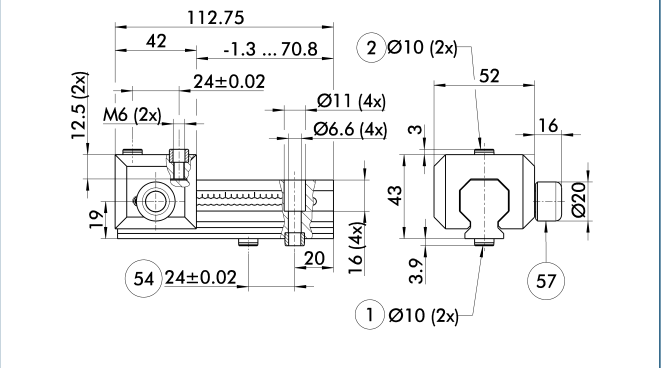


① Gripper connection
② Finger connection
⑤④ Optional right or left connection
⑤⑦ Locking

The universal intermediate jaw allows fast tool-free and reliable plugging and shifting of top jaws at the gripper.

| Description | ID | Grid dimension |
|---|---|---|
| Universal intermediate jaw | | |
| UZB 125 | **0300045** | 3 mm |
| UZB-S 125 | **5518273** | 3 mm |

ⓘ The slide UZB-S can be removed completely and has to be ordered separately. Moreover, it allows a fast jaw change.

You can find more detailed information and individual parts of the above-mentioned accessories in the “Accessories” catalog section.

## Force measuring jaws

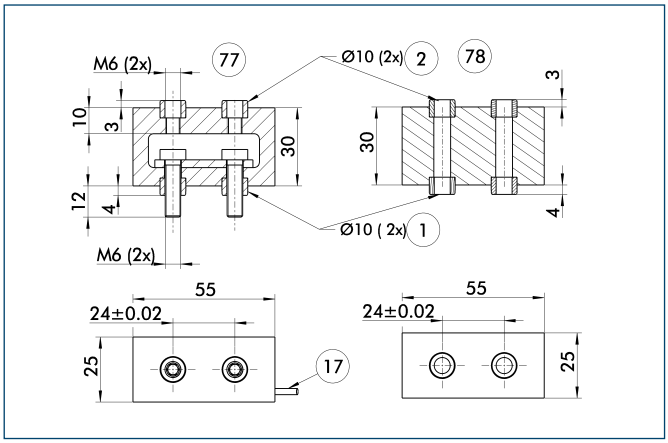


① Gripper connection
② Finger connection
⑰ Cable outlet
⑦⑦ Active intermediate jaws
⑦⑧ Passive intermediate jaws

Force measuring jaws measure gripping forces, but can also determine workpiece weights or dimensional deviations. There are active and passive intermediate jaws (FMS-ZBA or FMS-ZBP). At least one active force measuring jaw is required per gripper, the rest can be passive. For each active jaw, a FMS-A1 control unit and a FMS-A connection cable are required.

| Description | ID |
|---|---|
| Active intermediate jaws | |
| FMS-ZBA 125 | **0301838** |
| Passive intermediate jaws | |
| FMS-ZBP 125 | **0301839** |
| Electronic Processor | |
| FMS-A1 | **0301810** |
| Connection cables | |
| FMS-AK0200 | **0301820** |
| FMS-AK0500 | **0301821** |
| FMS-AK1000 | **0301822** |
| FMS-AK2000 | **0301823** |

## Finger blanks

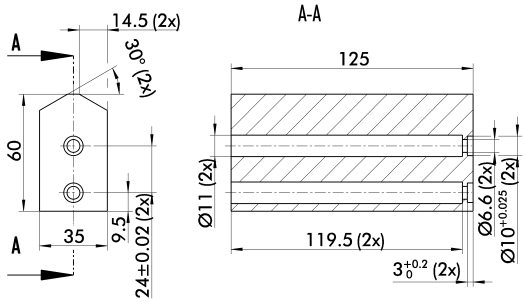


Finger blanks for customized subsequent machining

| Description | ID | Material | Scope of delivery |
|---|---|---|---|
| Finger blanks | | | |
| ABR-plus 125 | **0300013** | Aluminum | 1 |
| SBR-plus 125 | **0300023** | 16 MnCr 5 | 1 |

You can find more detailed information and individual parts of the above-mentioned accessories in the “Accessories” catalog section.

## Tolerance compensation unit

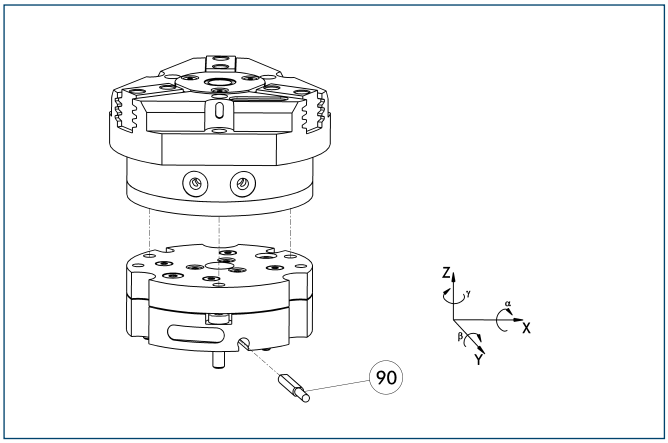


(90) Monitoring of locking

Grippers can be directly mounted without an adapter plate. Tolerance compensation unit and gripper have an identical screw connection diagram. Therefore the tolerance compensation units can be assembled later. Please consider the additional assembly height of the tolerance compensation unit. For details see catalog “Robot Accessories”.

| Description | ID | Locking | Deflection |
|---|---|---|---|
| Compensation unit | | | |
| TCU-160-3-MV-Z | **0324838** | Yes | |
| TCU-160-3-OV-Z | **0324839** | No | |

## Programmable magnetic switch

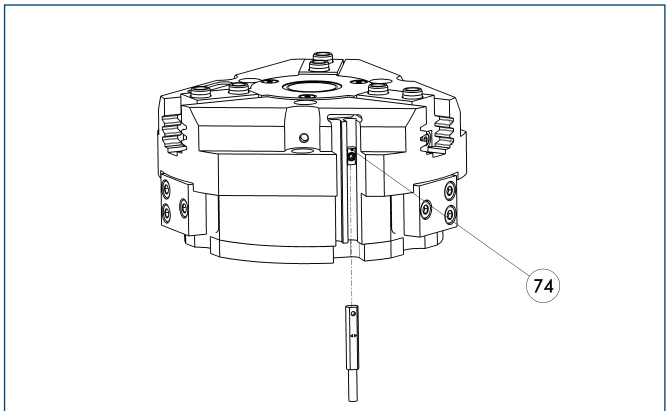


(74) Stop for MMS-P

Position monitoring with two programmable positions per sensor. The end position monitoring is mounted in the C-slot.

| Description | ID | Recommended product |
|---|---|---|
| Programmable magnetic switch | | |
| MMS-P 22-S-M8-PNP | **0301370** | • |
| MMSK-P 22-S-PNP | **0301371** | |
| Connection cables | | |
| KA BG08-L 4P-0500 | **0307767** | |
| KA BG08-L 4P-1000 | **0307768** | |
| KA BW08-L 4P-0500 | **0307765** | |
| KA BW08-L 4P-1000 | **0307766** | |
| Sensor Distributor | | |
| V2-M8-4P-2XM8-3P | **0301380** | |

ⓘ Please note the minimum permitted bending radii for the sensor cables, which are generally 35 mm.

ⓘ Per gripper one sensor (closer/NO) is required, optionally a cable extension.

You can find more detailed information and individual parts of the above-mentioned accessories in the “Accessories” catalog section.

## Electronic magnetic switches

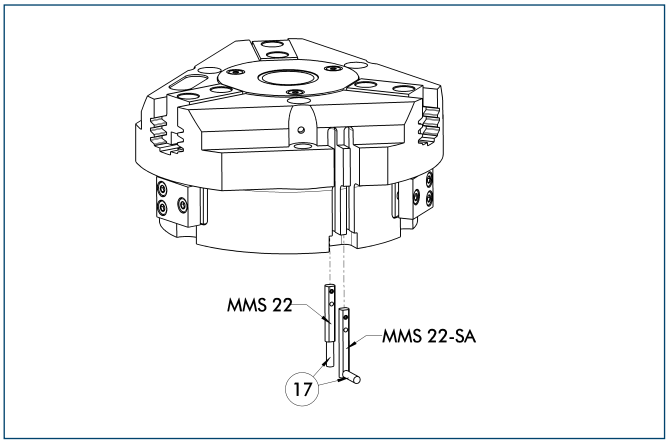


⑰ Cable outlet

End position monitoring for mounting in the C-slot

| Description | ID | Recommended product |
|---|---|---|
| Electronic magnetic switches | | |
| MMS 22-S-M5-PNP | **0301438** | |
| MMS 22-S-M5-NPN | **0301439** | |
| MMS 22-S-M8-PNP | **0301432** | • |
| MMS 22-S-M8-NPN | **0301433** | |
| MMSK 22-S-PNP | **0301434** | |
| MMSK 22-S-NPN | **0301435** | |
| Electronic magnetic switches with lateral cable outlet | | |
| MMS 22-S-M5-PNP-SA | **0301448** | |
| MMS 22-S-M5-NPN-SA | **0301449** | |
| MMS 22-S-M8-PNP-SA | **0301442** | • |
| MMS 22-S-M8-NPN-SA | **0301443** | |
| MMSK 22-S-PNP-SA | **0301444** | |
| MMSK 22-S-NPN-SA | **0301445** | |
| Reed Switches | | |
| RMS 22-S-M8 | **0377720** | • |
| Connection cables | | |
| KA BG05-L 3P-0300 | **0301652** | |
| KA BG08-L 3P-0300-PNP | **0301622** | |
| KA BG08-L 3P-0500-PNP | **0301623** | |
| KA BW05-L 3P-0300 | **0301650** | |
| KA BW08-L 3P-0300-NPN | **0301602** | |
| KA BW08-L 3P-0300-PNP | **0301594** | |
| KA BW08-L 3P-0500-NPN | **9641116** | |
| KA BW08-L 3P-0500-PNP | **0301502** | |
| Cable extensions | | |
| KV BW08-SG08 3P-0030-PNP | **0301495** | |
| KV BW08-SG08 3P-0100-PNP | **0301496** | |
| KV BW08-SG08 3P-0200-PNP | **0301497** | |

ⓘ Please note the minimum permitted bending radii for the sensor cables, which are generally 35 mm.

## Inductive proximity switches

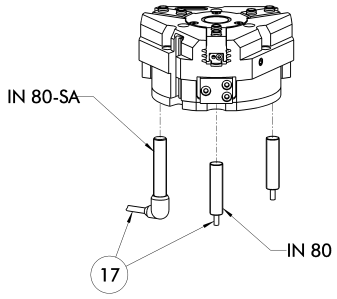


⑰ Cable outlet

| Description | ID | Recommended product |
|---|---|---|
| Inductive proximity switches | | |
| IN 80-S-M8 | **0301478** | • |
| IN 80-S-M12 | **0301578** | |
| INK 80-S | **0301550** | |
| Inductive proximity switch with lateral outlet | | |
| IN 80-S-M12-SA | **0301587** | |
| IN 80-S-M8-SA | **0301483** | • |
| INK 80-S-SA | **0301566** | |
| Connection cables | | |
| KA BG08-L 3P-0300-PNP | **0301622** | |
| KA BG08-L 3P-0500-PNP | **0301623** | |
| KA BG12-L 3P-0500-PNP | **30016369** | |
| KA BW08-L 3P-0300-PNP | **0301594** | |
| KA BW08-L 3P-0500-PNP | **0301502** | |
| KA BW12-L 3P-0300-PNP | **0301503** | |
| KA BW12-L 3P-0500-PNP | **0301507** | |
| Cable extensions | | |
| KV BG12-SG12 3P-0030-PNP | **0301999** | |
| KV BG12-SG12 3P-0060-PNP | **0301998** | |
| KV BW08-SG08 3P-0030-PNP | **0301495** | |
| KV BW08-SG08 3P-0100-PNP | **0301496** | |
| KV BW08-SG08 3P-0200-PNP | **0301497** | |
| KV BW12-SG12 3P-0030-PNP | **0301595** | |
| KV BW12-SG12 3P-0100-PNP | **0301596** | |
| KV BW12-SG12 3P-0200-PNP | **0301597** | |

ⓘ Please note the minimum permitted bending radii for the sensor cables, which are generally 35 mm.

You can find more detailed information and individual parts of the above-mentioned accessories in the “Accessories” catalog section.

## Cylindrical Reed Switches

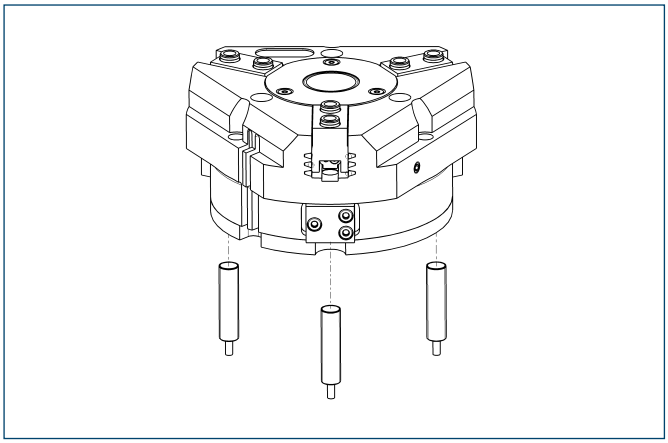

End position monitoring mounted with mounting kit

| Description | ID |
|---|---|
| Mounting kit for proximity switch | |
| AS-RMS 80<br>PGN/PZN-plus 100/125 | **0377726** |
| Reed Switches | |
| RMS 80-S-M8 | **0377721** |

ⓘ This mounting kit needs to be ordered optionally as an accessory.

ⓘ Please note the minimum permitted bending radii for the sensor cables, which are generally 35 mm.

## Analog position sensor

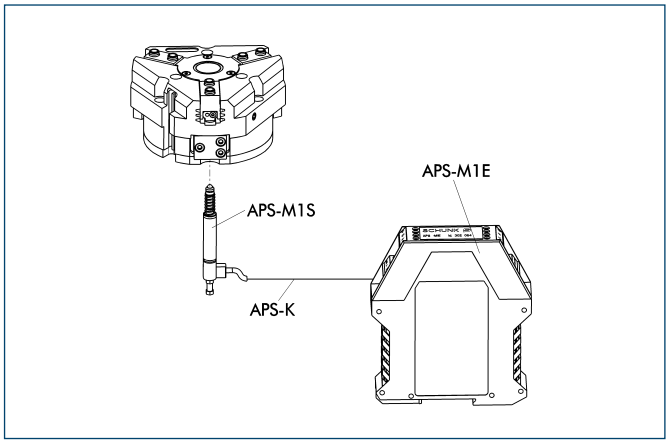


Analog multi position monitoring for any desired positions

| Description | ID |
|---|---|
| Mounting kit | |
| AS-APS-M1-125/1 | **0302081** |
| Connection cables | |
| APS-K0200 | **0302066** |
| APS-K0700 | **0302068** |
| Electronic Processor | |
| APS-M1E | **0302064** |
| Sensor | |
| APS-M1S | **0302062** |

ⓘ When using an APS system, for each gripper a mounting kit (AS-APS), an APS sensor (APS-M 1S, incl. 3 m cable) as well as an electronics (APS-M1e) are required.

ⓘ An extension cable (APS-K) can be connected between the sensor and the electronics as an option. The max. cable length between the sensor and the electronics is 10 m, between the electronics and their control unit (PLC) it is max. 1 m.

You can find more detailed information and individual parts of the above-mentioned accessories in the “Accessories” catalog section.

## Flexible Position Sensor

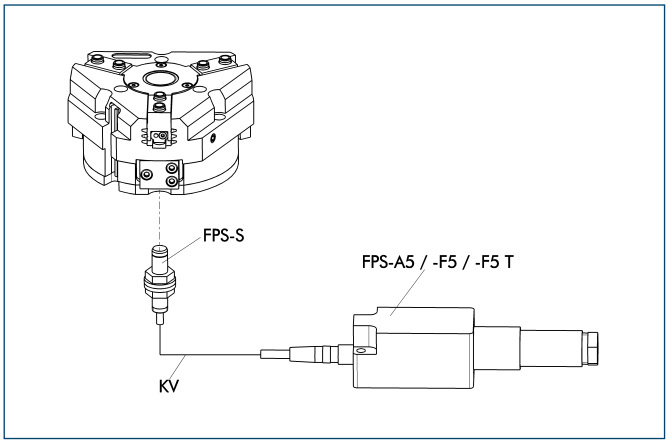


Flexible position monitoring of up to five positions

| Description | ID |
|---|---|
| Mounting kit for FPS | |
| AS-PGN/PZN-plus 125/1, PZB 160 | **0301636** |
| Electronic Processor | |
| FPS-F5 | **0301805** |
| FPS-F5 T | **0301807** |
| Sensor | |
| FPS-S M8 | **0301704** |

ⓘ When using a FPS system, a FPS sensor (FPS-S) and a control unit (FPS-F5 / F5 T or A5) are required for each gripper as well as a mounting kit (AS), if listed. Cable extensions (KV) are available as options in the “Accessories” catalog section.

You can find more detailed information and individual parts of the above-mentioned accessories in the “Accessories” catalog section.

# DPZ-plus

**Pneumatic • 3-Finger Centric Gripper • Sealed Gripper**

**Sizes**
40 ... 200

**Weight**
0.2 kg ... 20.1 kg

**Gripping force**
230 N ... 16500 N

**Stroke per finger**
2 mm ... 25 mm

**Workpiece weight**
1.15 kg ... 60 kg

## Application example

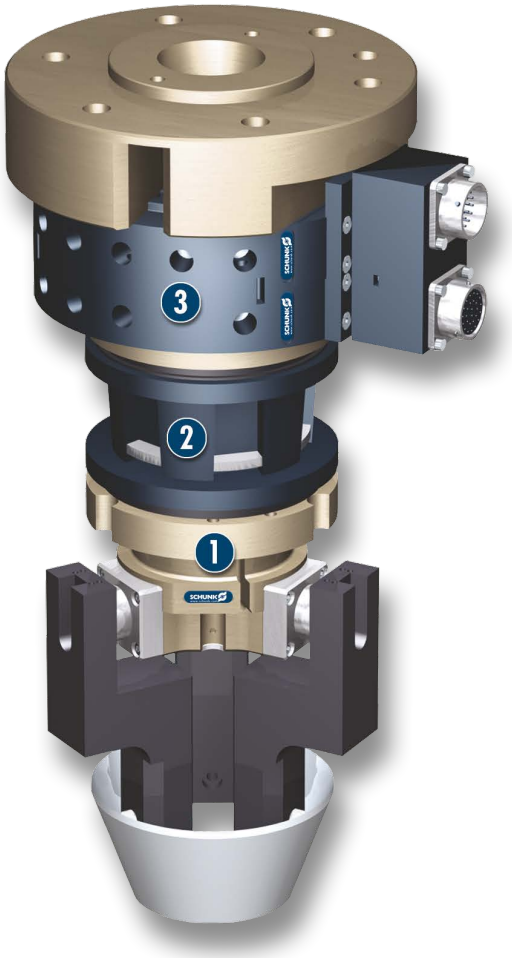


Insertion tool for assembly of small to medium-sized workpieces. The tool can be used in both clean and dirty environments. Thanks to its quick-change system, other tools can alternately be fixed to the robot flange.

1. 3-Finger Centric Gripper DPZ-plus
2. Insertion Unit FUS
3. SWS Quick-change System

## Sealed Gripper

Despite the high moment load of the base jaws, this sealed 3-finger concentric gripper satisfies the requirements of IP67 and does not permit any substances from the working environment to penetrate the interior of the component.

## Field of application

The DPZ-plus is ideally suitable for handling of rough or dirty workpieces. Its field of application extends from the loading and unloading of machines, such as in the case of sanitary blocks, grinding machines, lathes or milling machines, to handling tasks in painting plants, in powder-processing or underwater.

## Your advantages and benefits

**Robust interior multi-tooth guidance**
for the precise handling of all kinds of workpieces

**Lip seal at the outside round guidance**
for permanent, secure gripper sealing

**High maximum moments possible**
suitable for using long gripper fingers

**Sealed 3-Finger Concentric Gripper**
complies to IP67 requirements despite a high moment load

**Mounting from two sides in three screw directions possible**
for universal and flexible gripper assembly

**Maximum gripping forces despite a compact design**
for a wide range of applications

**Air supply via hose-free direct connection or screw connections**
for the flexible supply of compressed air in all automation systems

**Compact dimensions**
for minimal interfering contours in handling







## General note to the series

**Principle of function**
Wedge-hook kinematics

**Housing material**
Aluminum alloy, hard-anodized

**Base jaw material**
Steel

**Actuation**
pneumatic, with filtered compressed air (10 microns): dry, lubricated or non-lubricated
Pressure medium: Required quality class of compressed air according to DIN ISO 8573-1: 6 4 4

**Warranty**
36 months (details, general terms and conditions and operation manuals can be downloaded under www.schunk.com)

**Scope of delivery**
Centering sleeves, centering pins, O-rings for direct connection, assembly and operating manual with manufacturer's declaration

**Gripping force maintenance device**
with either mechanical gripping force maintenance or SDV-P pressure maintenance valve

## Sectional diagram

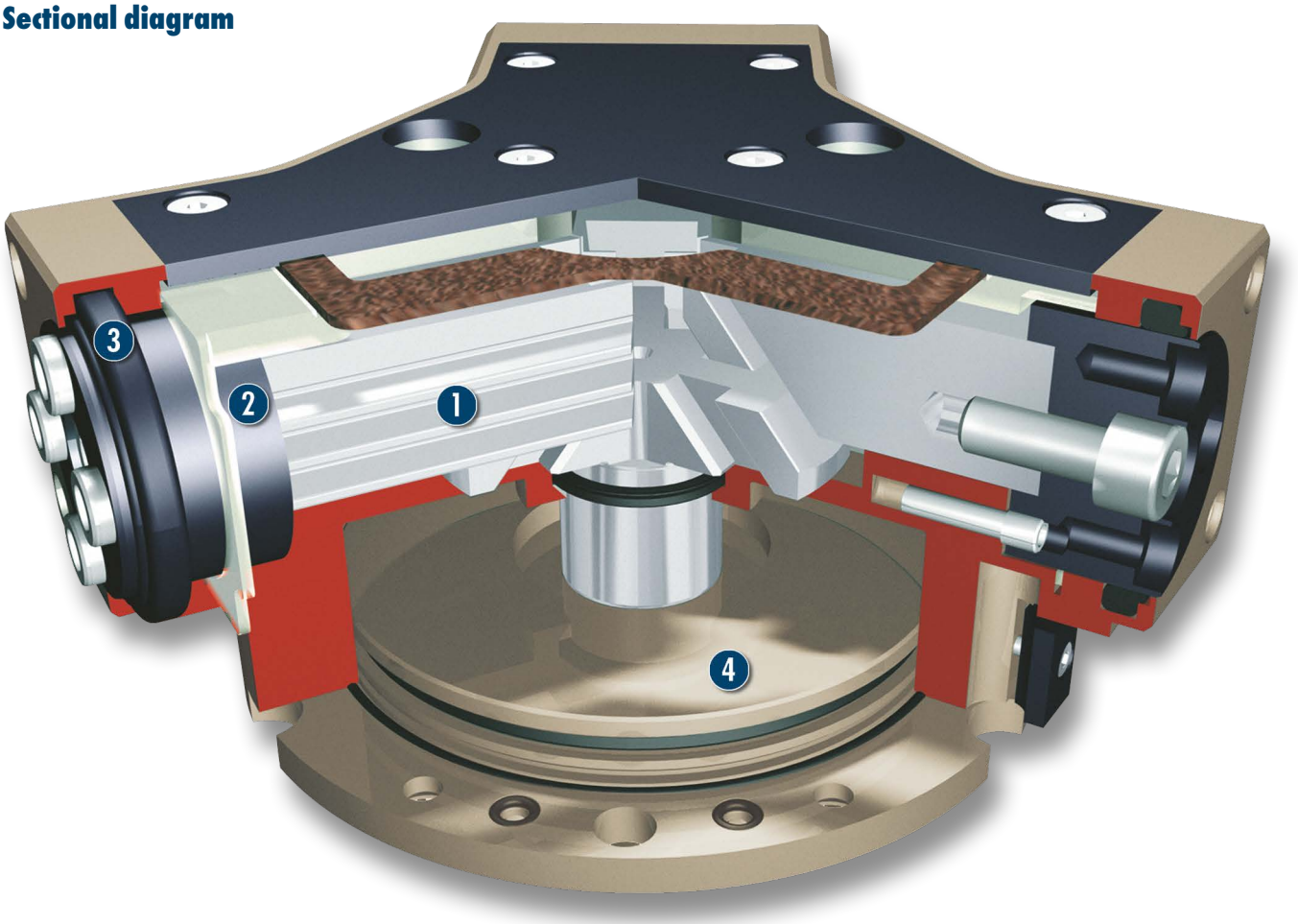


**1** **Inner base jaw with multi-tooth guidance**
for high moment loads

**2** **External round base jaw**
providing a sealable, round surface

**3** **Lip seal**
for permanent, secure gripper sealing

**4** **Round piston with rod and wedge hook**
for power generation

## Functional description

The piston is moved up and down by compressed air.
Through its angled active surfaces, the wedge hook transforms this movement into the lateral, synchronous gripping movement of both base jaws.

## Options and special information

Please note that an additional hose for deaeration or air purge is essential for the gripper, i.e. it requires three hoses in total. See the assembly and operating manual for detailed information.

**Force intensified version**
if higher gripping forces are required

## Accessories

Accessories from SCHUNK – the suitable supplement for maximum functionality, reliability and performance of all automation modules.

### Centering sleeves



### Fittings



### Sensor system



### Sensor cables



### Quick-change Jaw System





### Sensor Distributor

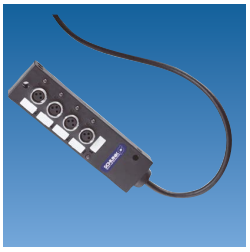

### Plastic inserts



### Pressure maintenance valve



### Gripper pads

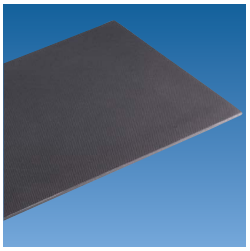

### Finger blanks



### Universal intermediate jaw



### Compensation unit



### Tolerance compensation unit



ⓘ For the exact size of the required accessories, availability of this size and the designation and ID, please refer to the additional views at the end of the size in question. You will find more detailed information on our accessory range in the “Accessories” catalog section.

## General note to the series

**Gripping force**
is the arithmetic total of the gripping force applied to each finger at distance P (see illustration) measured from the upper edge of the gripper.

**Finger length**
The finger length is measured from the upper edge of the gripper housing in the direction of the main axis.

**Repeat accuracy**
is defined as the spread of the limit position after 100 consecutive strokes.

**Workpiece weight**
The recommended workpiece weight is calculated for a force-type connection with a coefficient of friction of 0.1 and a safety factor of 2 against slippage of the workpiece on acceleration due to gravity g. Considerably heavier workpiece weights are permitted with form-fit gripping.

**Closing and opening times**
Closing and opening times are purely the times that the base jaws or fingers are in motion. Valve switching times, hose filling times or PLC reaction times are not included in the above times and must be taken into consideration when determining cycle times.

# DPZ-plus 40

**Pneumatic • 3-Finger Centric Gripper • Sealed Gripper**

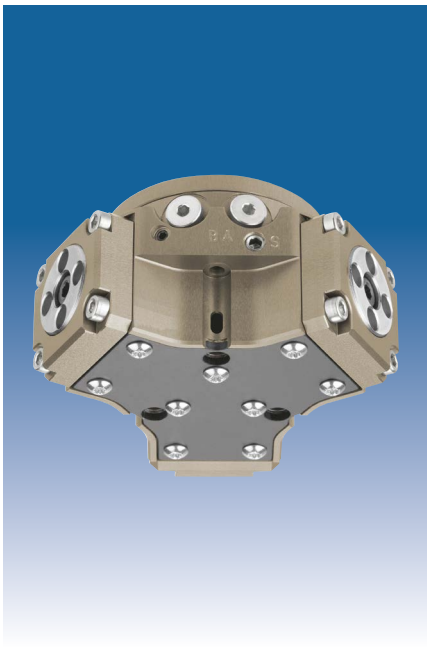

## Gripping force, I.D. gripping

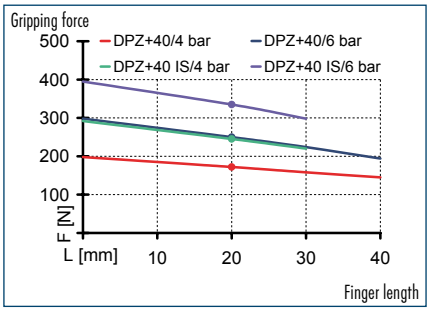


## Gripping force, O.D. gripping

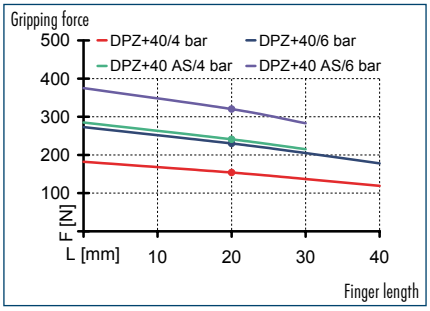


## Finger load

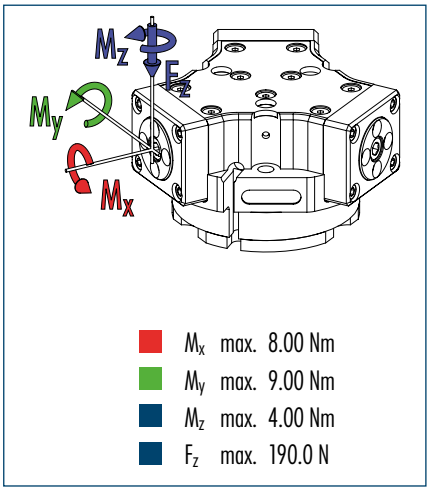


ⓘ The indicated moments and forces are static values, apply per base jaw and may occur simultaneously. $M_y$ may arise in addition to the moment generated by the gripping force itself. If the max. permitted finger weight is exceeded, it is imperative to throttle the air pressure so that the jaw movement occurs without any hitting or bouncing. Service life may be reduced.

## Technical data

| Description | | DPZ-plus 40 | DPZ-plus 40-AS | DPZ-plus 40-IS |
|---|---|---|---|---|
| **ID** | | **0304501** | **0304503** | **0304505** |
| Stroke per finger | [mm] | 2.5 | 2.5 | 2.5 |
| Closing force | [N] | 230 | 320 | |
| Opening force | [N] | 250 | | 355 |
| Min. spring force | [N] | | 90 | 105 |
| Weight | [kg] | 0.2 | 0.25 | 0.25 |
| Recommended workpiece weight | [kg] | 1.15 | 1.15 | 1.15 |
| Air consumption per double stroke | [cm³] | 5 | 9 | 9 |
| Min./max. operating pressure | [bar] | 2.5/8 | 4/6.5 | 4/6.5 |
| Nominal operating pressure | [bar] | 6 | 6 | 6 |
| Closing/opening time | [s] | 0.03/0.03 | 0.03/0.05 | 0.03/0.05 |
| Max. permitted finger length | [mm] | 40 | 30 | 30 |
| Max. permitted weight per finger | [kg] | 0.1 | 0.1 | 0.1 |
| IP class | | 67 | 67 | 67 |
| Min./max. ambient temperature | [°C] | -10/90 | -10/90 | -10/90 |
| Repeat accuracy | [mm] | 0.01 | 0.01 | 0.01 |
| Cleanroom class ISO-classification 14644-1 | | 5 | 5 | 5 |

## Main view

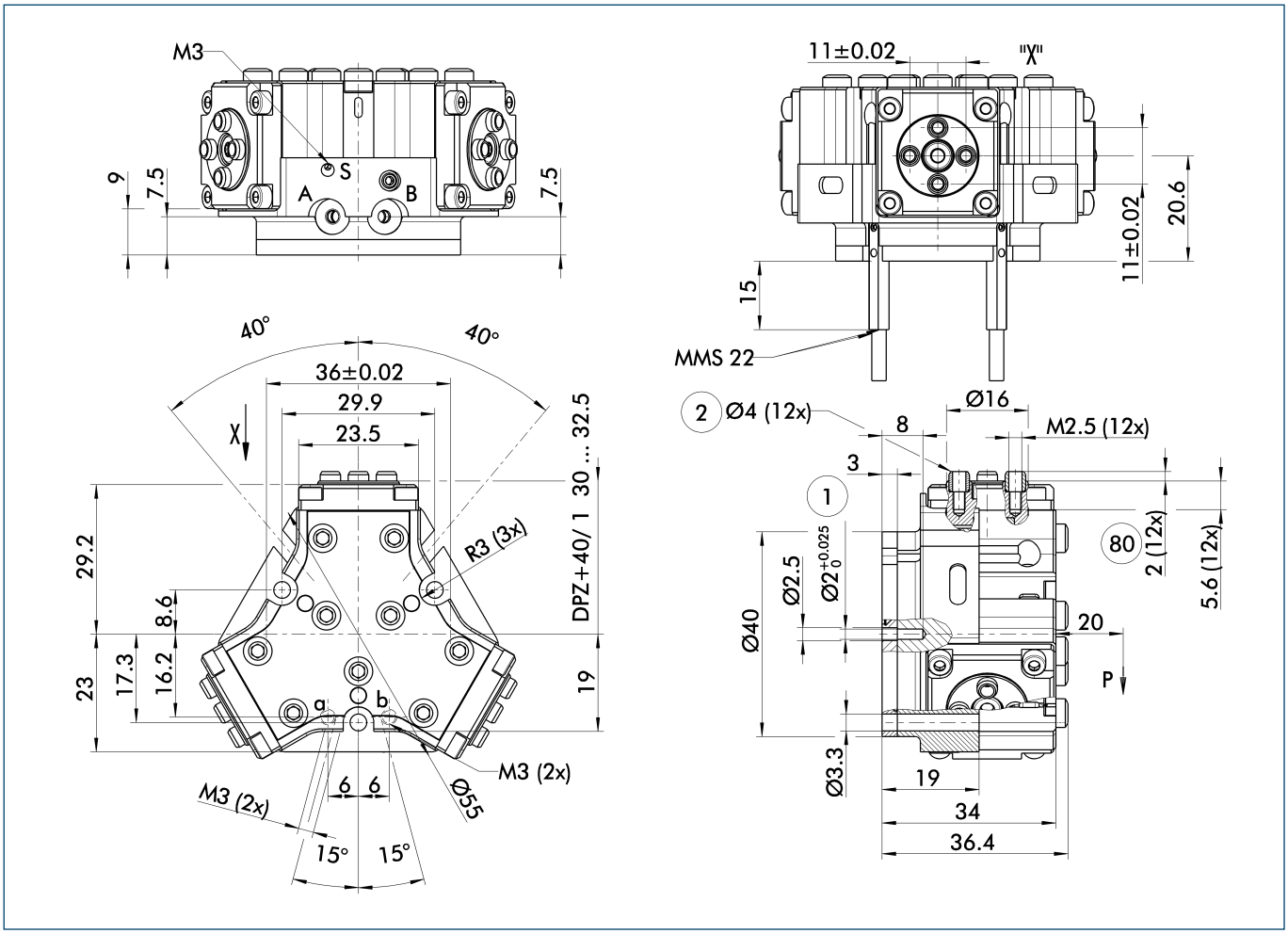


The drawing shows the gripper in the basic version with closed jaws, the dimensions do not include the options described below.

ⓘ The SDV-P pressure maintenance valve can also be used for I.D. or O.D. gripping alternatively or in addition to the spring-loaded, mechanical gripping force maintenance device (see "Accessories" catalog section).

A, a Main/direct connection, gripper opening
B, b Main/direct connection, gripper closing
S Air purge connection
① Gripper connection
② Finger connection
80 Depth of the centering sleeve hole in the matching part

## Hose-free direct connection

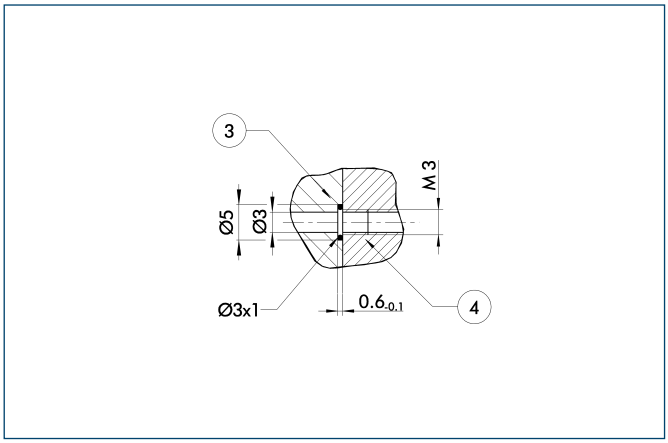


③ Adapter
④ Gripper

The direct connection is used for supplying compressed air without hoses. Instead, the pressure medium is fed through bore-holes in the mounting plate.

## AS/IS gripping force maintenance device

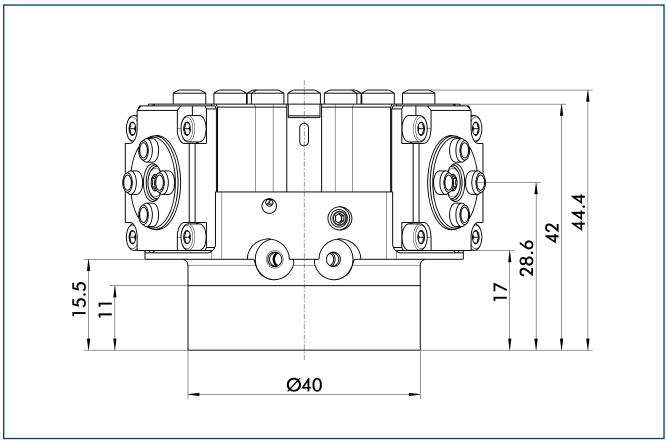


The mechanical gripping force maintenance device ensures a minimum gripping force even in case of pressure drop. This acts as closing force in the AS version, and as opening force in the IS version. In addition, the gripping force maintenance device can also be used for increasing the gripping force or for single-acting gripping.

## Proposed jaw design

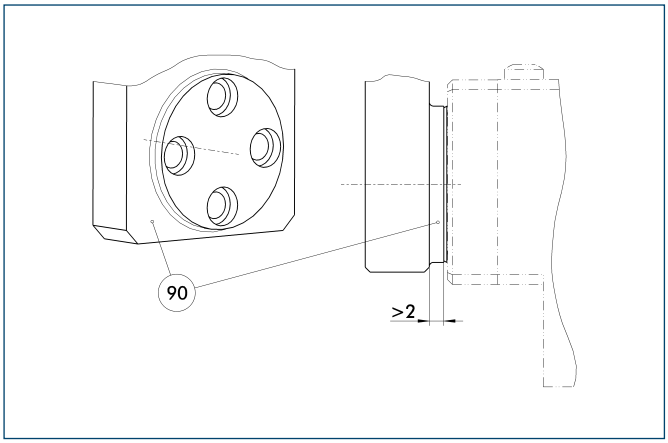


(90) Step

In order to avoid impairment of the stroke due to contamination or chips, there should be a sufficient distance between the top jaws and the gripper.

## Spring-loaded pressure piece

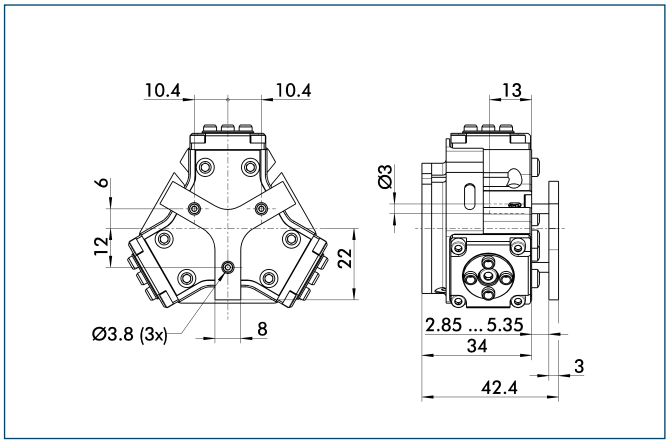


For spring-supported positioning of the workpiece against a stop after the gripper has opened. Especially developed for loading machines.

| Description | ID | Stroke | Min. force |
|---|---|---|---|
| Spring-loaded pressure piece | | | |
| A-DPZ-plus 40 | **0303730** | 2.5 mm | 11 N |

## Compensation unit with spring reset

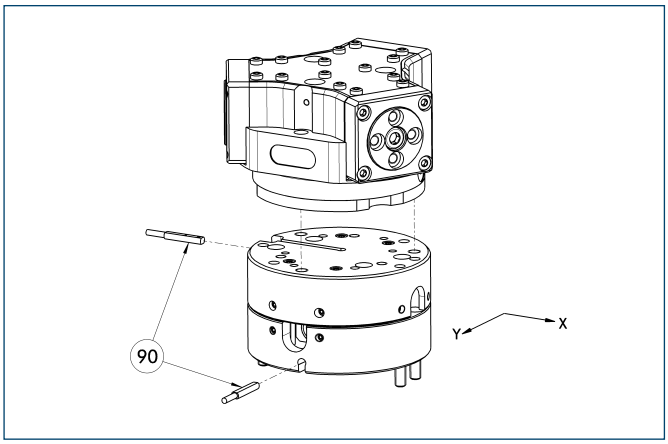


(90) Monitoring

Grippers can be directly mounted without using an adapter plate. For details see our catalog “Robot Accessories”.

| Description | ID | Compensation travel | Reset force |
|---|---|---|---|
| Compensation unit | | | |
| AGE-F-XY-031-1 | **0324900** | ±1.5 mm | 1 N |
| AGE-F-XY-031-2 | **0324901** | ±1.5 mm | 2.5 N |
| AGE-F-XY-031-3 | **0324902** | ±1.5 mm | 3.3 kN |

## Programmable magnetic switch

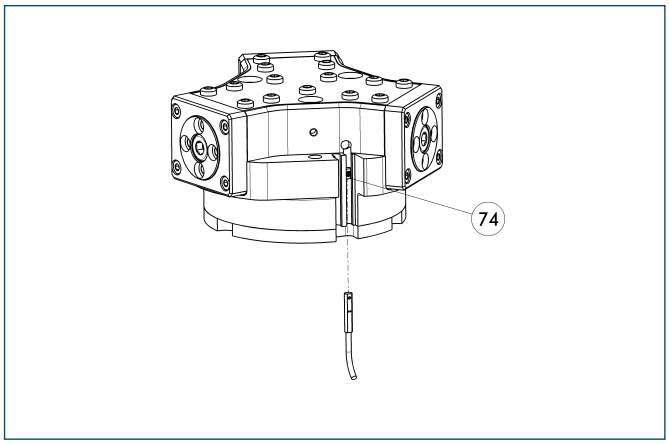


(74) Stop for MMS-P

Position monitoring with two programmable positions per sensor. The end position monitoring is mounted in the C-slot.

| Description | ID | Recommended product |
|---|---|---|
| Programmable magnetic switch | | |
| MMS-P 22-S-M8-PNP | **0301370** | • |
| MMSK-P 22-S-PNP | **0301371** | |
| Connection cables | | |
| KA BG08-L 4P-0500 | **0307767** | |
| KA BG08-L 4P-1000 | **0307768** | |
| KA BW08-L 4P-0500 | **0307765** | |
| KA BW08-L 4P-1000 | **0307766** | |
| Sensor Distributor | | |
| V2-M8-4P-2XM8-3P | **0301380** | |

ⓘ Please note the minimum permitted bending radii for the sensor cables, which are generally 35 mm.

ⓘ Per gripper one sensor (closer/NO) is required, optionally a cable extension.

You can find more detailed information and individual parts of the above-mentioned accessories in the “Accessories” catalog section.

## Electronic magnetic switches

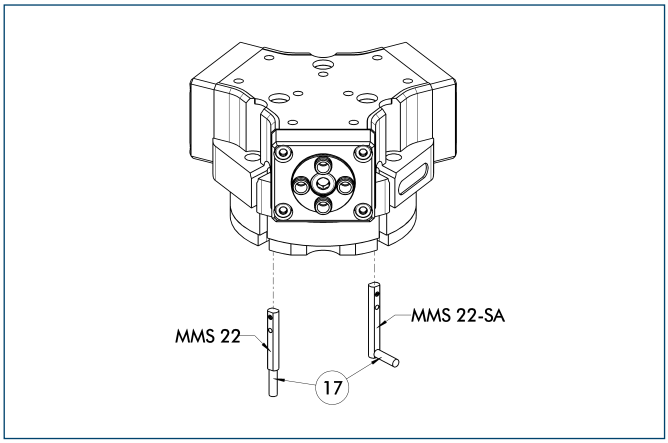


⑰ Cable outlet

End position monitoring for mounting in the C-slot

| Description | ID | Recommended product |
|---|---|---|
| Electronic magnetic switches | | |
| MMS 22-S-M5-PNP | **0301438** | |
| MMS 22-S-M5-NPN | **0301439** | |
| MMS 22-S-M8-PNP | **0301432** | • |
| MMS 22-S-M8-NPN | **0301433** | |
| MMSK 22-S-PNP | **0301434** | |
| MMSK 22-S-NPN | **0301435** | |
| Electronic magnetic switches with lateral cable outlet | | |
| MMS 22-S-M5-PNP-SA | **0301448** | |
| MMS 22-S-M5-NPN-SA | **0301449** | |
| MMS 22-S-M8-PNP-SA | **0301442** | • |
| MMS 22-S-M8-NPN-SA | **0301443** | |
| MMSK 22-S-PNP-SA | **0301444** | |
| MMSK 22-S-NPN-SA | **0301445** | |
| Connection cables | | |
| KA BG05-L 3P-0300 | **0301652** | |
| KA BG08-L 3P-0300-PNP | **0301622** | |
| KA BG08-L 3P-0500-PNP | **0301623** | |
| KA BW05-L 3P-0300 | **0301650** | |
| KA BW08-L 3P-0300-NPN | **0301602** | |
| KA BW08-L 3P-0300-PNP | **0301594** | |
| KA BW08-L 3P-0500-NPN | **9641116** | |
| KA BW08-L 3P-0500-PNP | **0301502** | |
| Cable extensions | | |
| KV BW08-SG08 3P-0030-PNP | **0301495** | |
| KV BW08-SG08 3P-0100-PNP | **0301496** | |
| KV BW08-SG08 3P-0200-PNP | **0301497** | |

ⓘ Two sensors (closer/NO) are required for each gripper, plus extension cables as an option.

ⓘ Please note the minimum permitted bending radii for the sensor cables, which are generally 35 mm.

You can find more detailed information and individual parts of the above-mentioned accessories in the “Accessories” catalog section.

# DPZ-plus 50

**Pneumatic • 3-Finger Centric Gripper • Sealed Gripper**

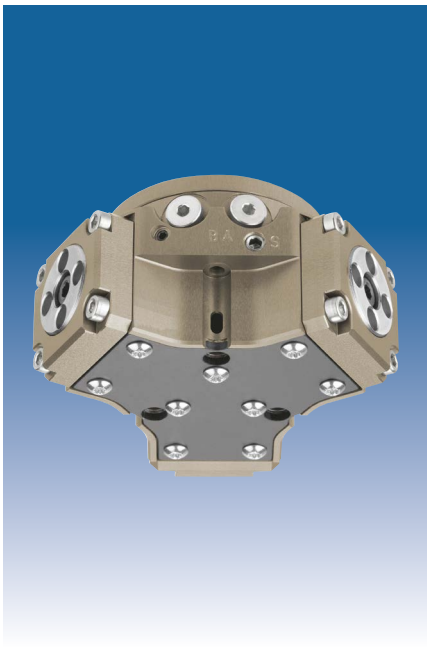

## Gripping force, I.D. gripping

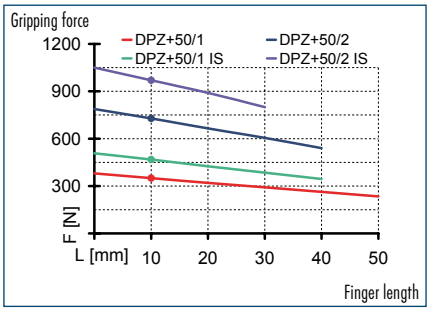


## Gripping force, O.D. gripping

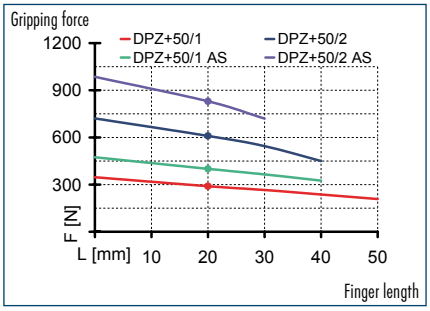


## Finger load

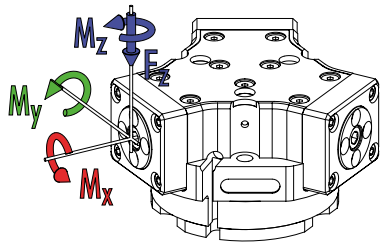


- $M_x$ max. 15.00 Nm
- $M_y$ max. 19.00 Nm
- $M_z$ max. 8.00 Nm
- $F_z$ max. 375.0 N

ⓘ The indicated moments and forces are static values, apply per base jaw and may occur simultaneously. $M_y$ may arise in addition to the moment generated by the gripping force itself. If the max. permitted finger weight is exceeded, it is imperative to throttle the air pressure so that the jaw movement occurs without any hitting or bouncing. Service life may be reduced.

## Technical data

| Description | | DPZ-plus 50-1 | DPZ-plus 50-2 | DPZ-plus 50-1-AS | DPZ-plus 50-2-AS | DPZ-plus 50-1-IS | DPZ-plus 50-2-IS |
|---|---|---|---|---|---|---|---|
| **ID** | | **0304401** | **0304402** | **0304403** | **0304404** | **0304405** | **0304406** |
| Stroke per finger | [mm] | 4 | 2 | 4 | 2 | 4 | 2 |
| Closing force | [N] | 290 | 610 | 400 | 830 | | |
| Opening force | [N] | 320 | 665 | | | 455 | 945 |
| Min. spring force | [N] | | | 110 | 220 | 135 | 280 |
| Weight | [kg] | 0.37 | 0.37 | 0.45 | 0.45 | 0.45 | 0.45 |
| Recommended workpiece weight | [kg] | 1.45 | 3.06 | 1.45 | 3.06 | 1.45 | 3.06 |
| Air consumption per double stroke | [cm³] | 9 | 9 | 18 | 18 | 18 | 18 |
| Min./max. operating pressure | [bar] | 2.5/8 | 2.5/8 | 4/6.5 | 4/6.5 | 4/6.5 | 4/6.5 |
| Nominal operating pressure | [bar] | 6 | 6 | 6 | 6 | 6 | 6 |
| Closing/opening time | [s] | 0.03/0.03 | 0.03/0.03 | 0.03/0.05 | 0.03/0.05 | 0.05/0.03 | 0.05/0.03 |
| Max. permitted finger length | [mm] | 50 | 40 | 40 | 30 | 40 | 30 |
| Max. permitted weight per finger | [kg] | 0.15 | 0.15 | 0.15 | 0.15 | 0.15 | 0.15 |
| IP class | | 67 | 67 | 67 | 67 | 67 | 67 |
| Min./max. ambient temperature | [°C] | -10/90 | -10/90 | -10/90 | -10/90 | -10/90 | -10/90 |
| Repeat accuracy | [mm] | 0.01 | 0.01 | 0.01 | 0.01 | 0.01 | 0.01 |
| Cleanroom class ISO-classification 14644-1 | | 5 | 5 | 5 | 5 | 5 | 5 |

## Main view

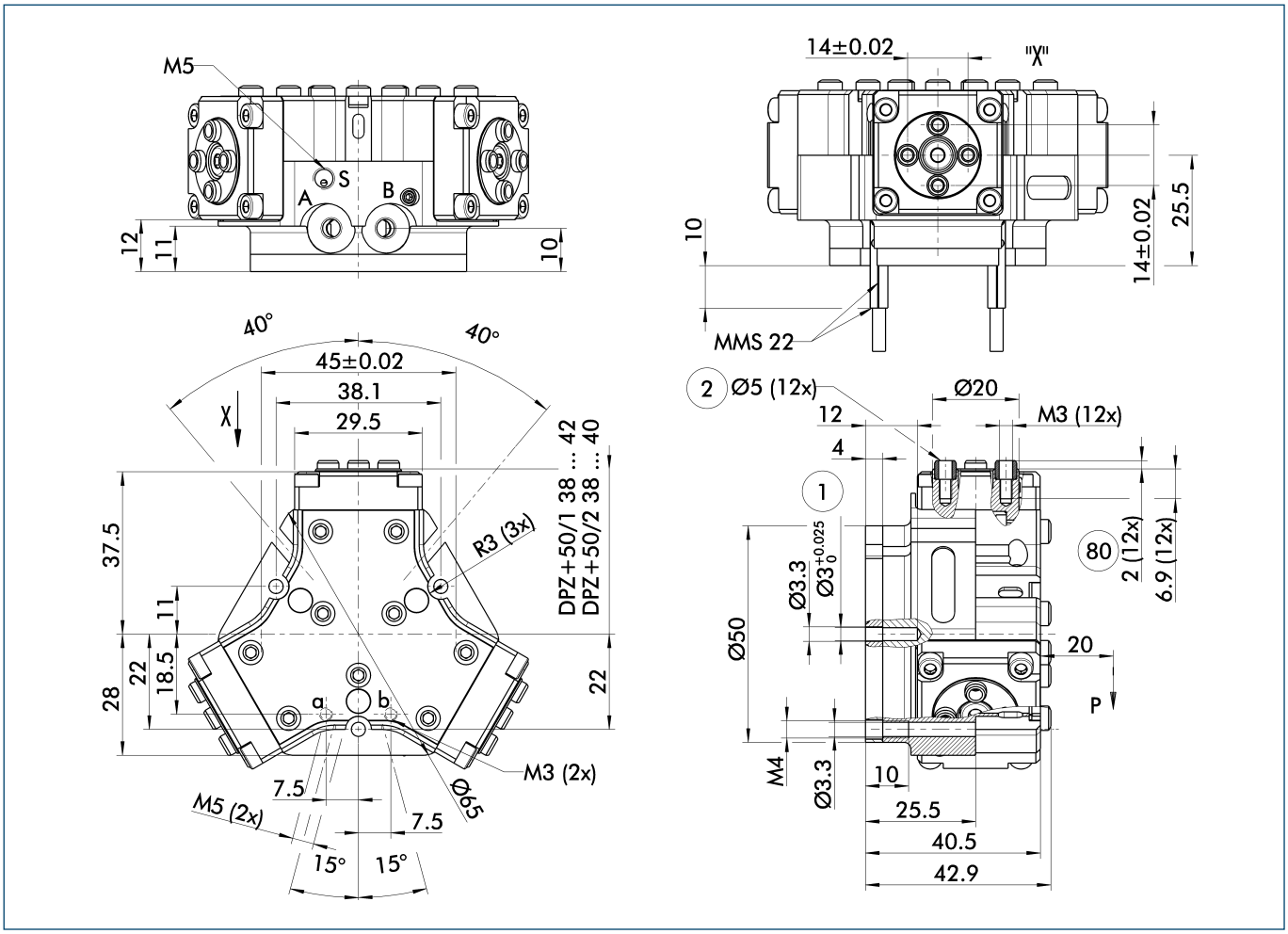


The drawing shows the gripper in the basic version with closed jaws, the dimensions do not include the options described below.

ⓘ The SDV-P pressure maintenance valve can also be used for I.D. or O.D. gripping alternatively or in addition to the spring-loaded, mechanical gripping force maintenance device (see "Accessories" catalog section).

A, a Main/direct connection, gripper opening
B, b Main/direct connection, gripper closing
S Air purge connection
① Gripper connection
② Finger connection
80 Depth of the centering sleeve hole in the matching part

## Hose-free direct connection

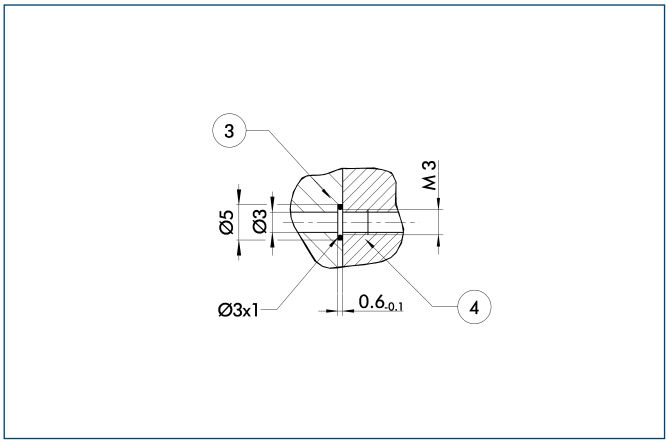


③ Adapter
④ Gripper

The direct connection is used for supplying compressed air without hoses. Instead, the pressure medium is fed through bore-holes in the mounting plate.

## AS/IS gripping force maintenance device

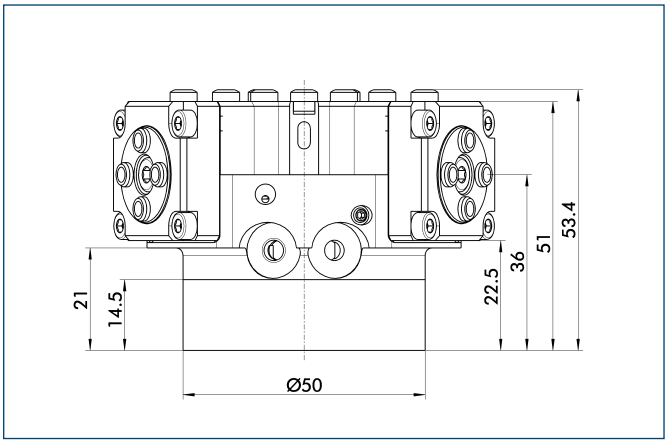


The mechanical gripping force maintenance device ensures a minimum gripping force even in case of pressure drop. This acts as closing force in the AS version, and as opening force in the IS version. In addition, the gripping force maintenance device can also be used for increasing the gripping force or for single-acting gripping.

## Proposed jaw design

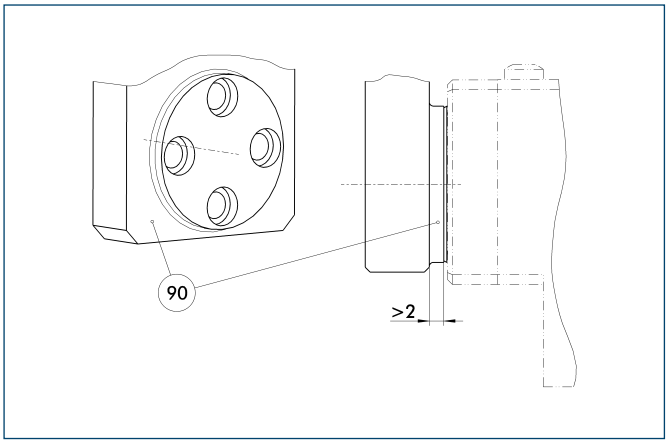


(90) Step

In order to avoid impairment of the stroke due to contamination or chips, there should be a sufficient distance between the top jaws and the gripper.

## Spring-loaded pressure piece

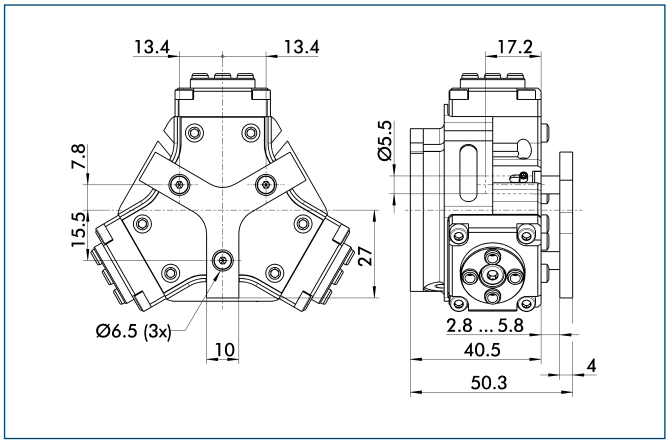


For spring-supported positioning of the workpiece against a stop after the gripper has opened. Especially developed for loading machines.

| Description | ID | Stroke | Min. force |
|---|---|---|---|
| Spring-loaded pressure piece | | | |
| A-DPZ-plus 50 | **0303731** | 3 mm | 18 N |

## Intermediate Jaws

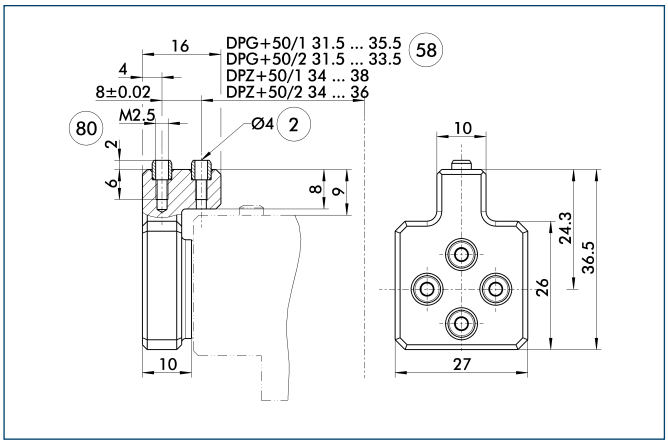


(2) Finger connection
(58) Distance from center of gripper
(80) Depth of the centering sleeve hole in the matching part

Optionally intermediate jaws can be used, enabling direct connection and alignment of top jaws and various standard accessories in Z-direction.

| Description | ID | Material | Scope of delivery |
|---|---|---|---|
| Intermediate Jaws | | | |
| ZBA-DPG-DPZ+50 | **0300191** | Aluminum | 1 |

## Tolerance compensation unit

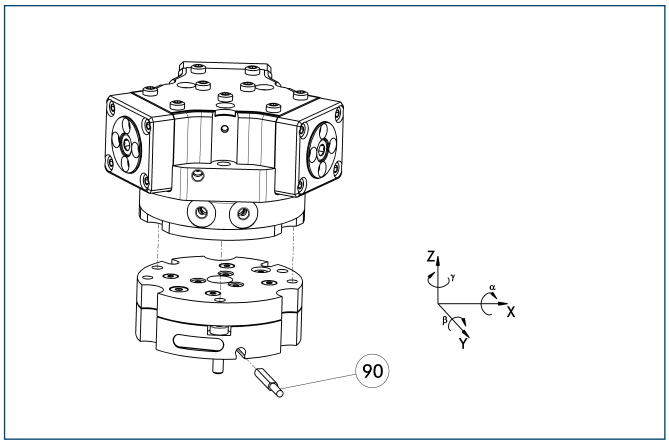


(90) Monitoring of locking

Grippers can be directly mounted without an adapter plate. Tolerance compensation unit and gripper have an identical screw connection diagram. Therefore the tolerance compensation units can be assembled later. Please consider the additional assembly height of the tolerance compensation unit. For details see catalog “Robot Accessories”.

| Description | ID | Locking | Deflection |
|---|---|---|---|
| Compensation unit | | | |
| TCU-050-3-OV-Z | **0324749** | No | |

You can find more detailed information and individual parts of the above-mentioned accessories in the “Accessories” catalog section.

## Compensation unit with spring reset

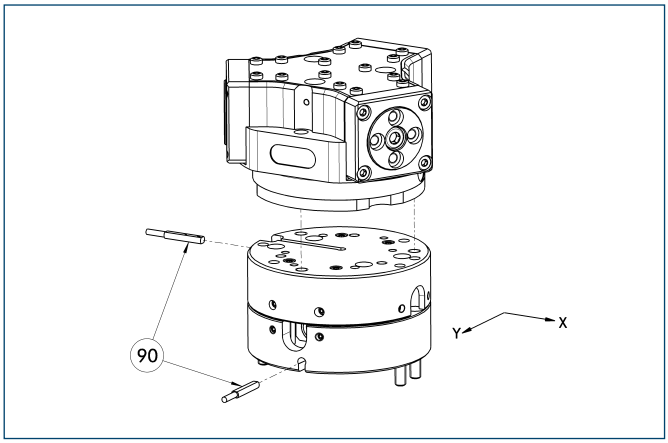


(90) Monitoring

Grippers can be directly mounted without using an adapter plate. For details see our catalog “Robot Accessories”.

| Description | ID | Compensation travel | Reset force |
|---|---|---|---|
| Compensation unit | | | |
| AGE-F-XY-040-1 | **0324920** | ±2 mm | 1 N |
| AGE-F-XY-040-2 | **0324921** | ±2 mm | 2.5 N |
| AGE-F-XY-040-3 | **0324922** | ±2 mm | 3.3 N |

## Programmable magnetic switch

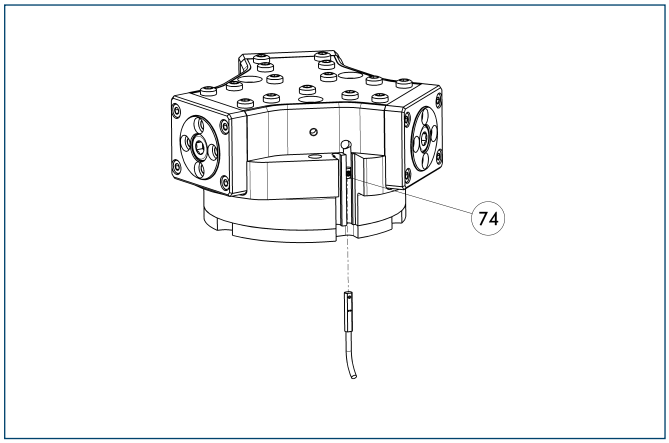


(74) Stop for MMS-P

Position monitoring with two programmable positions per sensor. The end position monitoring is mounted in the C-slot.

| Description | ID | Recommended product |
|---|---|---|
| Programmable magnetic switch | | |
| MMS-P 22-S-M8-PNP | **0301370** | • |
| MMSK-P 22-S-PNP | **0301371** | |
| Connection cables | | |
| KA BG08-L 4P-0500 | **0307767** | |
| KA BG08-L 4P-1000 | **0307768** | |
| KA BW08-L 4P-0500 | **0307765** | |
| KA BW08-L 4P-1000 | **0307766** | |
| Sensor Distributor | | |
| V2-M8-4P-2XM8-3P | **0301380** | |

ⓘ Please note the minimum permitted bending radii for the sensor cables, which are generally 35 mm.
ⓘ Per gripper one sensor (closer/NO) is required, optionally a cable extension.

You can find more detailed information and individual parts of the above-mentioned accessories in the “Accessories” catalog section.

## Electronic magnetic switches

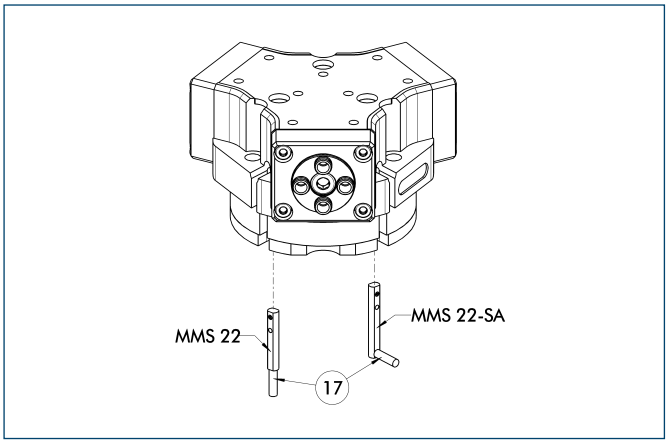


⑰ Cable outlet

End position monitoring for mounting in the C-slot

| Description | ID | Recommended product |
|---|---|---|
| Electronic magnetic switches | | |
| MMS 22-S-M5-PNP | **0301438** | |
| MMS 22-S-M5-NPN | **0301439** | |
| MMS 22-S-M8-PNP | **0301432** | • |
| MMS 22-S-M8-NPN | **0301433** | |
| MMSK 22-S-PNP | **0301434** | |
| MMSK 22-S-NPN | **0301435** | |
| Electronic magnetic switches with lateral cable outlet | | |
| MMS 22-S-M5-PNP-SA | **0301448** | |
| MMS 22-S-M5-NPN-SA | **0301449** | |
| MMS 22-S-M8-PNP-SA | **0301442** | • |
| MMS 22-S-M8-NPN-SA | **0301443** | |
| MMSK 22-S-PNP-SA | **0301444** | |
| MMSK 22-S-NPN-SA | **0301445** | |
| Connection cables | | |
| KA BG05-L 3P-0300 | **0301652** | |
| KA BG08-L 3P-0300-PNP | **0301622** | |
| KA BG08-L 3P-0500-PNP | **0301623** | |
| KA BW05-L 3P-0300 | **0301650** | |
| KA BW08-L 3P-0300-NPN | **0301602** | |
| KA BW08-L 3P-0300-PNP | **0301594** | |
| KA BW08-L 3P-0500-NPN | **9641116** | |
| KA BW08-L 3P-0500-PNP | **0301502** | |
| Cable extensions | | |
| KV BW08-SG08 3P-0030-PNP | **0301495** | |
| KV BW08-SG08 3P-0100-PNP | **0301496** | |
| KV BW08-SG08 3P-0200-PNP | **0301497** | |

ⓘ Two sensors (closer/NO) are required for each gripper, plus extension cables as an option.

ⓘ Please note the minimum permitted bending radii for the sensor cables, which are generally 35 mm.

You can find more detailed information and individual parts of the above-mentioned accessories in the “Accessories” catalog section.

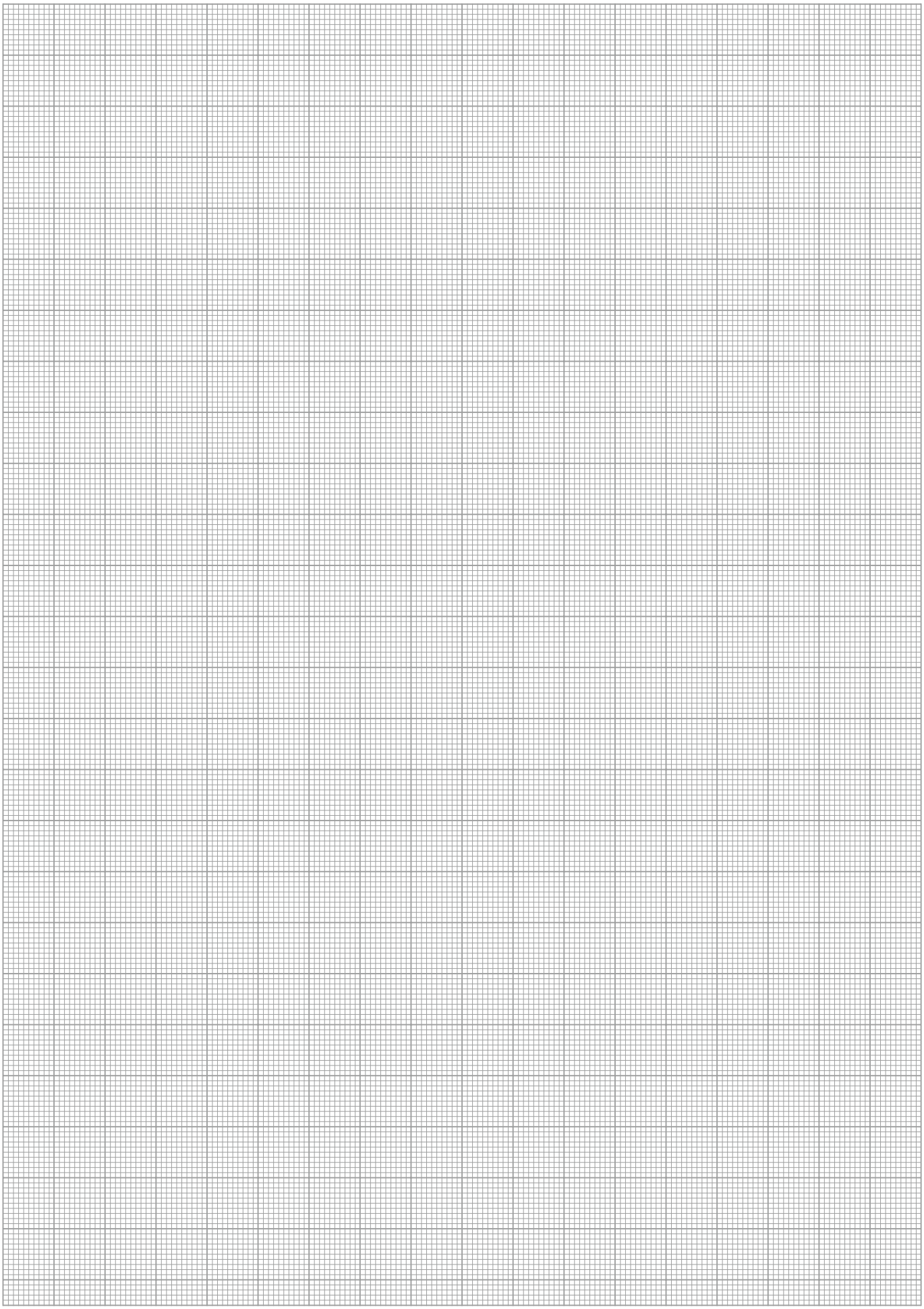

# DPZ-plus 64

**Pneumatic • 3-Finger Centric Gripper • Sealed Gripper**



## Gripping force, I.D. gripping

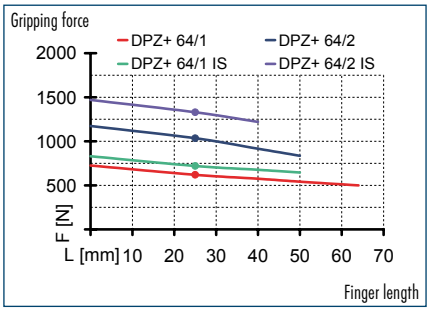


## Gripping force, O.D. gripping

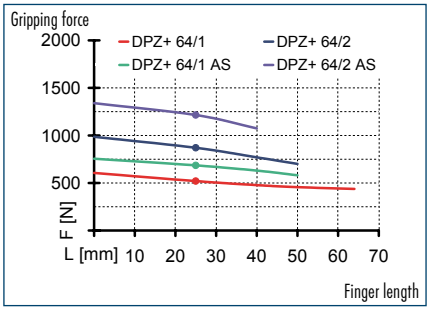


## Finger load

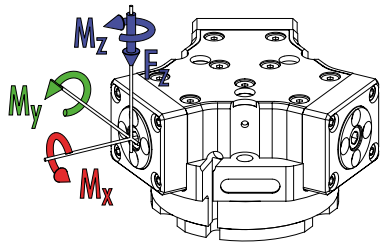


- $M_x$ max. 30.00 Nm
- $M_y$ max. 45.00 Nm
- $M_z$ max. 30.00 Nm
- $F_z$ max. 825.0 N

ⓘ The indicated moments and forces are static values, apply per base jaw and may occur simultaneously. $M_y$ may arise in addition to the moment generated by the gripping force itself. If the max. permitted finger weight is exceeded, it is imperative to throttle the air pressure so that the jaw movement occurs without any hitting or bouncing. Service life may be reduced.

## Technical data

| Description | | DPZ-plus 64-1 | DPZ-plus 64-2 | DPZ-plus 64-1-AS | DPZ-plus 64-2-AS | DPZ-plus 64-1-IS | DPZ-plus 64-2-IS |
|---|---|---|---|---|---|---|---|
| **ID** | | **0304411** | **0304412** | **0304413** | **0304414** | **0304415** | **0304416** |
| Stroke per finger | [mm] | 6 | 3 | 6 | 3 | 6 | 3 |
| Closing force | [N] | 520 | 870 | 685 | 1215 | | |
| Opening force | [N] | 620 | 1030 | | | 820 | 1490 |
| Min. spring force | [N] | | | 165 | 345 | 200 | 460 |
| Weight | [kg] | 0.62 | 0.62 | 0.75 | 0.75 | 0.75 | 0.75 |
| Recommended workpiece weight | [kg] | 2.6 | 4.35 | 2.6 | 4.35 | 2.6 | 4.35 |
| Air consumption per double stroke | [cm³] | 25 | 25 | 48 | 48 | 48 | 48 |
| Min./max. operating pressure | [bar] | 2.5/8 | 2.5/8 | 4/6.5 | 4/6.5 | 4/6.5 | 4/6.5 |
| Nominal operating pressure | [bar] | 6 | 6 | 6 | 6 | 6 | 6 |
| Closing/opening time | [s] | 0.04/0.04 | 0.04/0.04 | 0.03/0.05 | 0.03/0.05 | 0.05/0.03 | 0.05/0.03 |
| Max. permitted finger length | [mm] | 64 | 50 | 50 | 40 | 50 | 40 |
| Max. permitted weight per finger | [kg] | 0.3 | 0.3 | 0.3 | 0.3 | 0.3 | 0.3 |
| IP class | | 67 | 67 | 67 | 67 | 67 | 67 |
| Min./max. ambient temperature | [°C] | -10/90 | -10/90 | -10/90 | -10/90 | -10/90 | -10/90 |
| Repeat accuracy | [mm] | 0.01 | 0.01 | 0.01 | 0.01 | 0.01 | 0.01 |
| Cleanroom class ISO-classification 14644-1 | | 5 | 5 | 5 | 5 | 5 | 5 |

### OPTIONS and their characteristics

| Force intensified version | | DPZ-plus 64-1-KVZ |
|---|---|---|
| ID | | **0304417** |
| Closing force | [N] | 935 |
| Opening force | [N] | 1040 |
| Weight | [kg] | 0.92 |
| Maximum pressure | [bar] | 6 |
| Max. permitted finger length | [mm] | 40 |

## Main view

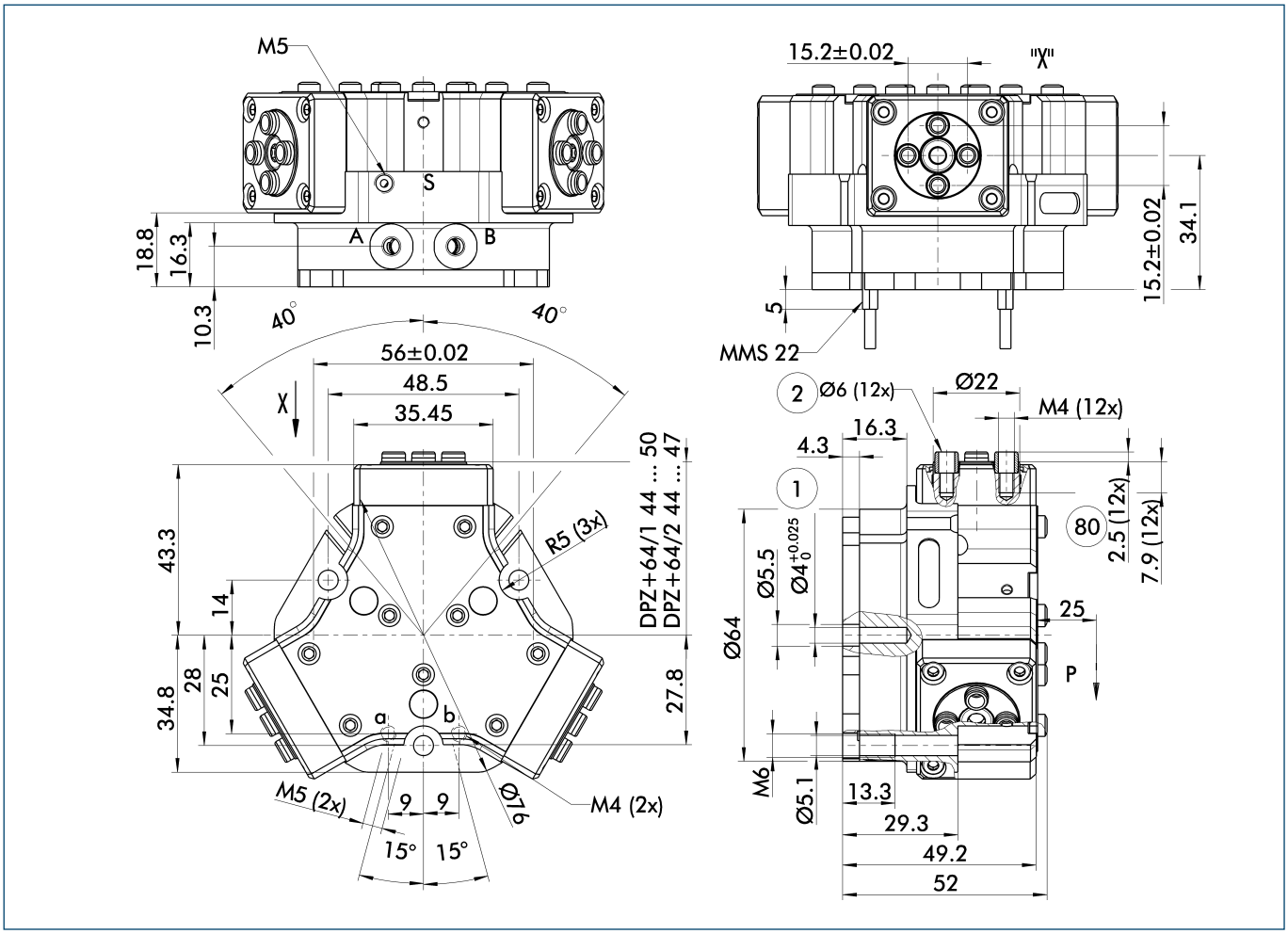


The drawing shows the gripper in the basic version with closed jaws, the dimensions do not include the options described below.

ⓘ The SDV-P pressure maintenance valve can also be used for I.D. or O.D. gripping alternatively or in addition to the spring-loaded, mechanical gripping force maintenance device (see "Accessories" catalog section).

A, a Main/direct connection, gripper opening
B, b Main/direct connection, gripper closing
S Air purge connection
① Gripper connection
② Finger connection
80 Depth of the centering sleeve hole in the matching part

## Hose-free direct connection

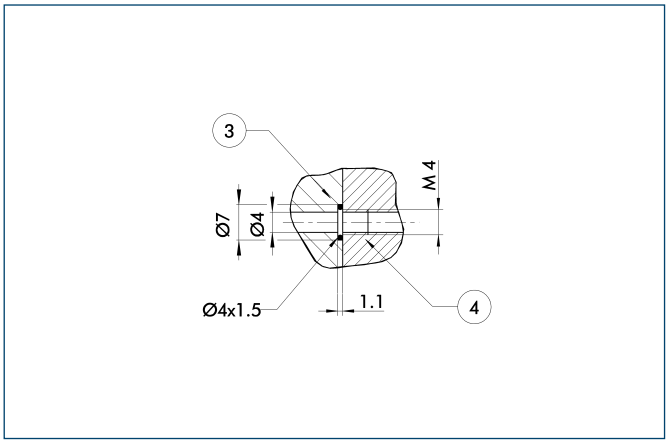


③ Adapter
④ Gripper

The direct connection is used for supplying compressed air without hoses. Instead, the pressure medium is fed through bore-holes in the mounting plate.

## AS/IS gripping force maintenance device

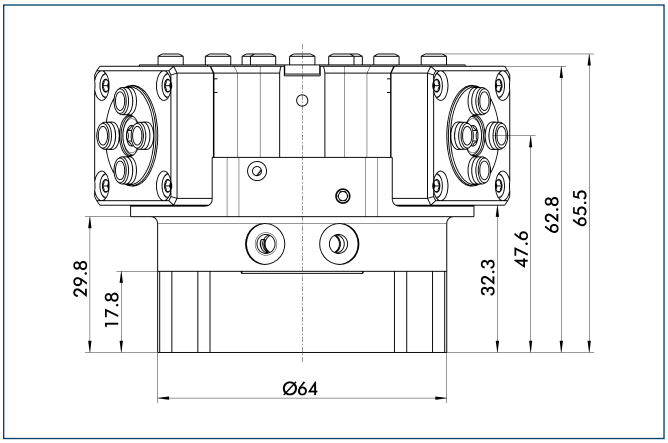


The mechanical gripping force maintenance device ensures a minimum gripping force even in case of pressure drop. This acts as closing force in the AS version, and as opening force in the IS version. In addition, the gripping force maintenance device can also be used for increasing the gripping force or for single-acting gripping.

# DPZ-plus 64



## Force intensified version

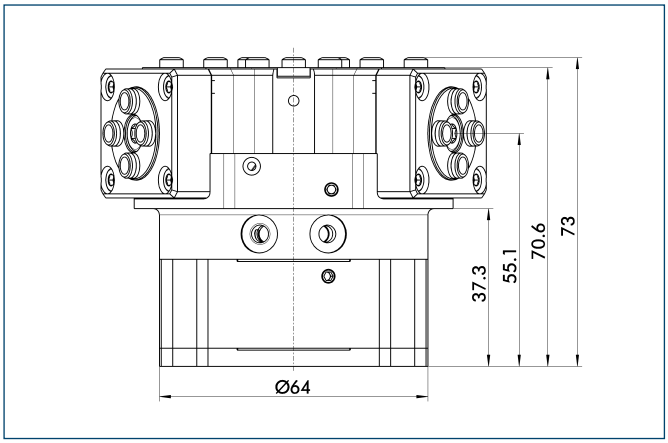


The KVZ cylinder increases the gripping forces during opening and closing. A second, in series-connected piston also increases the force on the wedge hook. The full gripping force shown in the data table is sometimes only reached after a few hundred gripping cycles. Please consider that grippers which are equipped with a gripping force maintenance device (AS / IS) are higher.

## Proposed jaw design

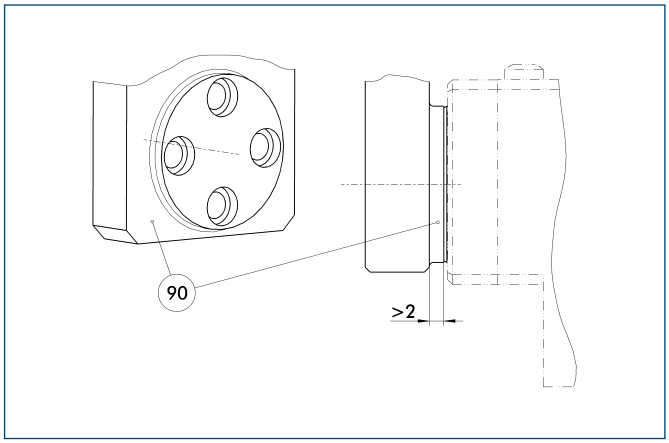


(90) Step

In order to avoid impairment of the stroke due to contamination or chips, there should be a sufficient distance between the top jaws and the gripper.

## Spring-loaded pressure piece

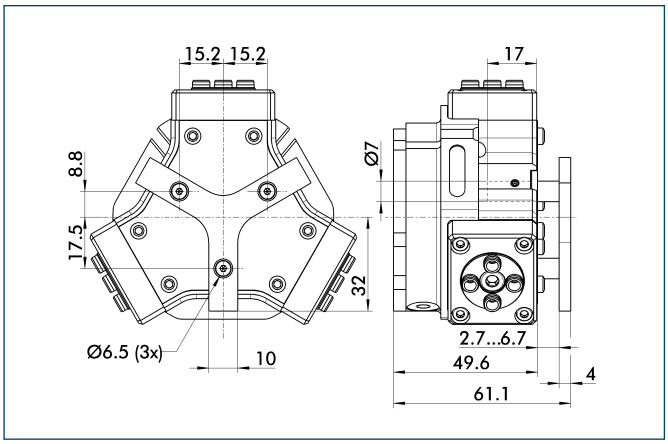


For spring-supported positioning of the workpiece against a stop after the gripper has opened. Especially developed for loading machines.

| Description | ID | Stroke | Min. force |
|---|---|---|---|
| Spring-loaded pressure piece | | | |
| A-PZN-plus/DPZ-plus 64 | **0303720** | 4 mm | 11 N |

## Intermediate Jaws

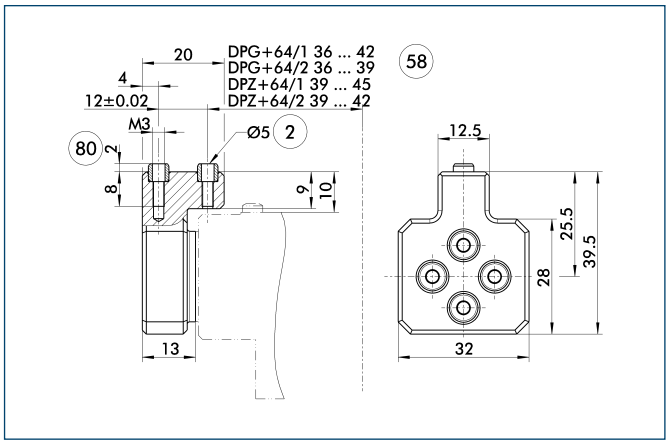


(2) Finger connection
(58) Distance from center of gripper
(80) Depth of the centering sleeve hole in the matching part

Optionally intermediate jaws can be used, enabling direct connection and alignment of top jaws and various standard accessories in Z-direction.

| Description | ID | Material | Scope of delivery |
|---|---|---|---|
| Intermediate Jaws | | | |
| ZBA-DPG-DPZ+64 | **0300192** | Aluminum | 1 |

You can find more detailed information and individual parts of the above-mentioned accessories in the “Accessories” catalog section.

## Tolerance compensation unit

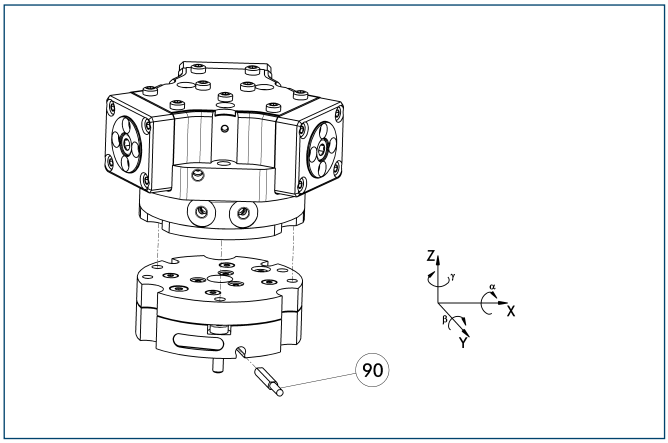


(90) Monitoring of locking

Grippers can be directly mounted without an adapter plate. Tolerance compensation unit and gripper have an identical screw connection diagram. Therefore the tolerance compensation units can be assembled later. Please consider the additional assembly height of the tolerance compensation unit. For details see catalog “Robot Accessories”.

| Description | ID | Locking | Deflection |
|---|---|---|---|
| Compensation unit | | | |
| TCU-064-3-MV-Z | **0324766** | Yes | |
| TCU-064-3-OV-Z | **0324767** | No | |

## Programmable magnetic switch

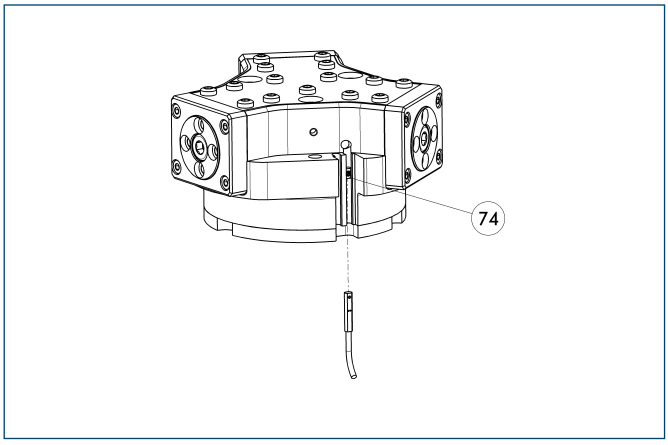


(74) Stop for MMS-P

Position monitoring with two programmable positions per sensor. The end position monitoring is mounted in the C-slot.

| Description | ID | Recommended product |
|---|---|---|
| Programmable magnetic switch | | |
| MMS-P 22-S-M8-PNP | **0301370** | • |
| MMSK-P 22-S-PNP | **0301371** | |
| Connection cables | | |
| KA BG08-L 4P-0500 | **0307767** | |
| KA BG08-L 4P-1000 | **0307768** | |
| KA BW08-L 4P-0500 | **0307765** | |
| KA BW08-L 4P-1000 | **0307766** | |
| Sensor Distributor | | |
| V2-M8-4P-2XM8-3P | **0301380** | |

ⓘ Please note the minimum permitted bending radii for the sensor cables, which are generally 35 mm.
ⓘ Per gripper one sensor (closer/NO) is required, optionally a cable extension.

## Compensation unit with spring reset

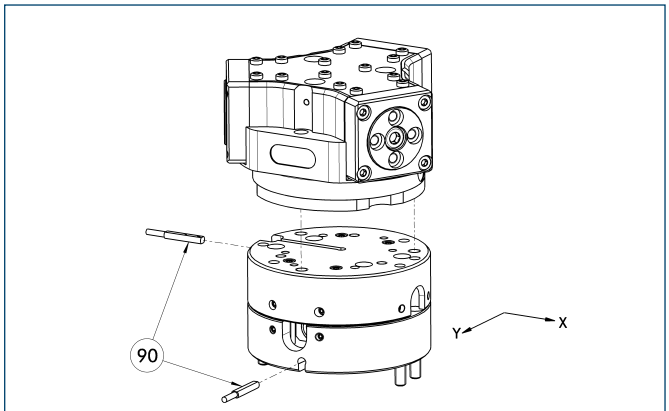


(90) Monitoring

Grippers can be directly mounted without using an adapter plate. For details see our catalog “Robot Accessories”.

| Description | ID | Compensation travel | Reset force |
|---|---|---|---|
| Compensation unit | | | |
| AGE-F-XY-063-1 | **0324940** | ±4 mm | 9 N |
| AGE-F-XY-063-2 | **0324941** | ±4 mm | 10 N |
| AGE-F-XY-063-3 | **0324942** | ±4 mm | 19.3 N |

## Electronic magnetic switches

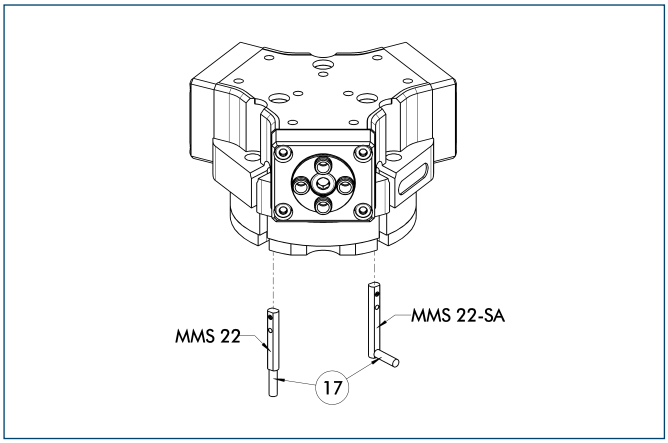


⑰ Cable outlet

End position monitoring for mounting in the C-slot

| Description | ID | Recommended product |
|---|---|---|
| Electronic magnetic switches | | |
| MMS 22-S-M5-PNP | **0301438** | |
| MMS 22-S-M5-NPN | **0301439** | |
| MMS 22-S-M8-PNP | **0301432** | • |
| MMS 22-S-M8-NPN | **0301433** | |
| MMSK 22-S-PNP | **0301434** | |
| MMSK 22-S-NPN | **0301435** | |
| Electronic magnetic switches with lateral cable outlet | | |
| MMS 22-S-M5-PNP-SA | **0301448** | |
| MMS 22-S-M5-NPN-SA | **0301449** | |
| MMS 22-S-M8-PNP-SA | **0301442** | • |
| MMS 22-S-M8-NPN-SA | **0301443** | |
| MMSK 22-S-PNP-SA | **0301444** | |
| MMSK 22-S-NPN-SA | **0301445** | |
| Connection cables | | |
| KA BG05-L 3P-0300 | **0301652** | |
| KA BG08-L 3P-0300-PNP | **0301622** | |
| KA BG08-L 3P-0500-PNP | **0301623** | |
| KA BW05-L 3P-0300 | **0301650** | |
| KA BW08-L 3P-0300-NPN | **0301602** | |
| KA BW08-L 3P-0300-PNP | **0301594** | |
| KA BW08-L 3P-0500-NPN | **9641116** | |
| KA BW08-L 3P-0500-PNP | **0301502** | |
| Cable extensions | | |
| KV BW08-SG08 3P-0030-PNP | **0301495** | |
| KV BW08-SG08 3P-0100-PNP | **0301496** | |
| KV BW08-SG08 3P-0200-PNP | **0301497** | |

ⓘ Two sensors (closer/NO) are required for each gripper, plus extension cables as an option.

ⓘ Please note the minimum permitted bending radii for the sensor cables, which are generally 35 mm.

You can find more detailed information and individual parts of the above-mentioned accessories in the “Accessories” catalog section.

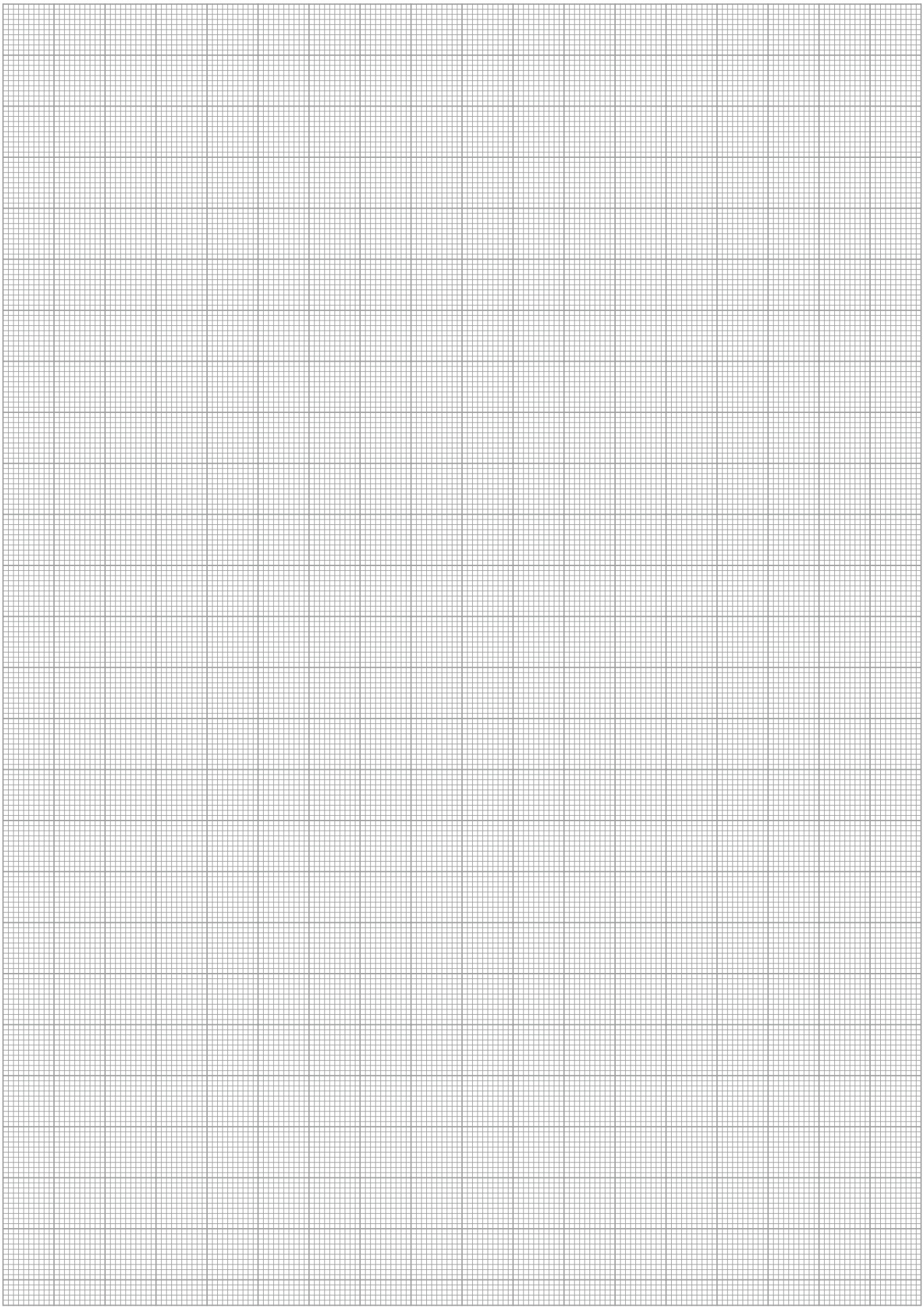

# DPZ-plus 80

**Pneumatic • 3-Finger Centric Gripper • Sealed Gripper**



## Gripping force, I.D. gripping

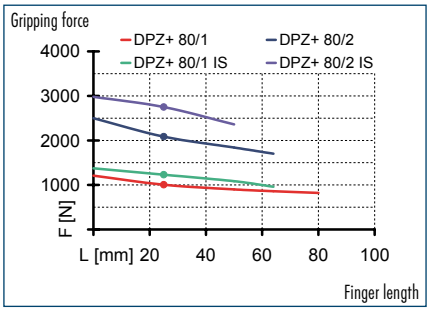


## Gripping force, O.D. gripping

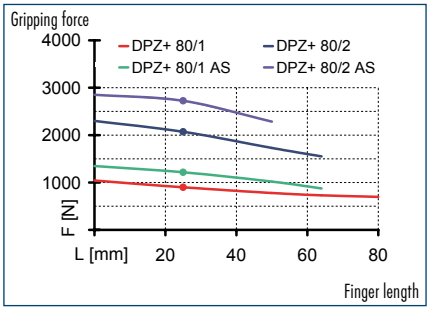


## Finger load

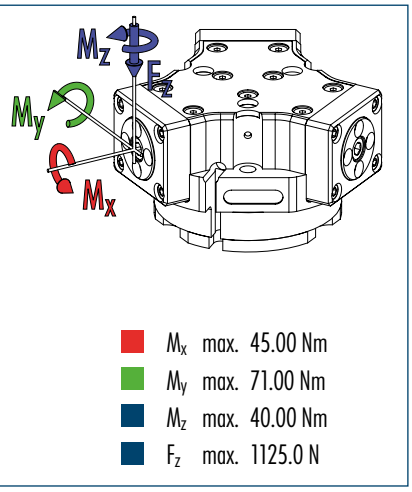


ⓘ The indicated moments and forces are static values, apply per base jaw and may occur simultaneously. $M_y$ may arise in addition to the moment generated by the gripping force itself. If the max. permitted finger weight is exceeded, it is imperative to throttle the air pressure so that the jaw movement occurs without any hitting or bouncing. Service life may be reduced.

## Technical data

| Description | | DPZ-plus 80-1 | DPZ-plus 80-2 | DPZ-plus 80-1-AS | DPZ-plus 80-2-AS | DPZ-plus 80-1-IS | DPZ-plus 80-2-IS |
|---|---|---|---|---|---|---|---|
| **ID** | | **0304421** | **0304422** | **0304423** | **0304424** | **0304425** | **0304426** |
| Stroke per finger | [mm] | 8 | 4 | 8 | 4 | 8 | 4 |
| Closing force | [N] | 900 | 2070 | 1215 | 2725 | | |
| Opening force | [N] | 1000 | 2085 | | | 1330 | 2765 |
| Min. spring force | [N] | | | 315 | 655 | 330 | 680 |
| Weight | [kg] | 1.3 | 1.3 | 1.45 | 1.45 | 1.45 | 1.45 |
| Recommended workpiece weight | [kg] | 4.5 | 10.35 | 4.5 | 10.35 | 4.5 | 10.35 |
| Air consumption per double stroke | [cm³] | 60 | 60 | 108 | 108 | 108 | 108 |
| Min./max. operating pressure | [bar] | 2.5/8 | 2.5/8 | 4/6.5 | 4/6.5 | 4/6.5 | 4/6.5 |
| Nominal operating pressure | [bar] | 6 | 6 | 6 | 6 | 6 | 6 |
| Closing/opening time | [s] | 0.07/0.07 | 0.07/0.07 | 0.05/0.08 | 0.05/0.08 | 0.08/0.05 | 0.08/0.05 |
| Max. permitted finger length | [mm] | 80 | 64 | 64 | 50 | 64 | 50 |
| Max. permitted weight per finger | [kg] | 0.5 | 0.5 | 0.5 | 0.5 | 0.5 | 0.5 |
| IP class | | 67 | 67 | 67 | 67 | 67 | 67 |
| Min./max. ambient temperature | [°C] | -10/90 | -10/90 | -10/90 | -10/90 | -10/90 | -10/90 |
| Repeat accuracy | [mm] | 0.01 | 0.01 | 0.01 | 0.01 | 0.01 | 0.01 |
| Cleanroom class ISO-classification 14644-1 | | 5 | 5 | 5 | 5 | 5 | 5 |

### OPTIONS and their characteristics

| Force intensified version | | DPZ-plus 80-1-KVZ |
|---|---|---|
| ID | | **0304427** |
| Closing force | [N] | 1620 |
| Opening force | [N] | 1750 |
| Weight | [kg] | 1.6 |
| Maximum pressure | [bar] | 6 |
| Max. permitted finger length | [mm] | 50 |

## Main view

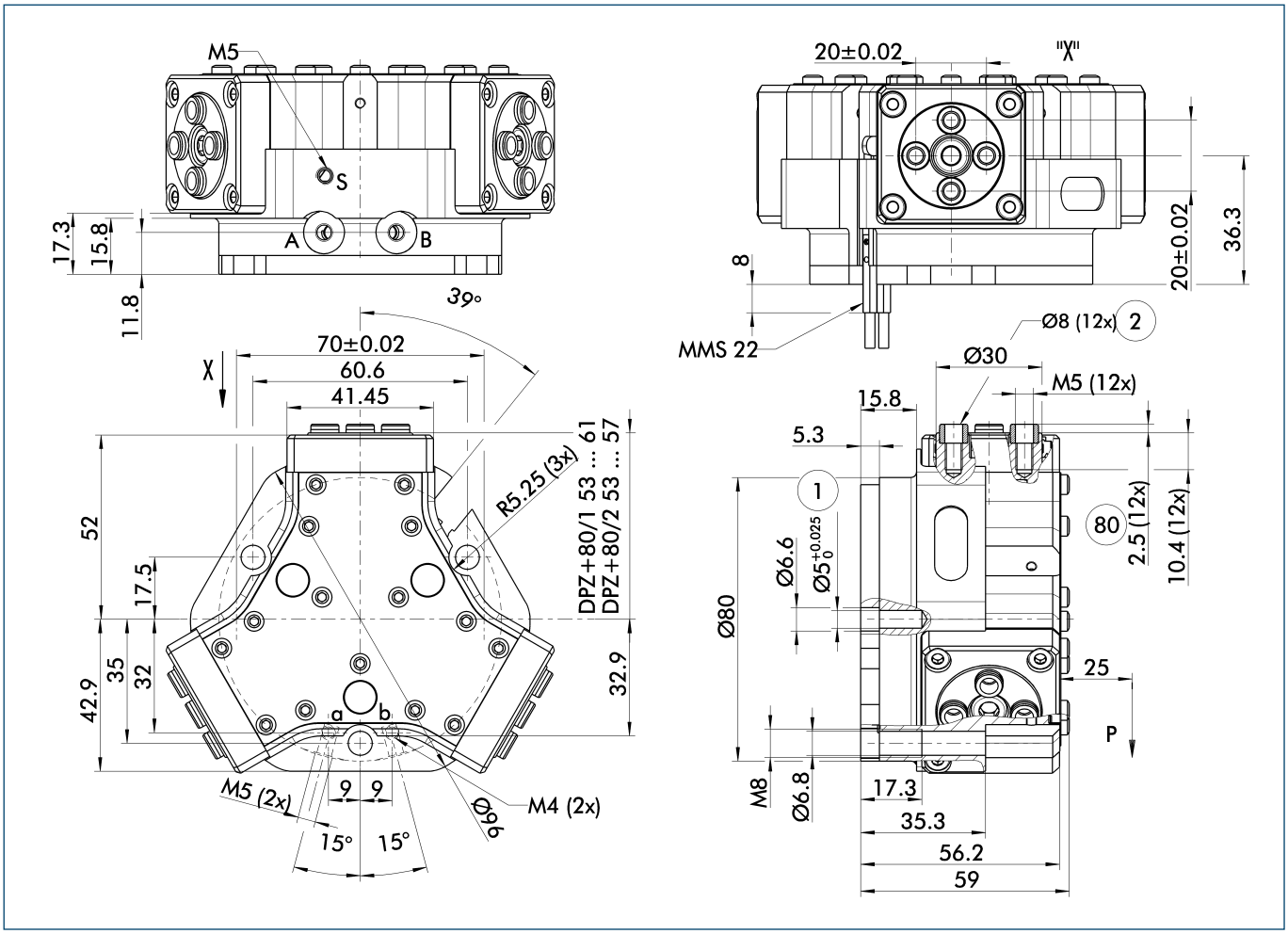


For finger connection, we recommend only to use two of the four centering bores for each finger. The drawing shows the gripper in the basic version with closed jaws, the dimensions do not include the options described below.

ⓘ The SDV-P pressure maintenance valve can also be used for I.D. or O.D. gripping alternatively or in addition to the spring-loaded, mechanical gripping force maintenance device (see "Accessories" catalog section).

A, a Main/direct connection, gripper opening
B, b Main/direct connection, gripper closing
S Air purge connection
① Gripper connection
② Finger connection
80 Depth of the centering sleeve hole in the matching part

## Hose-free direct connection

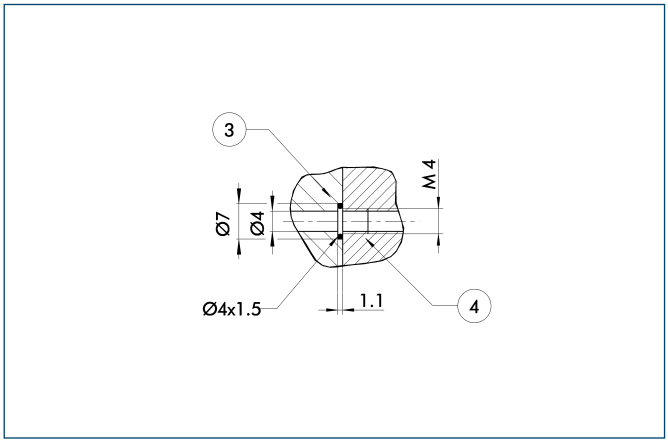


③ Adapter
④ Gripper

The direct connection is used for supplying compressed air without hoses. Instead, the pressure medium is fed through bore-holes in the mounting plate.

## AS/IS gripping force maintenance device

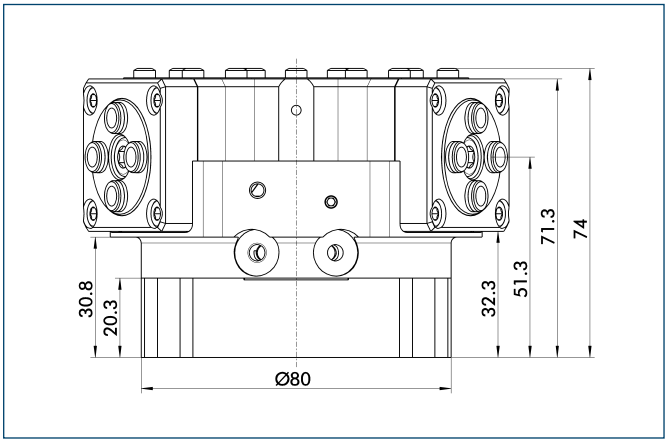


The mechanical gripping force maintenance device ensures a minimum gripping force even in case of pressure drop. This acts as closing force in the AS version, and as opening force in the IS version. In addition, the gripping force maintenance device can also be used for increasing the gripping force or for single-acting gripping.

## Force intensified version

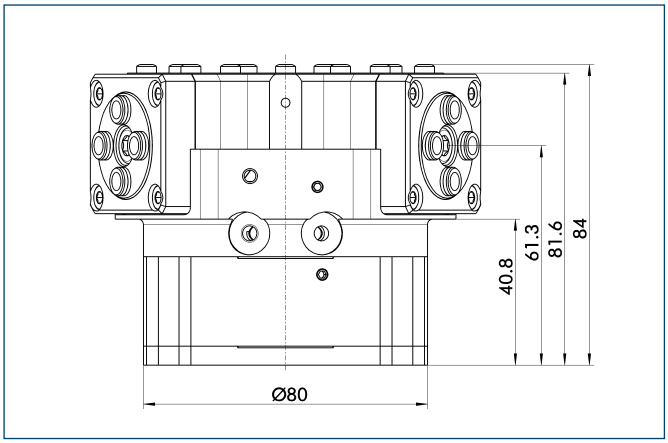


The KVZ cylinder increases the gripping forces during opening and closing. A second, in series-connected piston also increases the force on the wedge hook. The full gripping force shown in the data table is sometimes only reached after a few hundred gripping cycles. Please consider that grippers which are equipped with a gripping force maintenance device (AS / IS) are higher.

## Proposed jaw design

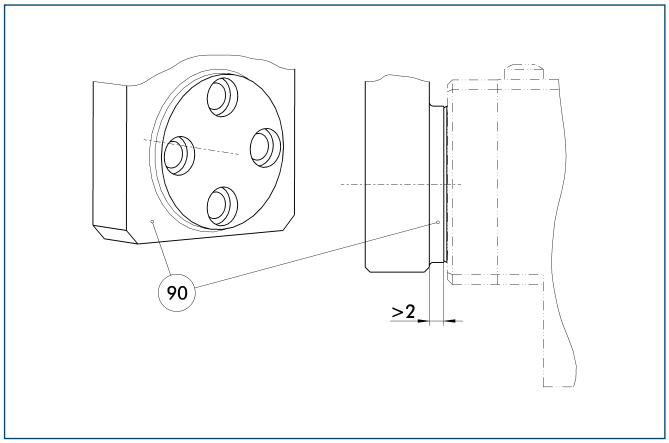


(90) Step

In order to avoid impairment of the stroke due to contamination or chips, there should be a sufficient distance between the top jaws and the gripper.

## Spring-loaded pressure piece

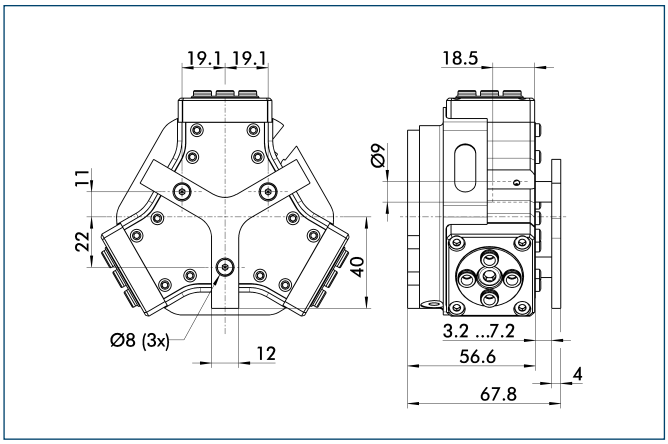


For spring-supported positioning of the workpiece against a stop after the gripper has opened. Especially developed for loading machines.

| Description | ID | Stroke | Min. force |
|---|---|---|---|
| Spring-loaded pressure piece | | | |
| A-PZN-plus/DPZ-plus 80 | **0303721** | 4 mm | 18 N |

## Intermediate Jaws

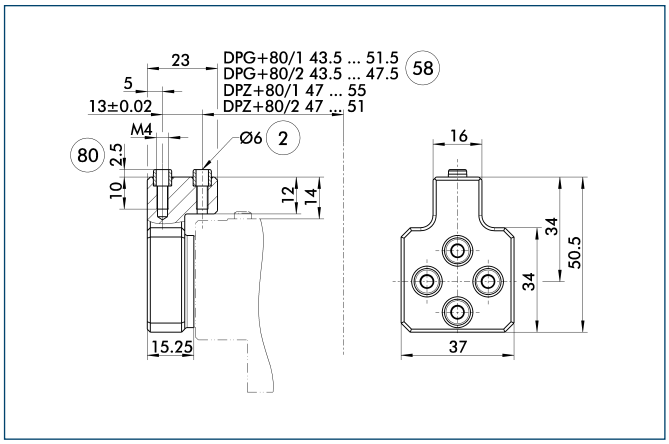


(2) Finger connection
(58) Distance from center of gripper
(80) Depth of the centering sleeve hole in the matching part

Optionally intermediate jaws can be used, enabling direct connection and alignment of top jaws and various standard accessories in Z-direction.

| Description | ID | Material | Scope of delivery |
|---|---|---|---|
| Intermediate Jaws | | | |
| ZBA-DPG-DPZ+80 | **0300193** | Aluminum | 1 |

You can find more detailed information and individual parts of the above-mentioned accessories in the “Accessories” catalog section.

## Tolerance compensation unit

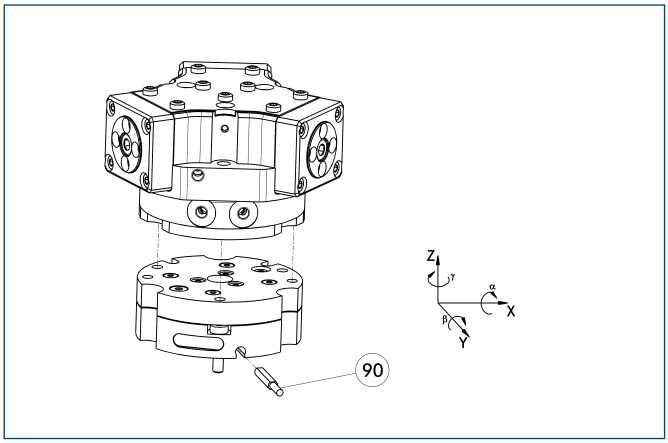


(90) Monitoring of locking

Grippers can be directly mounted without an adapter plate. Tolerance compensation unit and gripper have an identical screw connection diagram. Therefore the tolerance compensation units can be assembled later. Please consider the additional assembly height of the tolerance compensation unit. For details see catalog “Robot Accessories”.

| Description | ID | Locking | Deflection |
|---|---|---|---|
| Compensation unit | | | |
| TCU-080-3-MV-Z | **0324784** | Yes | |
| TCU-080-3-OV-Z | **0324785** | No | |

## Programmable magnetic switch

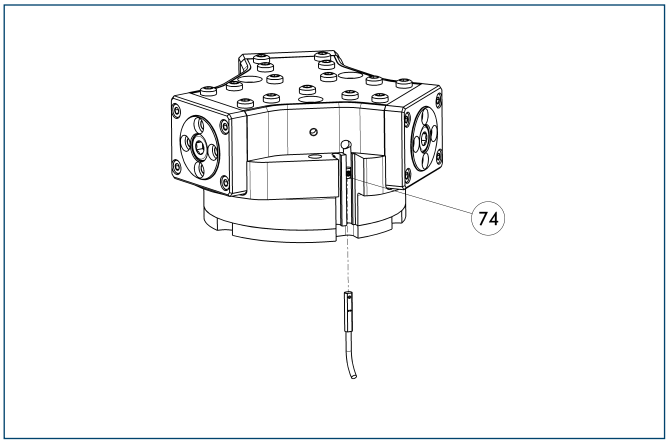


(74) Stop for MMS-P

Position monitoring with two programmable positions per sensor. The end position monitoring is mounted in the C-slot.

| Description | ID | Recommended product |
|---|---|---|
| Programmable magnetic switch | | |
| MMS-P 22-S-M8-PNP | **0301370** | • |
| MMSK-P 22-S-PNP | **0301371** | |
| Connection cables | | |
| KA BG08-L 4P-0500 | **0307767** | |
| KA BG08-L 4P-1000 | **0307768** | |
| KA BW08-L 4P-0500 | **0307765** | |
| KA BW08-L 4P-1000 | **0307766** | |
| Sensor Distributor | | |
| V2-M8-4P-2XM8-3P | **0301380** | |

ⓘ Please note the minimum permitted bending radii for the sensor cables, which are generally 35 mm.
ⓘ Per gripper one sensor (closer/NO) is required, optionally a cable extension.

## Compensation unit with spring reset

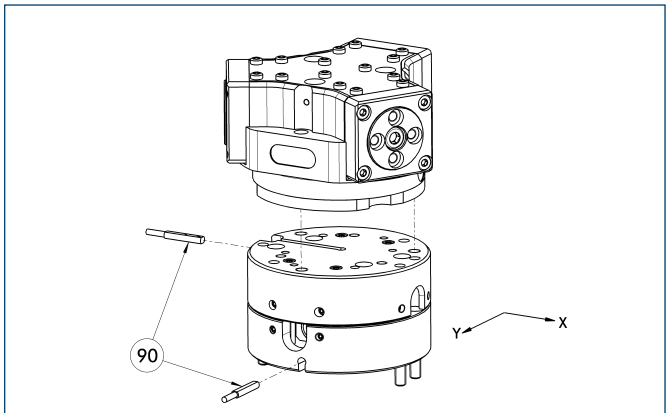


(90) Monitoring

Grippers can be directly mounted without using an adapter plate. For details see our catalog “Robot Accessories”.

| Description | ID | Compensation travel | Reset force |
|---|---|---|---|
| Compensation unit | | | |
| AGE-F-XY-063-1 | **0324940** | ±4 mm | 9 N |
| AGE-F-XY-063-2 | **0324941** | ±4 mm | 10 N |
| AGE-F-XY-063-3 | **0324942** | ±4 mm | 19.3 N |

## Electronic magnetic switches

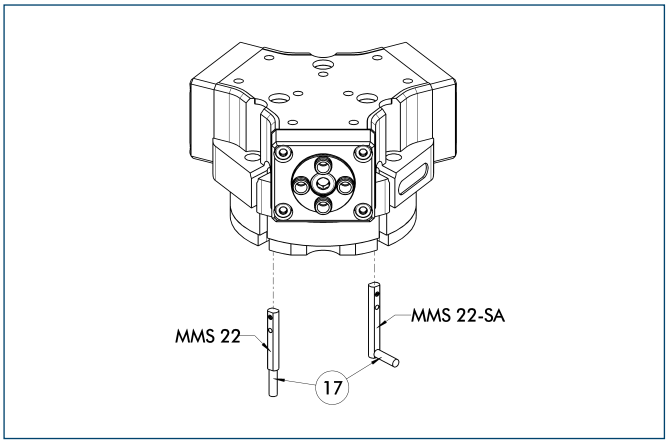


⑰ Cable outlet

End position monitoring for mounting in the C-slot

| Description | ID | Recommended product |
|---|---|---|
| Electronic magnetic switches | | |
| MMS 22-S-M5-PNP | **0301438** | |
| MMS 22-S-M5-NPN | **0301439** | |
| MMS 22-S-M8-PNP | **0301432** | • |
| MMS 22-S-M8-NPN | **0301433** | |
| MMSK 22-S-PNP | **0301434** | |
| MMSK 22-S-NPN | **0301435** | |
| Electronic magnetic switches with lateral cable outlet | | |
| MMS 22-S-M5-PNP-SA | **0301448** | |
| MMS 22-S-M5-NPN-SA | **0301449** | |
| MMS 22-S-M8-PNP-SA | **0301442** | • |
| MMS 22-S-M8-NPN-SA | **0301443** | |
| MMSK 22-S-PNP-SA | **0301444** | |
| MMSK 22-S-NPN-SA | **0301445** | |
| Reed Switches | | |
| RMS 22-S-M8 | **0377720** | • |
| Connection cables | | |
| KA BG05-L 3P-0300 | **0301652** | |
| KA BG08-L 3P-0300-PNP | **0301622** | |
| KA BG08-L 3P-0500-PNP | **0301623** | |
| KA BW05-L 3P-0300 | **0301650** | |
| KA BW08-L 3P-0300-NPN | **0301602** | |
| KA BW08-L 3P-0300-PNP | **0301594** | |
| KA BW08-L 3P-0500-NPN | **9641116** | |
| KA BW08-L 3P-0500-PNP | **0301502** | |
| Cable extensions | | |
| KV BW08-SG08 3P-0030-PNP | **0301495** | |
| KV BW08-SG08 3P-0100-PNP | **0301496** | |
| KV BW08-SG08 3P-0200-PNP | **0301497** | |

ⓘ Two sensors (closer/NO) are required for each gripper, plus extension cables as an option.

ⓘ Please note the minimum permitted bending radii for the sensor cables, which are generally 35 mm.

You can find more detailed information and individual parts of the above-mentioned accessories in the “Accessories” catalog section.

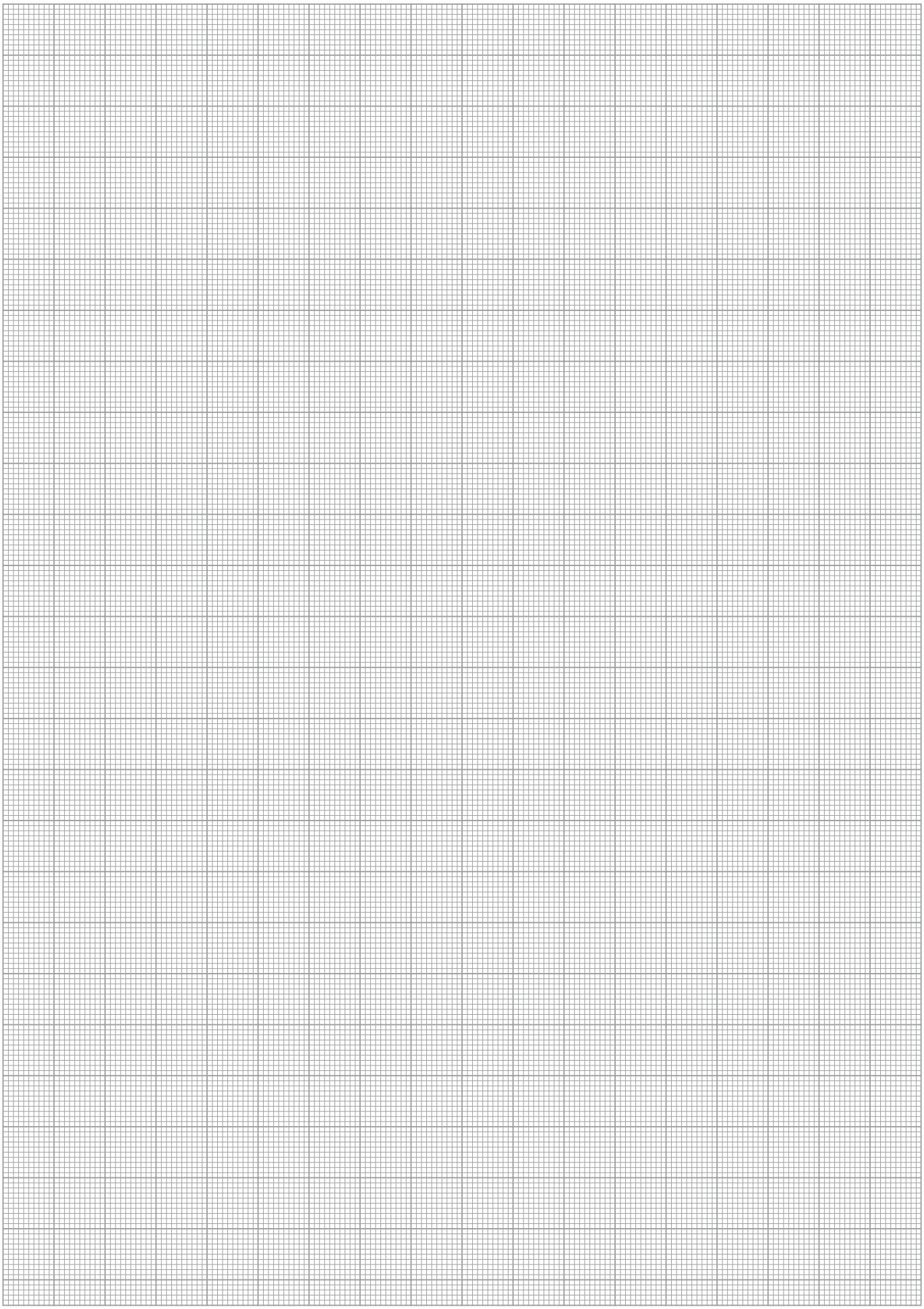

# DPZ-plus 100

**Pneumatic • 3-Finger Centric Gripper • Sealed Gripper**



## Gripping force, I.D. gripping

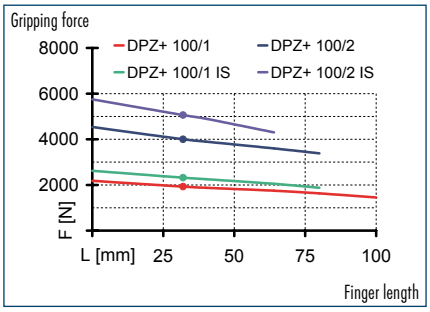


## Gripping force, O.D. gripping

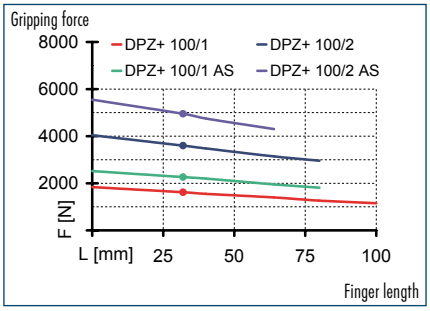


## Finger load

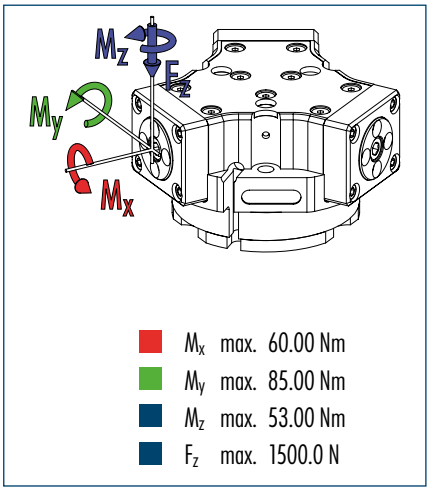


ⓘ The indicated moments and forces are static values, apply per base jaw and may occur simultaneously. $M_y$ may arise in addition to the moment generated by the gripping force itself. If the max. permitted finger weight is exceeded, it is imperative to throttle the air pressure so that the jaw movement occurs without any hitting or bouncing. Service life may be reduced.

## Technical data

| Description | | DPZ-plus 100-1 | DPZ-plus 100-2 | DPZ-plus 100-1-AS | DPZ-plus 100-2-AS | DPZ-plus 100-1-IS | DPZ-plus 100-2-IS |
|---|---|---|---|---|---|---|---|
| **ID** | | **0304431** | **0304432** | **0304433** | **0304434** | **0304435** | **0304436** |
| Stroke per finger | [mm] | 10 | 5 | 10 | 5 | 10 | 5 |
| Closing force | [N] | 1620 | 3600 | 2265 | 4950 | | |
| Opening force | [N] | 1920 | 4000 | | | 2620 | 5460 |
| Min. spring force | [N] | | | 645 | 1350 | 700 | 1460 |
| Weight | [kg] | 1.9 | 1.9 | 2.3 | 2.3 | 2.3 | 2.3 |
| Recommended workpiece weight | [kg] | 8.1 | 18 | 8.1 | 18 | 8.1 | 18 |
| Air consumption per double stroke | [cm³] | 120 | 120 | 210 | 210 | 210 | 210 |
| Min./max. operating pressure | [bar] | 2.5/8 | 2.5/8 | 4/6.5 | 4/6.5 | 4/6.5 | 4/6.5 |
| Nominal operating pressure | [bar] | 6 | 6 | 6 | 6 | 6 | 6 |
| Closing/opening time | [s] | 0.13/0.13 | 0.13/0.13 | 0.13/0.25 | 0.13/0.25 | 0.25/0.13 | 0.25/0.13 |
| Max. permitted finger length | [mm] | 100 | 80 | 80 | 64 | 80 | 64 |
| Max. permitted weight per finger | [kg] | 0.95 | 0.95 | 0.95 | 0.95 | 0.95 | 0.95 |
| IP class | | 67 | 67 | 67 | 67 | 67 | 67 |
| Min./max. ambient temperature | [°C] | -10/90 | -10/90 | -10/90 | -10/90 | -10/90 | -10/90 |
| Repeat accuracy | [mm] | 0.01 | 0.01 | 0.01 | 0.01 | 0.01 | 0.01 |
| Cleanroom class ISO-classification 14644-1 | | 5 | 5 | 5 | 5 | 5 | 5 |

## Main view

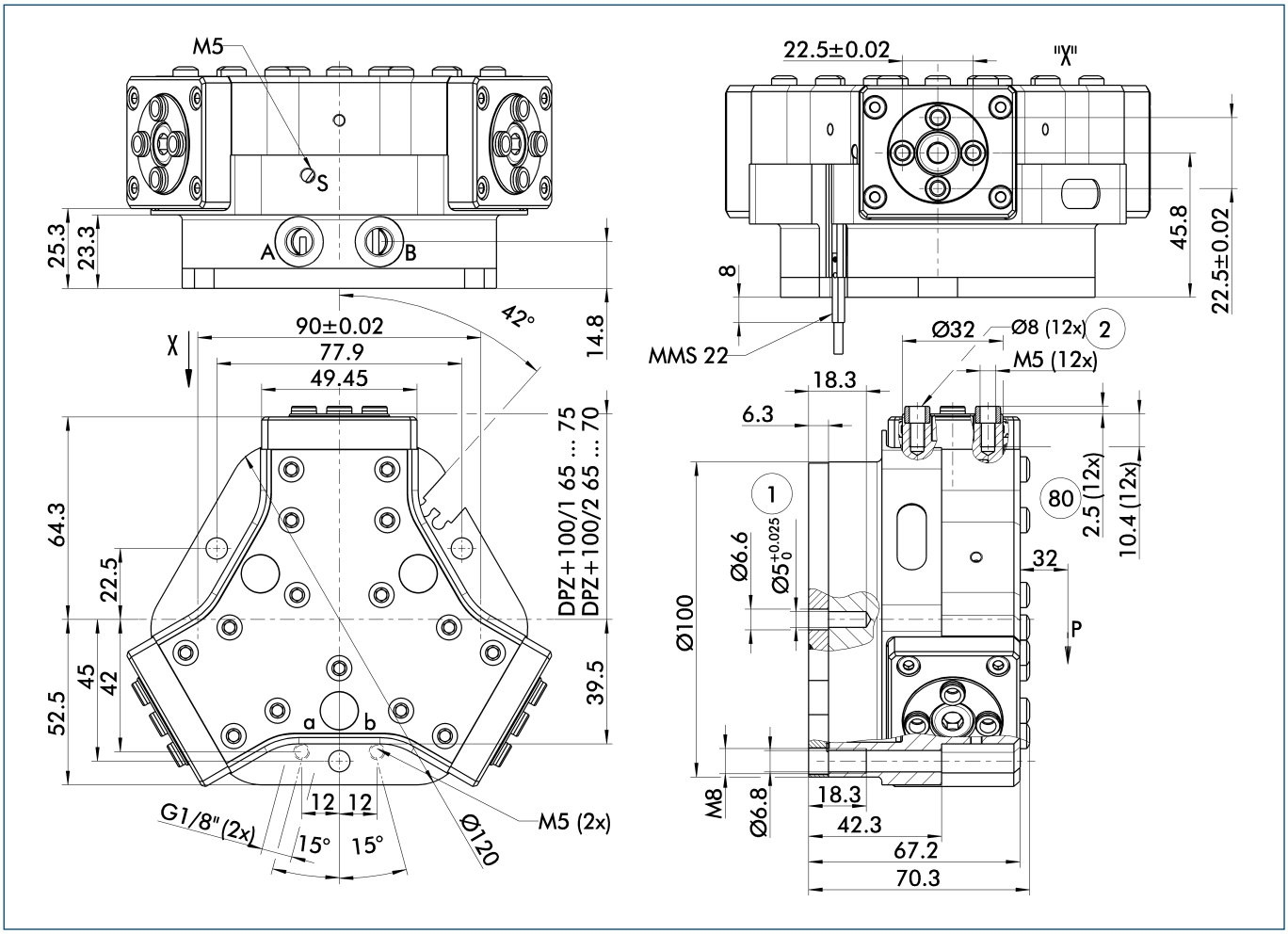


For finger connection, we recommend only to use two of the four centering bores for each finger. The drawing shows the gripper in the basic version with closed jaws, the dimensions do not include the options described below.

ⓘ The SDV-P pressure maintenance valve can also be used for I.D. or O.D. gripping alternatively or in addition to the spring-loaded, mechanical gripping force maintenance device (see "Accessories" catalog section).

A, a Main/direct connection, gripper opening
B, b Main/direct connection, gripper closing
S Air purge connection
① Gripper connection
② Finger connection
80 Depth of the centering sleeve hole in the matching part

## Hose-free direct connection

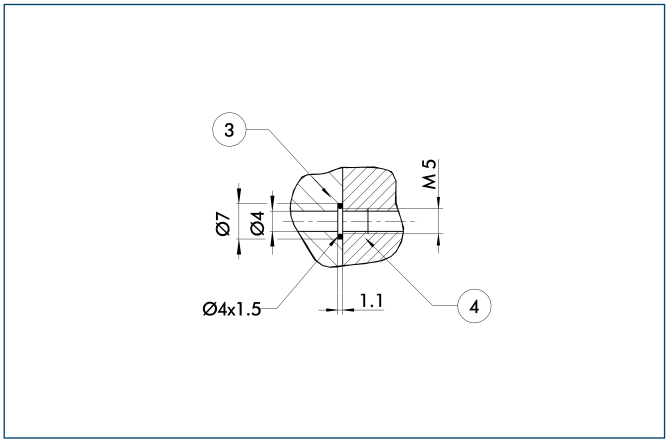


③ Adapter
④ Gripper

The direct connection is used for supplying compressed air without hoses. Instead, the pressure medium is fed through bore-holes in the mounting plate.

## AS/IS gripping force maintenance device

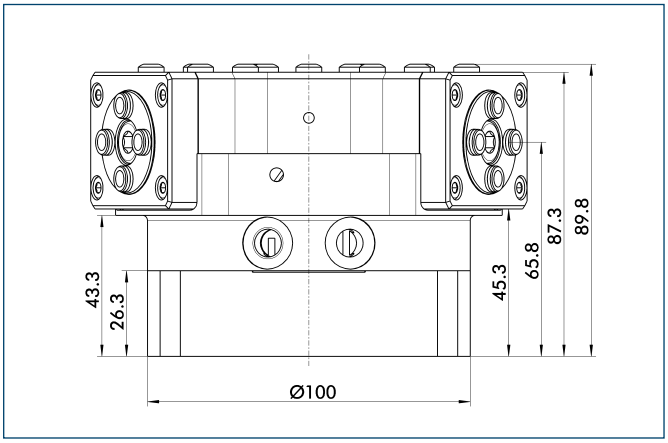


The mechanical gripping force maintenance device ensures a minimum gripping force even in case of pressure drop. This acts as closing force in the AS version, and as opening force in the IS version. In addition, the gripping force maintenance device can also be used for increasing the gripping force or for single-acting gripping.

## Proposed jaw design

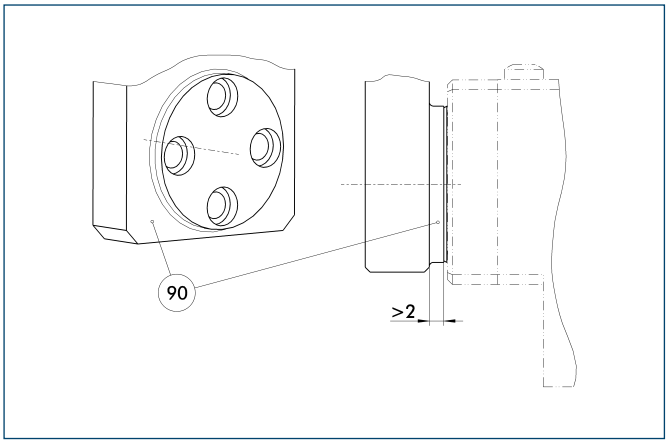


(90) Step

In order to avoid impairment of the stroke due to contamination or chips, there should be a sufficient distance between the top jaws and the gripper.

## Spring-loaded pressure piece

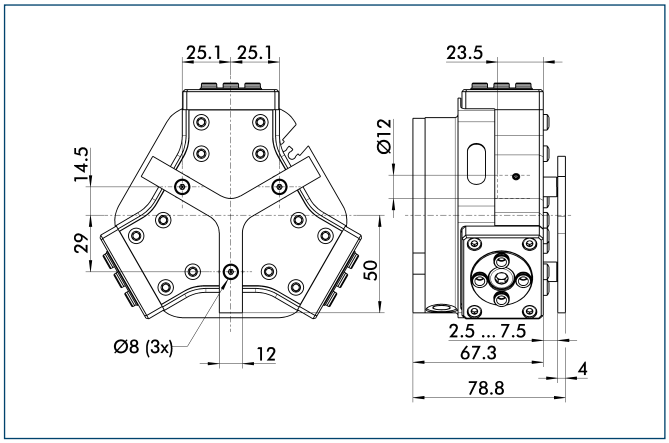


For spring-supported positioning of the workpiece against a stop after the gripper has opened. Especially developed for loading machines.

| Description | ID | Stroke | Min. force |
|---|---|---|---|
| Spring-loaded pressure piece | | | |
| A-PZN-plus/DPZ-plus 100 | **0303722** | 5 mm | 35 N |

## Intermediate Jaws

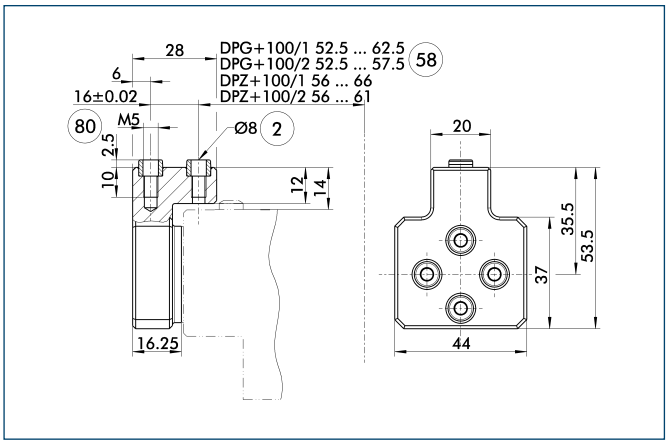


(2) Finger connection
(58) Distance from center of gripper
(80) Depth of the centering sleeve hole in the matching part

Optionally intermediate jaws can be used, enabling direct connection and alignment of top jaws and various standard accessories in Z-direction.

| Description | ID | Material | Scope of delivery |
|---|---|---|---|
| Intermediate Jaws | | | |
| ZBA-DPG-DPZ+100 | **0300194** | Aluminum | 1 |

## Tolerance compensation unit

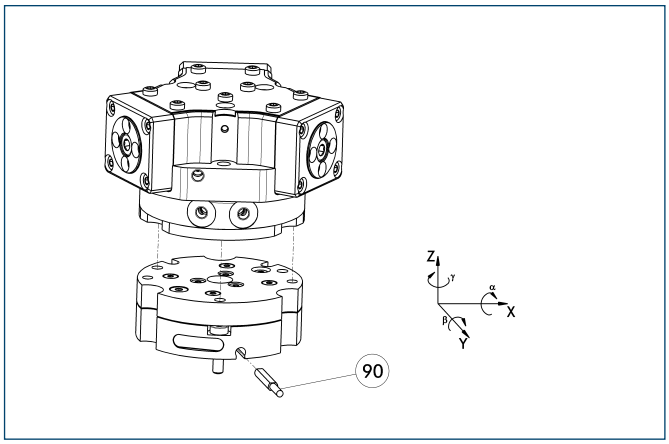


(90) Monitoring of locking

Grippers can be directly mounted without an adapter plate. Tolerance compensation unit and gripper have an identical screw connection diagram. Therefore the tolerance compensation units can be assembled later. Please consider the additional assembly height of the tolerance compensation unit. For details see catalog “Robot Accessories”.

| Description | ID | Locking | Deflection |
|---|---|---|---|
| Compensation unit | | | |
| TCU-100-2-MV-Z | **0324794** | Yes | |
| TCU-100-2-OV-Z | **0324799** | No | |

You can find more detailed information and individual parts of the above-mentioned accessories in the “Accessories” catalog section.

## Compensation unit with spring reset

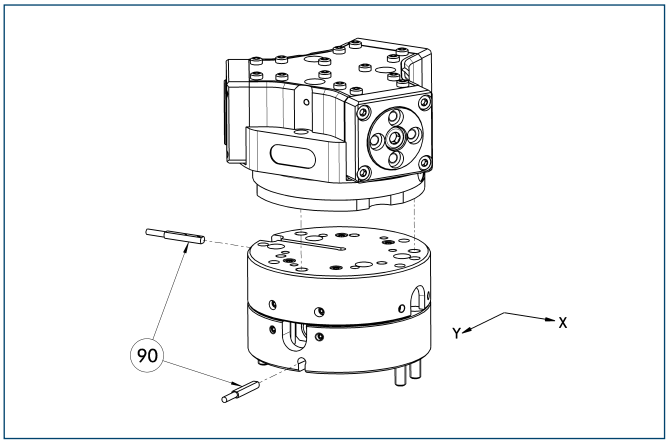


(90) Monitoring

Grippers can be directly mounted without using an adapter plate. For details see our catalog “Robot Accessories”.

| Description | ID | Compensation travel | Reset force |
|---|---|---|---|
| Compensation unit | | | |
| AGE-F-XY-080-1 | **0324960** | ±5 mm | 28.3 N |
| AGE-F-XY-080-2 | **0324961** | ±5 mm | 42.5 N |
| AGE-F-XY-080-3 | **0324962** | ±5 mm | 47.6 N |

## Programmable magnetic switch

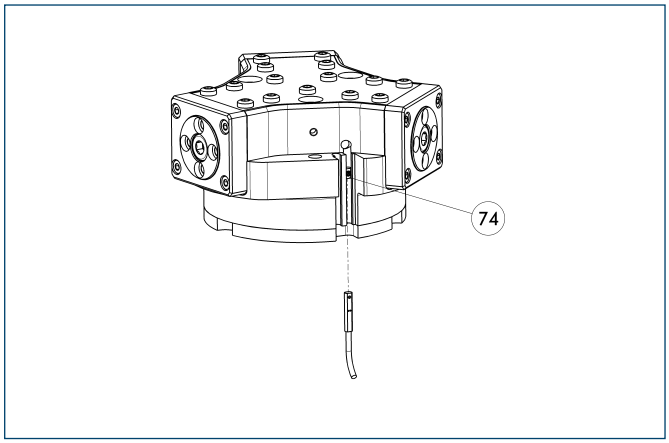


(74) Stop for MMS-P

Position monitoring with two programmable positions per sensor. The end position monitoring is mounted in the C-slot.

| Description | ID | Recommended product |
|---|---|---|
| Programmable magnetic switch | | |
| MMS-P 22-S-M8-PNP | **0301370** | • |
| MMSK-P 22-S-PNP | **0301371** | |
| Connection cables | | |
| KA BG08-L 4P-0500 | **0307767** | |
| KA BG08-L 4P-1000 | **0307768** | |
| KA BW08-L 4P-0500 | **0307765** | |
| KA BW08-L 4P-1000 | **0307766** | |
| Sensor Distributor | | |
| V2-M8-4P-2XM8-3P | **0301380** | |

ⓘ Please note the minimum permitted bending radii for the sensor cables, which are generally 35 mm.
ⓘ Per gripper one sensor (closer/NO) is required, optionally a cable extension.

You can find more detailed information and individual parts of the above-mentioned accessories in the “Accessories” catalog section.

## Electronic magnetic switches

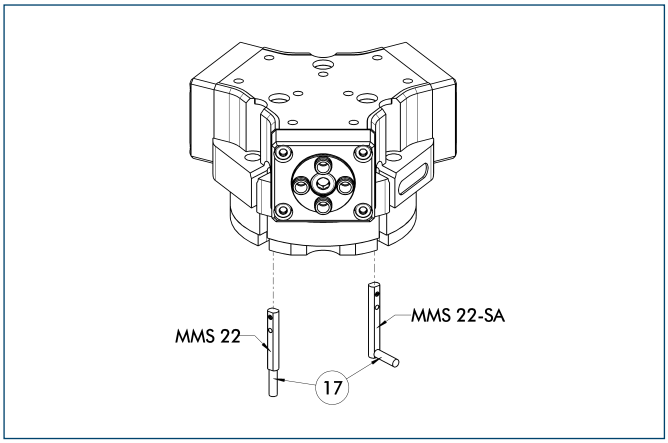


⑰ Cable outlet

End position monitoring for mounting in the C-slot

| Description | ID | Recommended product |
|---|---|---|
| Electronic magnetic switches | | |
| MMS 22-S-M5-PNP | **0301438** | |
| MMS 22-S-M5-NPN | **0301439** | |
| MMS 22-S-M8-PNP | **0301432** | • |
| MMS 22-S-M8-NPN | **0301433** | |
| MMSK 22-S-PNP | **0301434** | |
| MMSK 22-S-NPN | **0301435** | |
| Electronic magnetic switches with lateral cable outlet | | |
| MMS 22-S-M5-PNP-SA | **0301448** | |
| MMS 22-S-M5-NPN-SA | **0301449** | |
| MMS 22-S-M8-PNP-SA | **0301442** | • |
| MMS 22-S-M8-NPN-SA | **0301443** | |
| MMSK 22-S-PNP-SA | **0301444** | |
| MMSK 22-S-NPN-SA | **0301445** | |
| Reed Switches | | |
| RMS 22-S-M8 | **0377720** | • |
| Connection cables | | |
| KA BG05-L 3P-0300 | **0301652** | |
| KA BG08-L 3P-0300-PNP | **0301622** | |
| KA BG08-L 3P-0500-PNP | **0301623** | |
| KA BW05-L 3P-0300 | **0301650** | |
| KA BW08-L 3P-0300-NPN | **0301602** | |
| KA BW08-L 3P-0300-PNP | **0301594** | |
| KA BW08-L 3P-0500-NPN | **9641116** | |
| KA BW08-L 3P-0500-PNP | **0301502** | |
| Cable extensions | | |
| KV BW08-SG08 3P-0030-PNP | **0301495** | |
| KV BW08-SG08 3P-0100-PNP | **0301496** | |
| KV BW08-SG08 3P-0200-PNP | **0301497** | |

ⓘ Two sensors (closer/NO) are required for each gripper, plus extension cables as an option.

ⓘ Please note the minimum permitted bending radii for the sensor cables, which are generally 35 mm.

You can find more detailed information and individual parts of the above-mentioned accessories in the “Accessories” catalog section.

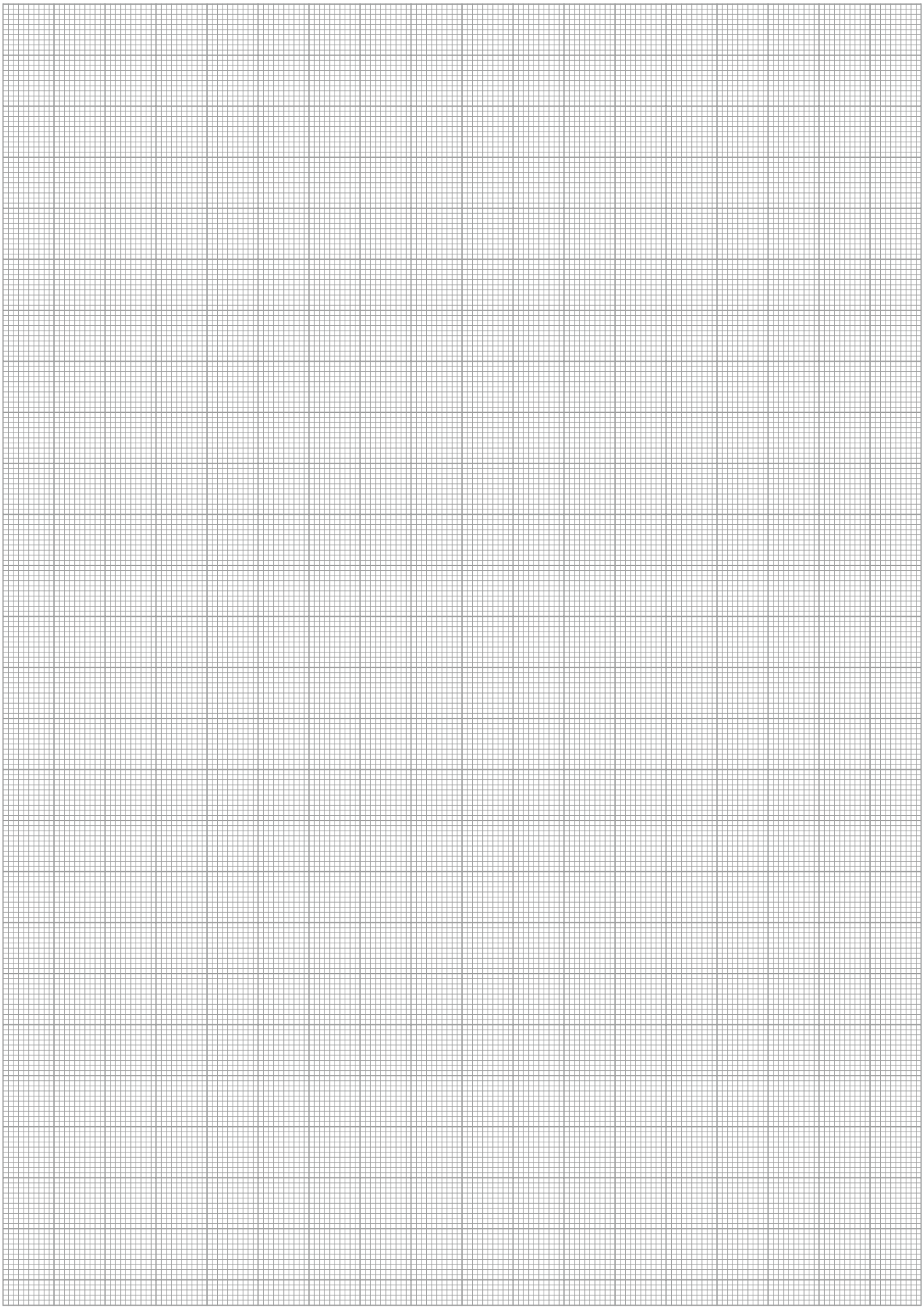

# DPZ-plus 125

**Pneumatic • 3-Finger Centric Gripper • Sealed Gripper**



## Gripping force, I.D. gripping

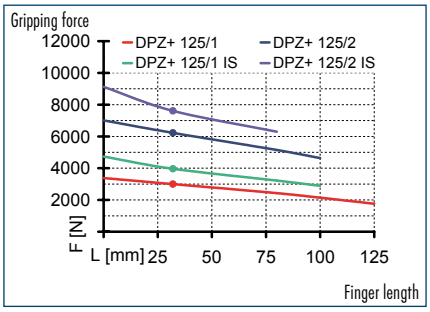


## Gripping force, O.D. gripping

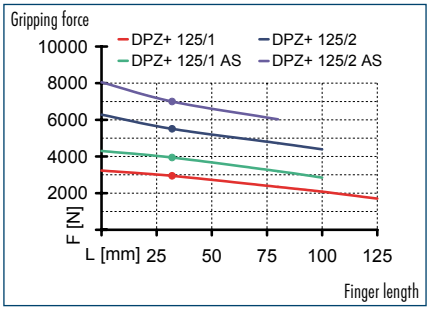


## Finger load

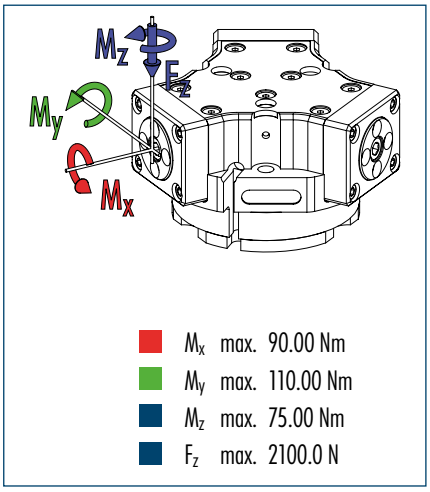


ⓘ The indicated moments and forces are static values, apply per base jaw and may occur simultaneously. $M_y$ may arise in addition to the moment generated by the gripping force itself. If the max. permitted finger weight is exceeded, it is imperative to throttle the air pressure so that the jaw movement occurs without any hitting or bouncing. Service life may be reduced.

## Technical data

| Description | | DPZ-plus 125-1 | DPZ-plus 125-2 | DPZ-plus 125-1-AS | DPZ-plus 125-2-AS | DPZ-plus 125-1-IS | DPZ-plus 125-2-IS |
|---|---|---|---|---|---|---|---|
| **ID** | | **0304441** | **0304442** | **0304443** | **0304444** | **0304445** | **0304446** |
| Stroke per finger | [mm] | 13 | 6 | 13 | 6 | 13 | 6 |
| Closing force | [N] | 2945 | 5510 | 3940 | 7000 | | |
| Opening force | [N] | 3000 | 6200 | | | 4015 | 8300 |
| Min. spring force | [N] | | | 995 | 1490 | 1015 | 2100 |
| Weight | [kg] | 3.5 | 3.5 | 4.7 | 4.7 | 4.7 | 4.7 |
| Recommended workpiece weight | [kg] | 14.7 | 27.5 | 14.7 | 27.5 | 14.7 | 27.5 |
| Air consumption per double stroke | [cm³] | 230 | 230 | 383 | 383 | 383 | 383 |
| Min./max. operating pressure | [bar] | 2.5/8 | 2.5/8 | 4/6.5 | 4/6.5 | 4/6.5 | 4/6.5 |
| Nominal operating pressure | [bar] | 6 | 6 | 6 | 6 | 6 | 6 |
| Closing/opening time | [s] | 0.25/0.25 | 0.25/0.25 | 0.22/0.45 | 0.22/0.45 | 0.45/0.22 | 0.45/0.22 |
| Max. permitted finger length | [mm] | 125 | 100 | 100 | 80 | 100 | 80 |
| Max. permitted weight per finger | [kg] | 1.75 | 1.75 | 1.75 | 1.75 | 1.75 | 1.75 |
| IP class | | 67 | 67 | 67 | 67 | 67 | 67 |
| Min./max. ambient temperature | [°C] | -10/90 | -10/90 | -10/90 | -10/90 | -10/90 | -10/90 |
| Repeat accuracy | [mm] | 0.01 | 0.01 | 0.01 | 0.01 | 0.01 | 0.01 |
| Cleanroom class ISO-classification 14644-1 | | 5 | 5 | 5 | 5 | 5 | 5 |

## Main view

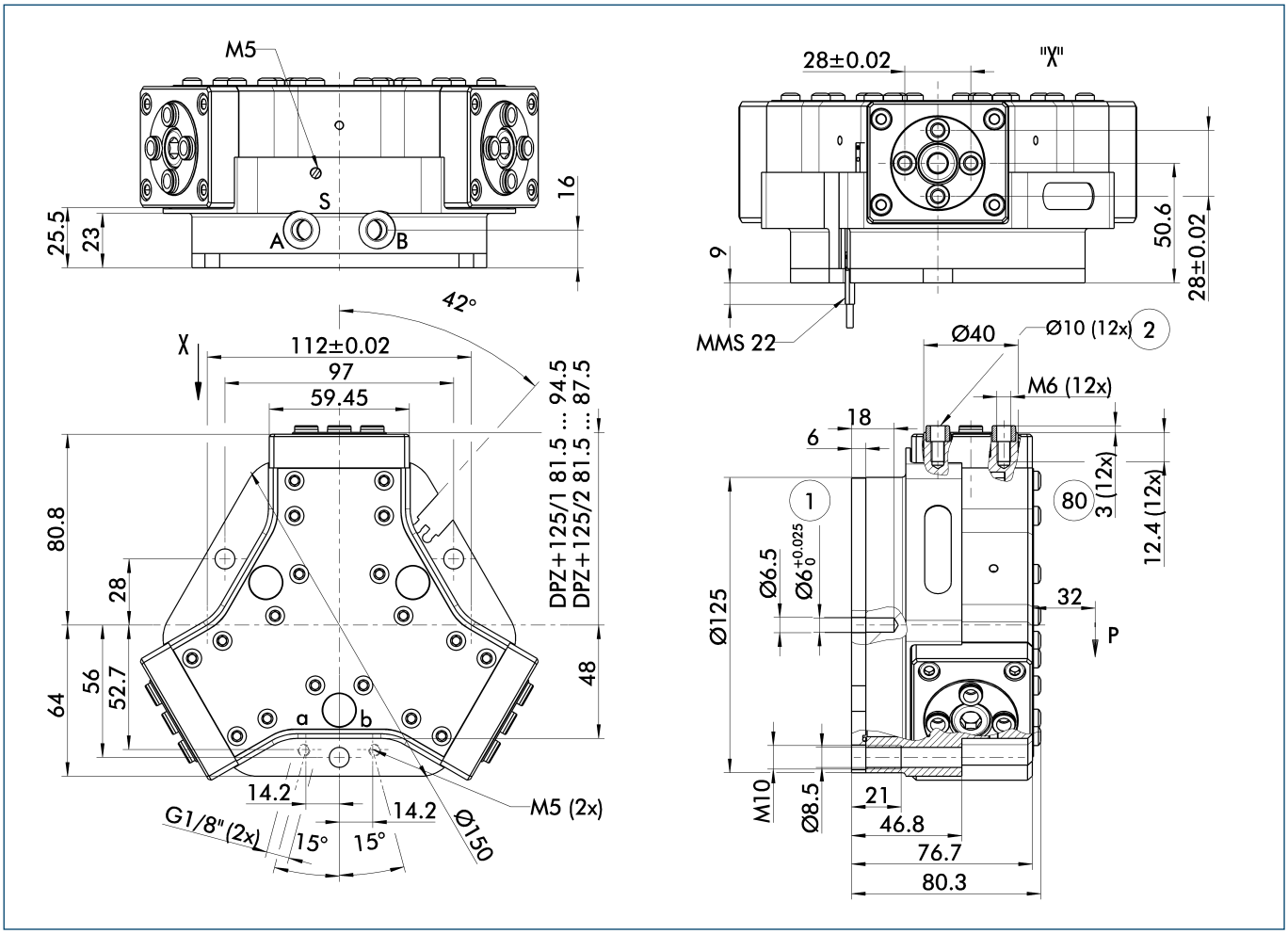


For finger connection, we recommend only to use two of the four centering bores for each finger. The drawing shows the gripper in the basic version with closed jaws, the dimensions do not include the options described below.

ⓘ The SDV-P pressure maintenance valve can also be used for I.D. or O.D. gripping alternatively or in addition to the spring-loaded, mechanical gripping force maintenance device (see "Accessories" catalog section).

A, a Main/direct connection, gripper opening
B, b Main/direct connection, gripper closing
S Air purge connection
① Gripper connection
② Finger connection
80 Depth of the centering sleeve hole in the matching part

## Hose-free direct connection

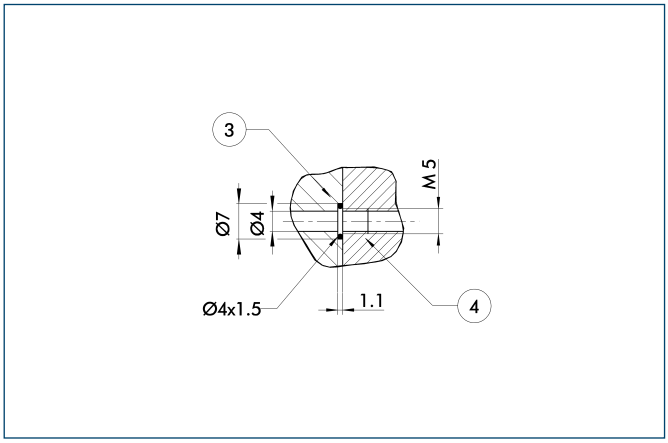


③ Adapter
④ Gripper

The direct connection is used for supplying compressed air without hoses. Instead, the pressure medium is fed through bore-holes in the mounting plate.

## AS/IS gripping force maintenance device

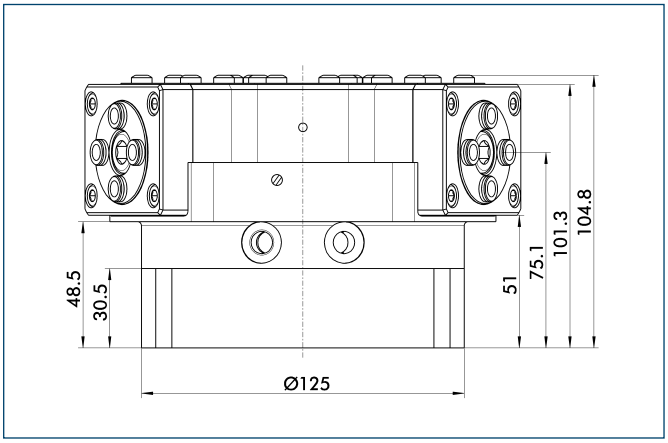


The mechanical gripping force maintenance device ensures a minimum gripping force even in case of pressure drop. This acts as closing force in the AS version, and as opening force in the IS version. In addition, the gripping force maintenance device can also be used for increasing the gripping force or for single-acting gripping.

## Proposed jaw design

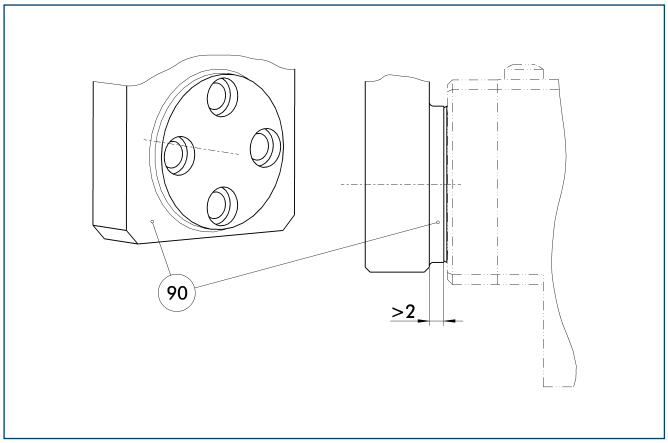


(90) Step

In order to avoid impairment of the stroke due to contamination or chips, there should be a sufficient distance between the top jaws and the gripper.

## Spring-loaded pressure piece

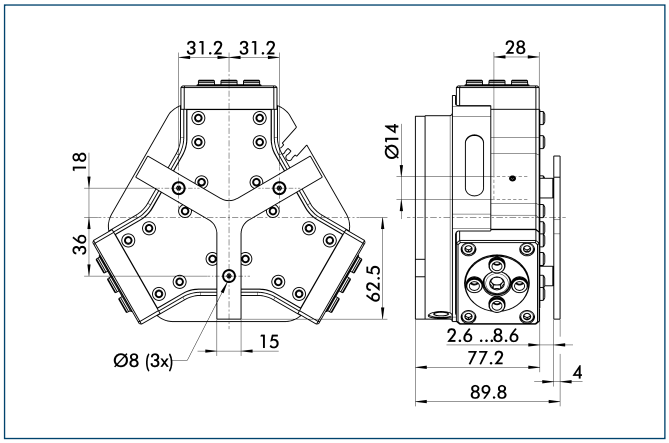


For spring-supported positioning of the workpiece against a stop after the gripper has opened. Especially developed for loading machines.

| Description | ID | Stroke | Min. force |
|---|---|---|---|
| Spring-loaded pressure piece | | | |
| A-PZN-plus/DPZ-plus 125 | **0303723** | 6 mm | 105 N |

## Intermediate Jaws

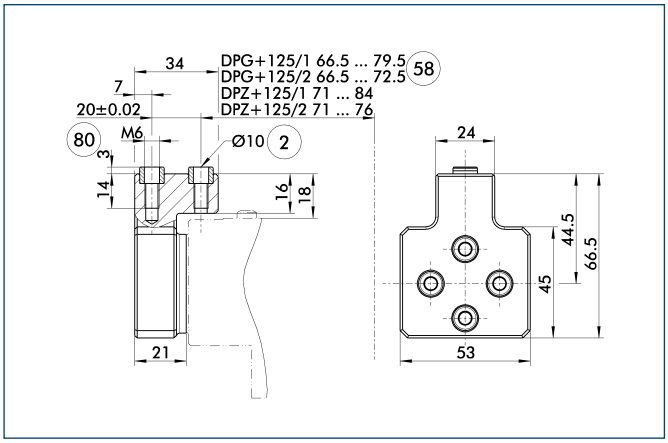


(2) Finger connection
(58) Distance from center of gripper
(80) Depth of the centering sleeve hole in the matching part

Optionally intermediate jaws can be used, enabling direct connection and alignment of top jaws and various standard accessories in Z-direction.

| Description | ID | Material | Scope of delivery |
|---|---|---|---|
| Intermediate Jaws | | | |
| ZBA-DPG-DPZ+125 | **0300195** | Aluminum | 1 |

## Tolerance compensation unit

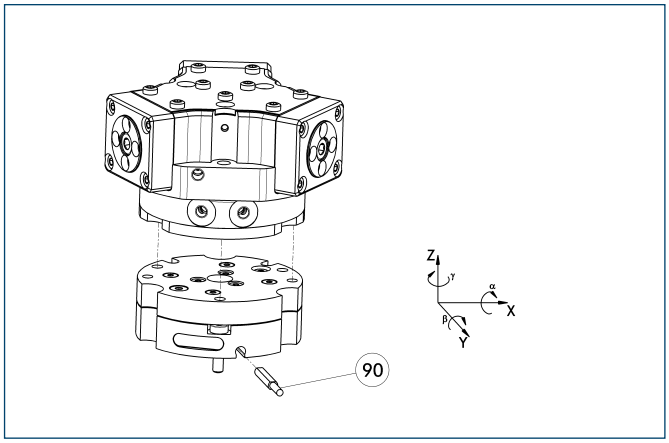


(90) Monitoring of locking

Grippers can be directly mounted without an adapter plate. Tolerance compensation unit and gripper have an identical screw connection diagram. Therefore the tolerance compensation units can be assembled later. Please consider the additional assembly height of the tolerance compensation unit. For details see catalog “Robot Accessories”.

| Description | ID | Locking | Deflection |
|---|---|---|---|
| Compensation unit | | | |
| TCU-125-3-MV-Z | **0324820** | Yes | |
| TCU-125-3-OV-Z | **0324821** | No | |

You can find more detailed information and individual parts of the above-mentioned accessories in the “Accessories” catalog section.

## Compensation unit with spring reset

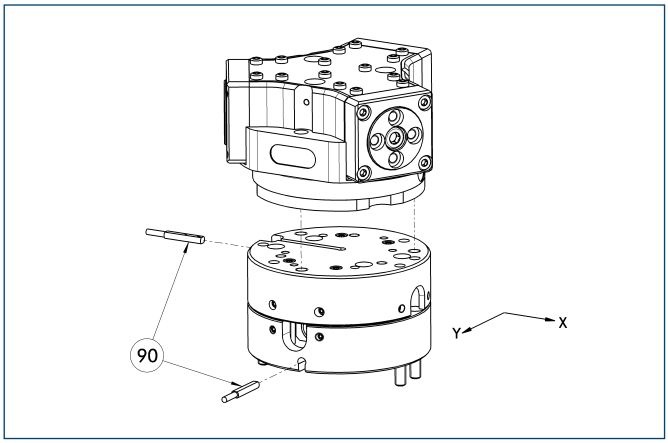


(90) Monitoring

Grippers can be directly mounted without using an adapter plate. For details see our catalog “Robot Accessories”.

| Description | ID | Compensation travel | Reset force |
|---|---|---|---|
| Compensation unit | | | |
| AGE-F-XY-080-1 | **0324960** | ±5 mm | 28.3 N |
| AGE-F-XY-080-2 | **0324961** | ±5 mm | 42.5 N |
| AGE-F-XY-080-3 | **0324962** | ±5 mm | 47.6 N |

## Programmable magnetic switch

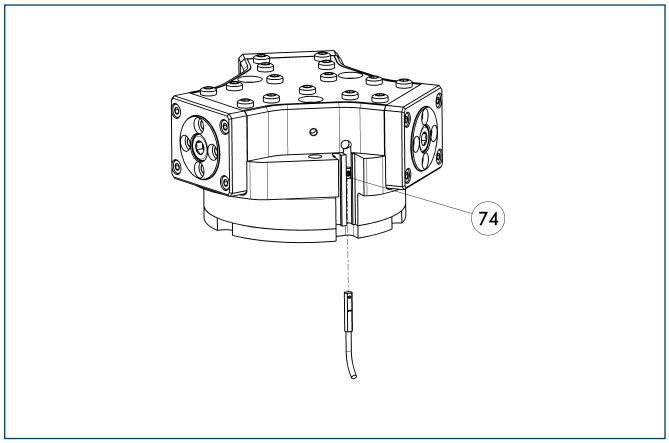


(74) Stop for MMS-P

Position monitoring with two programmable positions per sensor. The end position monitoring is mounted in the C-slot.

| Description | ID | Recommended product |
|---|---|---|
| Programmable magnetic switch | | |
| MMS-P 22-S-M8-PNP | **0301370** | • |
| MMSK-P 22-S-PNP | **0301371** | |
| Connection cables | | |
| KA BG08-L 4P-0500 | **0307767** | |
| KA BG08-L 4P-1000 | **0307768** | |
| KA BW08-L 4P-0500 | **0307765** | |
| KA BW08-L 4P-1000 | **0307766** | |
| Sensor Distributor | | |
| V2-M8-4P-2XM8-3P | **0301380** | |

ⓘ Please note the minimum permitted bending radii for the sensor cables, which are generally 35 mm.
ⓘ Per gripper one sensor (closer/NO) is required, optionally a cable extension.

You can find more detailed information and individual parts of the above-mentioned accessories in the “Accessories” catalog section.

## Electronic magnetic switches

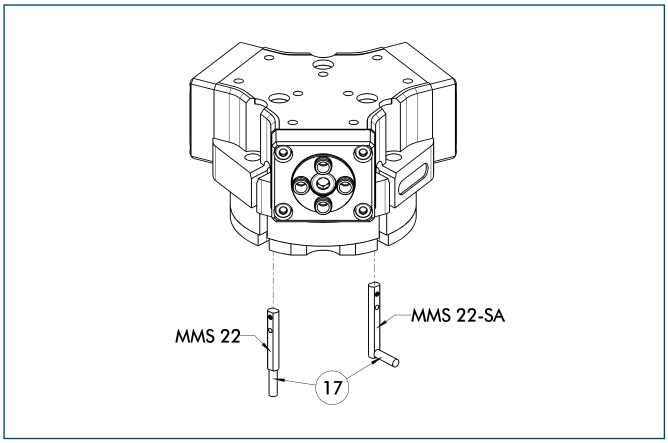


⑰ Cable outlet

End position monitoring for mounting in the C-slot

| Description | ID | Recommended product |
|---|---|---|
| Electronic magnetic switches | | |
| MMS 22-S-M5-PNP | **0301438** | |
| MMS 22-S-M5-NPN | **0301439** | |
| MMS 22-S-M8-PNP | **0301432** | • |
| MMS 22-S-M8-NPN | **0301433** | |
| MMSK 22-S-PNP | **0301434** | |
| MMSK 22-S-NPN | **0301435** | |
| Electronic magnetic switches with lateral cable outlet | | |
| MMS 22-S-M5-PNP-SA | **0301448** | |
| MMS 22-S-M5-NPN-SA | **0301449** | |
| MMS 22-S-M8-PNP-SA | **0301442** | • |
| MMS 22-S-M8-NPN-SA | **0301443** | |
| MMSK 22-S-PNP-SA | **0301444** | |
| MMSK 22-S-NPN-SA | **0301445** | |
| Reed Switches | | |
| RMS 22-S-M8 | **0377720** | • |
| Connection cables | | |
| KA BG05-L 3P-0300 | **0301652** | |
| KA BG08-L 3P-0300-PNP | **0301622** | |
| KA BG08-L 3P-0500-PNP | **0301623** | |
| KA BW05-L 3P-0300 | **0301650** | |
| KA BW08-L 3P-0300-NPN | **0301602** | |
| KA BW08-L 3P-0300-PNP | **0301594** | |
| KA BW08-L 3P-0500-NPN | **9641116** | |
| KA BW08-L 3P-0500-PNP | **0301502** | |
| Cable extensions | | |
| KV BW08-SG08 3P-0030-PNP | **0301495** | |
| KV BW08-SG08 3P-0100-PNP | **0301496** | |
| KV BW08-SG08 3P-0200-PNP | **0301497** | |

ⓘ Two sensors (closer/NO) are required for each gripper, plus extension cables as an option.

ⓘ Please note the minimum permitted bending radii for the sensor cables, which are generally 35 mm.

You can find more detailed information and individual parts of the above-mentioned accessories in the “Accessories” catalog section.

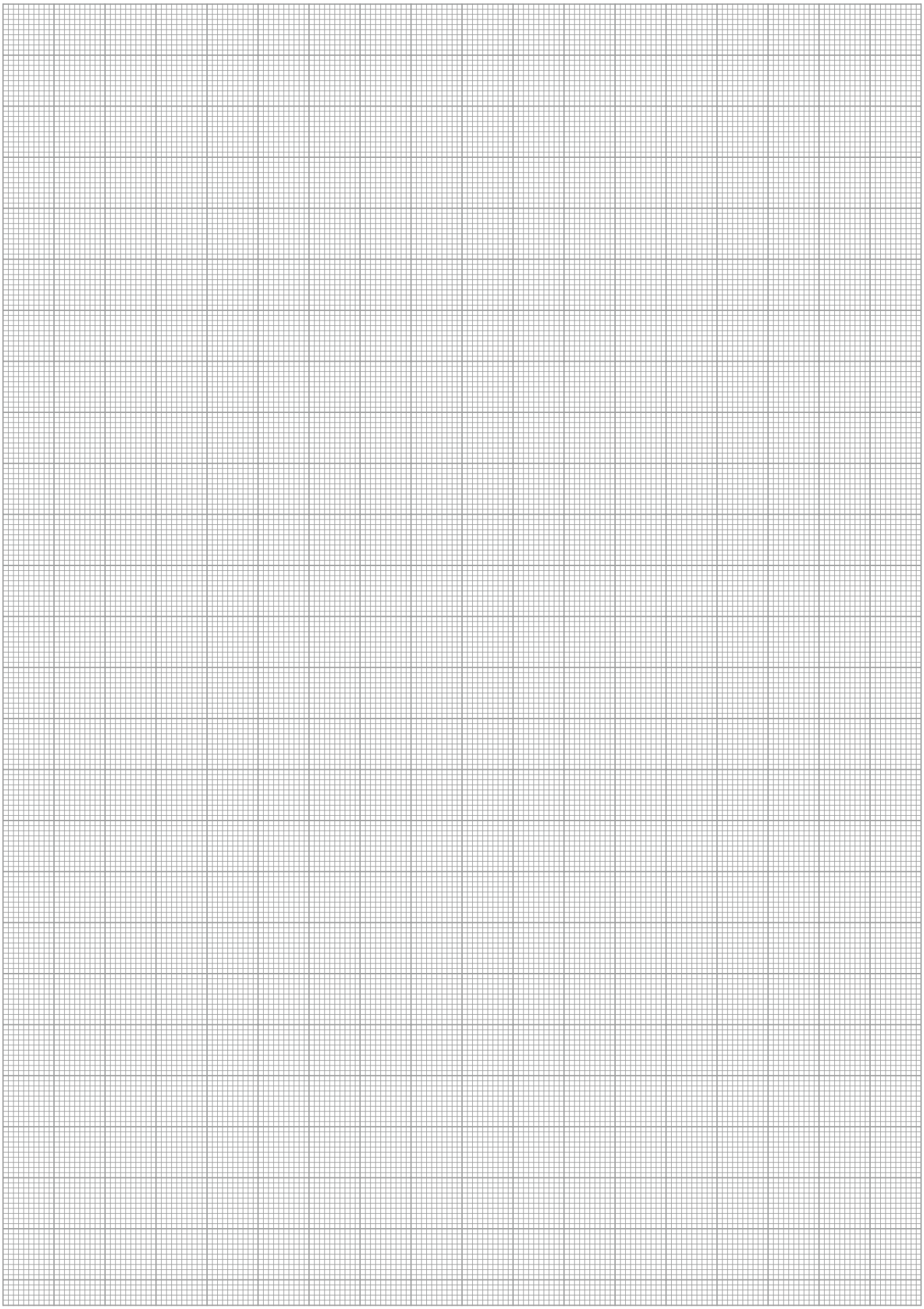

# DPZ-plus 160

**Pneumatic • 3-Finger Centric Gripper • Sealed Gripper**



## Gripping force, I.D. gripping

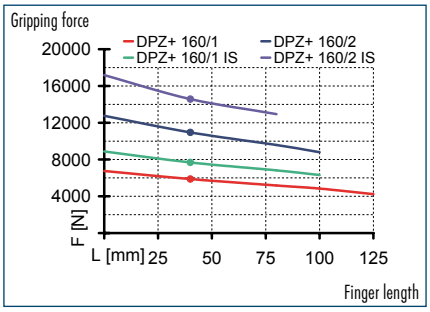


## Gripping force, O.D. gripping

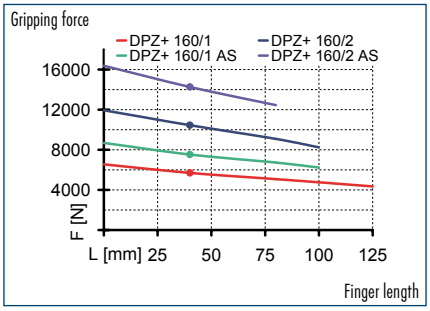


## Finger load

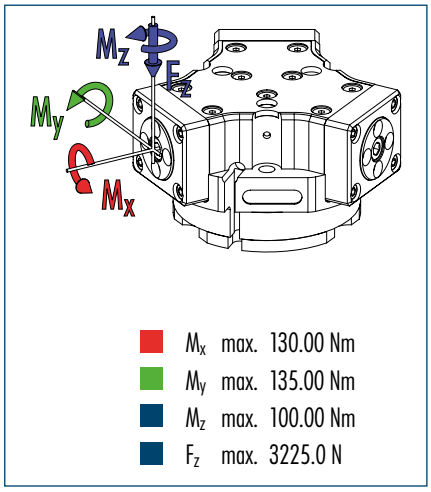


ⓘ The indicated moments and forces are static values, apply per base jaw and may occur simultaneously. $M_y$ may arise in addition to the moment generated by the gripping force itself. If the max. permitted finger weight is exceeded, it is imperative to throttle the air pressure so that the jaw movement occurs without any hitting or bouncing. Service life may be reduced.

## Technical data

| Description | | DPZ-plus 160-1 | DPZ-plus 160-2 | DPZ-plus 160-1-AS | DPZ-plus 160-2-AS | DPZ-plus 160-1-IS | DPZ-plus 160-2-IS |
|---|---|---|---|---|---|---|---|
| **ID** | | **0304451** | **0304452** | **0304453** | **0304454** | **0304455** | **0304456** |
| Stroke per finger | [mm] | 16 | 8 | 16 | 8 | 16 | 8 |
| Closing force | [N] | 5700 | 10450 | 7530 | 14260 | | |
| Opening force | [N] | 5880 | 10950 | | | 7865 | 15070 |
| Min. spring force | [N] | | | 1830 | 3810 | 1985 | 4120 |
| Weight | [kg] | 7.9 | 7.9 | 9.7 | 9.7 | 9.7 | 9.7 |
| Recommended workpiece weight | [kg] | 28.5 | 52 | 28.5 | 52 | 28.5 | 52 |
| Air consumption per double stroke | [cm³] | 520 | 520 | 875 | 875 | 875 | 875 |
| Min./max. operating pressure | [bar] | 2.5/8 | 2.5/8 | 4/6.5 | 4/6.5 | 4/6.5 | 4/6.5 |
| Nominal operating pressure | [bar] | 6 | 6 | 6 | 6 | 6 | 6 |
| Closing/opening time | [s] | 0.6/0.6 | 0.6/0.6 | 0.5/1 | 0.5/1 | 1/0.5 | 1/0.5 |
| Max. permitted finger length | [mm] | 125 | 100 | 100 | 80 | 100 | 80 |
| Max. permitted weight per finger | [kg] | 3 | 3 | 3 | 3 | 3 | 3 |
| IP class | | 67 | 67 | 67 | 67 | 67 | 67 |
| Min./max. ambient temperature | [°C] | -10/90 | -10/90 | -10/90 | -10/90 | -10/90 | -10/90 |
| Repeat accuracy | [mm] | 0.02 | 0.02 | 0.02 | 0.02 | 0.02 | 0.02 |
| Cleanroom class ISO-classification 14644-1 | | 5 | 5 | 5 | 5 | 5 | 5 |

## Main view

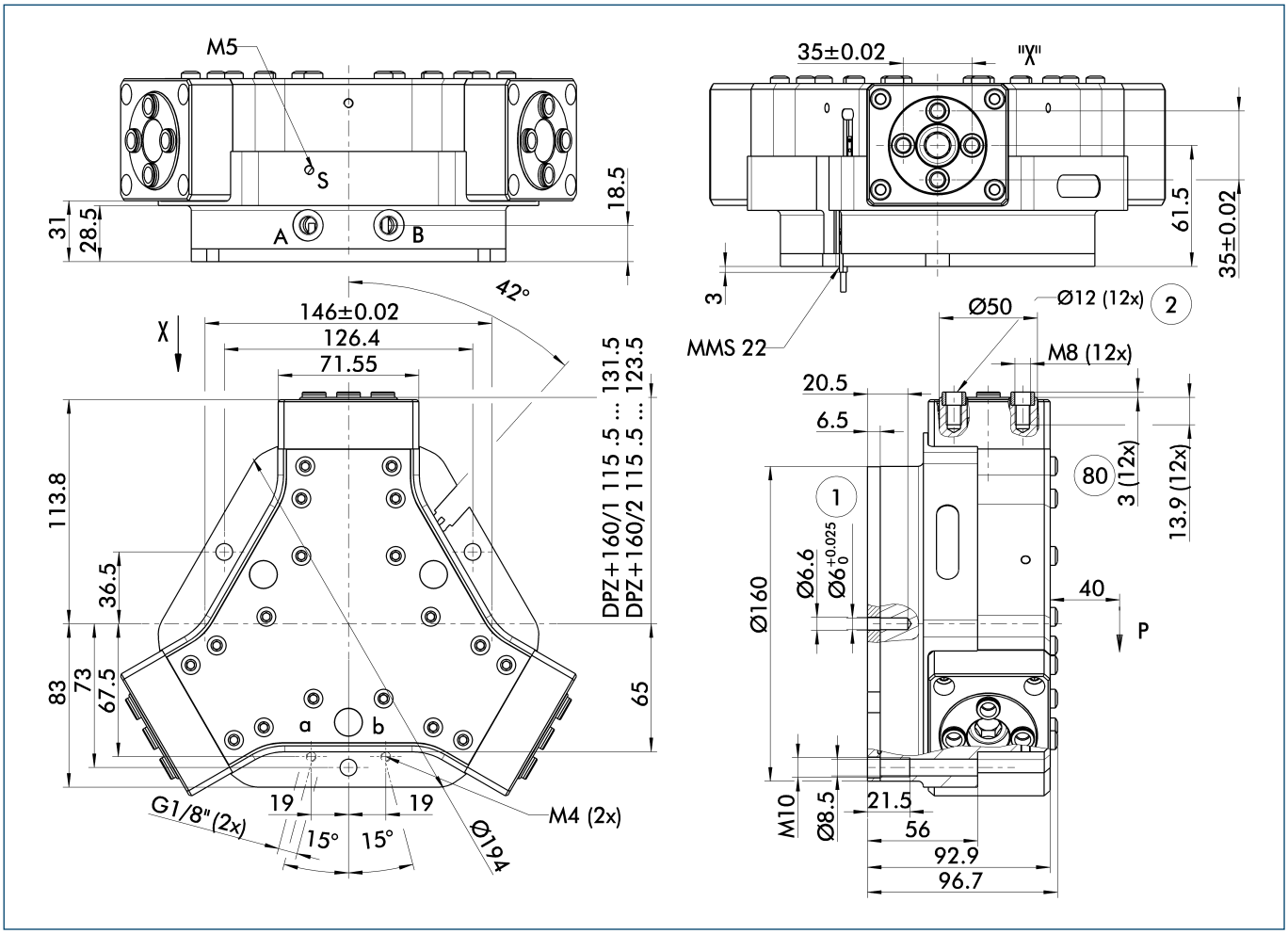


For finger connection, we recommend only to use two of the four centering bores for each finger. The drawing shows the gripper in the basic version with closed jaws, the dimensions do not include the options described below.

ⓘ The SDV-P pressure maintenance valve can also be used for I.D. or O.D. gripping alternatively or in addition to the spring-loaded, mechanical gripping force maintenance device (see "Accessories" catalog section).

A, a Main/direct connection, gripper opening
B, b Main/direct connection, gripper closing
S Air purge connection
① Gripper connection
② Finger connection
(80) Depth of the centering sleeve hole in the matching part

## Hose-free direct connection

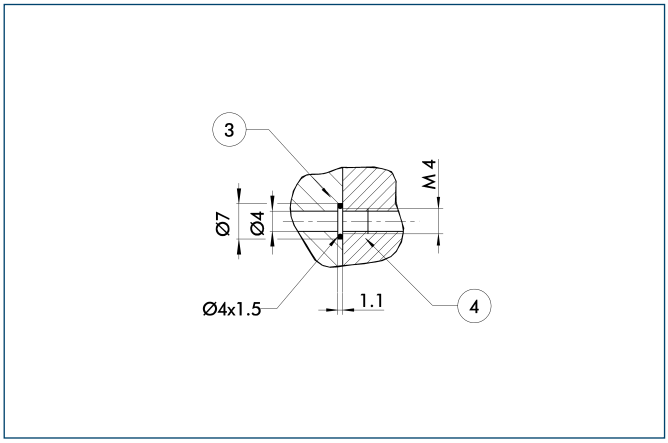


③ Adapter
④ Gripper

The direct connection is used for supplying compressed air without hoses. Instead, the pressure medium is fed through bore-holes in the mounting plate.

## AS/IS gripping force maintenance device

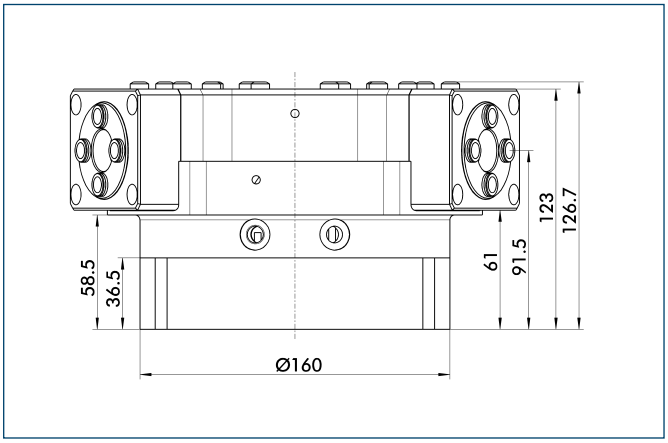


The mechanical gripping force maintenance device ensures a minimum gripping force even in case of pressure drop. This acts as closing force in the AS version, and as opening force in the IS version. In addition, the gripping force maintenance device can also be used for increasing the gripping force or for single-acting gripping.

## Proposed jaw design

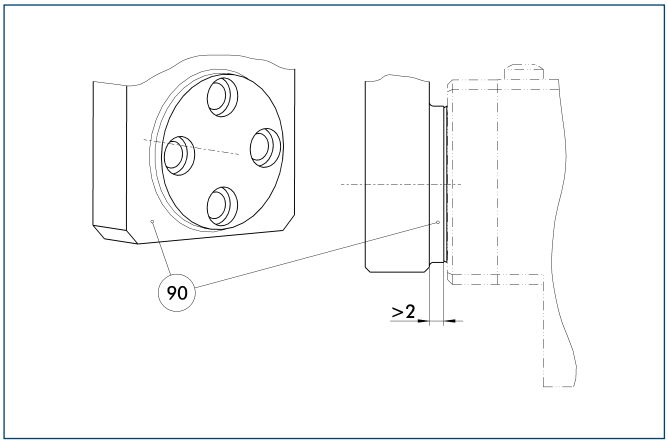


(90) Step

In order to avoid impairment of the stroke due to contamination or chips, there should be a sufficient distance between the top jaws and the gripper.

## Spring-loaded pressure piece

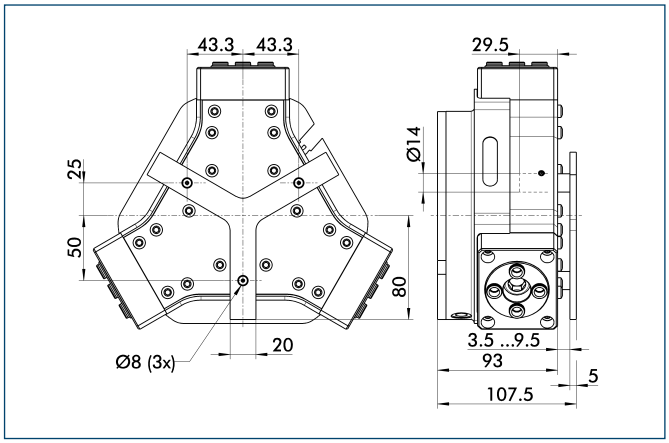


For spring-supported positioning of the workpiece against a stop after the gripper has opened. Especially developed for loading machines.

| Description | ID | Stroke | Min. force |
|---|---|---|---|
| Spring-loaded pressure piece | | | |
| A-PZN-plus/DPZ-plus 160 | **0303724** | 6 mm | 205 N |

## Intermediate Jaws

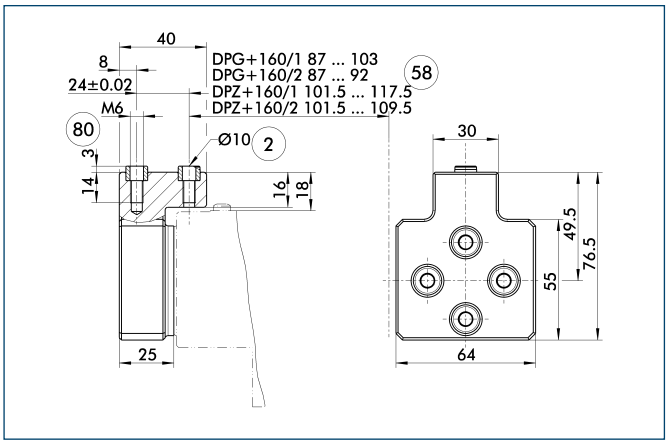


(2) Finger connection
(58) Distance from center of gripper
(80) Depth of the centering sleeve hole in the matching part

Optionally intermediate jaws can be used, enabling direct connection and alignment of top jaws and various standard accessories in Z-direction.

| Description | ID | Material | Scope of delivery |
|---|---|---|---|
| Intermediate Jaws | | | |
| ZBA-DPG-DPZ+160 | **0300196** | Aluminum | 1 |

## Tolerance compensation unit

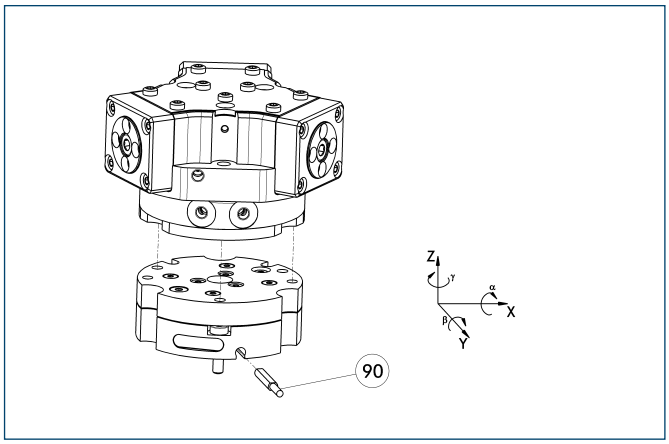


(90) Monitoring of locking

Grippers can be directly mounted without an adapter plate. Tolerance compensation unit and gripper have an identical screw connection diagram. Therefore the tolerance compensation units can be assembled later. Please consider the additional assembly height of the tolerance compensation unit. For details see catalog “Robot Accessories”.

| Description | ID | Locking | Deflection |
|---|---|---|---|
| Compensation unit | | | |
| TCU-160-3-MV-Z | **0324838** | Yes | |
| TCU-160-3-OV-Z | **0324839** | No | |

You can find more detailed information and individual parts of the above-mentioned accessories in the “Accessories” catalog section.

## Programmable magnetic switch

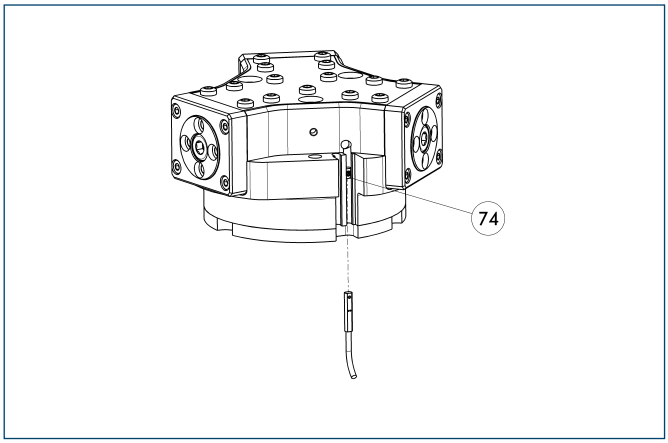


(74) Stop for MMS-P

Position monitoring with two programmable positions per sensor. The end position monitoring is mounted in the C-slot.

| Description | ID | Recommended product |
|---|---|---|
| Programmable magnetic switch | | |
| MMS-P 22-S-M8-PNP | **0301370** | • |
| MMSK-P 22-S-PNP | **0301371** | |
| Connection cables | | |
| KA BG08-L 4P-0500 | **0307767** | |
| KA BG08-L 4P-1000 | **0307768** | |
| KA BW08-L 4P-0500 | **0307765** | |
| KA BW08-L 4P-1000 | **0307766** | |
| Sensor Distributor | | |
| V2-M8-4P-2XM8-3P | **0301380** | |

ⓘ Please note the minimum permitted bending radii for the sensor cables, which are generally 35 mm.
ⓘ Per gripper one sensor (closer/NO) is required, optionally a cable extension.

## Electronic magnetic switches

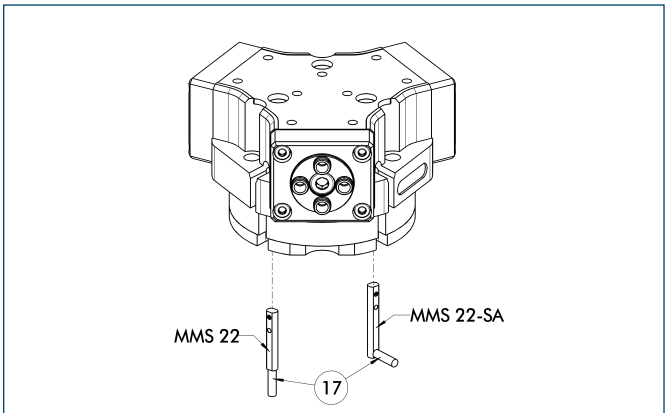


(17) Cable outlet

End position monitoring for mounting in the C-slot

| Description | ID | Recommended product |
|---|---|---|
| Electronic magnetic switches | | |
| MMS 22-S-M5-PNP | **0301438** | |
| MMS 22-S-M5-NPN | **0301439** | |
| MMS 22-S-M8-PNP | **0301432** | • |
| MMS 22-S-M8-NPN | **0301433** | |
| MMSK 22-S-PNP | **0301434** | |
| MMSK 22-S-NPN | **0301435** | |
| Electronic magnetic switches with lateral cable outlet | | |
| MMS 22-S-M5-PNP-SA | **0301448** | |
| MMS 22-S-M5-NPN-SA | **0301449** | |
| MMS 22-S-M8-PNP-SA | **0301442** | • |
| MMS 22-S-M8-NPN-SA | **0301443** | |
| MMSK 22-S-PNP-SA | **0301444** | |
| MMSK 22-S-NPN-SA | **0301445** | |
| Reed Switches | | |
| RMS 22-S-M8 | **0377720** | • |
| Connection cables | | |
| KA BG05-L 3P-0300 | **0301652** | |
| KA BG08-L 3P-0300-PNP | **0301622** | |
| KA BG08-L 3P-0500-PNP | **0301623** | |
| KA BW05-L 3P-0300 | **0301650** | |
| KA BW08-L 3P-0300-NPN | **0301602** | |
| KA BW08-L 3P-0300-PNP | **0301594** | |
| KA BW08-L 3P-0500-NPN | **9641116** | |
| KA BW08-L 3P-0500-PNP | **0301502** | |
| Cable extensions | | |
| KV BW08-SG08 3P-0030-PNP | **0301495** | |
| KV BW08-SG08 3P-0100-PNP | **0301496** | |
| KV BW08-SG08 3P-0200-PNP | **0301497** | |

ⓘ Two sensors (closer/NO) are required for each gripper, plus extension cables as an option.
ⓘ Please note the minimum permitted bending radii for the sensor cables, which are generally 35 mm.

You can find more detailed information and individual parts of the above-mentioned accessories in the “Accessories” catalog section.

# DPZ-plus 200

**Pneumatic • 3-Finger Centric Gripper • Sealed Gripper**



## Gripping force, I.D. gripping

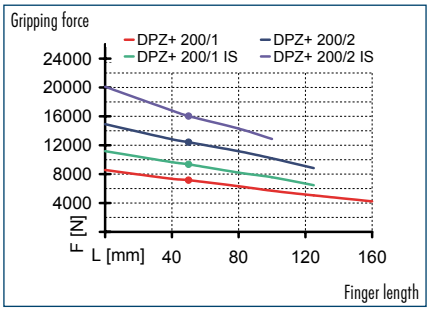


## Gripping force, O.D. gripping

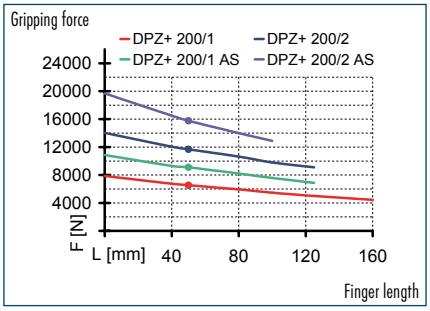


## Finger load

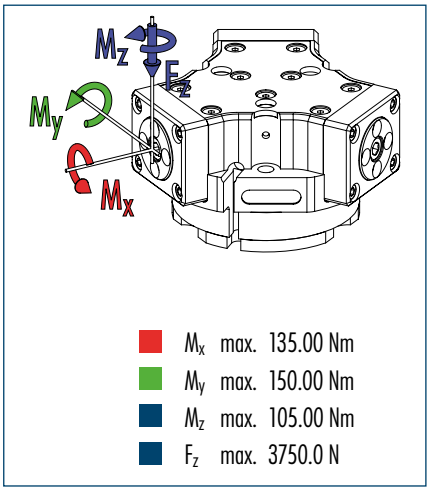


ⓘ The indicated moments and forces are static values, apply per base jaw and may occur simultaneously. $M_y$ may arise in addition to the moment generated by the gripping force itself. If the max. permitted finger weight is exceeded, it is imperative to throttle the air pressure so that the jaw movement occurs without any hitting or bouncing. Service life may be reduced.

## Technical data

| Description | | DPZ-plus 200-1 | DPZ-plus 200-2 | DPZ-plus 200-1-AS | DPZ-plus 200-2-AS | DPZ-plus 200-1-IS | DPZ-plus 200-2-IS |
|---|---|---|---|---|---|---|---|
| **ID** | | **0304461** | **0304462** | **0304463** | **0304464** | **0304465** | **0304466** |
| Stroke per finger | [mm] | 25 | 14 | 25 | 14 | 25 | 14 |
| Closing force | [N] | 6750 | 12060 | 9300 | 16500 | | |
| Opening force | [N] | 7160 | 12410 | | | 9910 | 17150 |
| Min. spring force | [N] | | | 2550 | 4440 | 2750 | 4740 |
| Weight | [kg] | 15.6 | 15.6 | 20.1 | 20.1 | 20.1 | 20.1 |
| Recommended workpiece weight | [kg] | 33.5 | 60 | 33.5 | 60 | 33.5 | 60 |
| Air consumption per double stroke | [cm³] | 1040 | 1040 | 1725 | 1725 | 1725 | 1725 |
| Min./max. operating pressure | [bar] | 2.5/8 | 2.5/8 | 4/6.5 | 4/6.5 | 4/6.5 | 4/6.5 |
| Nominal operating pressure | [bar] | 6 | 6 | 6 | 6 | 6 | 6 |
| Closing/opening time | [s] | 1.5/1.5 | 1.5/1.5 | 1.2/1.8 | 1.2/1.8 | 1.8/1.2 | 1.8/1.2 |
| Max. permitted finger length | [mm] | 160 | 125 | 125 | 100 | 125 | 100 |
| Max. permitted weight per finger | [kg] | 5.5 | 5.5 | 5.5 | 5.5 | 5.5 | 5.5 |
| IP class | | 67 | 67 | 67 | 67 | 67 | 67 |
| Min./max. ambient temperature | [°C] | -10/90 | -10/90 | -10/90 | -10/90 | -10/90 | -10/90 |
| Repeat accuracy | [mm] | 0.05 | 0.05 | 0.05 | 0.05 | 0.05 | 0.05 |
| Cleanroom class ISO-classification 14644-1 | | 5 | 5 | 5 | 5 | 5 | 5 |

## Main view

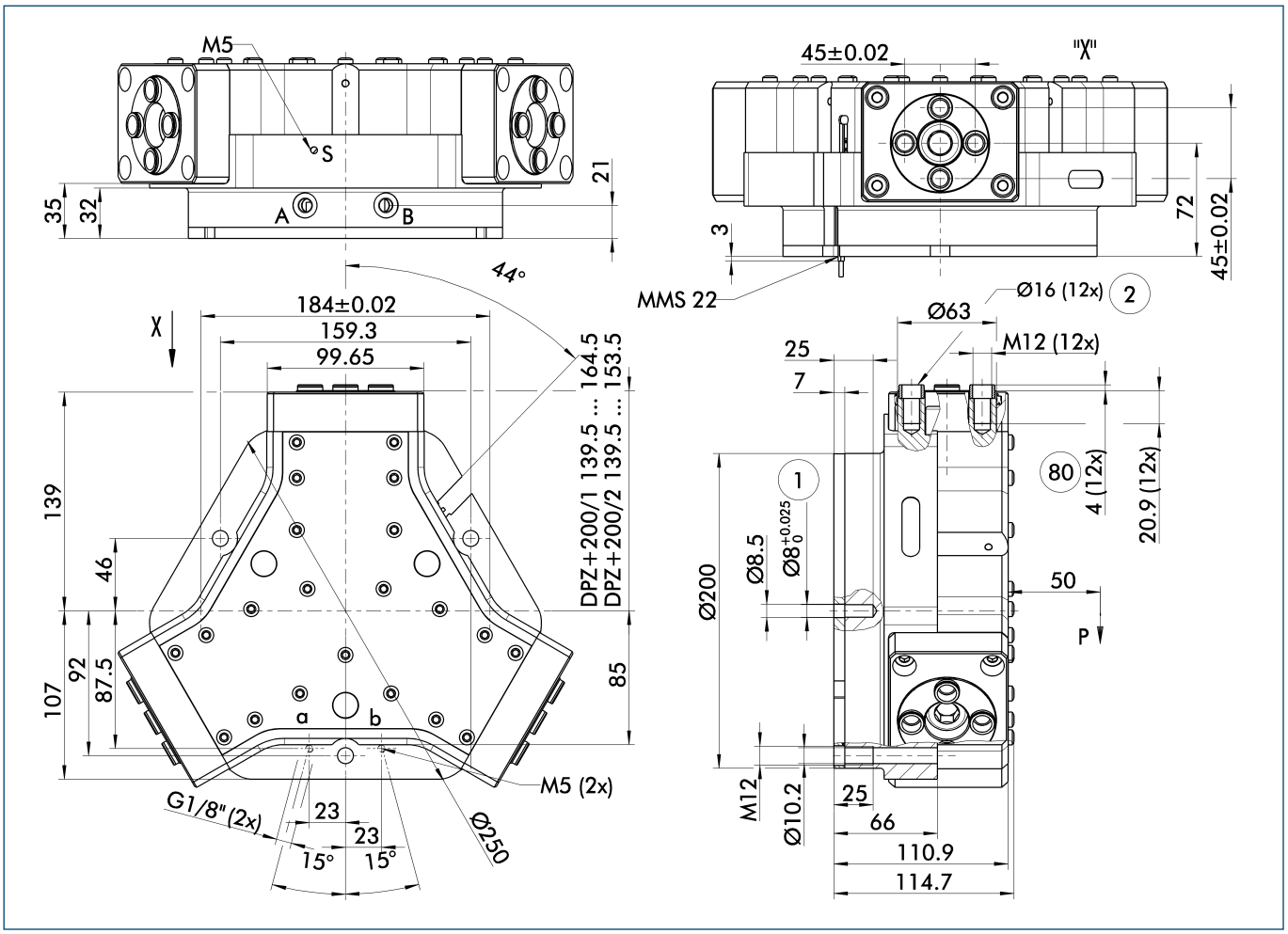


For finger connection, we recommend only to use two of the four centering bores for each finger. The drawing shows the gripper in the basic version with closed jaws, the dimensions do not include the options described below.

ⓘ The SDV-P pressure maintenance valve can also be used for I.D. or O.D. gripping alternatively or in addition to the spring-loaded, mechanical gripping force maintenance device (see "Accessories" catalog section).

A, a Main/direct connection, gripper opening
B, b Main/direct connection, gripper closing
S Air purge connection
① Gripper connection
② Finger connection
80 Depth of the centering sleeve hole in the matching part

## Hose-free direct connection

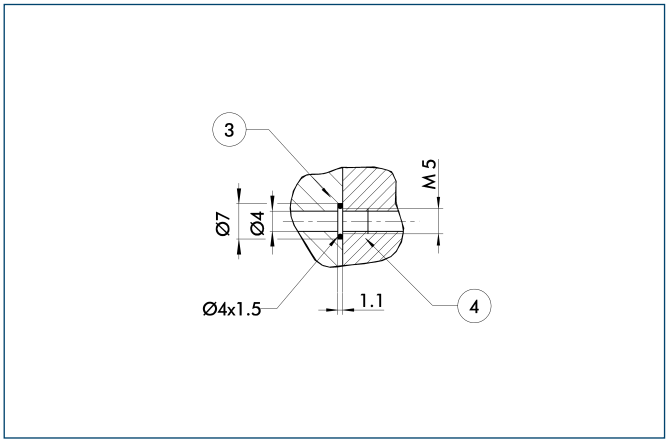


③ Adapter
④ Gripper

The direct connection is used for supplying compressed air without hoses. Instead, the pressure medium is fed through bore-holes in the mounting plate.

## AS/IS gripping force maintenance device

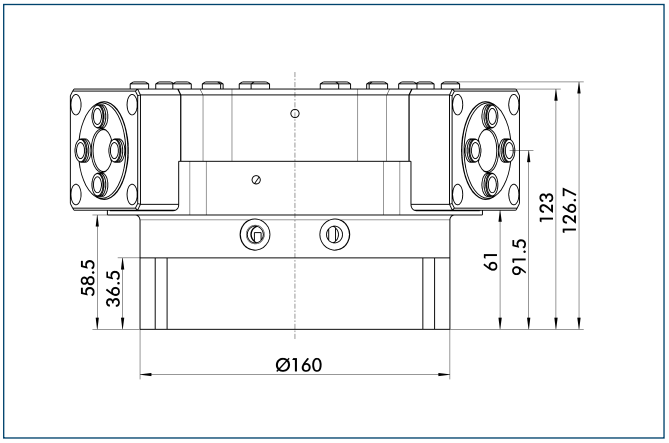


The mechanical gripping force maintenance device ensures a minimum gripping force even in case of pressure drop. This acts as closing force in the AS version, and as opening force in the IS version. In addition, the gripping force maintenance device can also be used for increasing the gripping force or for single-acting gripping.

## Proposed jaw design

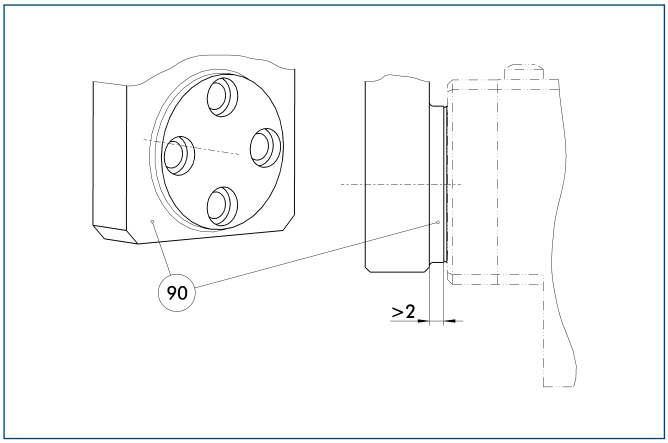


(90) Step

In order to avoid impairment of the stroke due to contamination or chips, there should be a sufficient distance between the top jaws and the gripper.

## Spring-loaded pressure piece

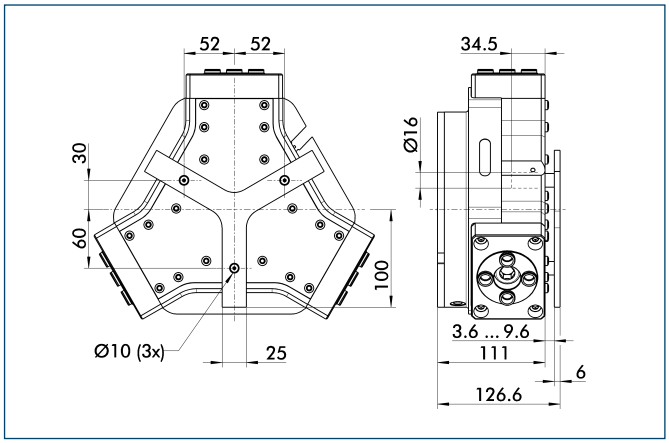


For spring-supported positioning of the workpiece against a stop after the gripper has opened. Especially developed for loading machines.

| Description | ID | Stroke | Min. force |
|---|---|---|---|
| Spring-loaded pressure piece | | | |
| A-PZN-plus/DPZ-plus 200 | **0303725** | 6 mm | 247 N |

## Tolerance compensation unit

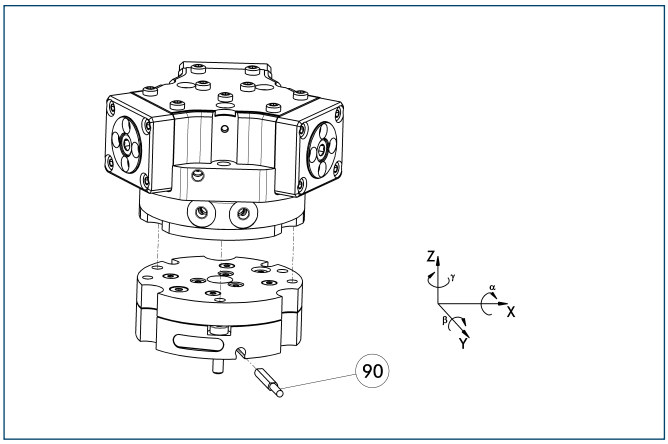


(90) Monitoring of locking

Grippers can be directly mounted without an adapter plate. Tolerance compensation unit and gripper have an identical screw connection diagram. Therefore the tolerance compensation units can be assembled later. Please consider the additional assembly height of the tolerance compensation unit. For details see catalog “Robot Accessories”.

| Description | ID | Locking | Deflection |
|---|---|---|---|
| Compensation unit | | | |
| TCU-200-3-MV-Z | **0324856** | Yes | |
| TCU-200-3-OV-Z | **0324857** | No | |

## Programmable magnetic switch

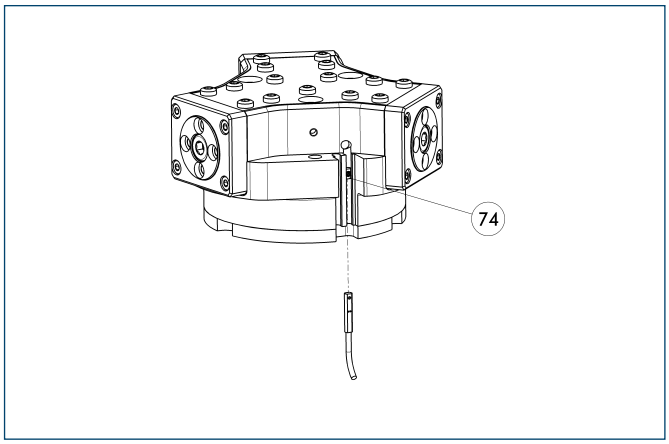


(74) Stop for MMS-P

Position monitoring with two programmable positions per sensor. The end position monitoring is mounted in the C-slot.

| Description | ID | Recommended product |
|---|---|---|
| Programmable magnetic switch | | |
| MMS-P 22-S-M8-PNP | **0301370** | • |
| MMSK-P 22-S-PNP | **0301371** | |
| Connection cables | | |
| KA BG08-L 4P-0500 | **0307767** | |
| KA BG08-L 4P-1000 | **0307768** | |
| KA BW08-L 4P-0500 | **0307765** | |
| KA BW08-L 4P-1000 | **0307766** | |
| Sensor Distributor | | |
| V2-M8-4P-2XM8-3P | **0301380** | |

ⓘ Please note the minimum permitted bending radii for the sensor cables, which are generally 35 mm.

ⓘ Per gripper one sensor (closer/NO) is required, optionally a cable extension.

You can find more detailed information and individual parts of the above-mentioned accessories in the “Accessories” catalog section.

## Electronic magnetic switches

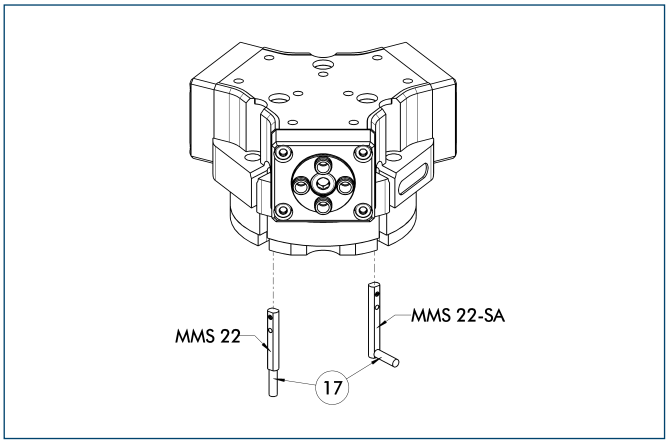


⑰ Cable outlet

End position monitoring for mounting in the C-slot

| Description | ID | Recommended product |
|---|---|---|
| Electronic magnetic switches | | |
| MMS 22-S-M5-PNP | **0301438** | |
| MMS 22-S-M5-NPN | **0301439** | |
| MMS 22-S-M8-PNP | **0301432** | • |
| MMS 22-S-M8-NPN | **0301433** | |
| MMSK 22-S-PNP | **0301434** | |
| MMSK 22-S-NPN | **0301435** | |
| Electronic magnetic switches with lateral cable outlet | | |
| MMS 22-S-M5-PNP-SA | **0301448** | |
| MMS 22-S-M5-NPN-SA | **0301449** | |
| MMS 22-S-M8-PNP-SA | **0301442** | • |
| MMS 22-S-M8-NPN-SA | **0301443** | |
| MMSK 22-S-PNP-SA | **0301444** | |
| MMSK 22-S-NPN-SA | **0301445** | |
| Reed Switches | | |
| RMS 22-S-M8 | **0377720** | • |
| Connection cables | | |
| KA BG05-L 3P-0300 | **0301652** | |
| KA BG08-L 3P-0300-PNP | **0301622** | |
| KA BG08-L 3P-0500-PNP | **0301623** | |
| KA BW05-L 3P-0300 | **0301650** | |
| KA BW08-L 3P-0300-NPN | **0301602** | |
| KA BW08-L 3P-0300-PNP | **0301594** | |
| KA BW08-L 3P-0500-NPN | **9641116** | |
| KA BW08-L 3P-0500-PNP | **0301502** | |
| Cable extensions | | |
| KV BW08-SG08 3P-0030-PNP | **0301495** | |
| KV BW08-SG08 3P-0100-PNP | **0301496** | |
| KV BW08-SG08 3P-0200-PNP | **0301497** | |

ⓘ Two sensors (closer/NO) are required for each gripper, plus extension cables as an option.

ⓘ Please note the minimum permitted bending radii for the sensor cables, which are generally 35 mm.

You can find more detailed information and individual parts of the above-mentioned accessories in the “Accessories” catalog section.

# Pneumatic Gripping Modules

## Pneumatic • Multi-Finger Concentric Gripper

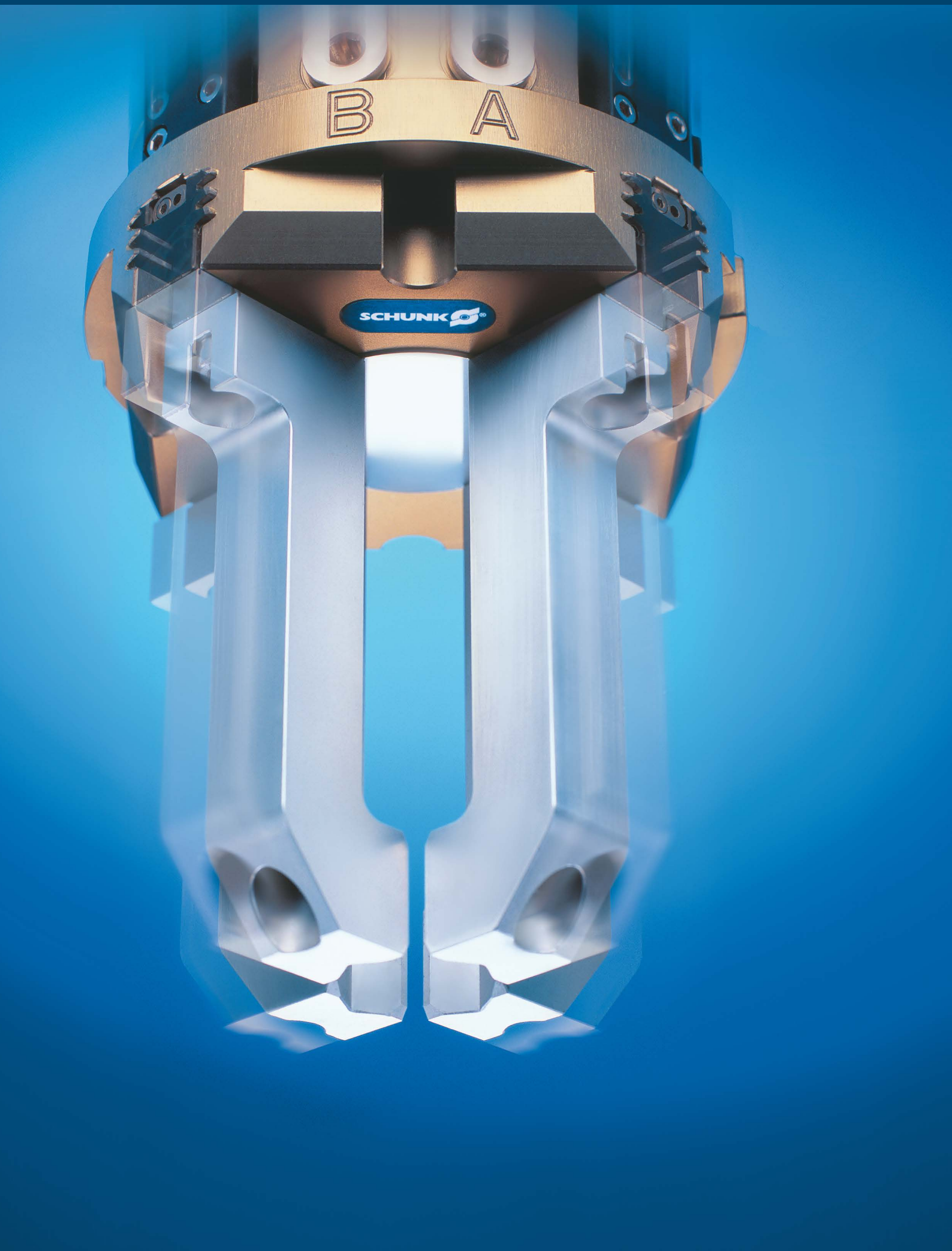

MULTI-FINGER CONCENTRIC GRIPPER


| Series | Size | Page |
|---|---|---|
| **Multi-Finger Concentric Gripper** | | |
| PZV | | 840 |
| PZV | 64 | 844 |
| PZV | 100 | 850 |
| PZV | 125 | 858 |
| PZV | 160 | 866 |
| PZV | 200 | 874 |

# PZV



**Sizes**
64 ... 200

**Weight**
0.5 kg ... 10 kg

**Gripping force**
570 N ... 6900 N

**Stroke per finger**
4 mm ... 16 mm

**Workpiece weight**
2.8 kg ... 34.5 kg

## Application example

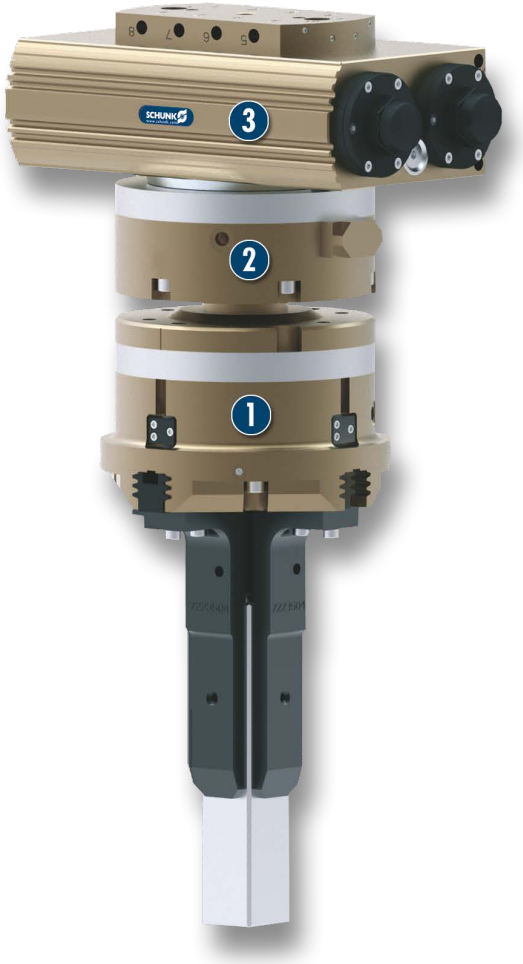


Centering and rotating unit for the precise picking up, orientation and subsequent joining of square materials

1. Multi-Finger Gripper PZV
2. OPS collision and overload protection device
3. Rotary Actuator SRU-plus

## 4-Finger Concentric Gripper

The multi-finger gripper for applications in which two or three fingers are insufficient.

## Field of application

4-finger concentric grippers have advantages over the usual concentric grippers, for example when cylindrical workpieces are being magazined in tablets. The PZV handles the workpieces in a controlled, process reliable manner despite the interfering contours.

## Your advantages and benefits

**Robust multi-tooth guidance**
for precise handling

**Wedge-hook design**
for high power transmission and synchronized gripping

**Air supply via hose-free direct connection or screw connections**
for the flexible supply of compressed air in all automation systems

**Comprehensive sensor accessory program**
for versatile interrogation possibilities and control of stroke position

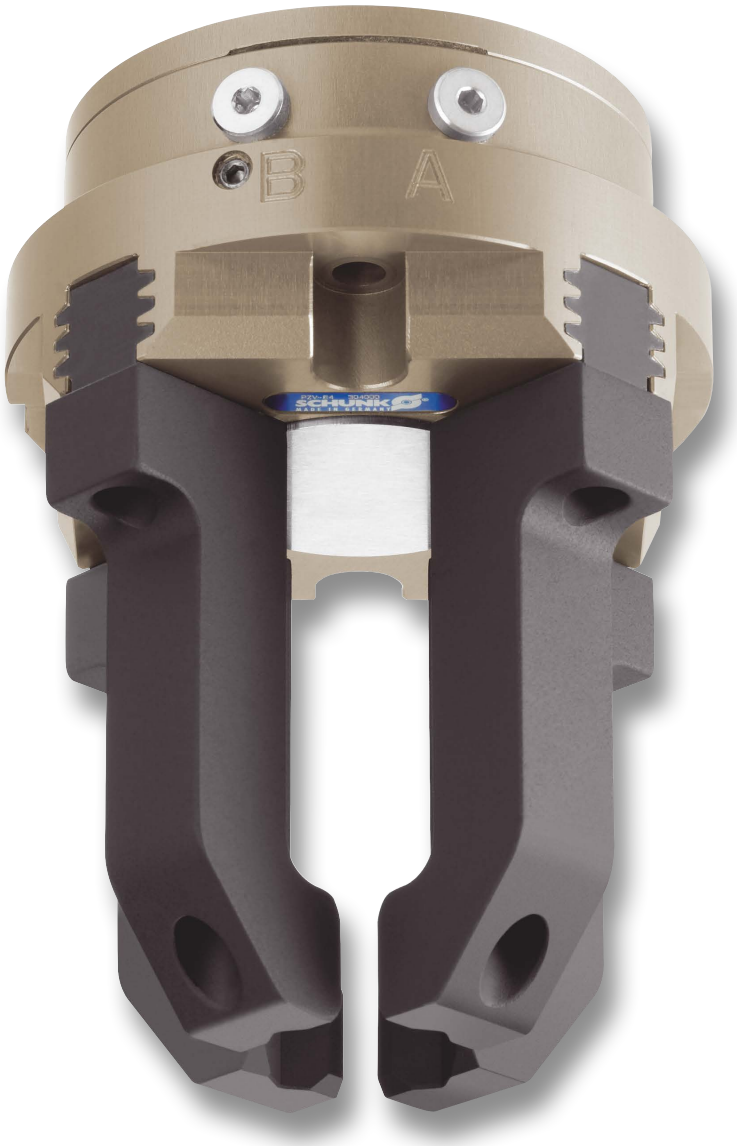


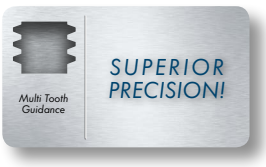


## General note to the series

**Principle of function**
Wedge-hook kinematics

**Housing material**
Aluminum alloy, hard-anodized

**Base jaw material**
Steel

**Actuation**
pneumatic, with filtered compressed air (10 microns): dry, lubricated or non-lubricated
Pressure medium: Required quality class of compressed air according to DIN ISO 8573-1: 6 4 4

**Warranty**
36 months (details, general terms and conditions and operation manuals can be downloaded under www.schunk.com)

**Scope of delivery**
Brackets for proximity switches, centering sleeves, O-rings for direct connection, assembly and operating manual with manufacturer's declaration

## Sectional diagram

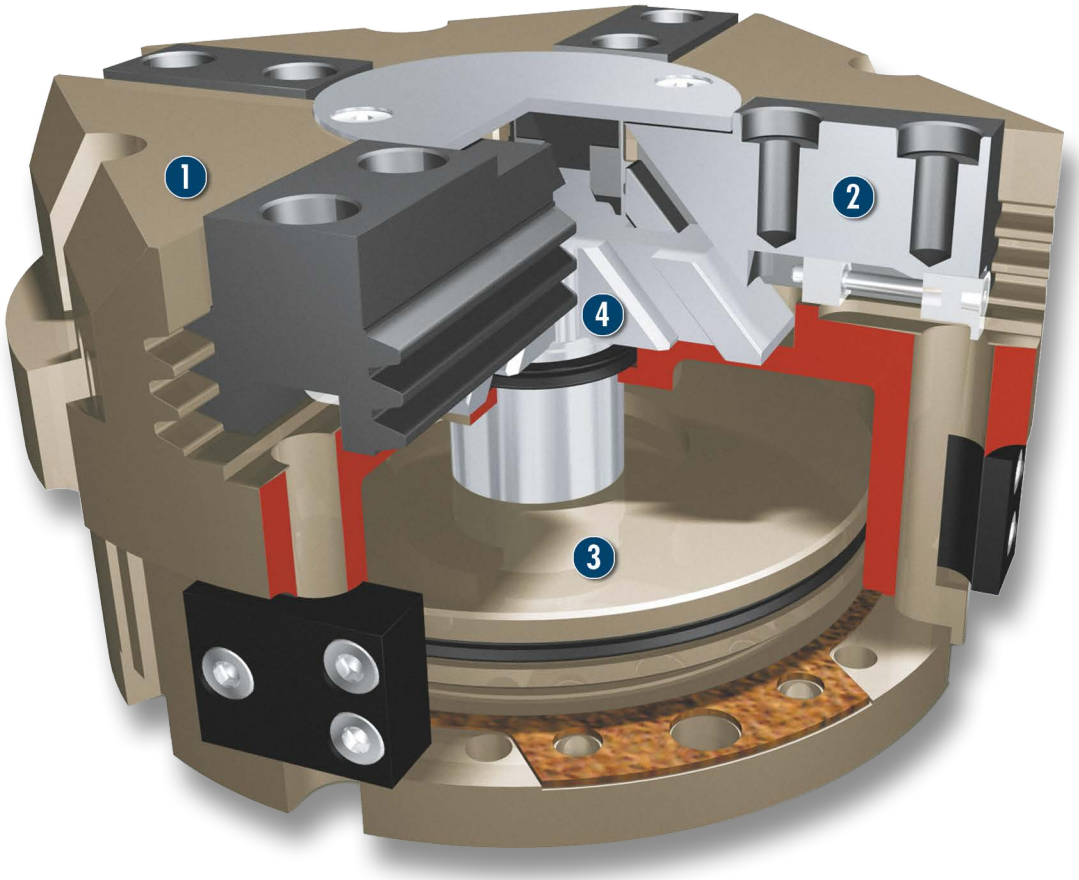


**1 Housing**
weight-optimized through application of hard-anodized, high-strength aluminum alloy

**2 Multiple-tooth guidance**
for mounting high loads onto the base jaw

**3 Drive**
through pneumatic double piston system

**4 Wedge-hook design**
for high power transmission and centric gripping

## Functional description

The piston is moved up and down by compressed air.
Through its angled active surfaces, the wedge hook transforms this movement into the lateral, synchronous gripping movement of both base jaws.

## Options and special information

Intermediate sizes are available on request. Please note that the four-finger grip is an umbrella term, and may constitute a two or three-finger grip in certain cases.

### Pressure reduction by using two fingers

If the PZV is used as a double 2-finger parallel gripper (gripping with only 2 of the 4 fingers), in sizes PZV 160 and PZV 200 the pressure must be reduced to max. 5 bar.

## Accessories

Accessories from SCHUNK – the suitable supplement for maximum functionality, reliability and performance of all automation modules.

### Centering sleeves



### Fittings



### Magnetic Switches



### Inductive proximity switches



### Quick-change Jaw System






### Sensor cables



### Gripper pads

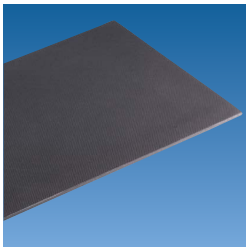

### Sensor Distributor

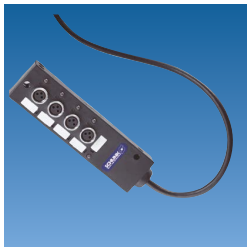

### Pressure maintenance valve



### Finger blanks



### Force measuring jaws



### Flexible Position Sensor

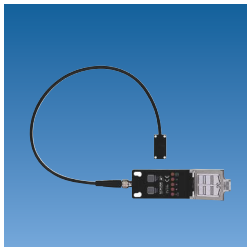

ⓘ For the exact size of the required accessories, availability of this size and the designation and ID, please refer to the additional views at the end of the size in question. You will find more detailed information on our accessory range in the “Accessories” catalog section.

## General note to the series

### Gripping force

is the arithmetic total of the gripping force applied to each finger at distance P (see illustration) measured from the upper edge of the gripper.

### Finger length

The finger length is measured from the upper edge of the gripper housing in the direction of the main axis.

### Repeat accuracy

is defined as the spread of the limit position after 100 consecutive strokes.

### Workpiece weight

The recommended workpiece weight is calculated for a force-type connection with a coefficient of friction of 0.1 and a safety factor of 2 against slippage of the workpiece on acceleration due to gravity g. Considerably heavier workpiece weights are permitted with form-fit gripping.

### Closing and opening times

Closing and opening times are purely the times that the base jaws or fingers are in motion. Valve switching times, hose filling times or PLC reaction times are not included in the above times and must be taken into consideration when determining cycle times.

# PZV 64



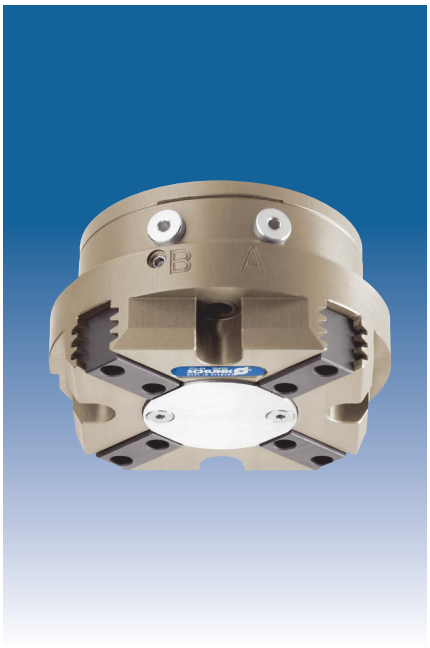

## Gripping force, I.D. gripping

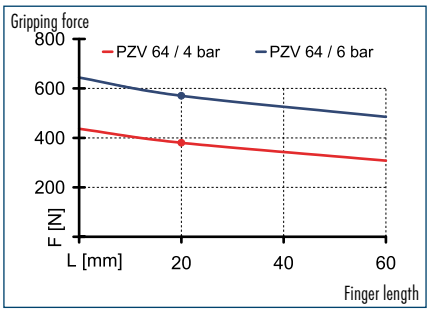


## Gripping force, O.D. gripping

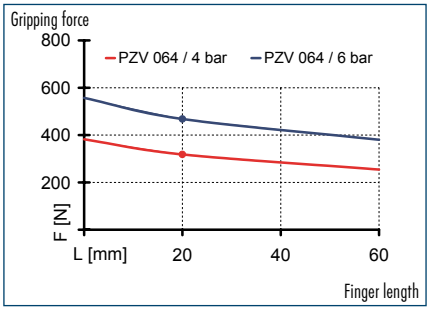


## Finger load

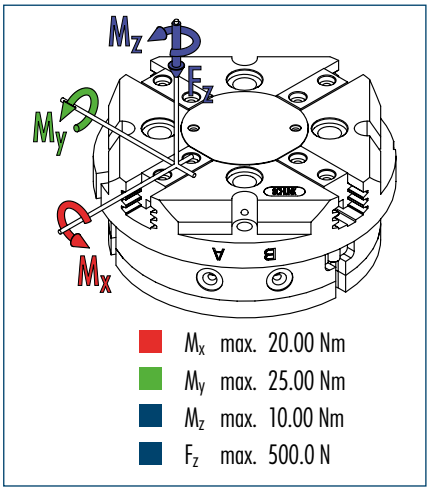


ⓘ The indicated moments and forces are static values, apply per base jaw and may occur simultaneously. $M_y$ may arise in addition to the moment generated by the gripping force itself. If the max. permitted finger weight is exceeded, it is imperative to throttle the air pressure so that the jaw movement occurs without any hitting or bouncing. Service life may be reduced.

## Technical data

| Description | | PZV 64 |
|---|---|---|
| **ID** | | **0304000** |
| Stroke per finger | [mm] | 4 |
| Closing force | [N] | 570 |
| Opening force | [N] | 630 |
| Weight | [kg] | 0.5 |
| Recommended workpiece weight | [kg] | 2.8 |
| Air consumption per double stroke | [cm³] | 25 |
| Min./max. operating pressure | [bar] | 2/8 |
| Nominal operating pressure | [bar] | 6 |
| Closing/opening time | [s] | 0.02/0.02 |
| Max. permitted finger length | [mm] | 64 |
| Max. permitted weight per finger | [kg] | 0.18 |
| IP class | | 40 |
| Min./max. ambient temperature | [°C] | -10/90 |
| Repeat accuracy | [mm] | 0.01 |

## Main view

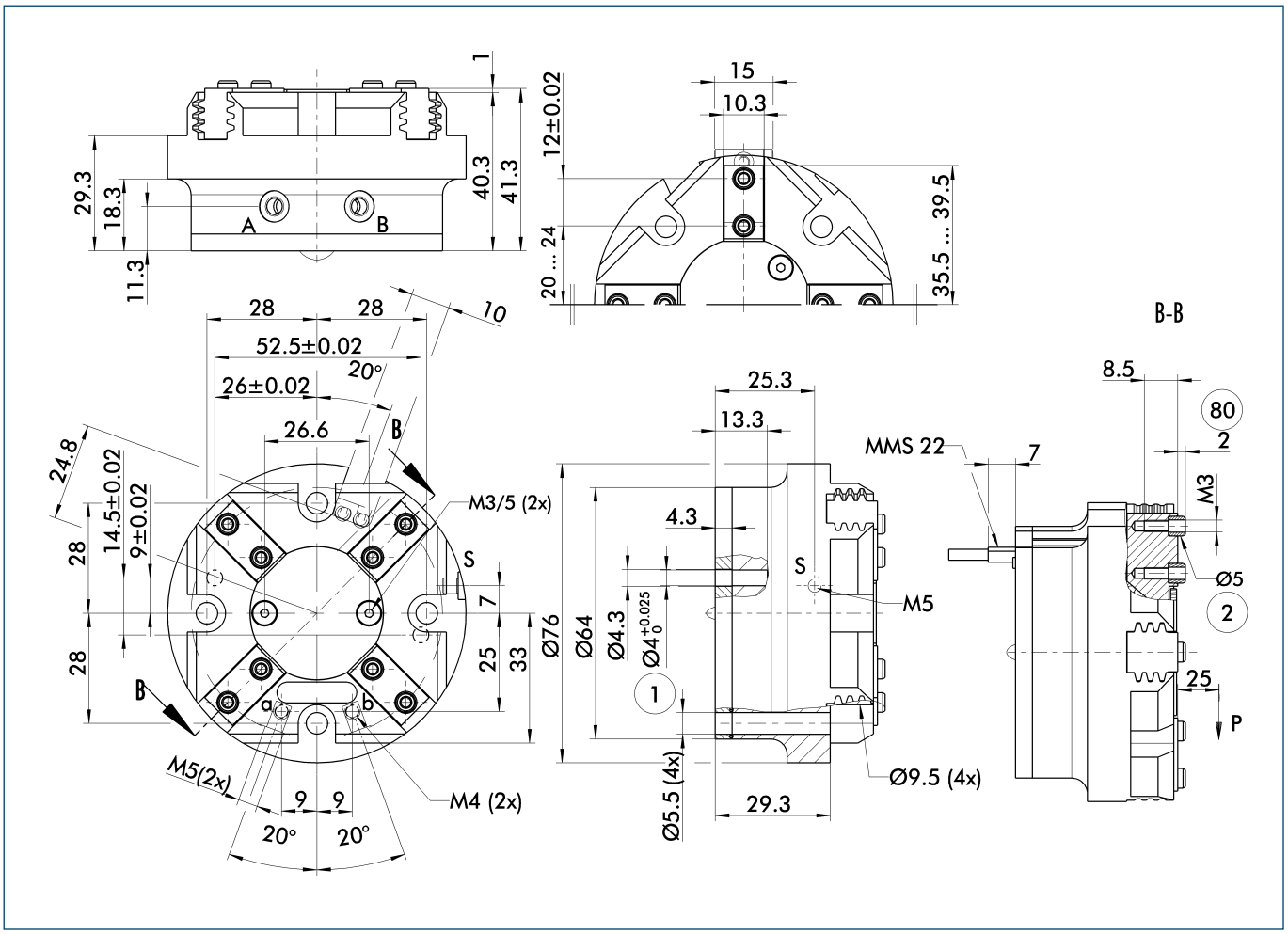


The drawing shows the gripper in the basic version with closed jaws, the dimensions do not include the options described below.

ⓘ The SDV-P pressure maintenance valve can be used as a gripping force maintenance device (see "Accessories" catalog section).

A, a Main/direct connection, gripper opening
B, b Main/direct connection, gripper closing
S Air purge connection
① Gripper connection
② Finger connection
(80) Depth of the centering sleeve hole in the matching part

## Hose-free direct connection

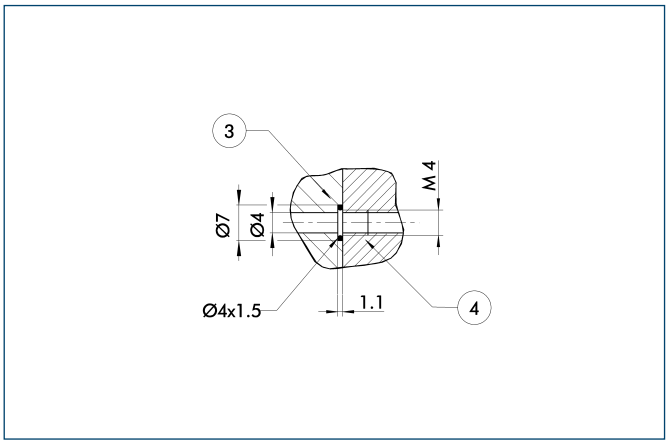


③ Adapter
④ Gripper

The direct connection is used for supplying compressed air without hoses. Instead, the pressure medium is fed through bore-holes in the mounting plate.

## Quick-change Jaw System

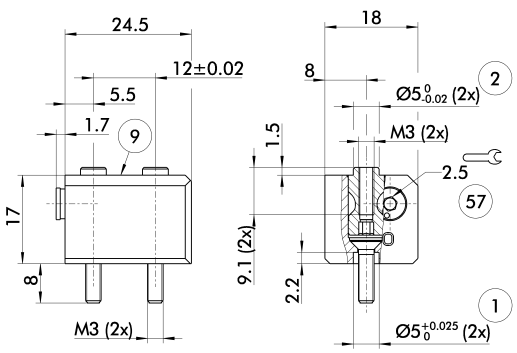


① Gripper connection
② Finger connection
⑨ For mounting screw connection diagram, see basic version
⑤⑦ Locking

The BSWS quick-change jaw system enables top jaws to be changed on the gripper manually and rapidly. An adapter (BSWS-A) and a base (BSWS-B) are required for each gripper jaw.
For a reverse assembly without height set-up, one adapter (BSWS-A) and a kit (BSWS-U) per gripper jaw are required. Another effect of the BSWS-U is, that there are no disturbing fastening bores in the finger contour.

| Description | ID |
|---|---|
| Quick-change Jaw System adapter | |
| BSWS-A 50 | **0303020** |
| Quick-change Jaw System base | |
| BSWS-B 50 | **0303021** |
| Quick-change Jaw System reversed | |
| BSWS-U 50 | **0303040** |

## Universal intermediate jaw

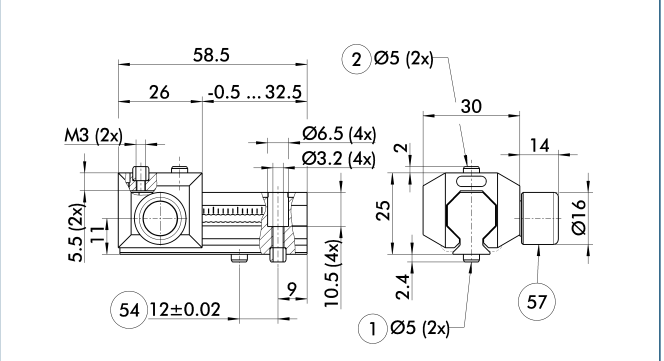


① Gripper connection
② Finger connection
⑤④ Optional right or left connection
⑤⑦ Locking

The universal intermediate jaw allows fast tool-free and reliable plugging and shifting of top jaws at the gripper.

| Description | ID | Grid dimension |
|---|---|---|
| Universal intermediate jaw | | |
| UZB 50 | **0300041** | 1.5 mm |

ⓘ The slide UZB-S can be removed completely and has to be ordered separately. Moreover, it allows a fast jaw change.

You can find more detailed information and individual parts of the above-mentioned accessories in the “Accessories” catalog section.

## Force measuring jaws

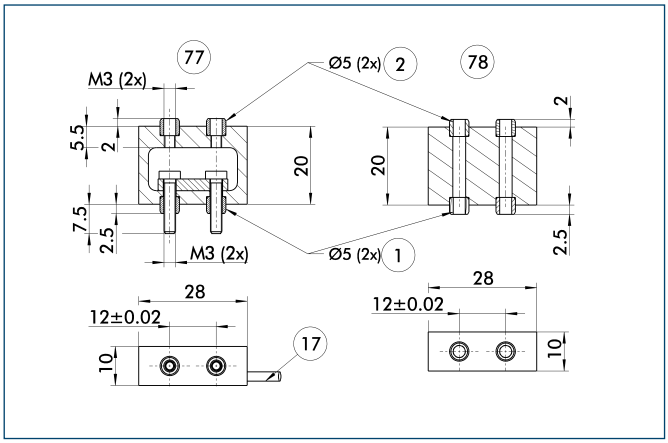


① Gripper connection
② Finger connection
⑰ Cable outlet
⑦⑦ Active intermediate jaws
⑦⑧ Passive intermediate jaws

Force measuring jaws measure gripping forces, but can also determine workpiece weights or dimensional deviations. There are active and passive intermediate jaws (FMS-ZBA or FMS-ZBP). At least one active force measuring jaw is required per gripper, the rest can be passive. For each active jaw, a FMS-A1 control unit and a FMS-A connection cable are required.

| Description | ID |
|---|---|
| Active intermediate jaws | |
| FMS-ZBA 50 | **0301830** |
| Passive intermediate jaws | |
| FMS-ZBP 50 | **0301831** |
| Electronic Processor | |
| FMS-A1 | **0301810** |
| Connection cables | |
| FMS-AK0200 | **0301820** |
| FMS-AK0500 | **0301821** |
| FMS-AK1000 | **0301822** |
| FMS-AK2000 | **0301823** |

## Finger blanks

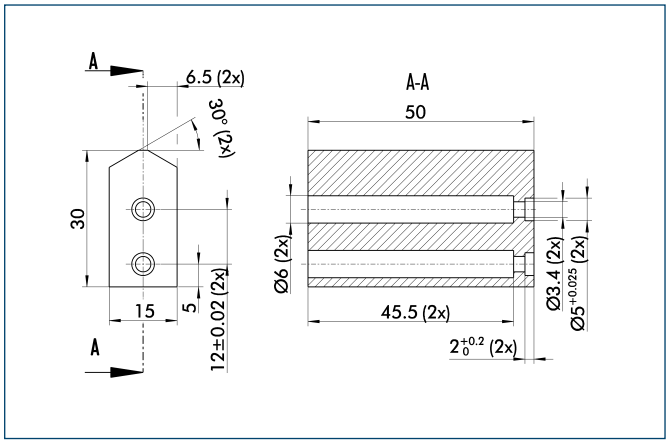


Finger blanks for customized subsequent machining

| Description | ID | Material | Scope of delivery |
|---|---|---|---|
| Finger blanks | | | |
| ABR-plus 50 | **0300009** | Aluminum | 1 |
| SBR-plus 50 | **0300019** | 16 MnCr 5 | 1 |

You can find more detailed information and individual parts of the above-mentioned accessories in the “Accessories” catalog section.

## Programmable magnetic switch

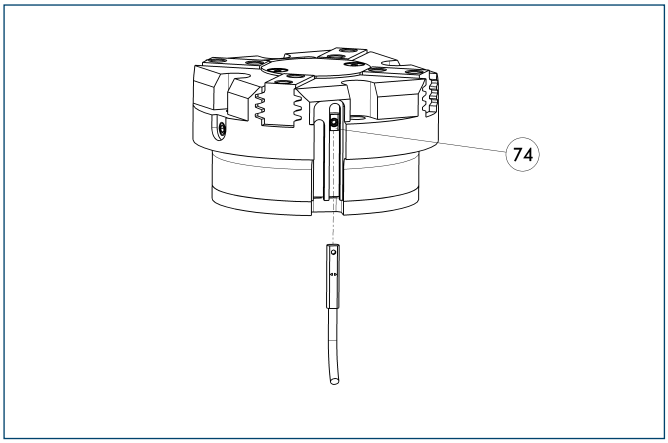


74 Stop for MMS-P

Position monitoring with two programmable positions per sensor. The end position monitoring is mounted in the C-slot.

| Description | ID | Recommended product |
|---|---|---|
| Programmable magnetic switch | | |
| MMS-P 22-S-M8-PNP | **0301370** | • |
| MMSK-P 22-S-PNP | **0301371** | |
| Connection cables | | |
| KA BG08-L 4P-0500 | **0307767** | |
| KA BG08-L 4P-1000 | **0307768** | |
| KA BW08-L 4P-0500 | **0307765** | |
| KA BW08-L 4P-1000 | **0307766** | |
| Sensor Distributor | | |
| V2-M8-4P-2XM8-3P | **0301380** | |

ⓘ Please note the minimum permitted bending radii for the sensor cables, which are generally 35 mm.

ⓘ Per gripper one sensor (closer/NO) is required, optionally a cable extension.

## Electronic magnetic switches

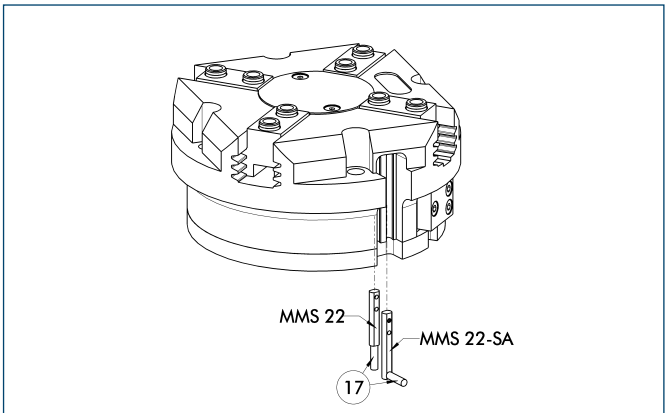


End position monitoring for mounting in the C-slot

| Description | ID | Recommended product |
|---|---|---|
| Electronic magnetic switches | | |
| MMS 22-S-M5-PNP | **0301438** | |
| MMS 22-S-M5-NPN | **0301439** | |
| MMS 22-S-M8-PNP | **0301432** | • |
| MMS 22-S-M8-NPN | **0301433** | |
| MMSK 22-S-PNP | **0301434** | |
| MMSK 22-S-NPN | **0301435** | |
| Electronic magnetic switches with lateral cable outlet | | |
| MMS 22-S-M5-PNP-SA | **0301448** | |
| MMS 22-S-M5-NPN-SA | **0301449** | |
| MMS 22-S-M8-PNP-SA | **0301442** | • |
| MMS 22-S-M8-NPN-SA | **0301443** | |
| MMSK 22-S-PNP-SA | **0301444** | |
| MMSK 22-S-NPN-SA | **0301445** | |
| Connection cables | | |
| KA BG05-L 3P-0300 | **0301652** | |
| KA BG08-L 3P-0300-PNP | **0301622** | |
| KA BG08-L 3P-0500-PNP | **0301623** | |
| KA BW05-L 3P-0300 | **0301650** | |
| KA BW08-L 3P-0300-NPN | **0301602** | |
| KA BW08-L 3P-0300-PNP | **0301594** | |
| KA BW08-L 3P-0500-NPN | **9641116** | |
| KA BW08-L 3P-0500-PNP | **0301502** | |
| Cable extensions | | |
| KV BW08-SG08 3P-0030-PNP | **0301495** | |
| KV BW08-SG08 3P-0100-PNP | **0301496** | |
| KV BW08-SG08 3P-0200-PNP | **0301497** | |

ⓘ Two sensors (closer/NO) are required for each gripper, plus extension cables as an option.

ⓘ Please note the minimum permitted bending radii for the sensor cables, which are generally 35 mm.

You can find more detailed information and individual parts of the above-mentioned accessories in the “Accessories” catalog section.

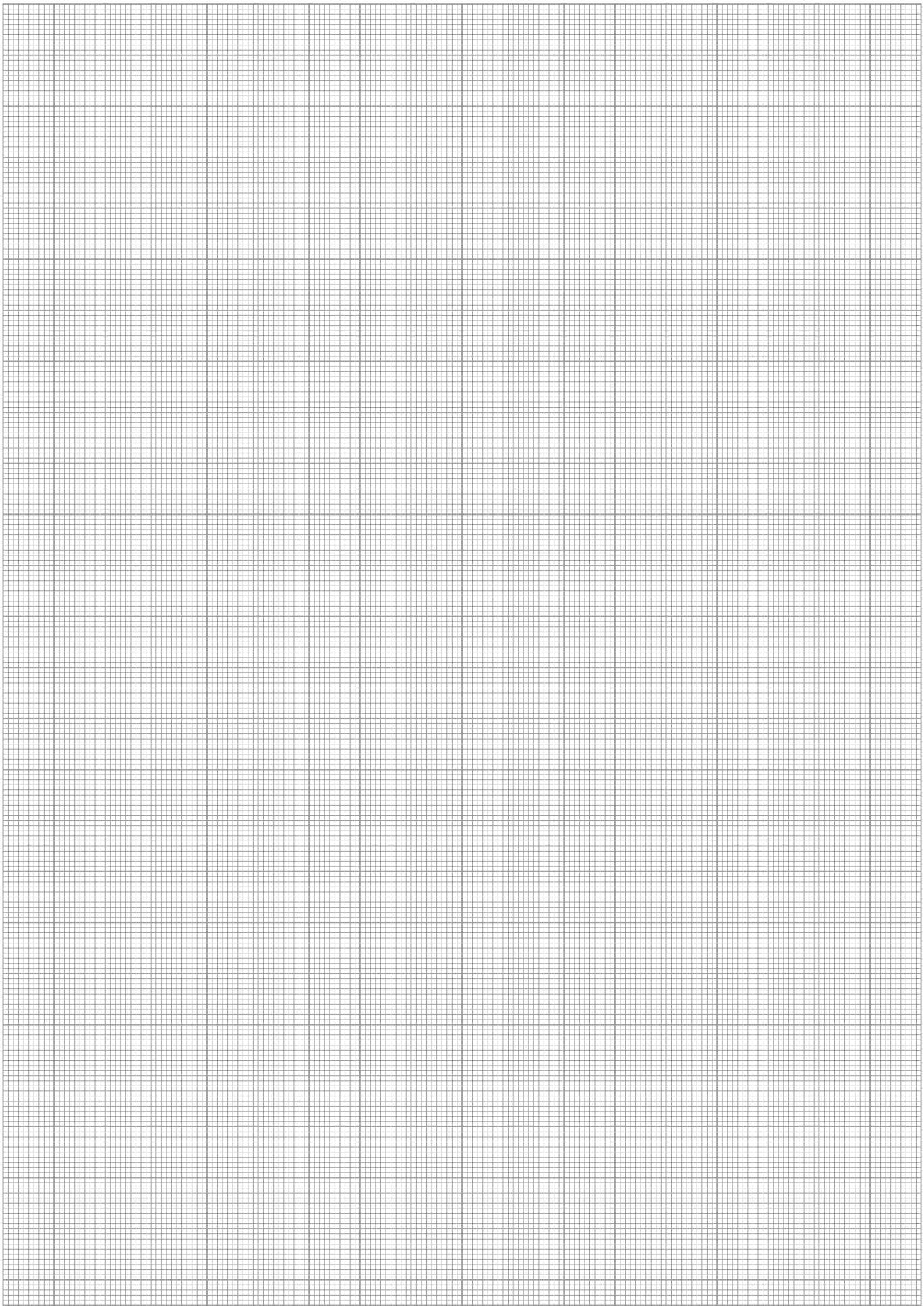

# PZV 100





## Gripping force, I.D. gripping

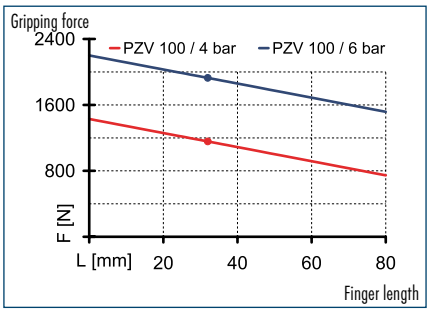


## Gripping force, O.D. gripping

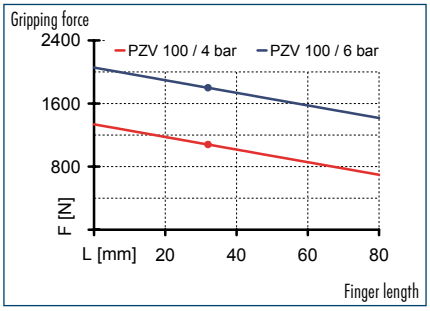


## Finger load

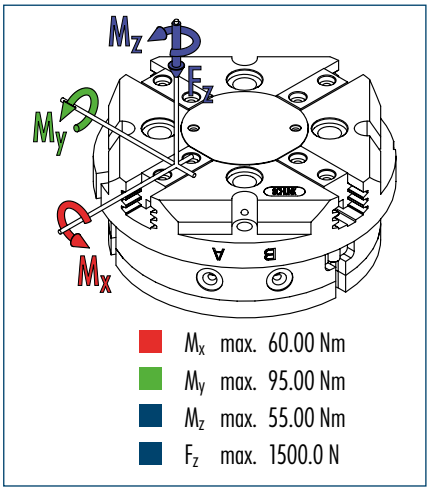


The indicated moments and forces are static values, apply per base jaw and may occur simultaneously. $M_y$ may arise in addition to the moment generated by the gripping force itself. If the max. permitted finger weight is exceeded, it is imperative to throttle the air pressure so that the jaw movement occurs without any hitting or bouncing. Service life may be reduced.

## Technical data

| Description | | PZV 100 |
|---|---|---|
| ID | | 0304002 |
| Stroke per finger | [mm] | 8 |
| Closing force | [N] | 1800 |
| Opening force | [N] | 1900 |
| Weight | [kg] | 1.6 |
| Recommended workpiece weight | [kg] | 9 |
| Air consumption per double stroke | [cm³] | 120 |
| Min./max. operating pressure | [bar] | 2/8 |
| Nominal operating pressure | [bar] | 6 |
| Closing/opening time | [s] | 0.04/0.04 |
| Max. permitted finger length | [mm] | 80 |
| Max. permitted weight per finger | [kg] | 0.6 |
| IP class | | 40 |
| Min./max. ambient temperature | [°C] | -10/90 |
| Repeat accuracy | [mm] | 0.01 |

## Main view

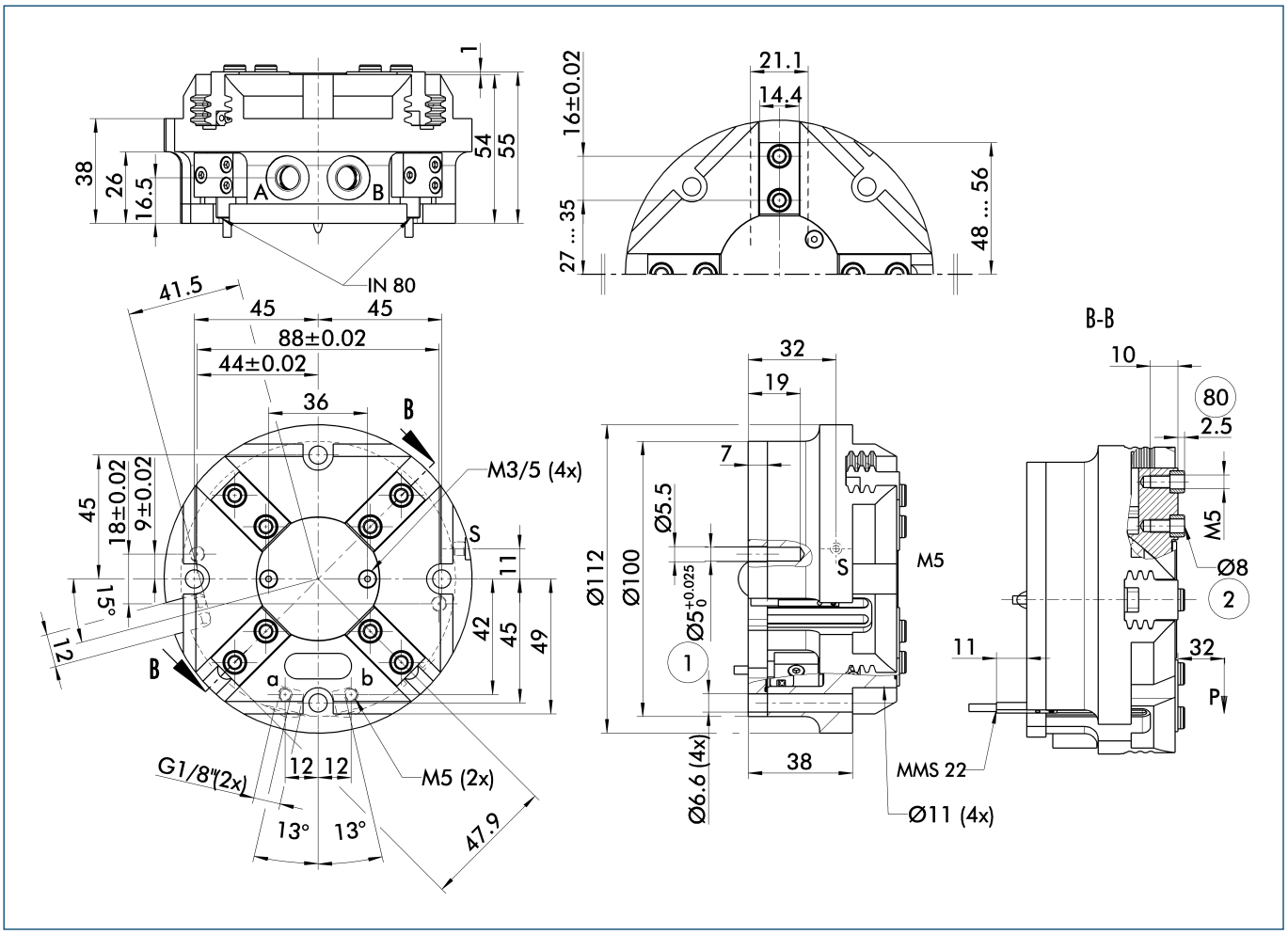


The drawing shows the gripper in the basic version with closed jaws, the dimensions do not include the options described below.

ⓘ The SDV-P pressure maintenance valve can be used as a gripping force maintenance device (see "Accessories" catalog section).

A, a Main/direct connection, gripper opening
B, b Main/direct connection, gripper closing
S Air purge connection
① Gripper connection
② Finger connection
(80) Depth of the centering sleeve hole in the matching part

## Hose-free direct connection

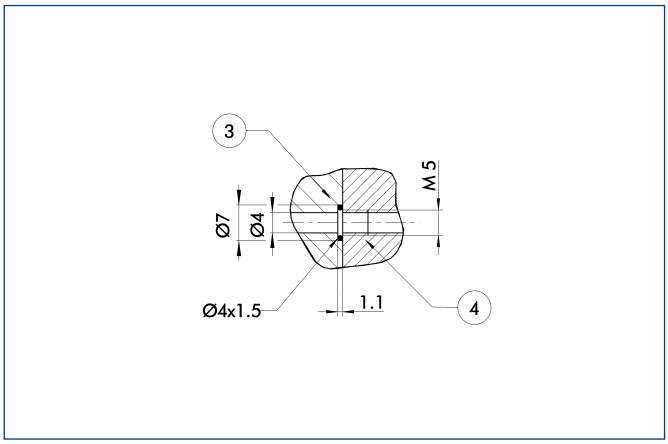


③ Adapter
④ Gripper

The direct connection is used for supplying compressed air without hoses. Instead, the pressure medium is fed through bore-holes in the mounting plate.

## Quick-change Jaw System

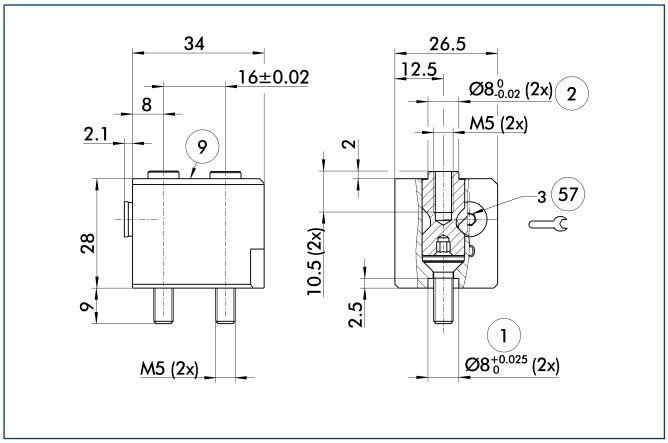


① Gripper connection
② Finger connection
⑨ For mounting screw connection diagram, see basic version
57 Locking

The BSWS quick-change jaw system enables top jaws to be changed on the gripper manually and rapidly. An adapter (BSWS-A) and a base (BSWS-B) are required for each gripper jaw.
For a reverse assembly without height set-up, one adapter (BSWS-A) and a kit (BSWS-U) per gripper jaw are required. Another effect of the BSWS-U is, that there are no disturbing fastening bores in the finger contour.

| Description | ID |
|---|---|
| Quick-change Jaw System adapter | |
| BSWS-A 80 | **0303024** |
| Quick-change Jaw System base | |
| BSWS-B 80 | **0303025** |
| Quick-change Jaw System reversed | |
| BSWS-U 80 | **0303042** |

## Universal intermediate jaw

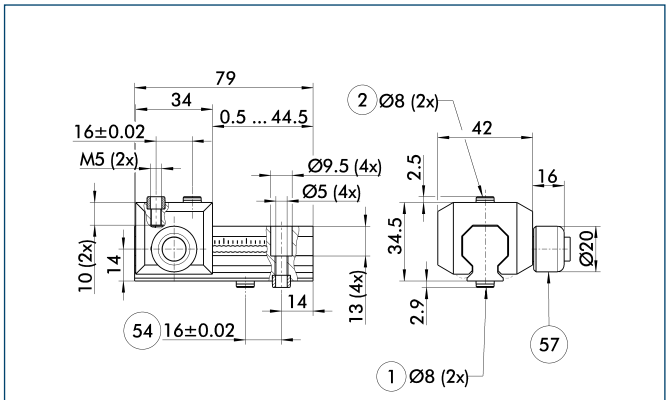


① Gripper connection
② Finger connection
54 Optional right or left connection
57 Locking

The universal intermediate jaw allows fast tool-free and reliable plugging and shifting of top jaws at the gripper.

| Description | ID | Grid dimension |
|---|---|---|
| Universal intermediate jaw | | |
| UZB 80 | **0300043** | 2 mm |
| UZB-S 80 | **5518271** | 2 mm |

ⓘ The slide UZB-S can be removed completely and has to be ordered separately. Moreover, it allows a fast jaw change.

You can find more detailed information and individual parts of the above-mentioned accessories in the "Accessories" catalog section.

## Force measuring jaws

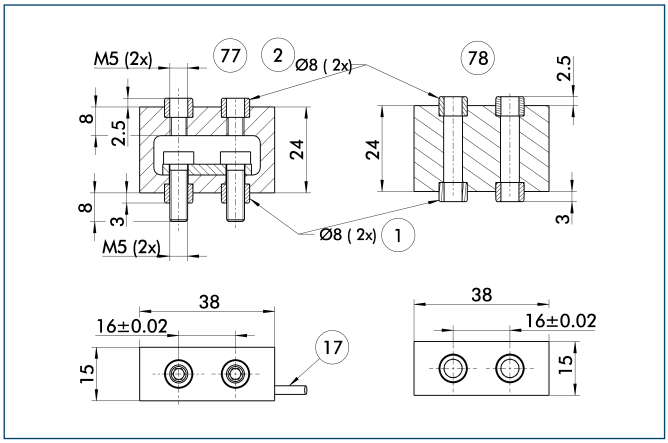


① Gripper connection
② Finger connection
⑰ Cable outlet
⑦⑦ Active intermediate jaws
⑦⑧ Passive intermediate jaws

Force measuring jaws measure gripping forces, but can also determine workpiece weights or dimensional deviations. There are active and passive intermediate jaws (FMS-ZBA or FMS-ZBP). At least one active force measuring jaw is required per gripper, the rest can be passive. For each active jaw, a FMS-A1 control unit and a FMS-A connection cable are required.

| Description | ID |
|---|---|
| Active intermediate jaws | |
| FMS-ZBA 80 | **0301834** |
| Passive intermediate jaws | |
| FMS-ZBP 80 | **0301835** |
| Electronic Processor | |
| FMS-A1 | **0301810** |
| Connection cables | |
| FMS-AK0200 | **0301820** |
| FMS-AK0500 | **0301821** |
| FMS-AK1000 | **0301822** |
| FMS-AK2000 | **0301823** |

## Finger blanks

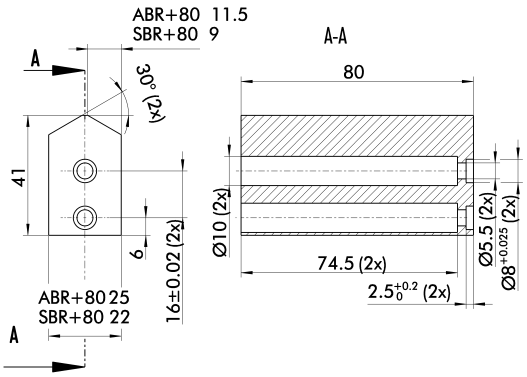


Finger blanks for customized subsequent machining

| Description | ID | Material | Scope of delivery |
|---|---|---|---|
| Finger blanks | | | |
| ABR-plus 80 | **0300011** | Aluminum | 1 |
| SBR-plus 80 | **0300021** | 16 MnCr 5 | 1 |

You can find more detailed information and individual parts of the above-mentioned accessories in the “Accessories” catalog section.

## Programmable magnetic switch

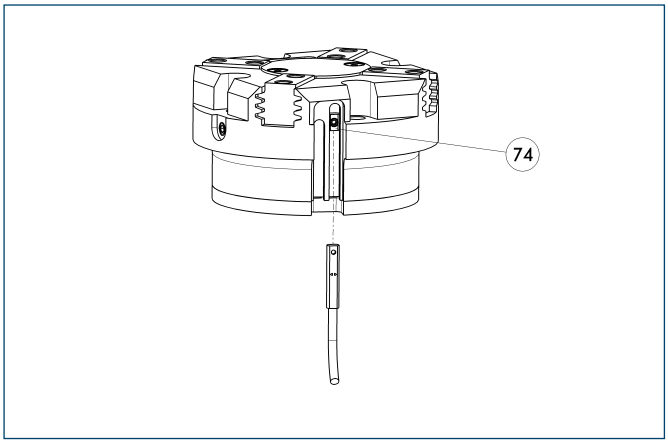


(74) Stop for MMS-P

Position monitoring with two programmable positions per sensor. The end position monitoring is mounted in the C-slot.

| Description | ID | Recommended product |
|---|---|---|
| Programmable magnetic switch | | |
| MMS-P 22-S-M8-PNP | **0301370** | • |
| MMSK-P 22-S-PNP | **0301371** | |
| Connection cables | | |
| KA BG08-L 4P-0500 | **0307767** | |
| KA BG08-L 4P-1000 | **0307768** | |
| KA BW08-L 4P-0500 | **0307765** | |
| KA BW08-L 4P-1000 | **0307766** | |
| Sensor Distributor | | |
| V2-M8-4P-2XM8-3P | **0301380** | |

ⓘ Please note the minimum permitted bending radii for the sensor cables, which are generally 35 mm.

ⓘ Per gripper one sensor (closer/NO) is required, optionally a cable extension.

## Electronic magnetic switches

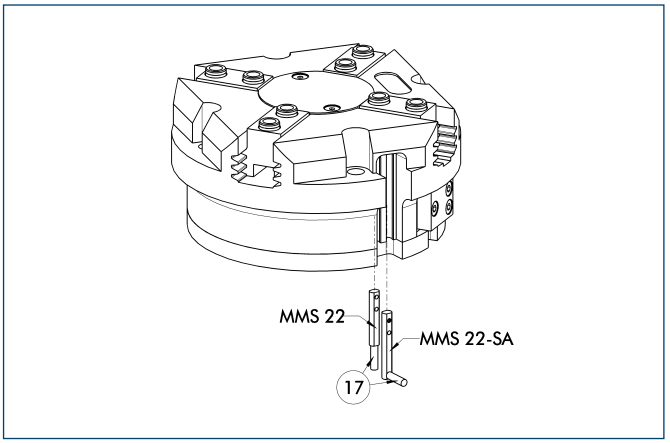


End position monitoring for mounting in the C-slot

| Description | ID | Recommended product |
|---|---|---|
| Electronic magnetic switches | | |
| MMS 22-S-M5-PNP | **0301438** | |
| MMS 22-S-M5-NPN | **0301439** | |
| MMS 22-S-M8-PNP | **0301432** | • |
| MMS 22-S-M8-NPN | **0301433** | |
| MMSK 22-S-PNP | **0301434** | |
| MMSK 22-S-NPN | **0301435** | |
| Electronic magnetic switches with lateral cable outlet | | |
| MMS 22-S-M5-PNP-SA | **0301448** | |
| MMS 22-S-M5-NPN-SA | **0301449** | |
| MMS 22-S-M8-PNP-SA | **0301442** | • |
| MMS 22-S-M8-NPN-SA | **0301443** | |
| MMSK 22-S-PNP-SA | **0301444** | |
| MMSK 22-S-NPN-SA | **0301445** | |
| Reed Switches | | |
| RMS 22-S-M8 | **0377720** | • |
| Connection cables | | |
| KA BG05-L 3P-0300 | **0301652** | |
| KA BG08-L 3P-0300-PNP | **0301622** | |
| KA BG08-L 3P-0500-PNP | **0301623** | |
| KA BW05-L 3P-0300 | **0301650** | |
| KA BW08-L 3P-0300-NPN | **0301602** | |
| KA BW08-L 3P-0300-PNP | **0301594** | |
| KA BW08-L 3P-0500-NPN | **9641116** | |
| KA BW08-L 3P-0500-PNP | **0301502** | |
| Cable extensions | | |
| KV BW08-SG08 3P-0030-PNP | **0301495** | |
| KV BW08-SG08 3P-0100-PNP | **0301496** | |
| KV BW08-SG08 3P-0200-PNP | **0301497** | |

ⓘ Two sensors (closer/NO) are required for each gripper, plus extension cables as an option.

ⓘ Please note the minimum permitted bending radii for the sensor cables, which are generally 35 mm.

You can find more detailed information and individual parts of the above-mentioned accessories in the “Accessories” catalog section.

## Inductive proximity switches

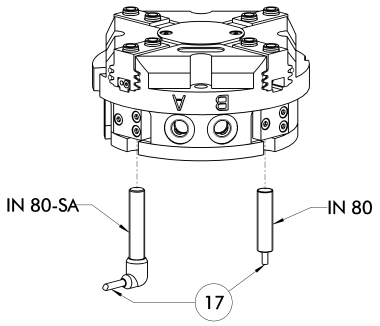


⑰ Cable outlet

End position monitoring for direct mounting

| Description | ID | Recommended product |
|---|---|---|
| Inductive proximity switches | | |
| IN 80-S-M8 | **0301478** | • |
| IN 80-S-M12 | **0301578** | |
| INK 80-S | **0301550** | |
| IN-C 80-S-M8 | **0301475** | |
| Inductive proximity switch with lateral outlet | | |
| IN 80-S-M12-SA | **0301587** | |
| IN 80-S-M8-SA | **0301483** | • |
| INK 80-S-SA | **0301566** | |
| Connection cables | | |
| KA BG08-L 3P-0300-PNP | **0301622** | |
| KA BG08-L 3P-0500-PNP | **0301623** | |
| KA BG12-L 3P-0500-PNP | **30016369** | |
| KA BW08-L 3P-0300-PNP | **0301594** | |
| KA BW08-L 3P-0500-PNP | **0301502** | |
| KA BW12-L 3P-0300-PNP | **0301503** | |
| KA BW12-L 3P-0500-PNP | **0301507** | |
| Cable extensions | | |
| KV BG12-SG12 3P-0030-PNP | **0301999** | |
| KV BG12-SG12 3P-0060-PNP | **0301998** | |
| KV BW08-SG08 3P-0030-PNP | **0301495** | |
| KV BW08-SG08 3P-0100-PNP | **0301496** | |
| KV BW08-SG08 3P-0200-PNP | **0301497** | |
| KV BW12-SG12 3P-0030-PNP | **0301595** | |
| KV BW12-SG12 3P-0100-PNP | **0301596** | |
| KV BW12-SG12 3P-0200-PNP | **0301597** | |

ⓘ Two sensors (closer/NO) are required for each gripper, plus extension cables as an option.
ⓘ Please note the minimum permitted bending radii for the sensor cables, which are generally 35 mm.

## Cylindrical Reed Switches

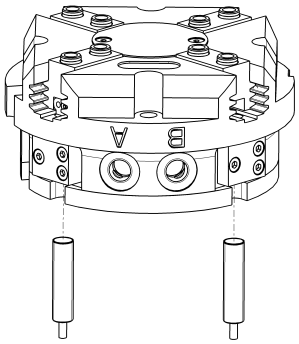

End position monitoring mounted with mounting kit

| Description | ID |
|---|---|
| Mounting kit for proximity switch | |
| AS-RMS 80 PGN/PZN-plus 64/80 | **0377725** |
| Reed Switches | |
| RMS 80-S-M8 | **0377721** |

ⓘ Two sensors (closer/NO) are required for each gripper, plus extension cables as an option.
ⓘ This mounting kit needs to be ordered optionally as an accessory.
ⓘ Please note the minimum permitted bending radii for the sensor cables, which are generally 35 mm.

You can find more detailed information and individual parts of the above-mentioned accessories in the “Accessories” catalog section.

## Analog position sensor

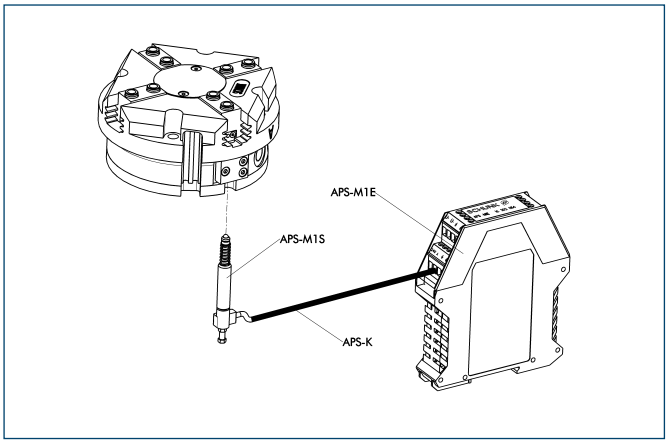


Analog multi position monitoring for any desired positions

| Description | ID |
|---|---|
| Mounting kit | |
| AS-APS-M1-80/1 | **0302077** |
| Connection cables | |
| APS-K0200 | **0302066** |
| APS-K0700 | **0302068** |
| Electronic Processor | |
| APS-M1E | **0302064** |
| Sensor | |
| APS-M1S | **0302062** |

ⓘ When using an APS system, for each gripper a mounting kit (AS-APS), an APS sensor (APS-M 1S, incl. 3 m cable) as well as an electronics (APS-M1e) are required.

ⓘ An extension cable (APS-K) can be connected between the sensor and the electronics as an option. The max. cable length between the sensor and the electronics is 10 m, between the electronics and their control unit (PLC) it is max. 1 m.

## Flexible Position Sensor

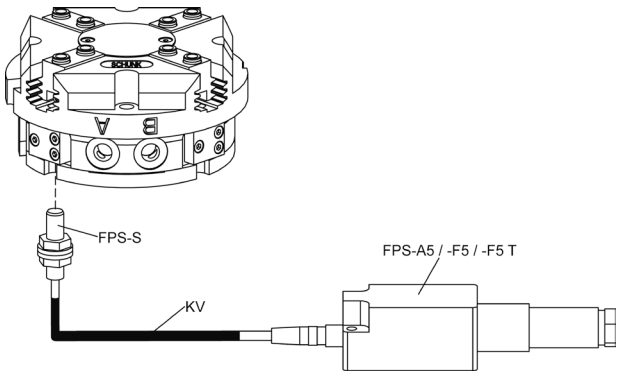


Flexible position monitoring of up to five positions

| Description | ID |
|---|---|
| Mounting kit for FPS | |
| AS-PGN-plus/PZN-plus 80/1, PZB 80/100 | **0301632** |
| Electronic Processor | |
| FPS-F5 | **0301805** |
| FPS-F5 T | **0301807** |
| Sensor | |
| FPS-S M8 | **0301704** |

ⓘ When using a FPS system, a FPS sensor (FPS-S) and a control unit (FPS-F5 / F5 T or A5) are required for each gripper as well as a mounting kit (AS), if listed. Cable extensions (KV) are available as options in the “Accessories” catalog section.

You can find more detailed information and individual parts of the above-mentioned accessories in the “Accessories” catalog section.

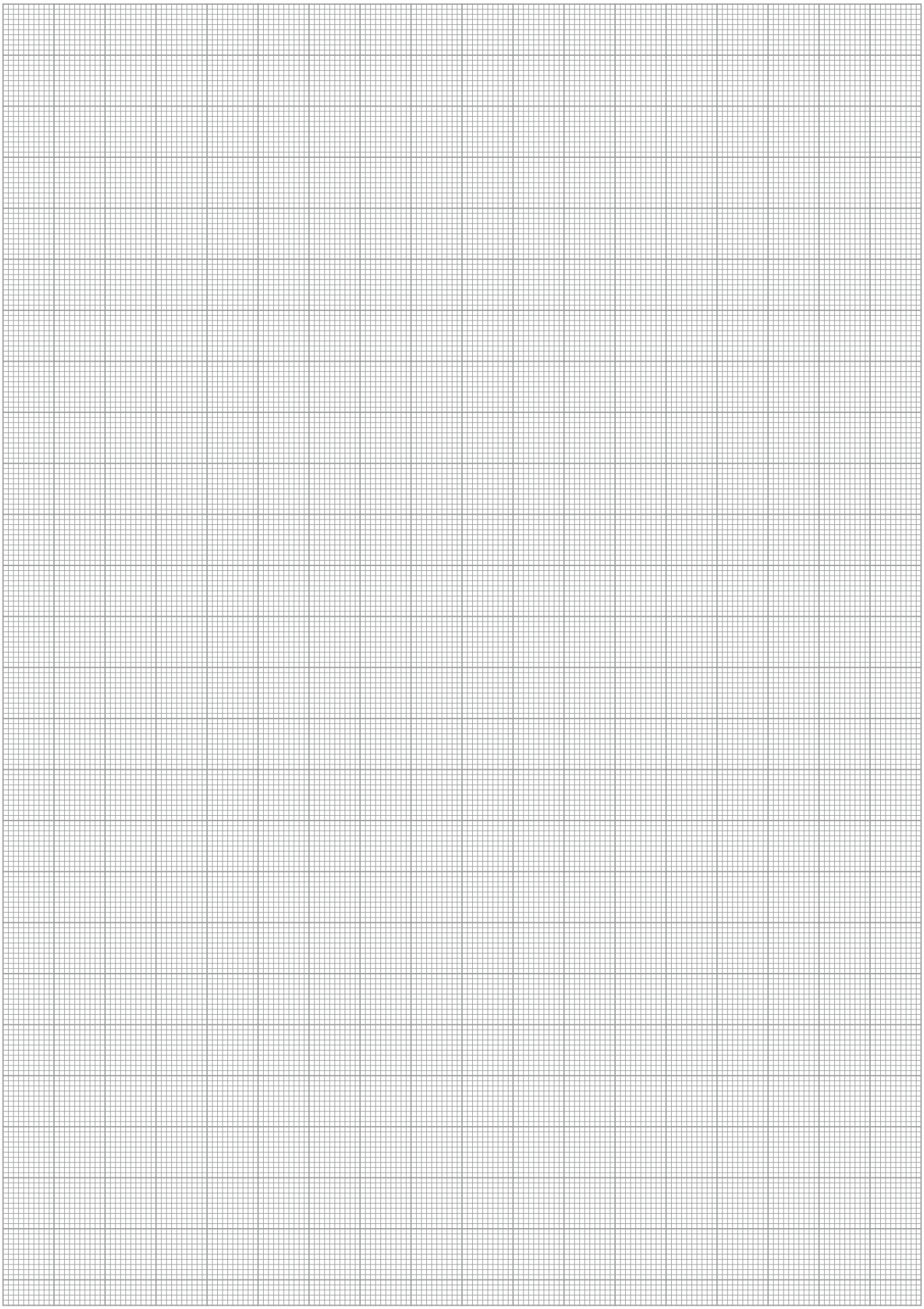

# PZV 125

**Pneumatic • Multi-Finger Concentric Gripper • 4-Finger Concentric Gripper**



## Gripping force, I.D. gripping

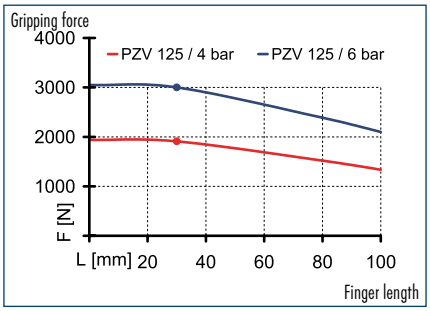


## Gripping force, O.D. gripping

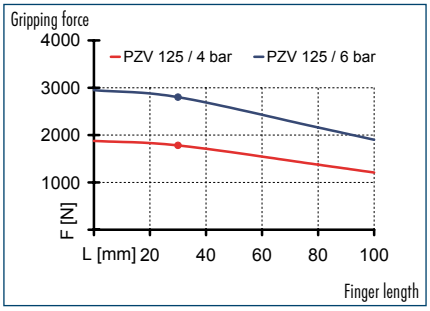


## Finger load

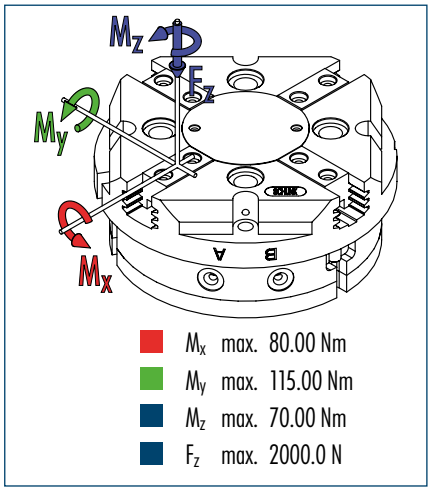


ⓘ The indicated moments and forces are static values, apply per base jaw and may occur simultaneously. $M_y$ may arise in addition to the moment generated by the gripping force itself. If the max. permitted finger weight is exceeded, it is imperative to throttle the air pressure so that the jaw movement occurs without any hitting or bouncing. Service life may be reduced.

## Technical data

| Description | | PZV 125 |
|---|---|---|
| **ID** | | **0304003** |
| Stroke per finger | [mm] | 10 |
| Closing force | [N] | 3000 |
| Opening force | [N] | 3230 |
| Weight | [kg] | 2.3 |
| Recommended workpiece weight | [kg] | 15 |
| Air consumption per double stroke | [cm³] | 230 |
| Min./max. operating pressure | [bar] | 2/8 |
| Nominal operating pressure | [bar] | 6 |
| Closing/opening time | [s] | 0.1/0.1 |
| Max. permitted finger length | [mm] | 100 |
| Max. permitted weight per finger | [kg] | 1.1 |
| IP class | | 40 |
| Min./max. ambient temperature | [°C] | -10/90 |
| Repeat accuracy | [mm] | 0.01 |

## Main view

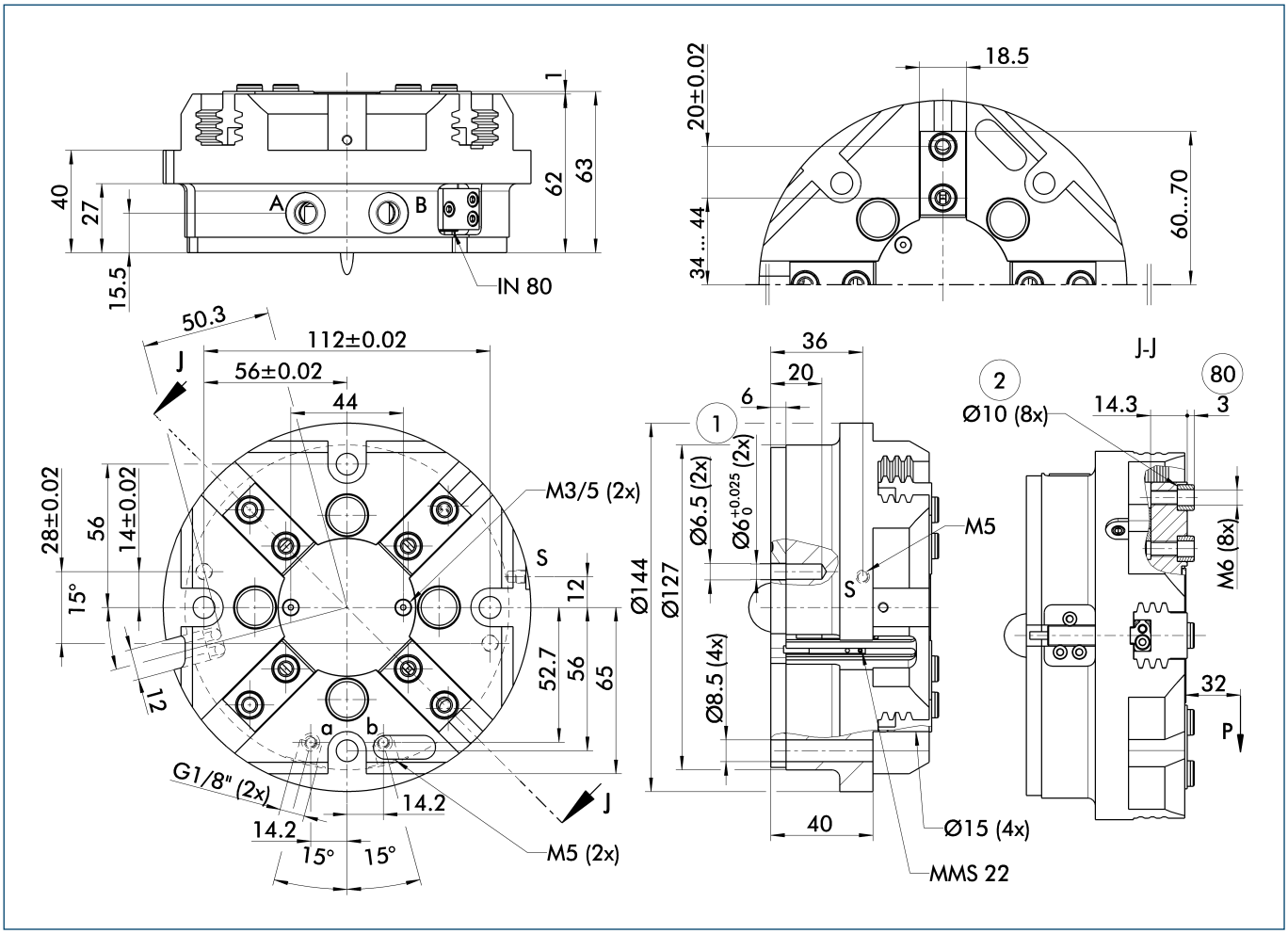


The drawing shows the gripper in the basic version with closed jaws, the dimensions do not include the options described below.

ⓘ The SDV-P pressure maintenance valve can be used as a gripping force maintenance device (see "Accessories" catalog section).

A, a Main/direct connection, gripper opening
B, b Main/direct connection, gripper closing
① Gripper connection
② Finger connection
80 Depth of the centering sleeve hole in the matching part

## Hose-free direct connection

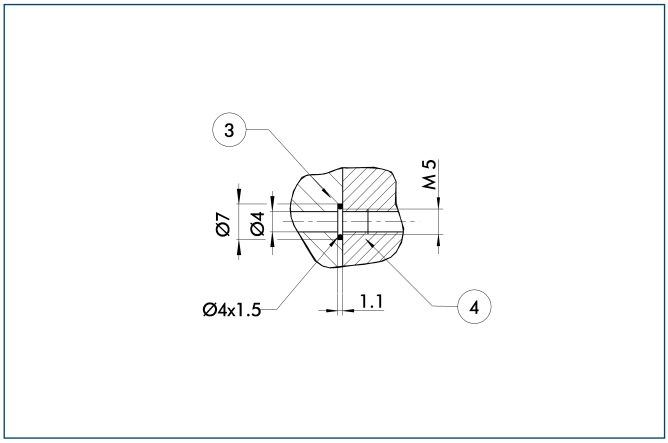


③ Adapter
④ Gripper

The direct connection is used for supplying compressed air without hoses. Instead, the pressure medium is fed through bore-holes in the mounting plate.

## Spring-loaded pressure piece

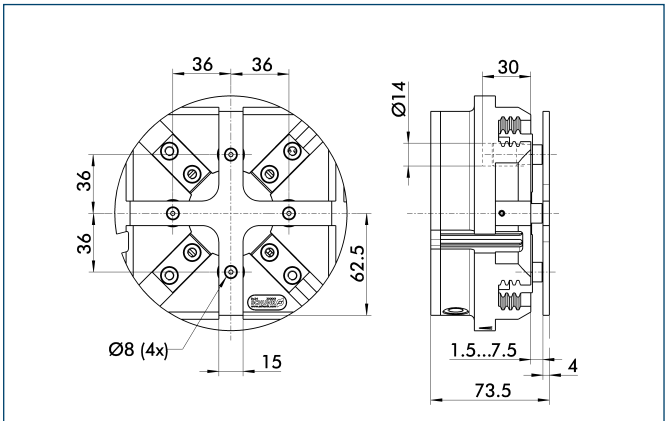


For spring-supported positioning of the workpiece against a stop after the gripper has opened. Especially developed for loading machines.

| Description | ID | Stroke | Min. force |
|---|---|---|---|
| Spring-loaded pressure piece | | | |
| A-PZV 125 | **0304013** | 6 mm | 173 N |

You can find more detailed information and individual parts of the above-mentioned accessories in the "Accessories" catalog section.

## Quick-change Jaw System

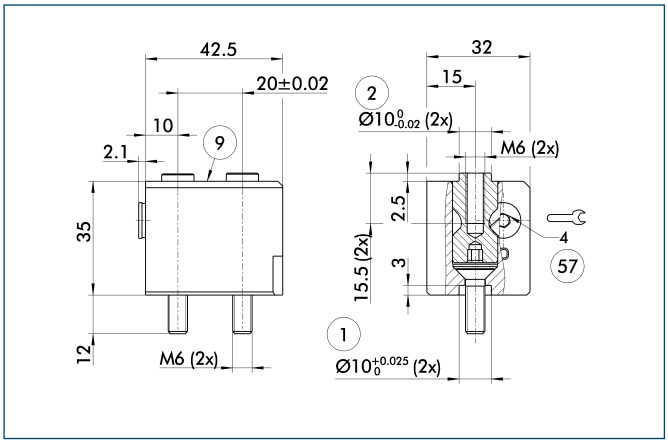


① Gripper connection
② Finger connection
⑨ For mounting screw connection diagram, see basic version
㊼ Locking

The BSWS quick-change jaw system enables top jaws to be changed on the gripper manually and rapidly. An adapter (BSWS-A) and a base (BSWS-B) are required for each gripper jaw.
For a reverse assembly without height set-up, one adapter (BSWS-A) and a kit (BSWS-U) per gripper jaw are required. Another effect of the BSWS-U is, that there are no disturbing fastening bores in the finger contour.

| Description | ID |
|---|---|
| Quick-change Jaw System adapter | |
| BSWS-A 100 | **0303026** |
| Quick-change Jaw System base | |
| BSWS-B 100 | **0303027** |
| Quick-change Jaw System reversed | |
| BSWS-U 100 | **0303043** |

## Universal intermediate jaw

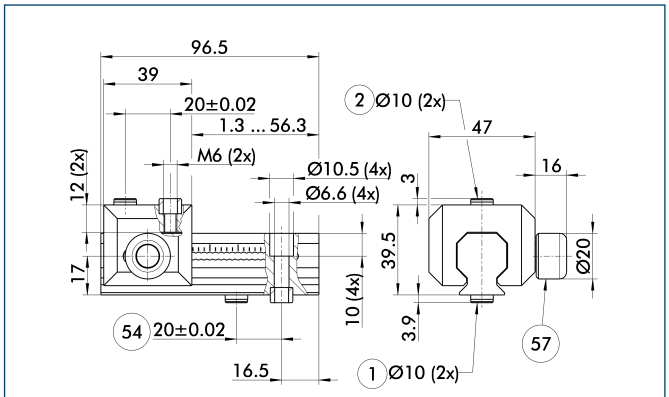


① Gripper connection
② Finger connection
㊹ Optional right or left connection
㊼ Locking

The universal intermediate jaw allows fast tool-free and reliable plugging and shifting of top jaws at the gripper.

| Description | ID | Grid dimension |
|---|---|---|
| Universal intermediate jaw | | |
| UZB 100 | **0300044** | 2.5 mm |
| UZB-S 100 | **5518272** | 2.5 mm |

ⓘ The slide UZB-S can be removed completely and has to be ordered separately. Moreover, it allows a fast jaw change.

You can find more detailed information and individual parts of the above-mentioned accessories in the “Accessories” catalog section.

## Force measuring jaws

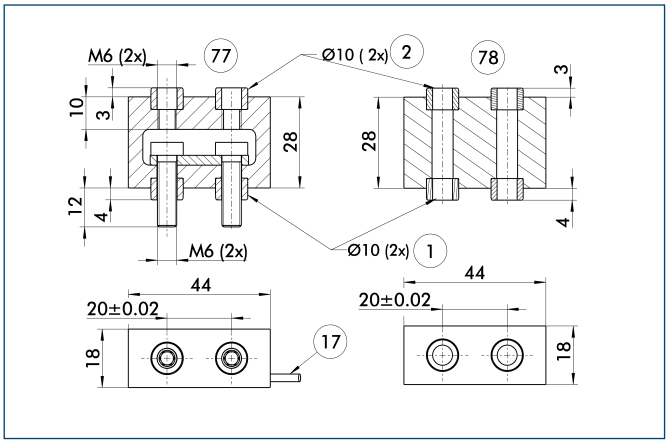


① Gripper connection
② Finger connection
⑰ Cable outlet
⑦⑦ Active intermediate jaws
⑦⑧ Passive intermediate jaws

Force measuring jaws measure gripping forces, but can also determine workpiece weights or dimensional deviations. There are active and passive intermediate jaws (FMS-ZBA or FMS-ZBP). At least one active force measuring jaw is required per gripper, the rest can be passive. For each active jaw, a FMS-A1 control unit and a FMS-A connection cable are required.

| Description | ID |
|---|---|
| Active intermediate jaws | |
| FMS-ZBA 100 | **0301836** |
| Passive intermediate jaws | |
| FMS-ZBP 100 | **0301837** |
| Electronic Processor | |
| FMS-A1 | **0301810** |
| Connection cables | |
| FMS-AK0200 | **0301820** |
| FMS-AK0500 | **0301821** |
| FMS-AK1000 | **0301822** |
| FMS-AK2000 | **0301823** |

## Finger blanks

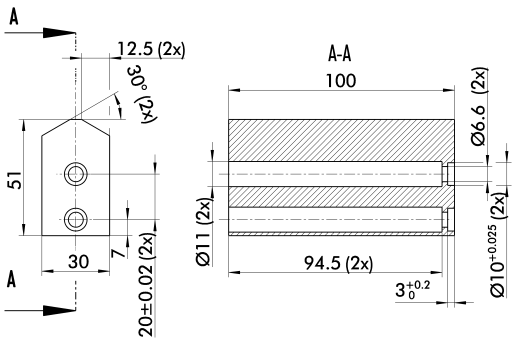


Finger blanks for customized subsequent machining

| Description | ID | Material | Scope of delivery |
|---|---|---|---|
| Finger blanks | | | |
| ABR-plus 100 | **0300012** | Aluminum | 1 |
| SBR-plus 100 | **0300022** | 16 MnCr 5 | 1 |

You can find more detailed information and individual parts of the above-mentioned accessories in the “Accessories” catalog section.

## Programmable magnetic switch

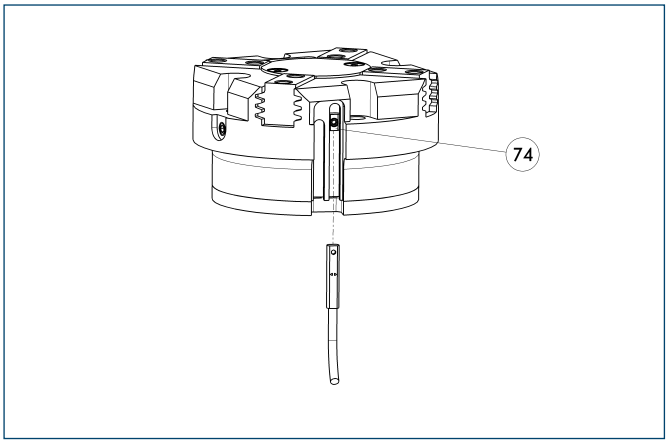


74 Stop for MMS-P

Position monitoring with two programmable positions per sensor. The end position monitoring is mounted in the C-slot.

| Description | ID | Recommended product |
|---|---|---|
| Programmable magnetic switch | | |
| MMS-P 22-S-M8-PNP | **0301370** | • |
| MMSK-P 22-S-PNP | **0301371** | |
| Connection cables | | |
| KA BG08-L 4P-0500 | **0307767** | |
| KA BG08-L 4P-1000 | **0307768** | |
| KA BW08-L 4P-0500 | **0307765** | |
| KA BW08-L 4P-1000 | **0307766** | |
| Sensor Distributor | | |
| V2-M8-4P-2XM8-3P | **0301380** | |

ⓘ Please note the minimum permitted bending radii for the sensor cables, which are generally 35 mm.

ⓘ Per gripper one sensor (closer/NO) is required, optionally a cable extension.

## Electronic magnetic switches

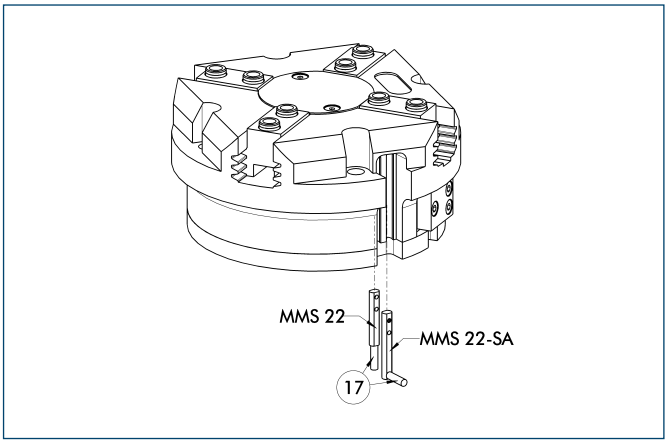


End position monitoring for mounting in the C-slot

| Description | ID | Recommended product |
|---|---|---|
| Electronic magnetic switches | | |
| MMS 22-S-M5-PNP | **0301438** | |
| MMS 22-S-M5-NPN | **0301439** | |
| MMS 22-S-M8-PNP | **0301432** | • |
| MMS 22-S-M8-NPN | **0301433** | |
| MMSK 22-S-PNP | **0301434** | |
| MMSK 22-S-NPN | **0301435** | |
| Electronic magnetic switches with lateral cable outlet | | |
| MMS 22-S-M5-PNP-SA | **0301448** | |
| MMS 22-S-M5-NPN-SA | **0301449** | |
| MMS 22-S-M8-PNP-SA | **0301442** | • |
| MMS 22-S-M8-NPN-SA | **0301443** | |
| MMSK 22-S-PNP-SA | **0301444** | |
| MMSK 22-S-NPN-SA | **0301445** | |
| Reed Switches | | |
| RMS 22-S-M8 | **0377720** | • |
| Connection cables | | |
| KA BG05-L 3P-0300 | **0301652** | |
| KA BG08-L 3P-0300-PNP | **0301622** | |
| KA BG08-L 3P-0500-PNP | **0301623** | |
| KA BW05-L 3P-0300 | **0301650** | |
| KA BW08-L 3P-0300-NPN | **0301602** | |
| KA BW08-L 3P-0300-PNP | **0301594** | |
| KA BW08-L 3P-0500-NPN | **9641116** | |
| KA BW08-L 3P-0500-PNP | **0301502** | |
| Cable extensions | | |
| KV BW08-SG08 3P-0030-PNP | **0301495** | |
| KV BW08-SG08 3P-0100-PNP | **0301496** | |
| KV BW08-SG08 3P-0200-PNP | **0301497** | |

ⓘ Two sensors (closer/NO) are required for each gripper, plus extension cables as an option.

ⓘ Please note the minimum permitted bending radii for the sensor cables, which are generally 35 mm.

You can find more detailed information and individual parts of the above-mentioned accessories in the “Accessories” catalog section.

## Inductive proximity switches

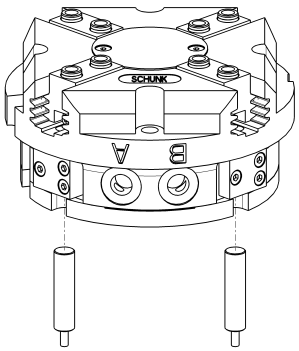


End position monitoring for direct mounting

| Description | ID | Recommended product |
|---|---|---|
| Inductive proximity switches | | |
| IN 80-S-M8 | **0301478** | • |
| IN 80-S-M12 | **0301578** | |
| INK 80-S | **0301550** | |
| IN-C 80-S-M8 | **0301475** | |
| Connection cables | | |
| KA BG08-L 3P-0300-PNP | **0301622** | |
| KA BG08-L 3P-0500-PNP | **0301623** | |
| KA BG12-L 3P-0500-PNP | **30016369** | |
| KA BW08-L 3P-0300-PNP | **0301594** | |
| KA BW08-L 3P-0500-PNP | **0301502** | |
| KA BW12-L 3P-0300-PNP | **0301503** | |
| KA BW12-L 3P-0500-PNP | **0301507** | |
| Cable extensions | | |
| KV BG12-SG12 3P-0030-PNP | **0301999** | |
| KV BG12-SG12 3P-0060-PNP | **0301998** | |
| KV BW08-SG08 3P-0030-PNP | **0301495** | |
| KV BW08-SG08 3P-0100-PNP | **0301496** | |
| KV BW08-SG08 3P-0200-PNP | **0301497** | |
| KV BW12-SG12 3P-0030-PNP | **0301595** | |
| KV BW12-SG12 3P-0100-PNP | **0301596** | |
| KV BW12-SG12 3P-0200-PNP | **0301597** | |

ⓘ Two sensors (closer/NO) are required for each gripper, plus extension cables as an option.

ⓘ Please note the minimum permitted bending radii for the sensor cables, which are generally 35 mm.

## Cylindrical Reed Switches

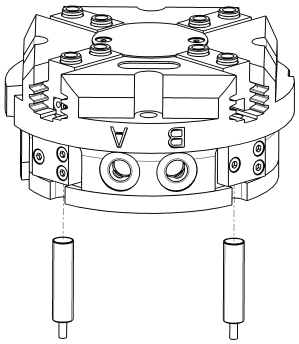


End position monitoring mounted with mounting kit

| Description | ID |
|---|---|
| Mounting kit for proximity switch | |
| AS-RMS 80<br>PGN/PZN-plus 100/125 | **0377726** |
| Reed Switches | |
| RMS 80-S-M8 | **0377721** |

ⓘ Two sensors (closer/NO) are required for each gripper, plus extension cables as an option.

ⓘ This mounting kit needs to be ordered optionally as an accessory.

ⓘ Please note the minimum permitted bending radii for the sensor cables, which are generally 35 mm.

You can find more detailed information and individual parts of the above-mentioned accessories in the “Accessories” catalog section.

## Analog position sensor

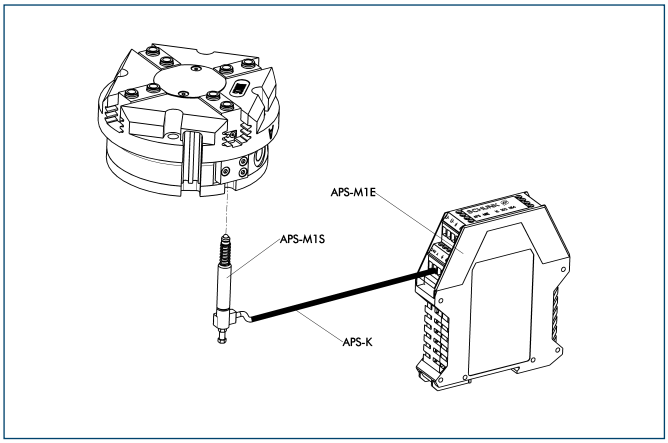


Analog multi position monitoring for any desired positions

| Description | ID |
|---|---|
| Mounting kit | |
| AS-APS-M1-100/1 | **0302079** |
| Connection cables | |
| APS-K0200 | **0302066** |
| APS-K0700 | **0302068** |
| Electronic Processor | |
| APS-M1E | **0302064** |
| Sensor | |
| APS-M1S | **0302062** |

ⓘ When using an APS system, for each gripper a mounting kit (AS-APS), an APS sensor (APS-M 1S, incl. 3 m cable) as well as an electronics (APS-M1e) are required.

ⓘ An extension cable (APS-K) can be connected between the sensor and the electronics as an option. The max. cable length between the sensor and the electronics is 10 m, between the electronics and their control unit (PLC) it is max. 1 m.

## Flexible Position Sensor

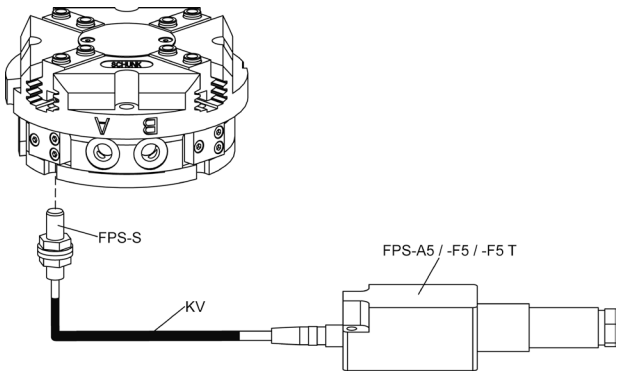


Flexible position monitoring of up to five positions

| Description | ID |
|---|---|
| Mounting kit for FPS | |
| AS-PGN/PZN-plus 100/1 | **0301634** |
| Electronic Processor | |
| FPS-F5 | **0301805** |
| FPS-F5 T | **0301807** |
| Sensor | |
| FPS-S M8 | **0301704** |

ⓘ When using a FPS system, a FPS sensor (FPS-S) and a control unit (FPS-F5 / F5 T or A5) are required for each gripper as well as a mounting kit (AS), if listed. Cable extensions (KV) are available as options in the “Accessories” catalog section.

You can find more detailed information and individual parts of the above-mentioned accessories in the “Accessories” catalog section.

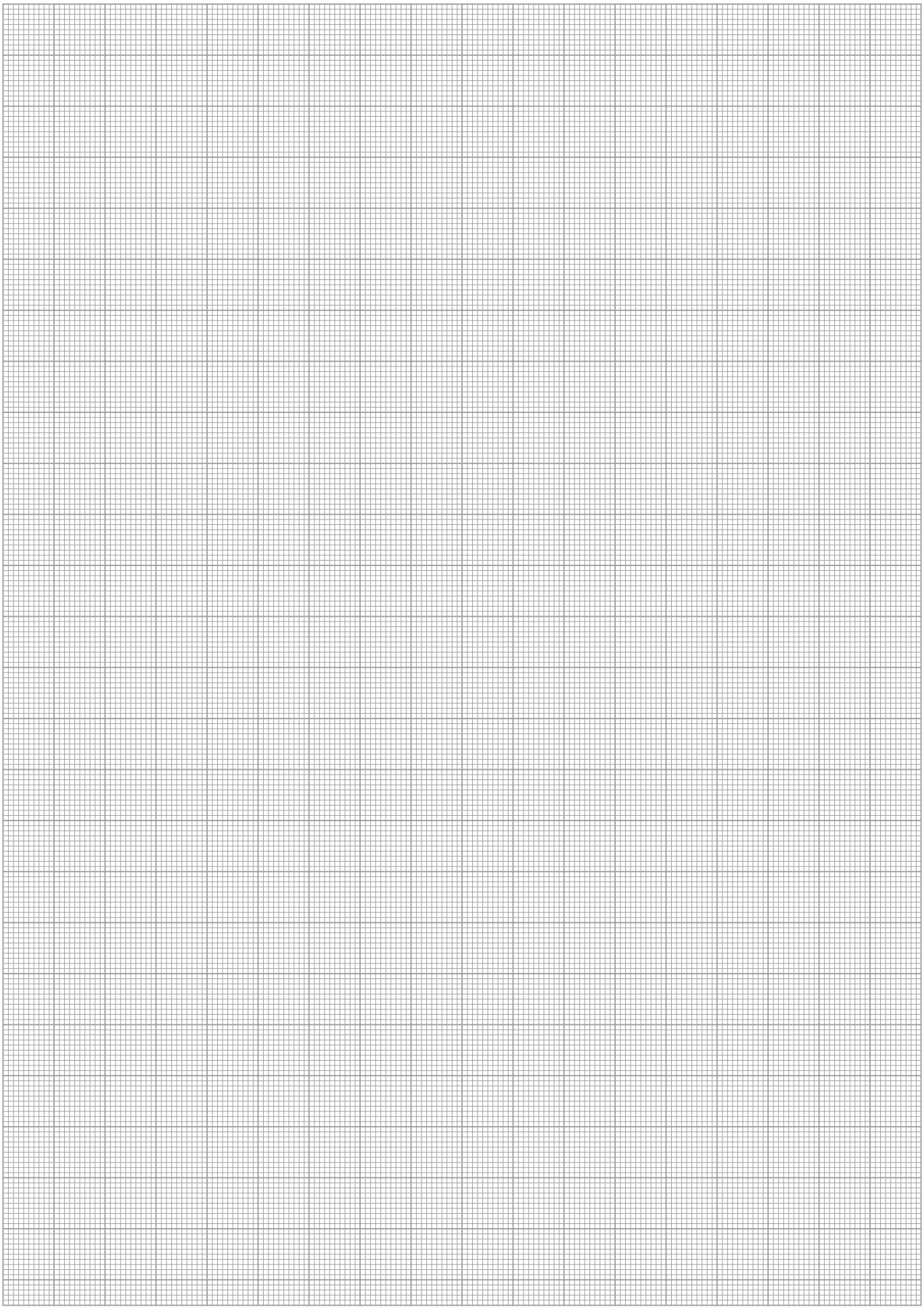

# PZV 160





## Gripping force, I.D. gripping

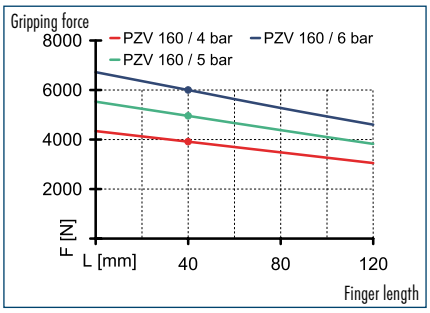


## Gripping force, O.D. gripping

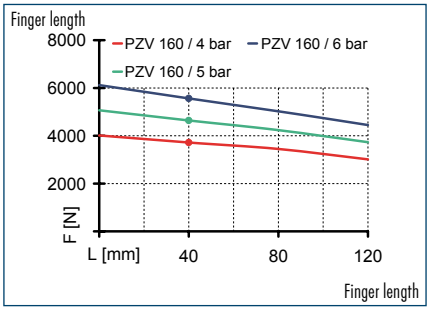


## Finger load

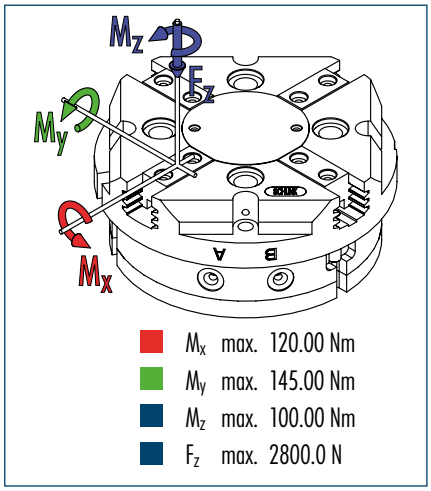


| | |
|---|---|
| $M_x$ | max. 120.00 Nm |
| $M_y$ | max. 145.00 Nm |
| $M_z$ | max. 100.00 Nm |
| $F_z$ | max. 2800.0 N |

ⓘ The indicated moments and forces are static values, apply per base jaw and may occur simultaneously. $M_y$ may arise in addition to the moment generated by the gripping force itself. If the max. permitted finger weight is exceeded, it is imperative to throttle the air pressure so that the jaw movement occurs without any hitting or bouncing. Service life may be reduced.

## Technical data

| Description | | PZV 160 |
|---|---|---|
| **ID** | | **0304004** |
| Stroke per finger | [mm] | 13 |
| Closing force | [N] | 5200 |
| Opening force | [N] | 5600 |
| Weight | [kg] | 5.5 |
| Recommended workpiece weight | [kg] | 26 |
| Air consumption per double stroke | [cm³] | 520 |
| Min./max. operating pressure | [bar] | 2/6 |
| Nominal operating pressure | [bar] | 6 |
| Closing/opening time | [s] | 0.1/0.1 |
| Max. permitted finger length | [mm] | 120 |
| Max. permitted weight per finger | [kg] | 2.1 |
| IP class | | 40 |
| Min./max. ambient temperature | [°C] | -10/90 |
| Repeat accuracy | [mm] | 0.01 |

## Main view

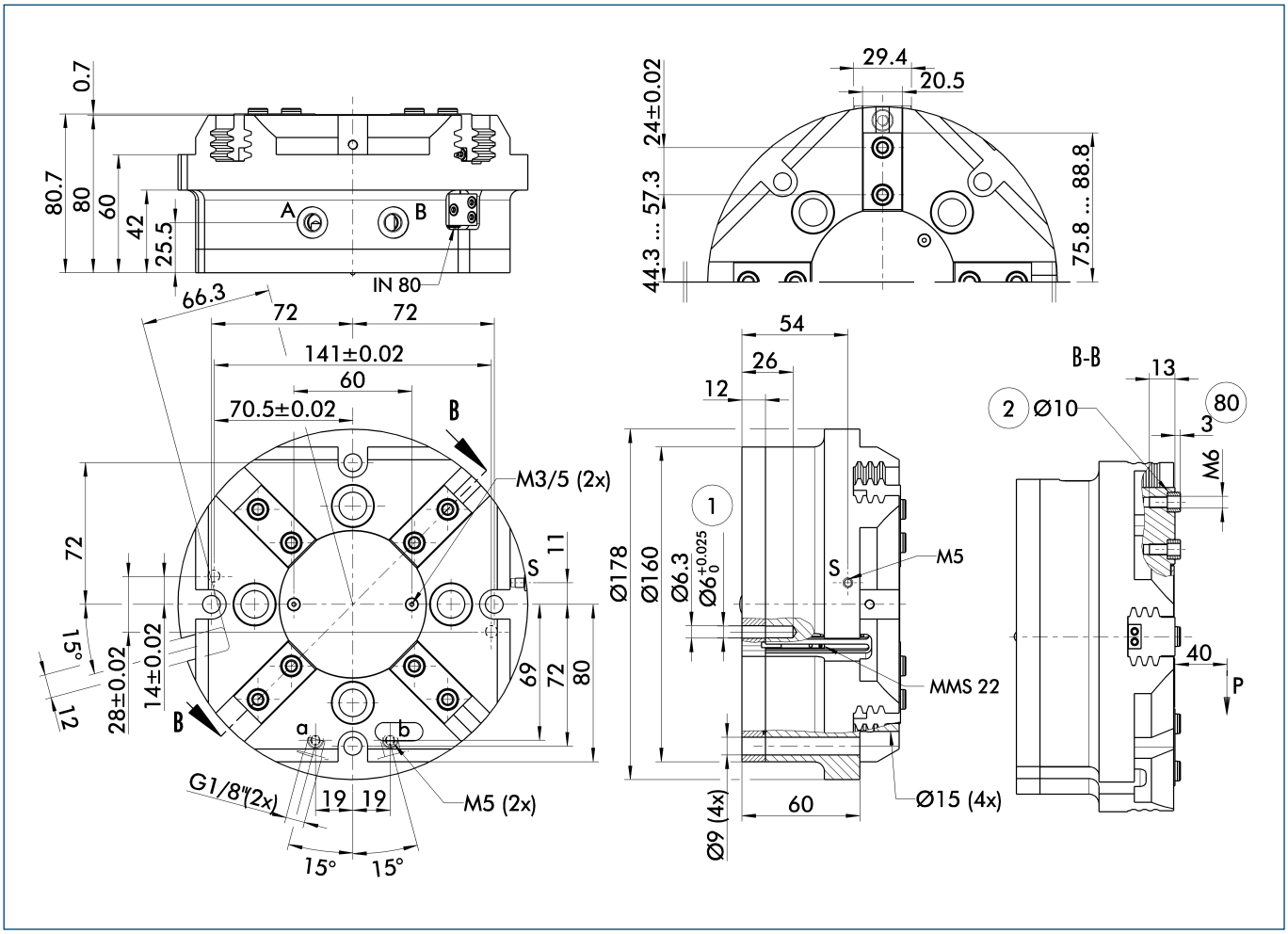


The drawing shows the gripper in the basic version with closed jaws, the dimensions do not include the options described below.

ⓘ The SDV-P pressure maintenance valve can be used as a gripping force maintenance device (see "Accessories" catalog section).

A, a Main/direct connection, gripper opening
B, b Main/direct connection, gripper closing
S Air purge connection
① Gripper connection
② Finger connection
80 Depth of the centering sleeve hole in the matching part

## Hose-free direct connection

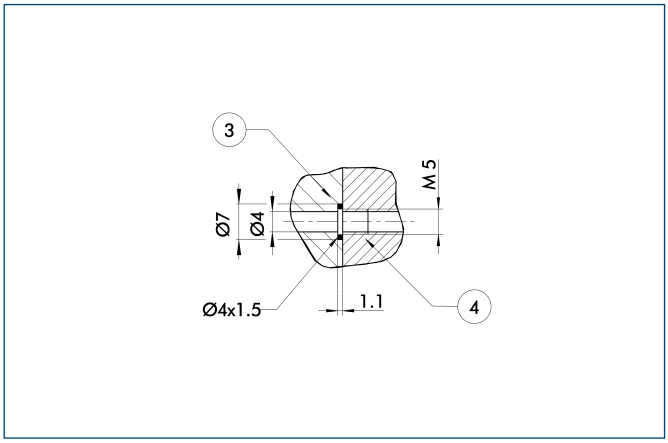


③ Adapter
④ Gripper

The direct connection is used for supplying compressed air without hoses. Instead, the pressure medium is fed through bore-holes in the mounting plate.

## Spring-loaded pressure piece

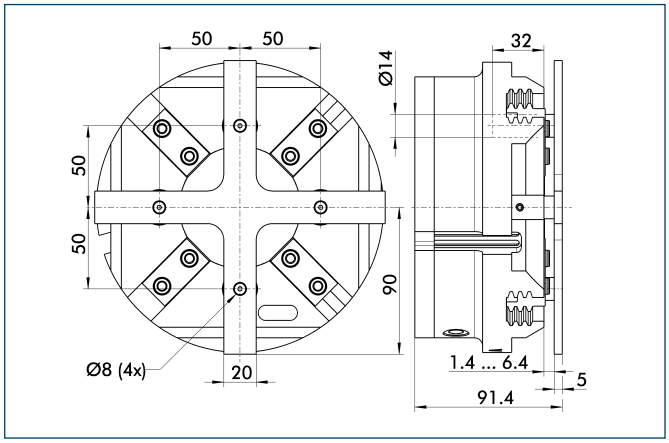


For spring-supported positioning of the workpiece against a stop after the gripper has opened. Especially developed for loading machines.

| Description | ID | Stroke | Min. force |
|---|---|---|---|
| Spring-loaded pressure piece | | | |
| A-PZV 160 | **0304014** | 5 mm | 272 N |

You can find more detailed information and individual parts of the above-mentioned accessories in the "Accessories" catalog section.

## Quick-change Jaw System

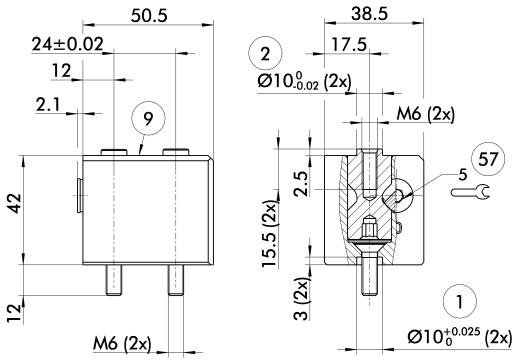


① Gripper connection
② Finger connection
⑨ For mounting screw connection diagram, see basic version
㊼ Locking

The BSWS quick-change jaw system enables top jaws to be changed on the gripper manually and rapidly. An adapter (BSWS-A) and a base (BSWS-B) are required for each gripper jaw.
For a reverse assembly without height set-up, one adapter (BSWS-A) and a kit (BSWS-U) per gripper jaw are required. Another effect of the BSWS-U is, that there are no disturbing fastening bores in the finger contour.

| Description | ID |
|---|---|
| Quick-change Jaw System adapter | |
| BSWS-A 125 | **0303028** |
| Quick-change Jaw System base | |
| BSWS-B 125 | **0303029** |
| Quick-change Jaw System reversed | |
| BSWS-U 125 | **0303044** |

## Universal intermediate jaw

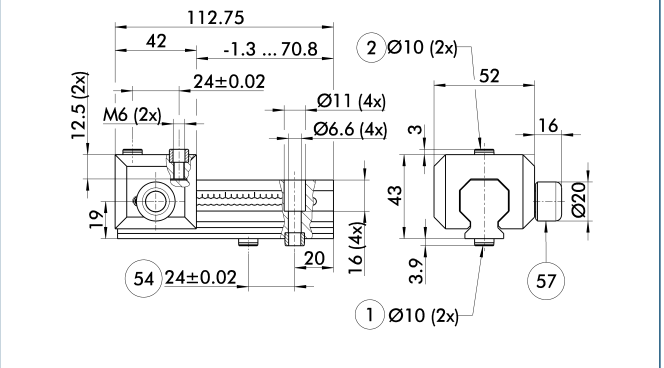


① Gripper connection
② Finger connection
㊹ Optional right or left connection
㊼ Locking

The universal intermediate jaw allows fast tool-free and reliable plugging and shifting of top jaws at the gripper.

| Description | ID | Grid dimension |
|---|---|---|
| Universal intermediate jaw | | |
| UZB 125 | **0300045** | 3 mm |
| UZB-S 125 | **5518273** | 3 mm |

ⓘ The slide UZB-S can be removed completely and has to be ordered separately. Moreover, it allows a fast jaw change.

You can find more detailed information and individual parts of the above-mentioned accessories in the “Accessories” catalog section.

## Force measuring jaws

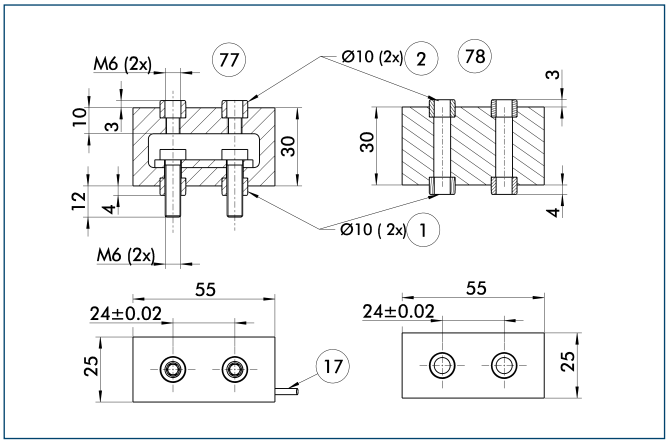


① Gripper connection
② Finger connection
⑰ Cable outlet
⑦⑦ Active intermediate jaws
⑦⑧ Passive intermediate jaws

Force measuring jaws measure gripping forces, but can also determine workpiece weights or dimensional deviations. There are active and passive intermediate jaws (FMS-ZBA or FMS-ZBP). At least one active force measuring jaw is required per gripper, the rest can be passive. For each active jaw, a FMS-A1 control unit and a FMS-A connection cable are required.

| Description | ID |
|---|---|
| Active intermediate jaws | |
| FMS-ZBA 125 | **0301838** |
| Passive intermediate jaws | |
| FMS-ZBP 125 | **0301839** |
| Electronic Processor | |
| FMS-A1 | **0301810** |
| Connection cables | |
| FMS-AK0200 | **0301820** |
| FMS-AK0500 | **0301821** |
| FMS-AK1000 | **0301822** |
| FMS-AK2000 | **0301823** |

## Finger blanks

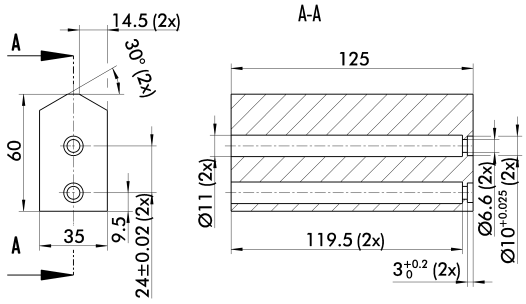


Finger blanks for customized subsequent machining

| Description | ID | Material | Scope of delivery |
|---|---|---|---|
| Finger blanks | | | |
| ABR-plus 125 | **0300013** | Aluminum | 1 |
| SBR-plus 125 | **0300023** | 16 MnCr 5 | 1 |

You can find more detailed information and individual parts of the above-mentioned accessories in the “Accessories” catalog section.

## Programmable magnetic switch

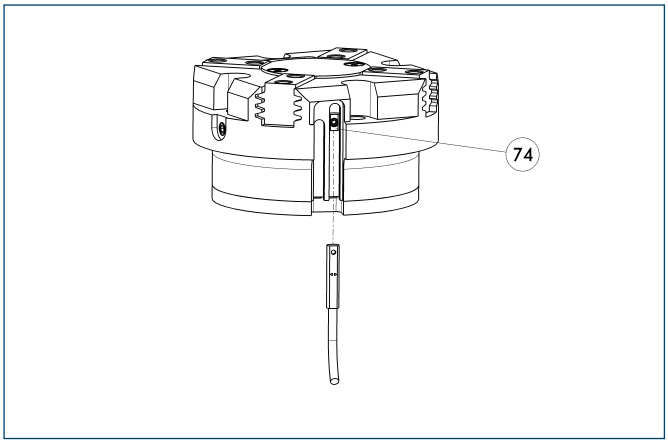


(74) Stop for MMS-P

Position monitoring with two programmable positions per sensor. The end position monitoring is mounted in the C-slot.

| Description | ID | Recommended product |
|---|---|---|
| Programmable magnetic switch | | |
| MMS-P 22-S-M8-PNP | **0301370** | • |
| MMSK-P 22-S-PNP | **0301371** | |
| Connection cables | | |
| KA BG08-L 4P-0500 | **0307767** | |
| KA BG08-L 4P-1000 | **0307768** | |
| KA BW08-L 4P-0500 | **0307765** | |
| KA BW08-L 4P-1000 | **0307766** | |
| Sensor Distributor | | |
| V2-M8-4P-2XM8-3P | **0301380** | |

ⓘ Please note the minimum permitted bending radii for the sensor cables, which are generally 35 mm.

ⓘ Per gripper one sensor (closer/NO) is required, optionally a cable extension.

## Electronic magnetic switches

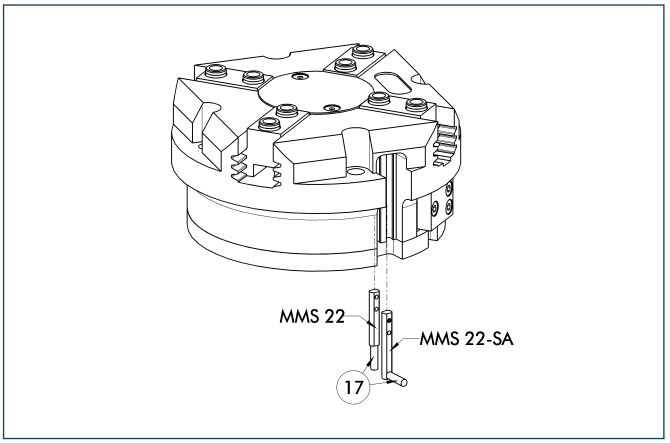


End position monitoring for mounting in the C-slot

| Description | ID | Recommended product |
|---|---|---|
| Electronic magnetic switches | | |
| MMS 22-S-M5-PNP | **0301438** | |
| MMS 22-S-M5-NPN | **0301439** | |
| MMS 22-S-M8-PNP | **0301432** | • |
| MMS 22-S-M8-NPN | **0301433** | |
| MMSK 22-S-PNP | **0301434** | |
| MMSK 22-S-NPN | **0301435** | |
| Electronic magnetic switches with lateral cable outlet | | |
| MMS 22-S-M5-PNP-SA | **0301448** | |
| MMS 22-S-M5-NPN-SA | **0301449** | |
| MMS 22-S-M8-PNP-SA | **0301442** | • |
| MMS 22-S-M8-NPN-SA | **0301443** | |
| MMSK 22-S-PNP-SA | **0301444** | |
| MMSK 22-S-NPN-SA | **0301445** | |
| Reed Switches | | |
| RMS 22-S-M8 | **0377720** | • |
| Connection cables | | |
| KA BG05-L 3P-0300 | **0301652** | |
| KA BG08-L 3P-0300-PNP | **0301622** | |
| KA BG08-L 3P-0500-PNP | **0301623** | |
| KA BW05-L 3P-0300 | **0301650** | |
| KA BW08-L 3P-0300-NPN | **0301602** | |
| KA BW08-L 3P-0300-PNP | **0301594** | |
| KA BW08-L 3P-0500-NPN | **9641116** | |
| KA BW08-L 3P-0500-PNP | **0301502** | |
| Cable extensions | | |
| KV BW08-SG08 3P-0030-PNP | **0301495** | |
| KV BW08-SG08 3P-0100-PNP | **0301496** | |
| KV BW08-SG08 3P-0200-PNP | **0301497** | |

ⓘ Two sensors (closer/NO) are required for each gripper, plus extension cables as an option.

ⓘ Please note the minimum permitted bending radii for the sensor cables, which are generally 35 mm.

You can find more detailed information and individual parts of the above-mentioned accessories in the “Accessories” catalog section.

## Inductive proximity switches

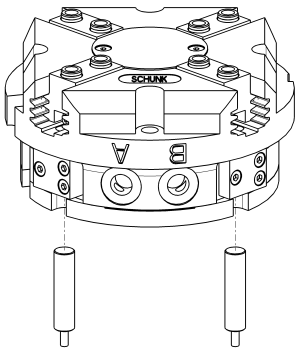


End position monitoring for direct mounting

| Description | ID | Recommended product |
|---|---|---|
| Inductive proximity switches | | |
| IN 80-S-M8 | **0301478** | • |
| IN 80-S-M12 | **0301578** | |
| INK 80-S | **0301550** | |
| IN-C 80-S-M8 | **0301475** | |
| Connection cables | | |
| KA BG08-L 3P-0300-PNP | **0301622** | |
| KA BG08-L 3P-0500-PNP | **0301623** | |
| KA BG12-L 3P-0500-PNP | **30016369** | |
| KA BW08-L 3P-0300-PNP | **0301594** | |
| KA BW08-L 3P-0500-PNP | **0301502** | |
| KA BW12-L 3P-0300-PNP | **0301503** | |
| KA BW12-L 3P-0500-PNP | **0301507** | |
| Cable extensions | | |
| KV BG12-SG12 3P-0030-PNP | **0301999** | |
| KV BG12-SG12 3P-0060-PNP | **0301998** | |
| KV BW08-SG08 3P-0030-PNP | **0301495** | |
| KV BW08-SG08 3P-0100-PNP | **0301496** | |
| KV BW08-SG08 3P-0200-PNP | **0301497** | |
| KV BW12-SG12 3P-0030-PNP | **0301595** | |
| KV BW12-SG12 3P-0100-PNP | **0301596** | |
| KV BW12-SG12 3P-0200-PNP | **0301597** | |

ⓘ Two sensors (closer/NO) are required for each gripper, plus extension cables as an option.
ⓘ Please note the minimum permitted bending radii for the sensor cables, which are generally 35 mm.

## Cylindrical Reed Switches

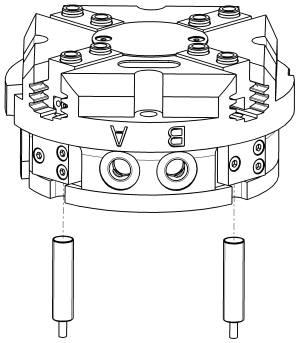


End position monitoring mounted with mounting kit

| Description | ID |
|---|---|
| Mounting kit for proximity switch | |
| AS-RMS 80<br>PGN/PZN-plus 100/125 | **0377726** |
| Reed Switches | |
| RMS 80-S-M8 | **0377721** |

ⓘ Two sensors (closer/NO) are required for each gripper, plus extension cables as an option.
ⓘ This mounting kit needs to be ordered optionally as an accessory.
ⓘ Please note the minimum permitted bending radii for the sensor cables, which are generally 35 mm.

You can find more detailed information and individual parts of the above-mentioned accessories in the “Accessories” catalog section.

## Analog position sensor

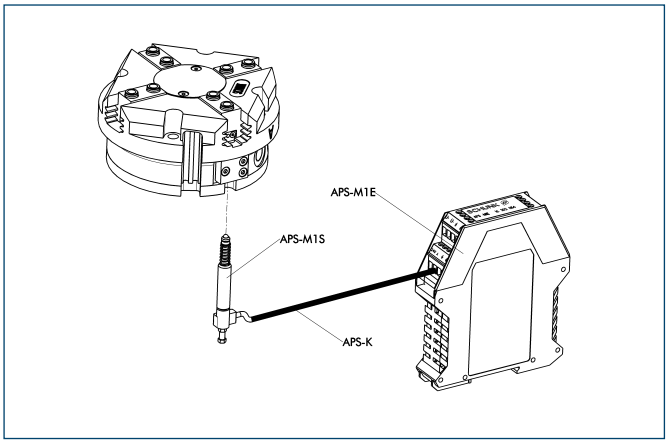


Analog multi position monitoring for any desired positions

| Description | ID |
|---|---|
| Mounting kit | |
| AS-APS-M1-125/1 | **0302081** |
| Connection cables | |
| APS-K0200 | **0302066** |
| APS-K0700 | **0302068** |
| Electronic Processor | |
| APS-M1E | **0302064** |
| Sensor | |
| APS-M1S | **0302062** |

ⓘ When using an APS system, for each gripper a mounting kit (AS-APS), an APS sensor (APS-M 1S, incl. 3 m cable) as well as an electronics (APS-M1e) are required.

ⓘ An extension cable (APS-K) can be connected between the sensor and the electronics as an option. The max. cable length between the sensor and the electronics is 10 m, between the electronics and their control unit (PLC) it is max. 1 m.

## Flexible Position Sensor

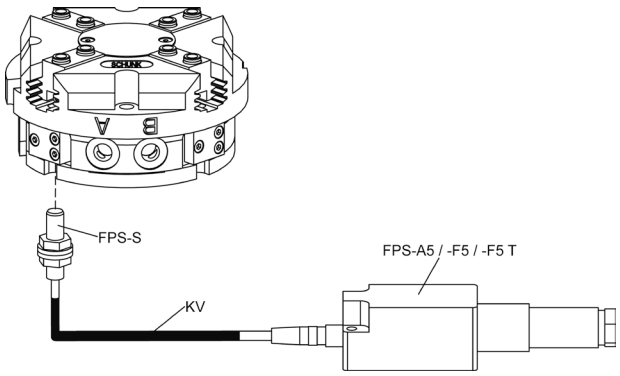


Flexible position monitoring of up to five positions

| Description | ID |
|---|---|
| Mounting kit for FPS | |
| AS-PGN/PZN-plus 125/1, PZB 160 | **0301636** |
| Electronic Processor | |
| FPS-F5 | **0301805** |
| FPS-F5 T | **0301807** |
| Sensor | |
| FPS-S M8 | **0301704** |

ⓘ When using a FPS system, a FPS sensor (FPS-S) and a control unit (FPS-F5 / F5 T or A5) are required for each gripper as well as a mounting kit (AS), if listed. Cable extensions (KV) are available as options in the “Accessories” catalog section.

You can find more detailed information and individual parts of the above-mentioned accessories in the “Accessories” catalog section.

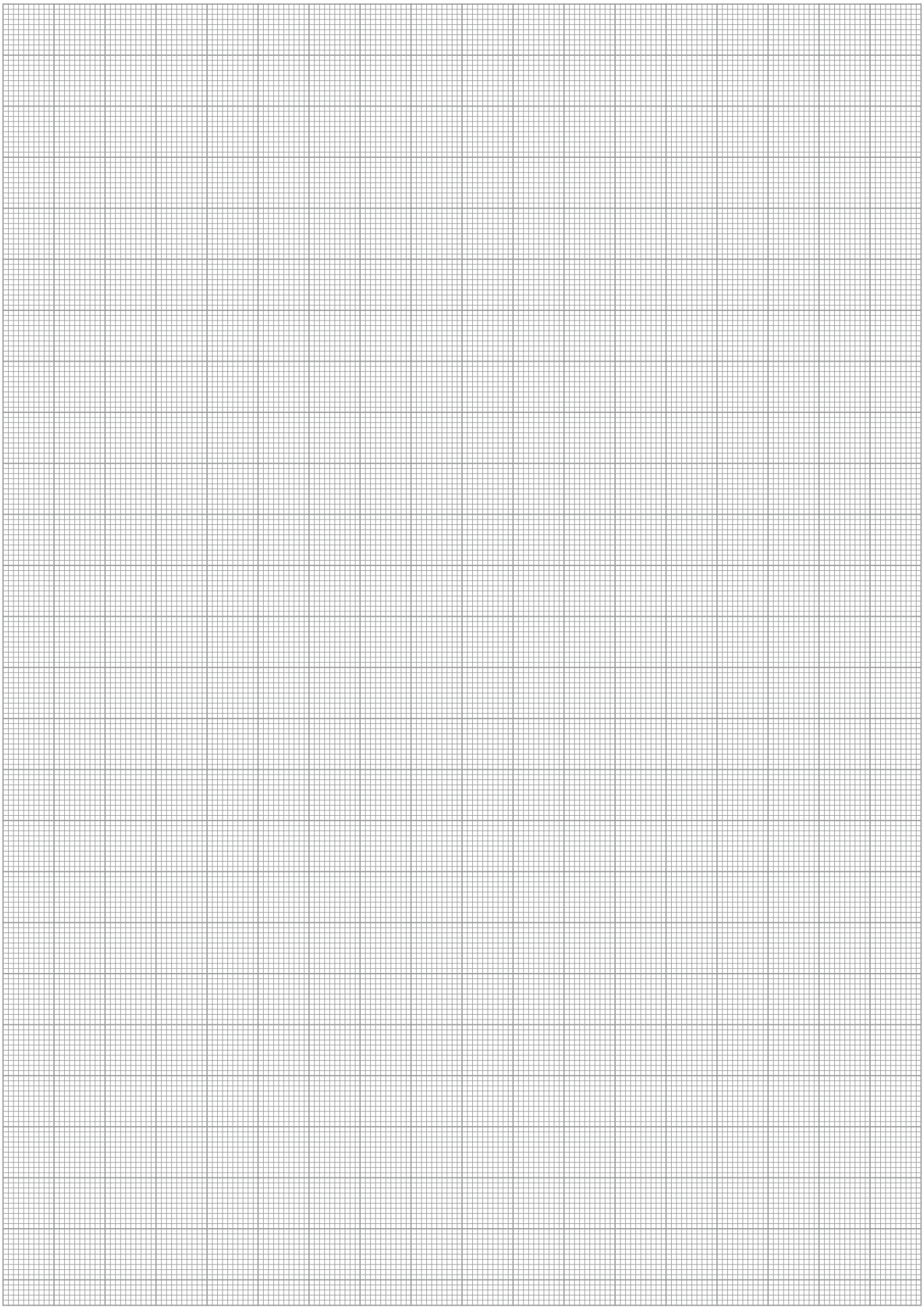

# PZV 200





## Gripping force, I.D. gripping

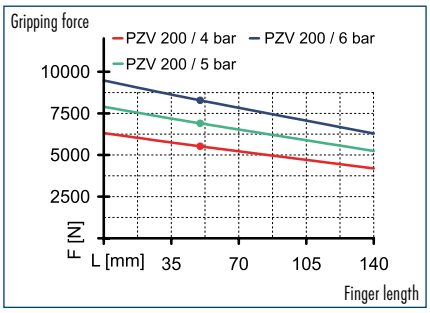


## Gripping force, O.D. gripping

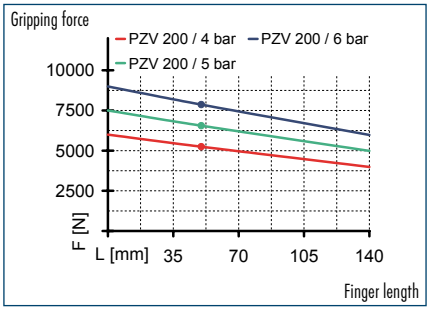


## Finger load

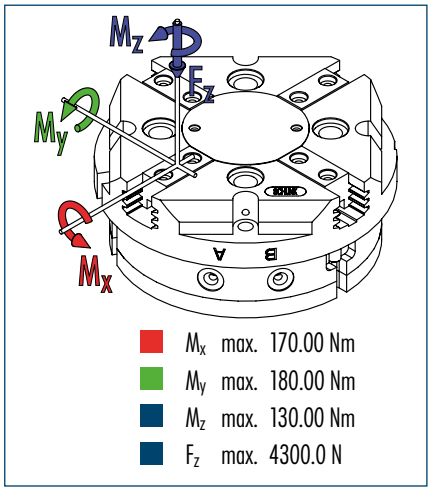


- $M_x$ max. 170.00 Nm
- $M_y$ max. 180.00 Nm
- $M_z$ max. 130.00 Nm
- $F_z$ max. 4300.0 N

ⓘ The indicated moments and forces are static values, apply per base jaw and may occur simultaneously. $M_y$ may arise in addition to the moment generated by the gripping force itself. If the max. permitted finger weight is exceeded, it is imperative to throttle the air pressure so that the jaw movement occurs without any hitting or bouncing. Service life may be reduced.

## Technical data

| Description | | PZV 200 |
|---|---|---|
| **ID** | | **0304005** |
| Stroke per finger | [mm] | 16 |
| Closing force | [N] | 6900 |
| Opening force | [N] | 7300 |
| Weight | [kg] | 10 |
| Recommended workpiece weight | [kg] | 34.5 |
| Air consumption per double stroke | [cm³] | 1040 |
| Min./max. operating pressure | [bar] | 2/6 |
| Nominal operating pressure | [bar] | 6 |
| Closing/opening time | [s] | 0.15/0.15 |
| Max. permitted finger length | [mm] | 140 |
| Max. permitted weight per finger | [kg] | 3.5 |
| IP class | | 40 |
| Min./max. ambient temperature | [°C] | -10/90 |
| Repeat accuracy | [mm] | 0.02 |

## Main view

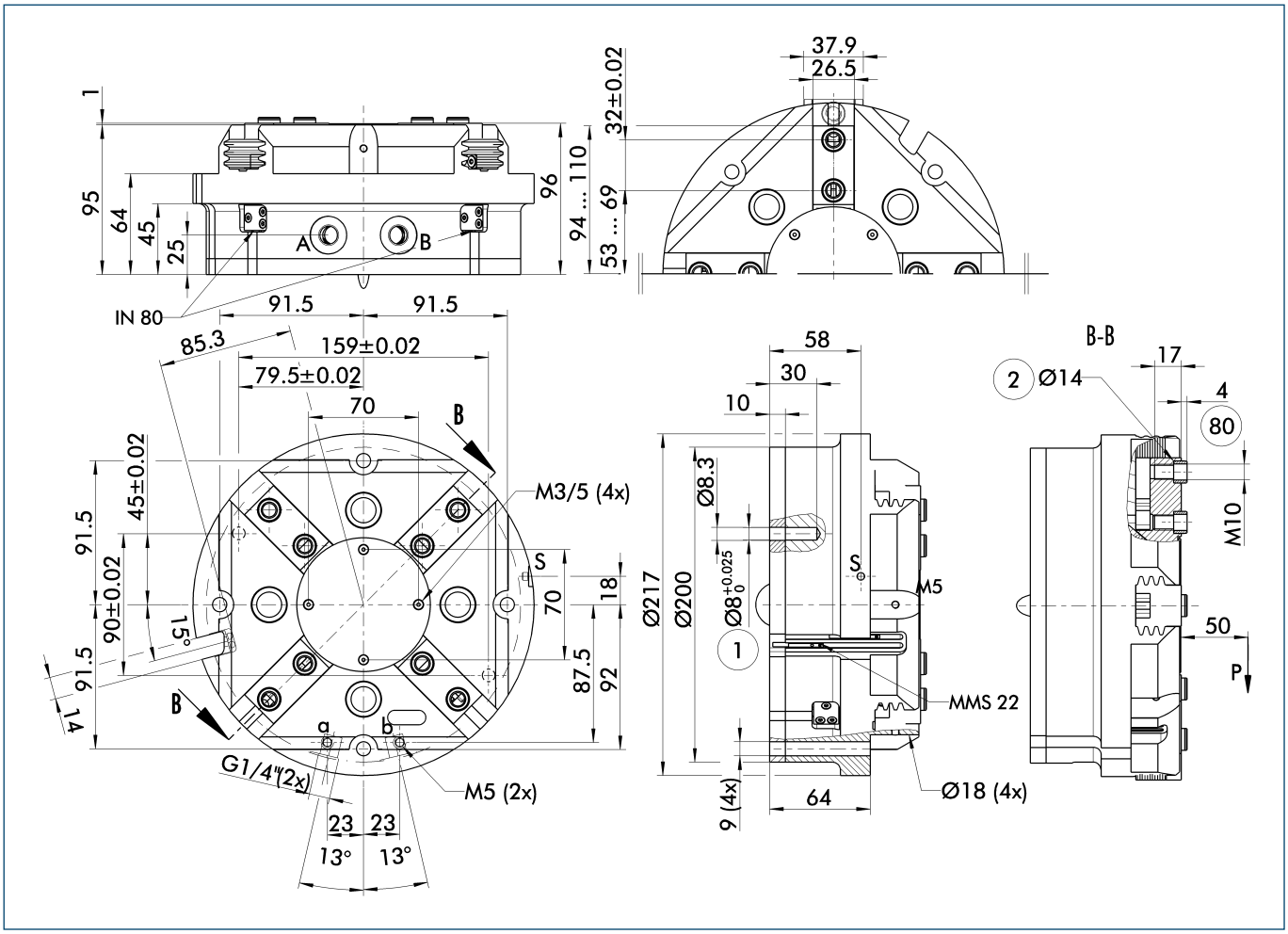


The drawing shows the gripper in the basic version with closed jaws, the dimensions do not include the options described below.

ⓘ The SDV-P pressure maintenance valve can be used as a gripping force maintenance device (see "Accessories" catalog section).

A, a Main/direct connection, gripper opening
B, b Main/direct connection, gripper closing
S Air purge connection
① Gripper connection
② Finger connection
⑧⓪ Depth of the centering sleeve hole in the matching part

## Hose-free direct connection

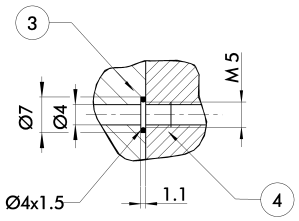


③ Adapter
④ Gripper

The direct connection is used for supplying compressed air without hoses. Instead, the pressure medium is fed through bore-holes in the mounting plate.

## Spring-loaded pressure piece

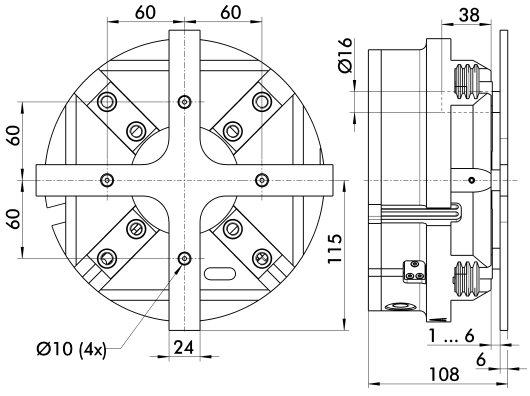


For spring-supported positioning of the workpiece against a stop after the gripper has opened. Especially developed for loading machines.

| Description | ID | Stroke | Min. force |
|---|---|---|---|
| Spring-loaded pressure piece | | | |
| A-PZV 200 | **0304015** | 5 mm | 328 N |

You can find more detailed information and individual parts of the above-mentioned accessories in the "Accessories" catalog section.

## Quick-change Jaw System

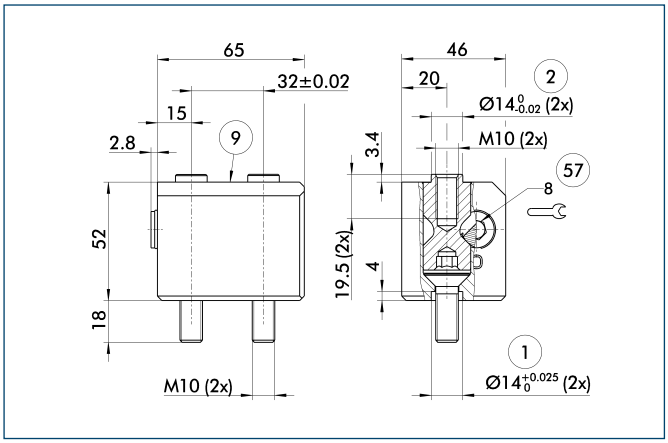


① Gripper connection
② Finger connection
⑨ For mounting screw connection diagram, see basic version
㊼ Locking

The BSWS quick-change jaw system enables top jaws to be changed on the gripper manually and rapidly. An adapter (BSWS-A) and a base (BSWS-B) are required for each gripper jaw.
For a reverse assembly without height set-up, one adapter (BSWS-A) and a kit (BSWS-U) per gripper jaw are required. Another effect of the BSWS-U is, that there are no disturbing fastening bores in the finger contour.

| Description | ID |
|---|---|
| Quick-change Jaw System adapter | |
| BSWS-A 160 | **0303030** |
| Quick-change Jaw System base | |
| BSWS-B 160 | **0303031** |
| Quick-change Jaw System reversed | |
| BSWS-U 160 | **0303045** |

## Universal intermediate jaw

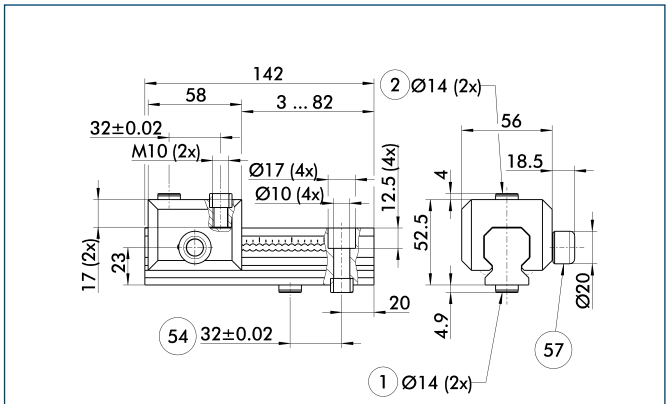


① Gripper connection
② Finger connection
㊹ Optional right or left connection
㊼ Locking

The universal intermediate jaw allows fast tool-free and reliable plugging and shifting of top jaws at the gripper.

| Description | ID | Grid dimension |
|---|---|---|
| Universal intermediate jaw | | |
| UZB 160 | **0300046** | 4 mm |
| UZB-S 160 | **5518274** | 4 mm |

ⓘ The slide UZB-S can be removed completely and has to be ordered separately. Moreover, it allows a fast jaw change.

You can find more detailed information and individual parts of the above-mentioned accessories in the “Accessories” catalog section.

## Force measuring jaws

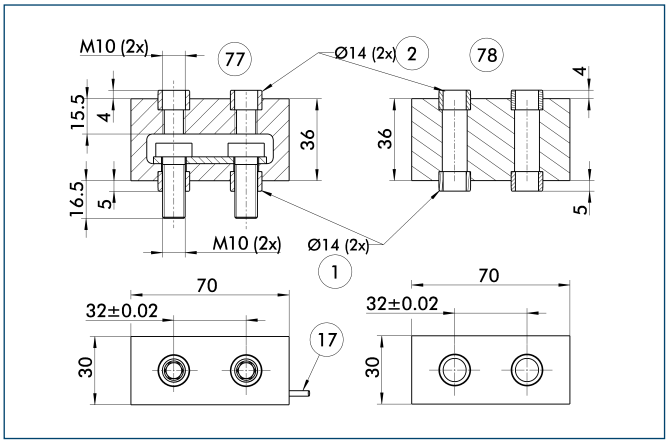


① Gripper connection
② Finger connection
⑰ Cable outlet
⑦⑦ Active intermediate jaws
⑦⑧ Passive intermediate jaws

Force measuring jaws measure gripping forces, but can also determine workpiece weights or dimensional deviations. There are active and passive intermediate jaws (FMS-ZBA or FMS-ZBP). At least one active force measuring jaw is required per gripper, the rest can be passive. For each active jaw, a FMS-A1 control unit and a FMS-A connection cable are required.

| Description | ID |
|---|---|
| Active intermediate jaws | |
| FMS-ZBA 160 | **0301840** |
| Passive intermediate jaws | |
| FMS-ZBP 160 | **0301841** |
| Electronic Processor | |
| FMS-A2 | **0301811** |
| Connection cables | |
| FMS-AK0200 | **0301820** |
| FMS-AK0500 | **0301821** |
| FMS-AK1000 | **0301822** |
| FMS-AK2000 | **0301823** |

## Finger blanks

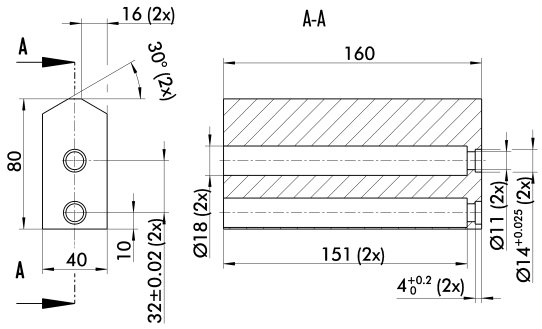


Finger blanks for customized subsequent machining

| Description | ID | Material | Scope of delivery |
|---|---|---|---|
| Finger blanks | | | |
| ABR-plus 160 | **0300014** | Aluminum | 1 |
| SBR-plus 160 | **0300024** | 16 MnCr 5 | 1 |

You can find more detailed information and individual parts of the above-mentioned accessories in the “Accessories” catalog section.

## Programmable magnetic switch

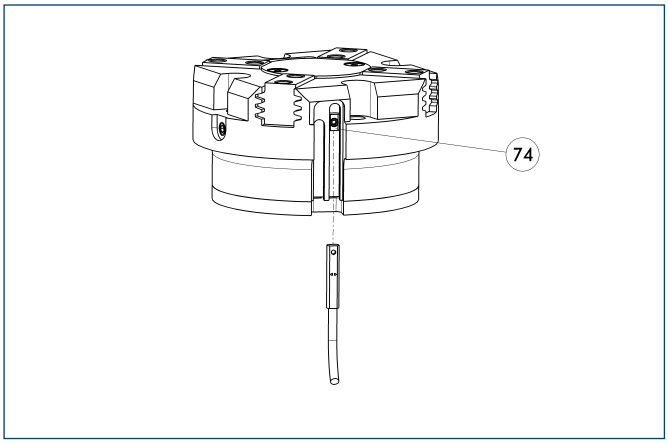


(74) Stop for MMS-P

Position monitoring with two programmable positions per sensor. The end position monitoring is mounted in the C-slot.

| Description | ID | Recommended product |
|---|---|---|
| Programmable magnetic switch | | |
| MMS-P 22-S-M8-PNP | **0301370** | • |
| MMSK-P 22-S-PNP | **0301371** | |
| Connection cables | | |
| KA BG08-L 4P-0500 | **0307767** | |
| KA BG08-L 4P-1000 | **0307768** | |
| KA BW08-L 4P-0500 | **0307765** | |
| KA BW08-L 4P-1000 | **0307766** | |
| Sensor Distributor | | |
| V2-M8-4P-2XM8-3P | **0301380** | |

ⓘ Please note the minimum permitted bending radii for the sensor cables, which are generally 35 mm.

ⓘ Per gripper one sensor (closer/NO) is required, optionally a cable extension.

## Electronic magnetic switches

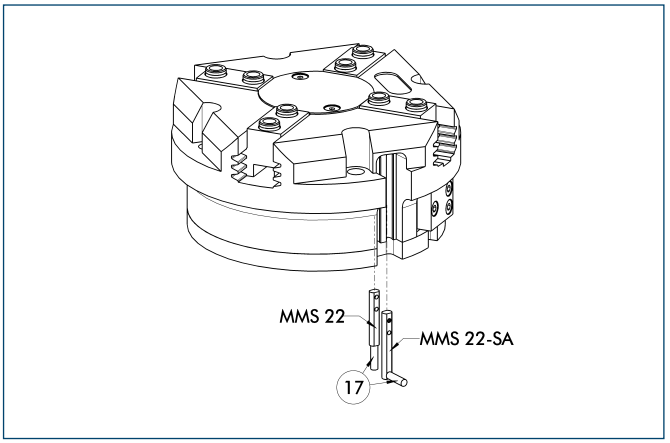


End position monitoring for mounting in the C-slot

| Description | ID | Recommended product |
|---|---|---|
| Electronic magnetic switches | | |
| MMS 22-S-M5-PNP | **0301438** | |
| MMS 22-S-M5-NPN | **0301439** | |
| MMS 22-S-M8-PNP | **0301432** | • |
| MMS 22-S-M8-NPN | **0301433** | |
| MMSK 22-S-PNP | **0301434** | |
| MMSK 22-S-NPN | **0301435** | |
| Electronic magnetic switches with lateral cable outlet | | |
| MMS 22-S-M5-PNP-SA | **0301448** | |
| MMS 22-S-M5-NPN-SA | **0301449** | |
| MMS 22-S-M8-PNP-SA | **0301442** | • |
| MMS 22-S-M8-NPN-SA | **0301443** | |
| MMSK 22-S-PNP-SA | **0301444** | |
| MMSK 22-S-NPN-SA | **0301445** | |
| Reed Switches | | |
| RMS 22-S-M8 | **0377720** | • |
| Connection cables | | |
| KA BG05-L 3P-0300 | **0301652** | |
| KA BG08-L 3P-0300-PNP | **0301622** | |
| KA BG08-L 3P-0500-PNP | **0301623** | |
| KA BW05-L 3P-0300 | **0301650** | |
| KA BW08-L 3P-0300-NPN | **0301602** | |
| KA BW08-L 3P-0300-PNP | **0301594** | |
| KA BW08-L 3P-0500-NPN | **9641116** | |
| KA BW08-L 3P-0500-PNP | **0301502** | |
| Cable extensions | | |
| KV BW08-SG08 3P-0030-PNP | **0301495** | |
| KV BW08-SG08 3P-0100-PNP | **0301496** | |
| KV BW08-SG08 3P-0200-PNP | **0301497** | |

ⓘ Two sensors (closer/NO) are required for each gripper, plus extension cables as an option.

ⓘ Please note the minimum permitted bending radii for the sensor cables, which are generally 35 mm.

You can find more detailed information and individual parts of the above-mentioned accessories in the “Accessories” catalog section.

## Inductive proximity switches

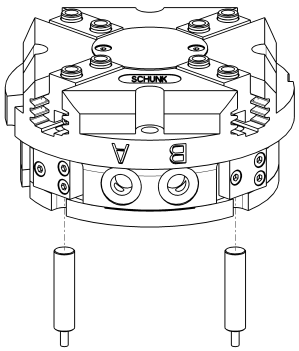


End position monitoring for direct mounting

| Description | ID | Recommended product |
|---|---|---|
| Inductive proximity switches | | |
| IN 80-S-M8 | **0301478** | • |
| IN 80-S-M12 | **0301578** | |
| INK 80-S | **0301550** | |
| IN-C 80-S-M8 | **0301475** | |
| Connection cables | | |
| KA BG08-L 3P-0300-PNP | **0301622** | |
| KA BG08-L 3P-0500-PNP | **0301623** | |
| KA BG12-L 3P-0500-PNP | **30016369** | |
| KA BW08-L 3P-0300-PNP | **0301594** | |
| KA BW08-L 3P-0500-PNP | **0301502** | |
| KA BW12-L 3P-0300-PNP | **0301503** | |
| KA BW12-L 3P-0500-PNP | **0301507** | |
| Cable extensions | | |
| KV BG12-SG12 3P-0030-PNP | **0301999** | |
| KV BG12-SG12 3P-0060-PNP | **0301998** | |
| KV BW08-SG08 3P-0030-PNP | **0301495** | |
| KV BW08-SG08 3P-0100-PNP | **0301496** | |
| KV BW08-SG08 3P-0200-PNP | **0301497** | |
| KV BW12-SG12 3P-0030-PNP | **0301595** | |
| KV BW12-SG12 3P-0100-PNP | **0301596** | |
| KV BW12-SG12 3P-0200-PNP | **0301597** | |

ⓘ Two sensors (closer/NO) are required for each gripper, plus extension cables as an option.
ⓘ Please note the minimum permitted bending radii for the sensor cables, which are generally 35 mm.

## Cylindrical Reed Switches

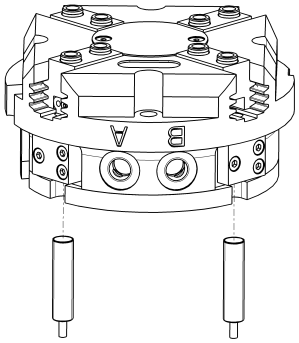


End position monitoring mounted with mounting kit

| Description | ID |
|---|---|
| Mounting kit for proximity switch | |
| AS-RMS 80<br>PGN/PZN-plus 160-380 | **0377727** |
| Reed Switches | |
| RMS 80-S-M8 | **0377721** |

ⓘ Two sensors (closer/NO) are required for each gripper, plus extension cables as an option.
ⓘ This mounting kit needs to be ordered optionally as an accessory.
ⓘ Please note the minimum permitted bending radii for the sensor cables, which are generally 35 mm.

You can find more detailed information and individual parts of the above-mentioned accessories in the “Accessories” catalog section.

## Analog position sensor

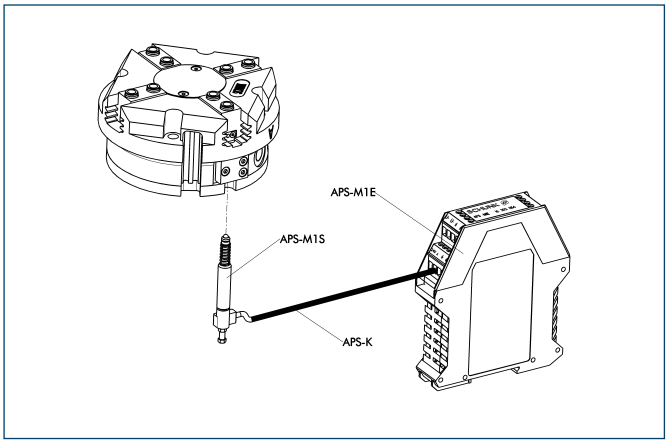


Analog multi position monitoring for any desired positions

| Description | ID |
|---|---|
| Mounting kit | |
| AS-APS-M1-160/1 and 240/2 | **0302083** |
| Connection cables | |
| APS-K0200 | **0302066** |
| APS-K0700 | **0302068** |
| Electronic Processor | |
| APS-M1E | **0302064** |
| Sensor | |
| APS-M1S | **0302062** |

ⓘ When using an APS system, for each gripper a mounting kit (AS-APS), an APS sensor (APS-M 1S, incl. 3 m cable) as well as an electronics (APS-M1e) are required.

ⓘ An extension cable (APS-K) can be connected between the sensor and the electronics as an option. The max. cable length between the sensor and the electronics is 10 m, between the electronics and their control unit (PLC) it is max. 1 m.

## Flexible Position Sensor

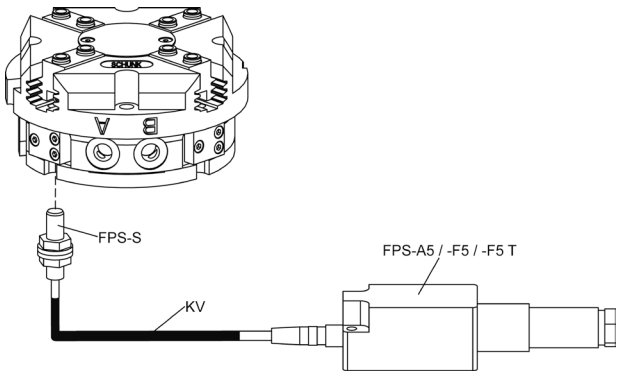


Flexible position monitoring of up to five positions

| Description | ID |
|---|---|
| Mounting kit for FPS | |
| AS-PGN/PZN-plus 160/1 | **0301638** |
| Electronic Processor | |
| FPS-F5 | **0301805** |
| FPS-F5 T | **0301807** |
| Sensor | |
| FPS-S M8 | **0301704** |

ⓘ When using a FPS system, a FPS sensor (FPS-S) and a control unit (FPS-F5 / F5 T or A5) are required for each gripper as well as a mounting kit (AS), if listed. Cable extensions (KV) are available as options in the “Accessories” catalog section.

You can find more detailed information and individual parts of the above-mentioned accessories in the “Accessories” catalog section.

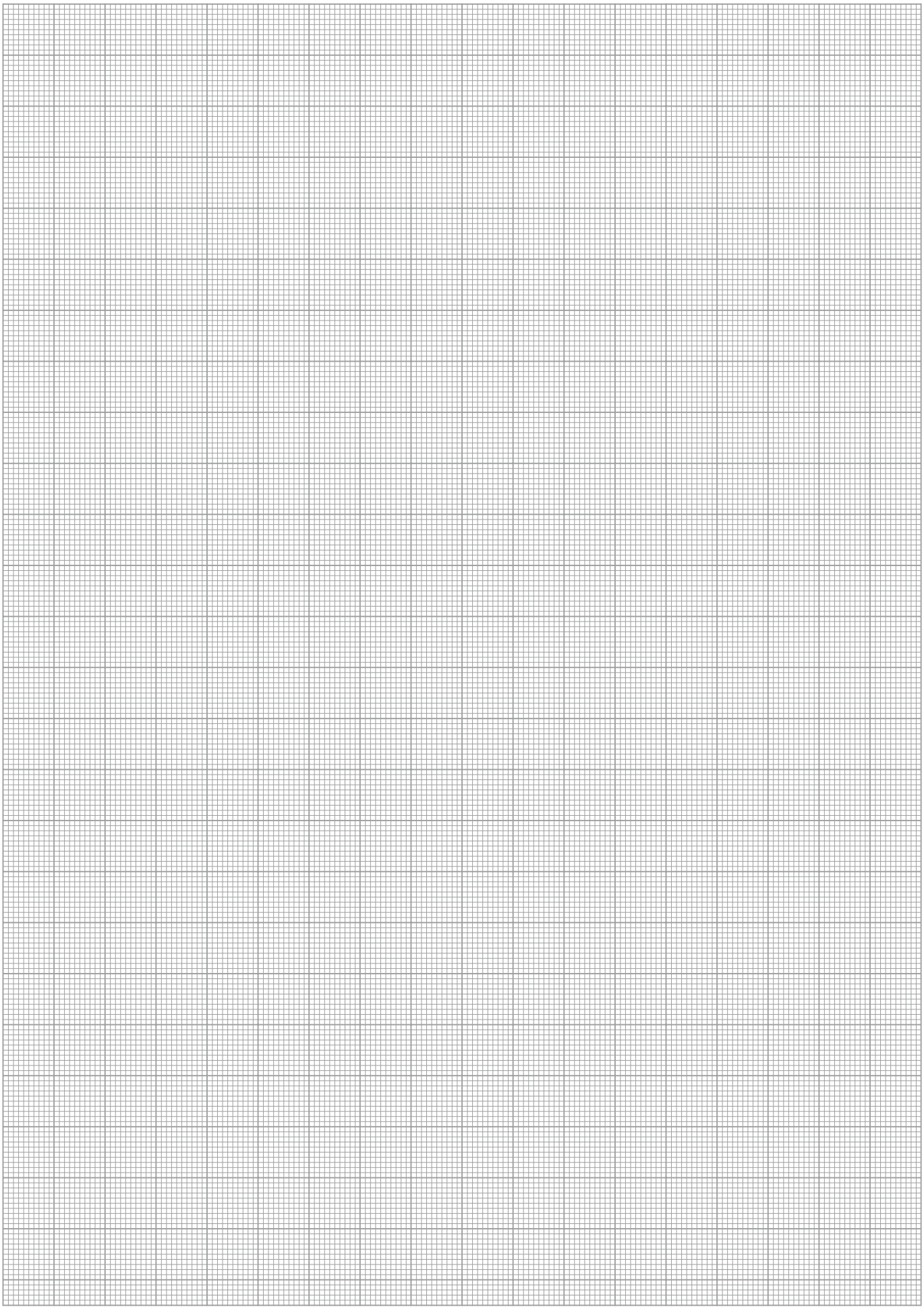

# Pneumatic Gripping Modules

## Pneumatic • 2-Finger Angular Gripper

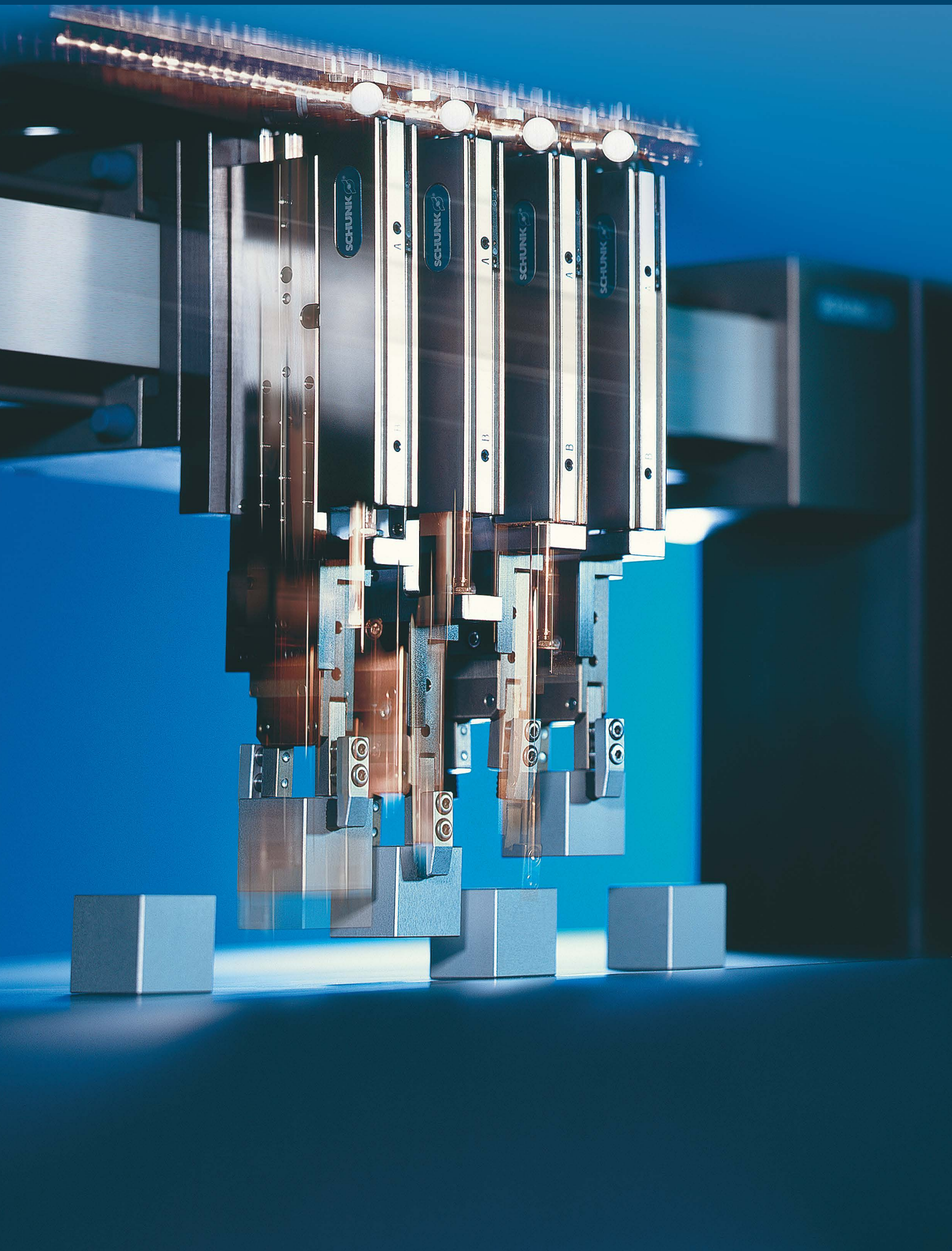

2-FINGER ANGULAR GRIPPER


| Series | Size | Page |
|---|---|---|
| **Angular Gripper for small components** | | |
| SGB | | 884 |
| SGB | 32 | 888 |
| SGB | 40 | 892 |
| SGB | 50 | 896 |
| SWG | | 900 |
| SWG | 10 | 904 |
| SWG | 12 | 906 |
| SWG | 16 | 908 |
| SWG | 20 | 912 |
| SWG | 25 | 916 |
| SWG | 32 | 920 |
| SWG | 40 | 924 |
| SWG | 50 | 928 |
| **Universal Angular Gripper** | | |
| LGW | | 932 |
| LGW | 10 | 936 |
| LGW | 16 | 938 |
| LGW | 25 | 940 |
| LGW | 32 | 942 |
| LGW | 40 | 944 |
| PWG-S | | 946 |
| PWG-S | 40 | 950 |
| PWG-S | 60 | 954 |
| PWG-S | 80 | 958 |
| PWG | | 962 |
| PWG | 65 | 966 |
| PWG | 90 | 972 |
| PWG | 130 | 976 |
| PWG | 170 | 982 |
| PWG | 230 | 988 |

**Sizes**
32 ... 50

**Weight**
0.04 kg ... 0.06 kg

**Gripping moment**
0.9 Nm ... 4.95 Nm

**Angle per jaw**
8°

**Workpiece weight**
0.2 kg ... 0.8 kg

## Application example




Rotary unit for simultaneous rotation of two small components by 90°

1 2-Finger Angular Gripper SGB

2 SRU-mini Miniature Rotary Unit

## Angular Gripper for small components

small, plastic angular gripper with spring return and single-acting piston

## Field of application

for universal use in clean and slightly dirty environments, with special requirements for the corrosion resistance and antistatic properties of the gripper unit

## Your advantages and benefits

**Housing of carbon-fiber-reinforced plastic**
making the gripper extremely light and free from corrosion

**Single-acting double piston drive with lever gear drive**
for high power transmission and synchronized gripping

**Basic version generally equipped with a pressure piece**
for the spring-assisted pressing of workpieces

**favorable in price**
especially suitable for low-budget applications




## General note to the series

**Principle of function**
single-acting cylinder piston with lever gear drive and spring reset

**Housing material**
carbon-fiber-reinforced plastic with metal functional parts

**Base jaw material**
carbon-fiber-reinforced plastic

**Actuation**
pneumatic, with filtered compressed air (10 microns): dry, lubricated or non-lubricated
Pressure medium: Required quality class of compressed air according to DIN ISO 8573-1: 6 4 4

**Warranty**
24 months (details, general terms and conditions and operation manuals can be downloaded under www.schunk.com)

**Scope of delivery**
integrated, spring-loaded locating plate, assembly and operating manual with manufacturer's declaration

**Gripping force maintenance device**
possible with SDV-P pressure maintenance valve

## Sectional diagram

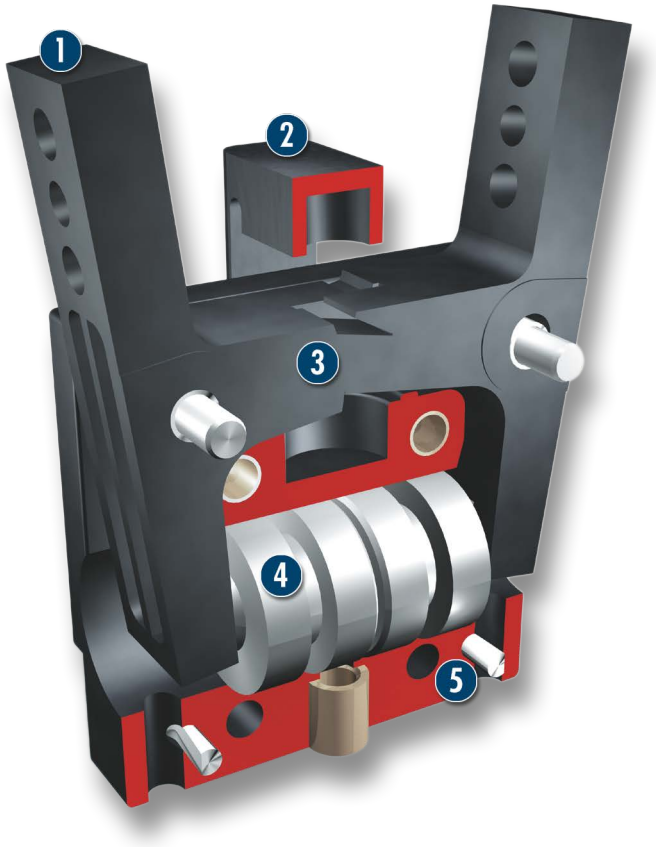


1 **Base jaw**
for the connection of workpiece-specific gripper fingers

2 **Pressure piece**
spring-loaded, for pressing workpieces into place

3 **Lever mechanism**
for precise and synchronized gripping

4 **Drive**
single-acting double piston system with spring return

5 **Housing**
weight-reduced due to the use of plastics

## Functional description

The two horizontally arranged pistons are pressed away from each other by compressed air.
The base jaws are opened at an angle and in a synchronized fashion by the bearing-mounted lever mechanism.
Reset is done by compression spring.

## Options and special information

The use of carbon-fiber-reinforced plastics endows this gripper with a very low weight and a disproportionately high gripping force.

## Accessories

Accessories from SCHUNK – the suitable supplement for maximum functionality, reliability and performance of all automation modules.

### Pressure maintenance valve



### Fittings



### Inductive proximity switches



### Sensor cables



### Plastic inserts






### Sensor Distributor

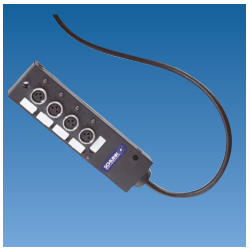

### Gripper pads

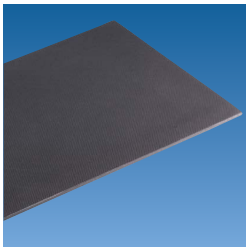

ⓘ For the exact size of the required accessories, availability of this size and the designation and ID, please refer to the additional views at the end of the size in question. You will find more detailed information on our accessory range in the “Accessories” catalog section.

## General note to the series

### Gripping moment

Gripping moment is the arithmetic total of gripping moments for each claw jaw.

### Finger length

The finger length is measured from the upper edge of the gripper housing in direction to the main axis. If the max. admissible finger length is exceeded, the speed of jaw motions have to be reduced and/or the opening angle has to be diminished, as it is done with heavy fingers. The service life of the gripper can shorten.

### Repeat accuracy

is defined as the spread of the limit position after 100 consecutive strokes.

### Workpiece weight

The recommended workpiece weight is calculated for a force-type connection with a coefficient of friction of 0.1 and a safety factor of 2 against slippage of the workpiece on acceleration due to gravity g. Considerably heavier workpiece weights are permitted with form-fit gripping.

### Closing and opening times

Closing and opening times are purely the times that the base jaws or fingers are in motion. Valve switching times, hose filling times or PLC reaction times are not included in the above times and must be taken into consideration when determining cycle times.

# SGB 32





## Gripping force, O.D. gripping

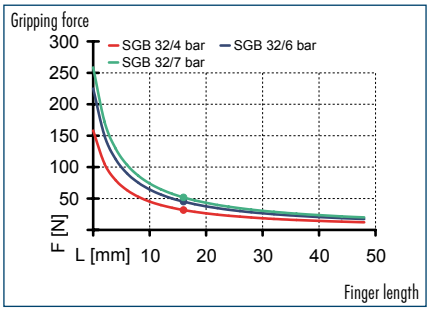


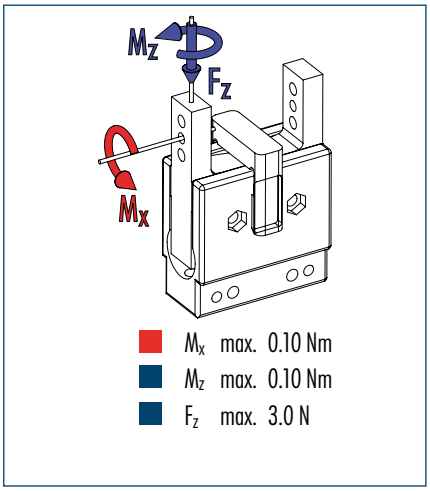


ⓘ The indicated moments and forces are statical values, apply for each base jaw and should not appear simultaneously. If the maximum admissible finger weight is exceeded, throttling is necessary in order to ensure a smooth jaw motion without jerks or bounces. The life-time may reduce.

## Technical data

| Description | | SGB 32 |
|---|---|---|
| ID | | 0305199 |
| Opening angle per jaw | [°] | 8 |
| Closed angle per jaw up to | [°] | 2 |
| Closing moment | [Nm] | 0.9 |
| Weight | [kg] | 0.04 |
| Recommended workpiece weight | [kg] | 0.2 |
| Air consumption per double stroke | [cm³] | 0.5 |
| Min./max. operating pressure | [bar] | 4/7 |
| Nominal operating pressure | [bar] | 6 |
| Closing/opening time | [s] | 0.06/0.04 |
| Max. permitted finger length | [mm] | 32 |
| Max. permitted weight per finger | [kg] | 0.03 |
| IP class | | 20 |
| Min./max. ambient temperature | [°C] | -10/90 |
| Repeat accuracy | [mm] | 0.1 |
| Min. pressure force | [N] | 2 |
| Pressure stroke | [mm] | 3.2 |

## Main view

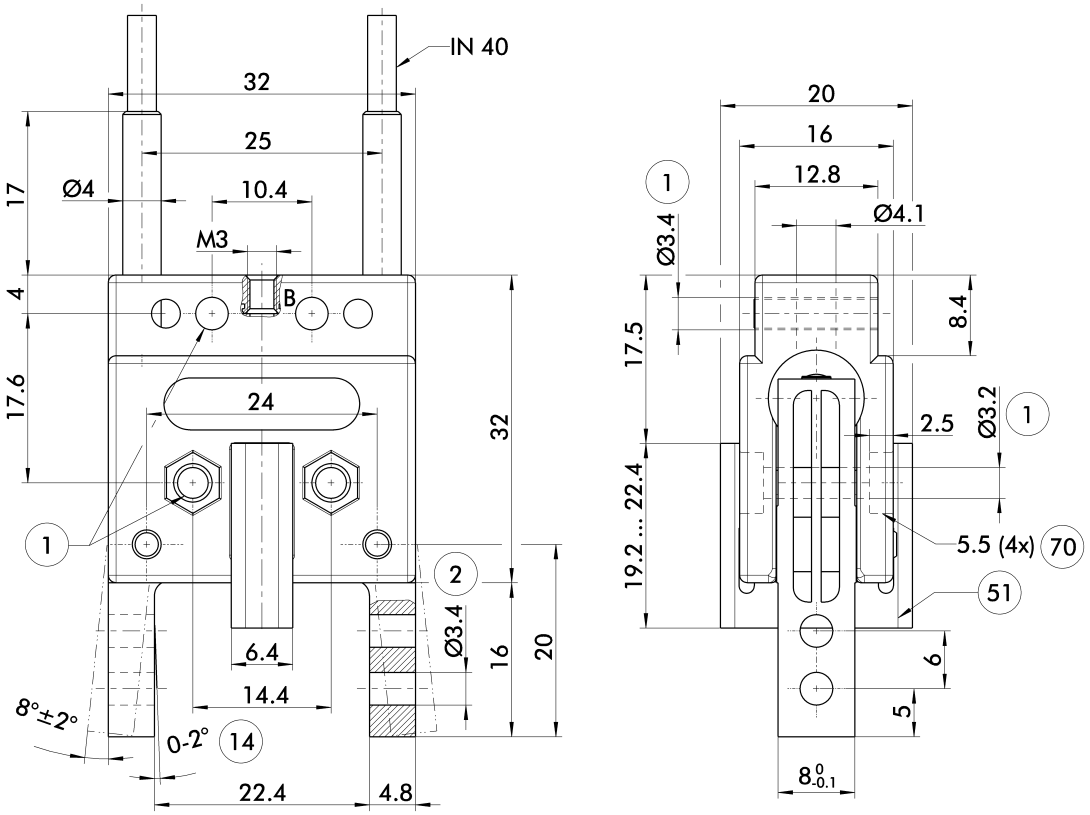


The drawing shows the gripper in the basic version with closed jaws, the dimensions do not include the options described below.

ⓘ The SDV-P pressure maintenance valve can be used as a gripping force maintenance device (see "Accessories" catalog section).

① Gripper connection
② Finger connection
⑭ Clamping reserve per finger
㊿① Pressure piece
㊿⑩ Wrench size

## Mounting

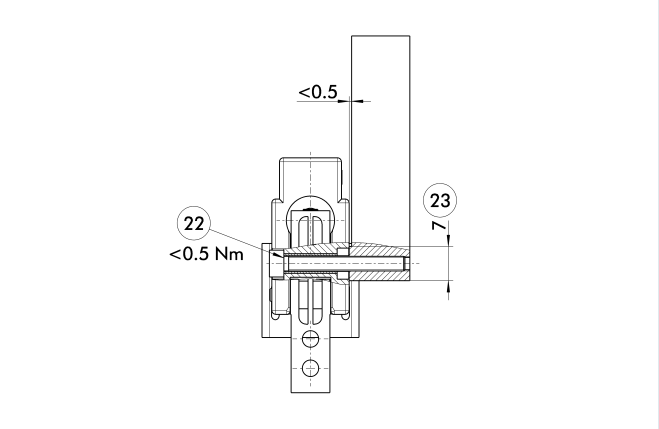


㉒ Tightening torque
㉓ Width of path

Recommended for achieving distortion-free gripper mounting

## Inductive proximity switches

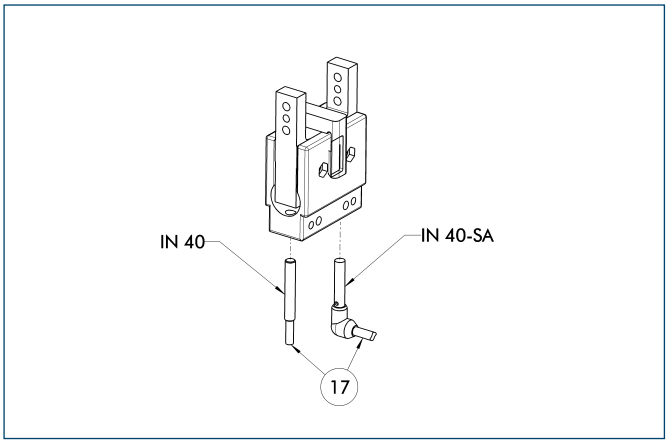


⑰ Cable outlet

End position monitoring for direct mounting

| Description | ID | Recommended product |
|---|---|---|
| Inductive proximity switches | | |
| IN 40-S-M8 | **0301474** | • |
| IN 40-S-M12 | **0301574** | |
| INK 40-S | **0301555** | |
| IN 40-O-M8 | **0301484** | • |
| IN 40-O-M12 | **0301584** | |
| INK 40-O | **0301556** | |
| Inductive proximity switch with lateral outlet | | |
| IN 40-S-M12-SA | **0301577** | |
| IN 40-S-M8-SA | **0301473** | • |
| INK 40-S-SA | **0301565** | |
| Connection cables | | |
| KA BG08-L 3P-0300-PNP | **0301622** | |
| KA BG08-L 3P-0500-PNP | **0301623** | |
| KA BG12-L 3P-0500-PNP | **30016369** | |
| KA BW08-L 3P-0300-PNP | **0301594** | |
| KA BW08-L 3P-0500-PNP | **0301502** | |
| KA BW12-L 3P-0300-PNP | **0301503** | |
| KA BW12-L 3P-0500-PNP | **0301507** | |
| Cable extensions | | |
| KV BG12-SG12 3P-0030-PNP | **0301999** | |
| KV BG12-SG12 3P-0060-PNP | **0301998** | |
| KV BW08-SG08 3P-0030-PNP | **0301495** | |
| KV BW08-SG08 3P-0100-PNP | **0301496** | |
| KV BW08-SG08 3P-0200-PNP | **0301497** | |
| KV BW12-SG12 3P-0030-PNP | **0301595** | |
| KV BW12-SG12 3P-0100-PNP | **0301596** | |
| KV BW12-SG12 3P-0200-PNP | **0301597** | |

ⓘ Two sensors, one NO and one NC contact, are required for each gripper, plus extension cables as an option.

ⓘ Please note the minimum permitted bending radii for the sensor cables, which are generally 35 mm.

You can find more detailed information and individual parts of the above-mentioned accessories in the “Accessories” catalog section.

# SGB 40

**Pneumatic • 2-Finger Angular Gripper • Angular Gripper for small components**




## Gripping force, O.D. gripping

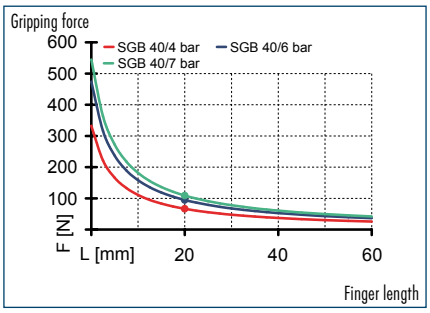


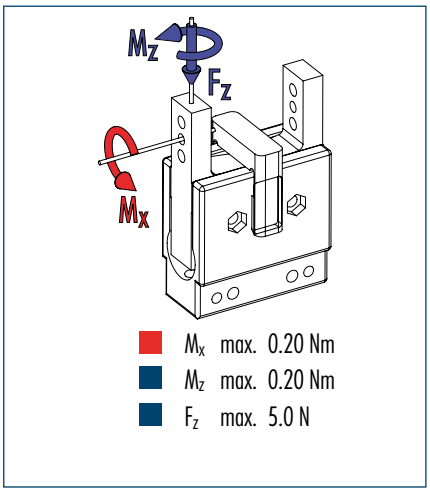


ⓘ The indicated moments and forces are statical values, apply for each base jaw and should not appear simultaneously. If the maximum admissible finger weight is exceeded, throttling is necessary in order to ensure a smooth jaw motion without jerks or bounces. The life-time may reduce.

## Technical data

| Description | | SGB 40 |
|---|---|---|
| **ID** | | **0305200** |
| Opening angle per jaw | [°] | 8 |
| Closed angle per jaw up to | [°] | 2 |
| Closing moment | [Nm] | 2.37 |
| Weight | [kg] | 0.05 |
| Recommended workpiece weight | [kg] | 0.4 |
| Air consumption per double stroke | [cm³] | 1 |
| Min./max. operating pressure | [bar] | 4/7 |
| Nominal operating pressure | [bar] | 6 |
| Closing/opening time | [s] | 0.08/0.05 |
| Max. permitted finger length | [mm] | 40 |
| Max. permitted weight per finger | [kg] | 0.05 |
| IP class | | 20 |
| Min./max. ambient temperature | [°C] | -10/90 |
| Repeat accuracy | [mm] | 0.1 |
| Min. pressure force | [N] | 4 |
| Pressure stroke | [mm] | 4 |

## Main view

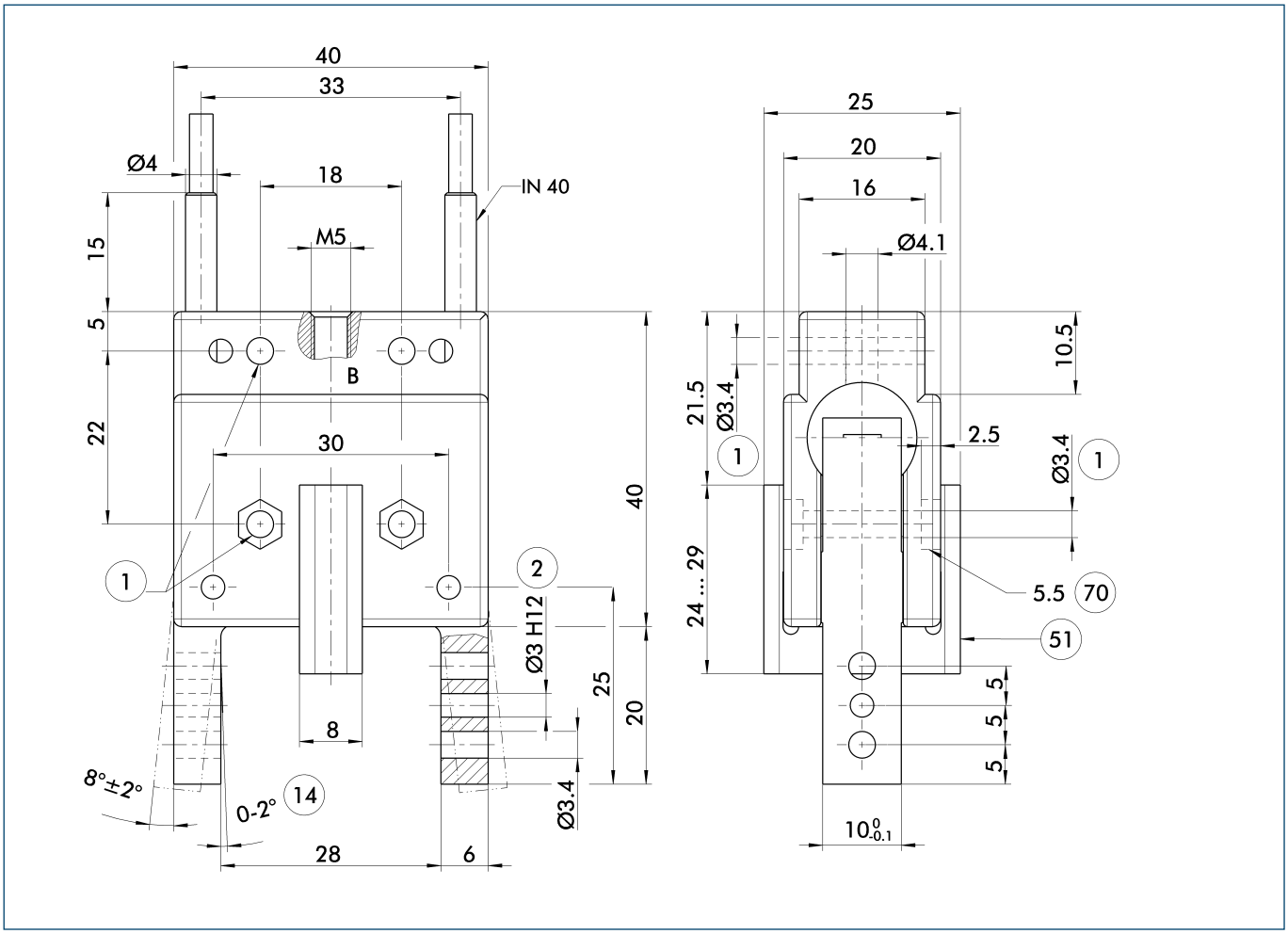


The drawing shows the gripper in the basic version with closed jaws, the dimensions do not include the options described below.

ⓘ The SDV-P pressure maintenance valve can be used as a gripping force maintenance device (see "Accessories" catalog section).

① Gripper connection
② Finger connection
⑭ Clamping reserve per finger
㊿ Pressure piece
㊿ Wrench size

## Mounting

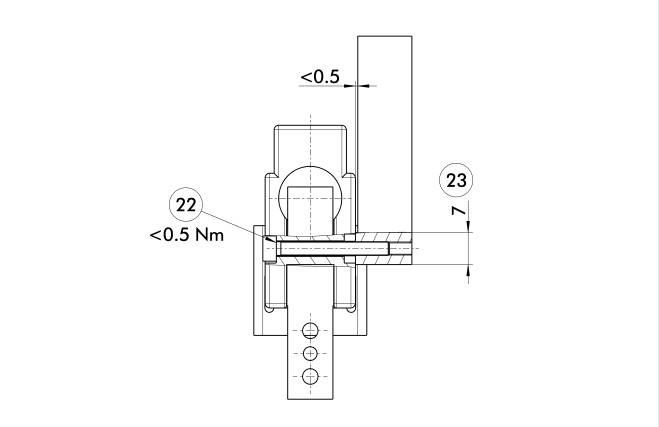


㉒ Tightening torque
㉓ Width of path

Recommended for achieving distortion-free gripper mounting

## Inductive proximity switches

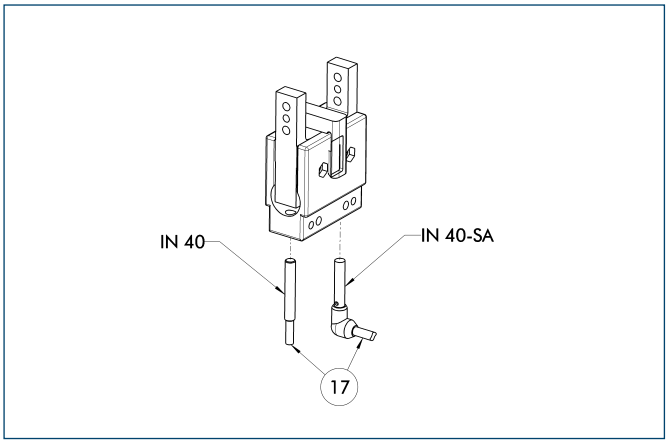


⑰ Cable outlet

End position monitoring for direct mounting

| Description | ID | Recommended product |
|---|---|---|
| Inductive proximity switches | | |
| IN 40-S-M8 | **0301474** | • |
| IN 40-S-M12 | **0301574** | |
| INK 40-S | **0301555** | |
| IN 40-O-M8 | **0301484** | • |
| IN 40-O-M12 | **0301584** | |
| INK 40-O | **0301556** | |
| Inductive proximity switch with lateral outlet | | |
| IN 40-S-M12-SA | **0301577** | |
| IN 40-S-M8-SA | **0301473** | • |
| INK 40-S-SA | **0301565** | |
| Connection cables | | |
| KA BG08-L 3P-0300-PNP | **0301622** | |
| KA BG08-L 3P-0500-PNP | **0301623** | |
| KA BG12-L 3P-0500-PNP | **30016369** | |
| KA BW08-L 3P-0300-PNP | **0301594** | |
| KA BW08-L 3P-0500-PNP | **0301502** | |
| KA BW12-L 3P-0300-PNP | **0301503** | |
| KA BW12-L 3P-0500-PNP | **0301507** | |
| Cable extensions | | |
| KV BG12-SG12 3P-0030-PNP | **0301999** | |
| KV BG12-SG12 3P-0060-PNP | **0301998** | |
| KV BW08-SG08 3P-0030-PNP | **0301495** | |
| KV BW08-SG08 3P-0100-PNP | **0301496** | |
| KV BW08-SG08 3P-0200-PNP | **0301497** | |
| KV BW12-SG12 3P-0030-PNP | **0301595** | |
| KV BW12-SG12 3P-0100-PNP | **0301596** | |
| KV BW12-SG12 3P-0200-PNP | **0301597** | |

ⓘ Two sensors, one NO and one NC contact, are required for each gripper, plus extension cables as an option.

ⓘ Please note the minimum permitted bending radii for the sensor cables, which are generally 35 mm.

You can find more detailed information and individual parts of the above-mentioned accessories in the “Accessories” catalog section.

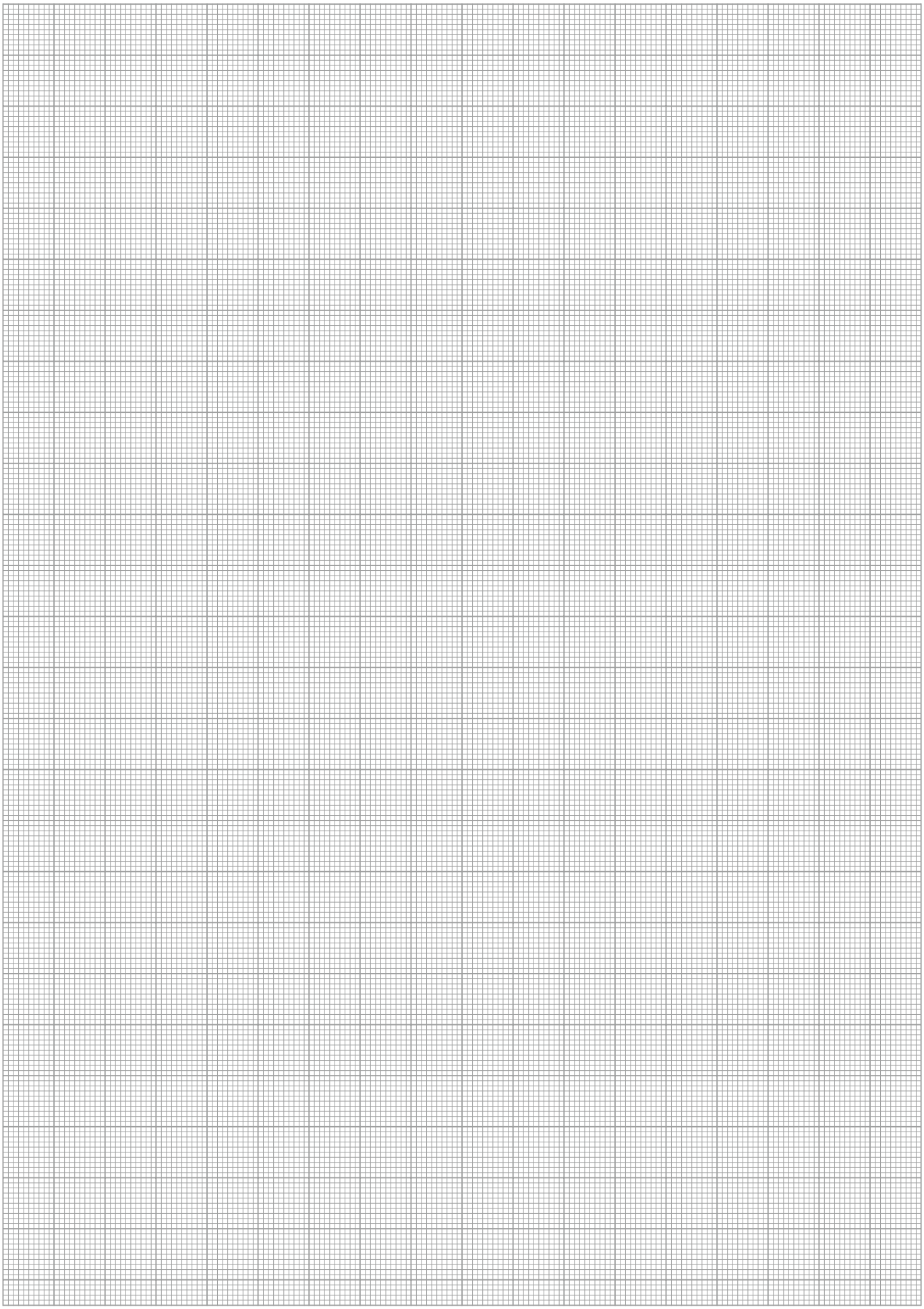

# SGB 50






## Gripping force, O.D. gripping

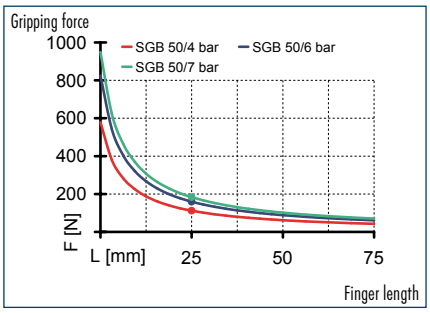


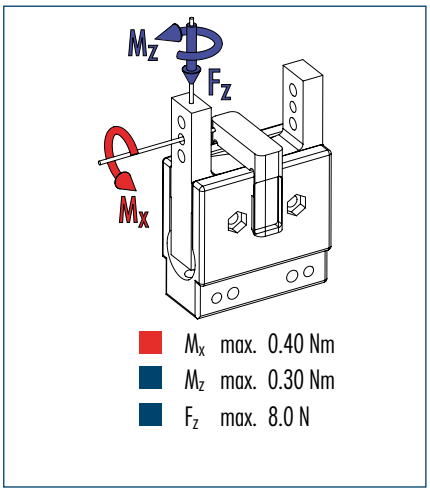


ⓘ The indicated moments and forces are statical values, apply for each base jaw and should not appear simultaneously. If the maximum admissible finger weight is exceeded, throttling is necessary in order to ensure a smooth jaw motion without jerks or bounces. The life-time may reduce.

## Technical data

| Description | | SGB 50 |
|---|---|---|
| ID | | 0305201 |
| Opening angle per jaw | [°] | 8 |
| Closed angle per jaw up to | [°] | 2 |
| Closing moment | [Nm] | 4.95 |
| Weight | [kg] | 0.06 |
| Recommended workpiece weight | [kg] | 0.8 |
| Air consumption per double stroke | [cm³] | 1.8 |
| Min./max. operating pressure | [bar] | 4/7 |
| Nominal operating pressure | [bar] | 6 |
| Closing/opening time | [s] | 0.08/0.05 |
| Max. permitted finger length | [mm] | 50 |
| Max. permitted weight per finger | [kg] | 0.07 |
| IP class | | 20 |
| Min./max. ambient temperature | [°C] | -10/90 |
| Repeat accuracy | [mm] | 0.1 |
| Min. pressure force | [N] | 4 |
| Pressure stroke | [mm] | 5 |

## Main view

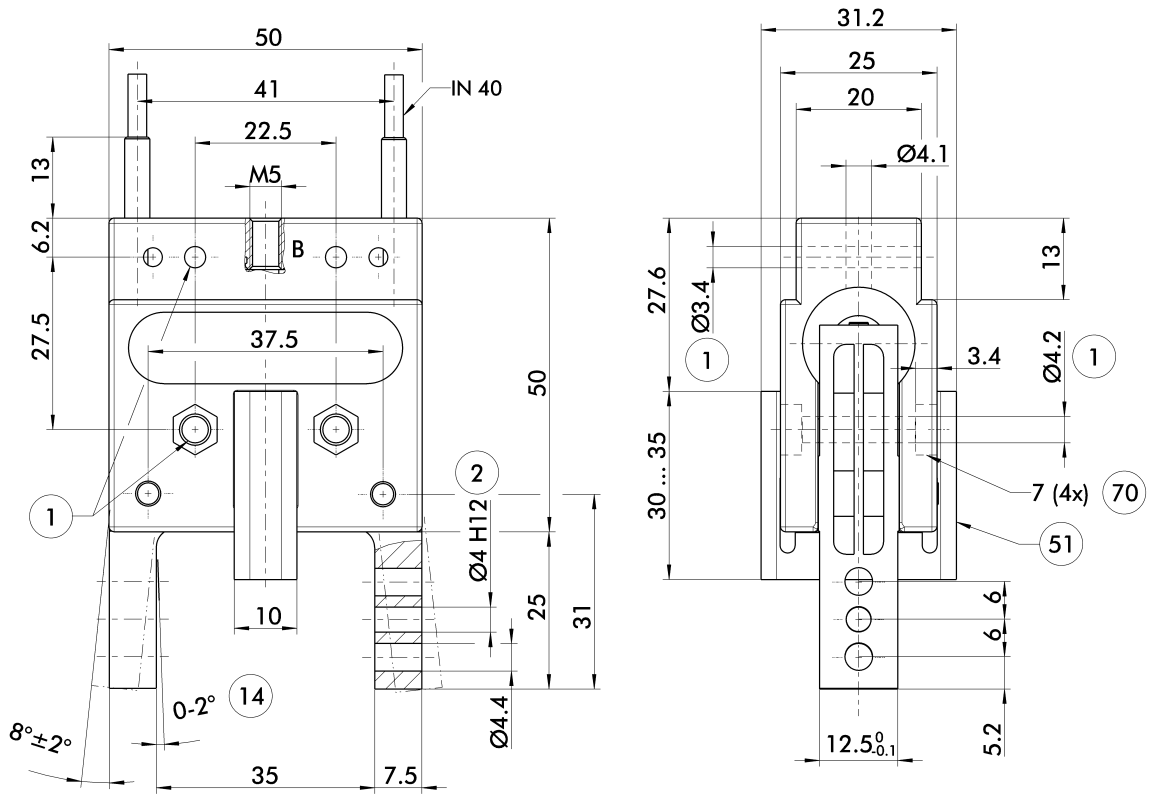


The drawing shows the gripper in the basic version with closed jaws, the dimensions do not include the options described below.

ⓘ The SDV-P pressure maintenance valve can be used as a gripping force maintenance device (see "Accessories" catalog section).

① Gripper connection
② Finger connection
⑭ Clamping reserve per finger
⑤① Pressure piece
⑦⓪ Wrench size

## Mounting

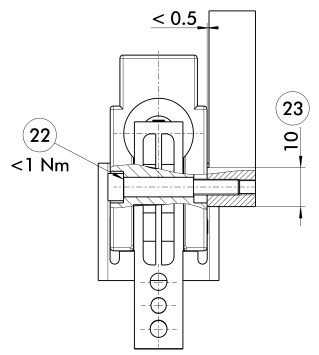


㉒ Tightening torque
㉓ Width of path

Recommended for achieving distortion-free gripper mounting

## Inductive proximity switches

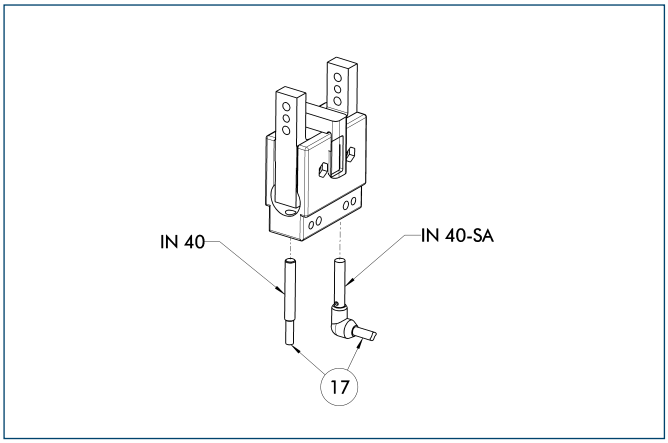


17 Cable outlet

End position monitoring for direct mounting

| Description | ID | Recommended product |
|---|---|---|
| Inductive proximity switches | | |
| IN 40-S-M8 | 0301474 | • |
| IN 40-S-M12 | 0301574 | |
| INK 40-S | 0301555 | |
| IN 40-O-M8 | 0301484 | • |
| IN 40-O-M12 | 0301584 | |
| INK 40-O | 0301556 | |
| Inductive proximity switch with lateral outlet | | |
| IN 40-S-M12-SA | 0301577 | |
| IN 40-S-M8-SA | 0301473 | • |
| INK 40-S-SA | 0301565 | |
| Connection cables | | |
| KA BG08-L 3P-0300-PNP | 0301622 | |
| KA BG08-L 3P-0500-PNP | 0301623 | |
| KA BG12-L 3P-0500-PNP | 30016369 | |
| KA BW08-L 3P-0300-PNP | 0301594 | |
| KA BW08-L 3P-0500-PNP | 0301502 | |
| KA BW12-L 3P-0300-PNP | 0301503 | |
| KA BW12-L 3P-0500-PNP | 0301507 | |
| Cable extensions | | |
| KV BG12-SG12 3P-0030-PNP | 0301999 | |
| KV BG12-SG12 3P-0060-PNP | 0301998 | |
| KV BW08-SG08 3P-0030-PNP | 0301495 | |
| KV BW08-SG08 3P-0100-PNP | 0301496 | |
| KV BW08-SG08 3P-0200-PNP | 0301497 | |
| KV BW12-SG12 3P-0030-PNP | 0301595 | |
| KV BW12-SG12 3P-0100-PNP | 0301596 | |
| KV BW12-SG12 3P-0200-PNP | 0301597 | |

ⓘ Two sensors, one NO and one NC contact, are required for each gripper, plus extension cables as an option.

ⓘ Please note the minimum permitted bending radii for the sensor cables, which are generally 35 mm.

You can find more detailed information and individual parts of the above-mentioned accessories in the “Accessories” catalog section.

# SWG

**Pneumatic • 2-Finger Angular Gripper • Gripper for small components**

**Sizes**
10 ... 50

**Weight**
0.0025 kg ... 0.213 kg

**Gripping moment**
0.01 Nm ... 2.8 Nm

**Angle per jaw**
15°

**Workpiece weight**
0.007 kg ... 0.46 kg

## Application example

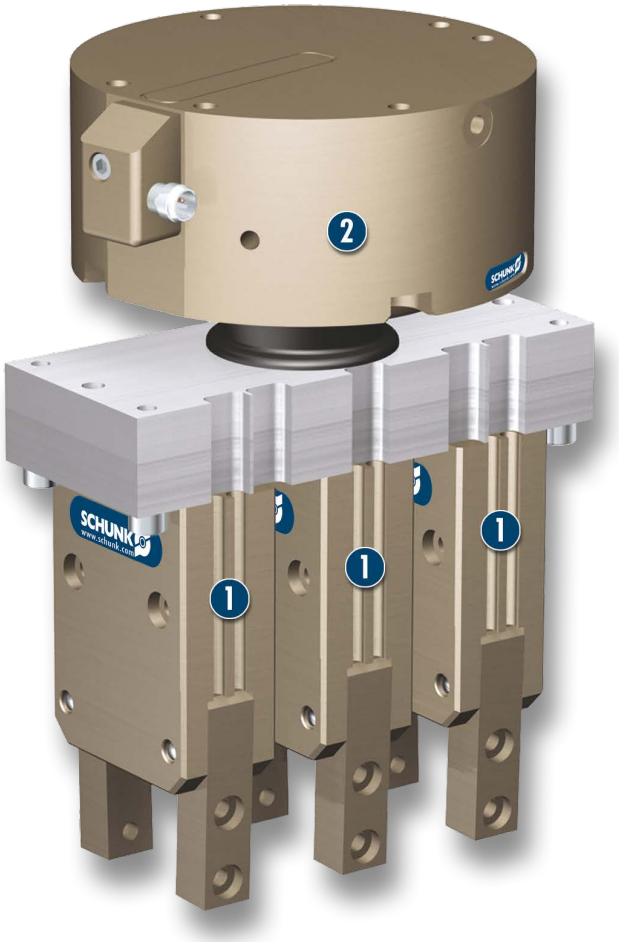


Triple transfer unit for packaging with small boxboards

1. 2-Finger Angular Gripper SWG
2. OPR collision and overload protection device

## Gripper for small components

narrow double-acting 2-finger angular gripper

## Field of application

For universal use in clean and slightly dirty environments. Suitable for applications requiring stacked, space-saving gripper assemblies.

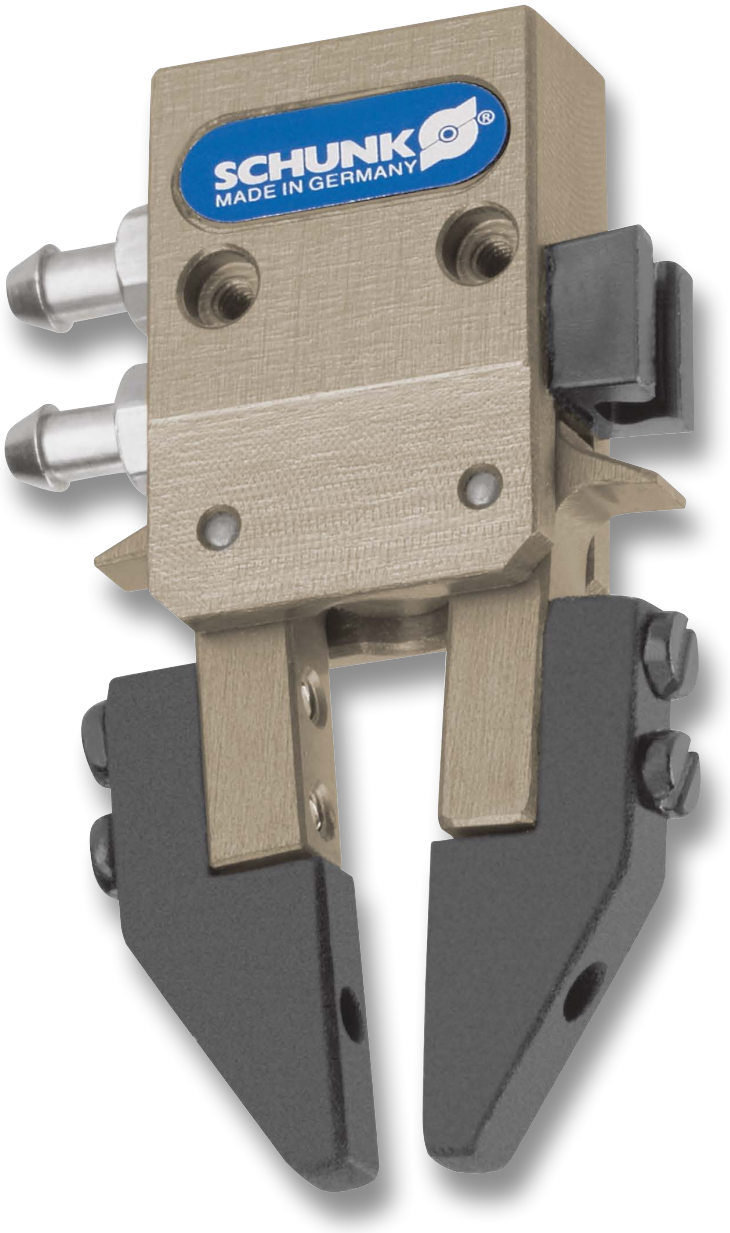


## Your advantages and benefits

**Slim design**
allowing the grippers to be stacked

**Spring-assisted gripping force maintenance**
holds the workpiece even in case of a loss of pressure

**Wedge-hook design**
for high power transmission and synchronized gripping

**Light, compact design**
for space-saving handling without interfering contours

**Monitoring via electronic magnetic switches**
a space-saving feature in a slot in the housing

## General note to the series

**Principle of function**
double-acting, guided kinematics

**Housing material**
Aluminum alloy, hard-anodized

**Base jaw material**
Aluminum alloy, hard-anodized

**Actuation**
pneumatic, with filtered compressed air (10 microns): dry, lubricated or non-lubricated
Pressure medium: Required quality class of compressed air according to DIN ISO 8573-1: 6 4 4

**Warranty**
24 months (details, general terms and conditions and operation manuals can be downloaded under www.schunk.com)

**Scope of delivery**
Swivel fittings, centering sleeves, assembly and operation manual with manufacturer's declaration

**Gripping force maintenance device**
always integrated, also possible via SDV-P pressure maintenance valve

## Sectional diagram

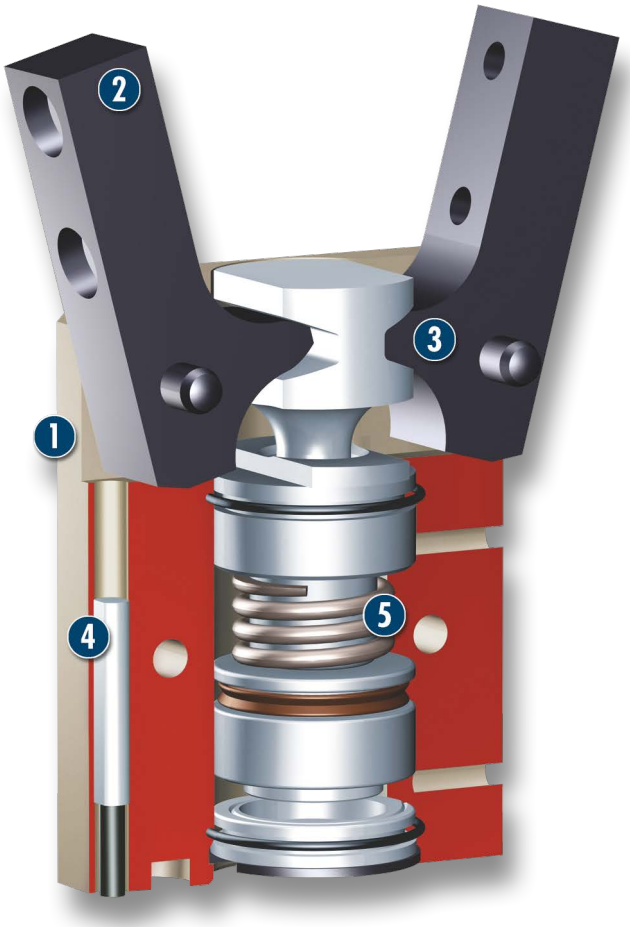


1 **Housing**
weight-optimized through application of hard-anodized, high-strength aluminum alloy

2 **Base jaws**
for the connection of workpiece-specific gripper fingers

3 **Kinematics**
precise gear for centric gripping

4 **Sensor system**
electronic magnetic switch, located space-saving in the groove of the housing

5 **Gripping force maintenance device**
mechanic gripping force maintenance for O.D. gripping

## Functional description

The piston is moved up and down by compressed air.
The kinematics transforms this vertical motion into a synchronous and rotatory gripping motion of the base jaws.

## Options and special information

The SWG angular gripper can be stacked directly to reduce interfering contours.

## Accessories

Accessories from SCHUNK – the suitable supplement for maximum functionality, reliability and performance of all automation modules.

### Centering sleeves



### Fittings



### Pressure maintenance valve



### Magnetic Switches



### Plastic inserts





### Sensor cables



### Gripper pads

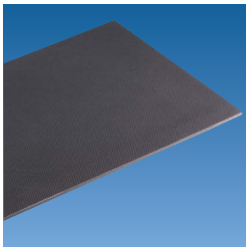

### Sensor Distributor

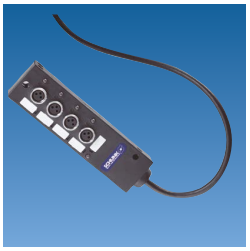

ⓘ For the exact size of the required accessories, availability of this size and the designation and ID, please refer to the additional views at the end of the size in question. You will find more detailed information on our accessory range in the “Accessories” catalog section.

## General note to the series

### Gripping moment

Gripping moment is the arithmetic total of gripping moments for each claw jaw.

### Finger length

The finger length is measured from the upper edge of the gripper housing in direction to the main axis. If the max. admissible finger length is exceeded, the speed of jaw motions have to be reduced and/or the opening angle has to be diminished, as it is done with heavy fingers. The service life of the gripper can shorten.

### Repeat accuracy

is defined as the spread of the limit position after 100 consecutive strokes.

### Workpiece weight

The recommended workpiece weight is calculated for a force-type connection with a coefficient of friction of 0.1 and a safety factor of 2 against slippage of the workpiece on acceleration due to gravity g. Considerably heavier workpiece weights are permitted with form-fit gripping.

### Closing and opening times

Closing and opening times are purely the times that the base jaws or fingers are in motion. Valve switching times, hose filling times or PLC reaction times are not included in the above times and must be taken into consideration when determining cycle times.

# SWG 10

**Pneumatic • 2-Finger Angular Gripper • Gripper for small components**




## Gripping force, O.D. gripping

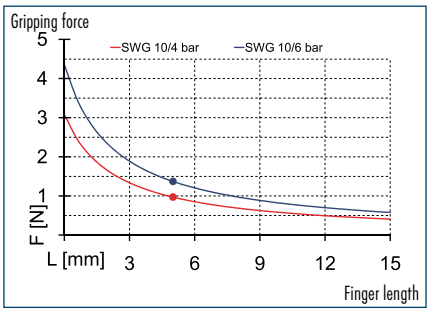


## Finger load

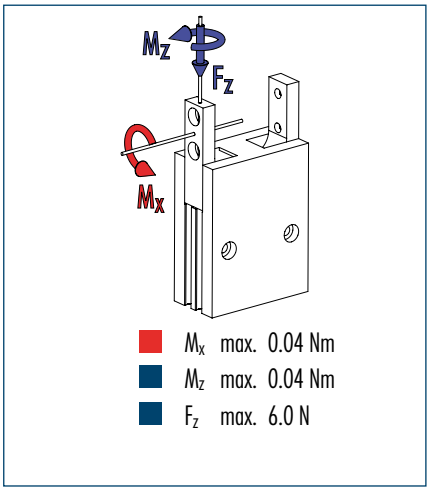


ⓘ The indicated moments and forces are statical values, apply for each base jaw and should not appear simultaneously. If the maximum admissible finger weight is exceeded, throttling is necessary in order to ensure a smooth jaw motion without jerks or bounces. The life-time may reduce.

## Technical data

| Description | | SWG 10 |
|---|---|---|
| **ID** | | **0305116** |
| Opening angle per jaw | [°] | 15 |
| Closed angle per jaw up to | [°] | 7 |
| Closing moment | [Nm] | 0.01 |
| Spring-actuated closing moment | [Nm] | 0.0027 |
| Weight | [kg] | 0.0025 |
| Recommended workpiece weight | [kg] | 0.007 |
| Air consumption per double stroke | [cm³] | 0.055 |
| Min./max. operating pressure | [bar] | 4/6.5 |
| Nominal operating pressure | [bar] | 6 |
| Closing/opening time | [s] | 0.015/0.02 |
| Max. permitted finger length | [mm] | 10 |
| Max. permitted weight per finger | [kg] | 0.003 |
| IP class | | 30 |
| Min./max. ambient temperature | [°C] | -10/90 |
| Repeat accuracy | [mm] | 0.05 |

## Main view

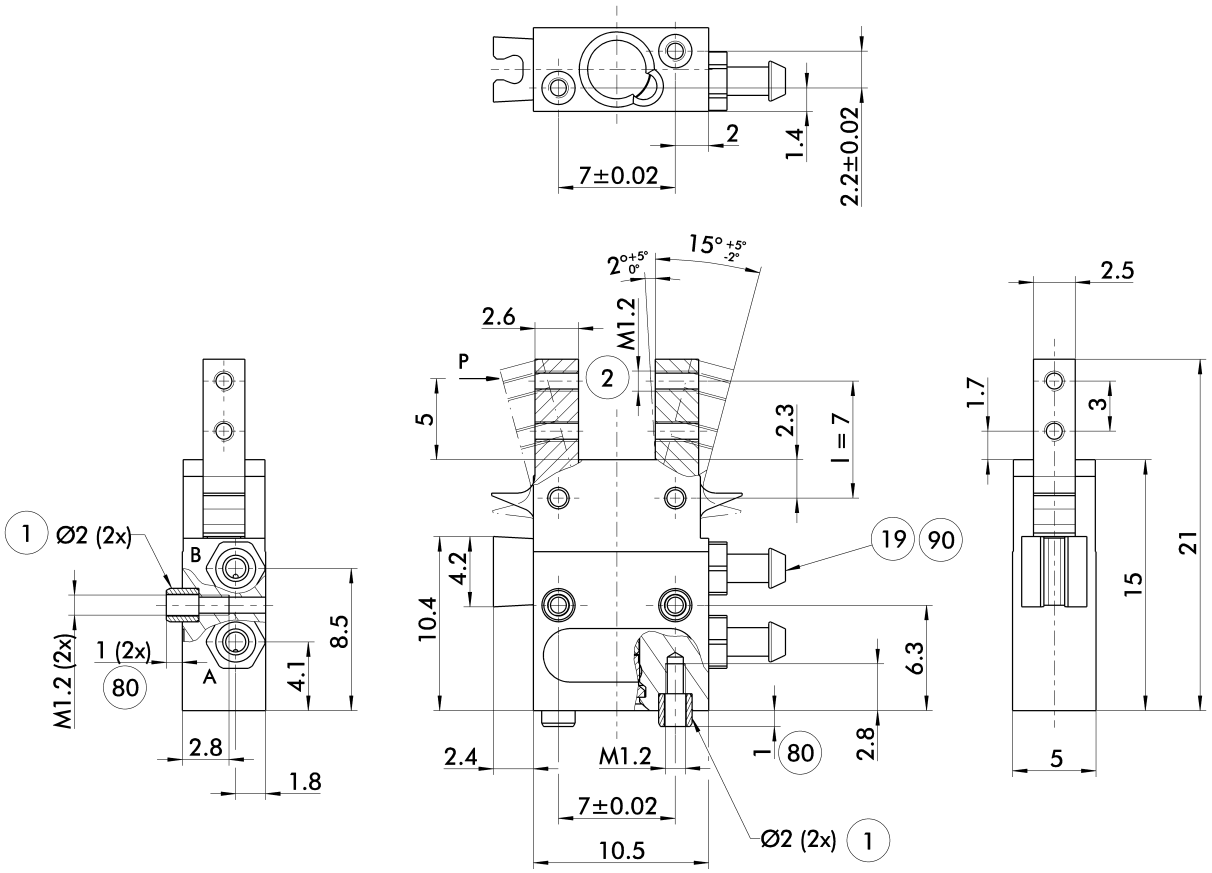


The drawing shows the gripper in the basic version with closed jaws, the dimensions do not include the options described below.

ⓘ The SDV-P pressure maintenance valve can be used as a gripping force maintenance device (see "Accessories" catalog section).

A, a Main/direct connection, gripper opening
B, b Main/direct connection, gripper closing
① Gripper connection
② Finger connection
⑲ Air connection
⑧⓪ Depth of the centering sleeve hole in the matching part
⑨⓪ Polyurethane hoses with an I.D. of 1.6 mm. Source: AC Aircontrols GmbH, Kempen, Germany

## Optical Proximity Switch

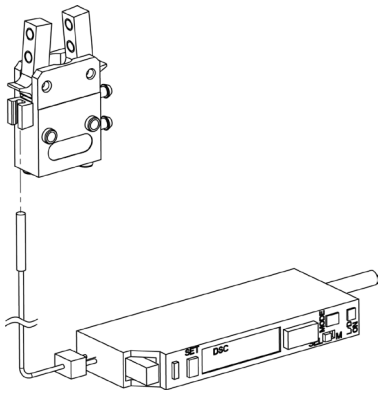

| Description | ID |
|---|---|
| Optical Proximity Switch | |
| ONS 01 | 0301390 |
| Optical wave guide | |
| ONS 01-LWL | 0301391 |

ⓘ Per each gripper a sensor (ONS 01) as well as an optical wave guide (ONS 01-LWL) are required. Assembly of the optical sensors at the gripper is done with the supplied plastic clip.

# SWG 12

**Pneumatic • 2-Finger Angular Gripper • Gripper for small components**

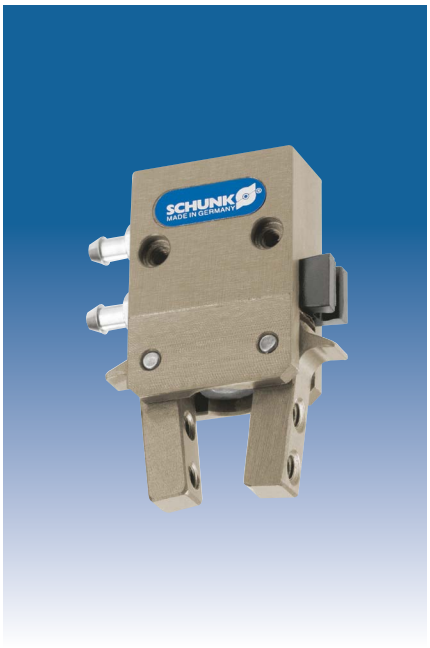


## Gripping force, O.D. gripping

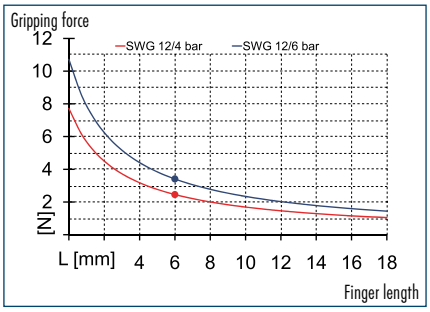


## Finger load

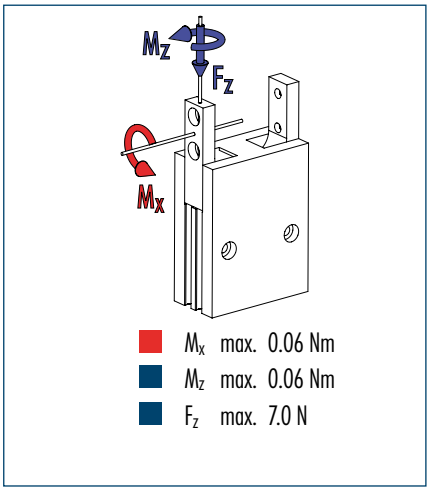


ⓘ The indicated moments and forces are statical values, apply for each base jaw and should not appear simultaneously. If the maximum admissible finger weight is exceeded, throttling is necessary in order to ensure a smooth jaw motion without jerks or bounces. The life-time may reduce.

## Technical data

| Description | | SWG 12 |
|---|---|---|
| **ID** | | **0305115** |
| Opening angle per jaw | [°] | 15 |
| Closed angle per jaw up to | [°] | 7 |
| Closing moment | [Nm] | 0.03 |
| Spring-actuated closing moment | [Nm] | 0.009 |
| Weight | [kg] | 0.0048 |
| Recommended workpiece weight | [kg] | 0.017 |
| Air consumption per double stroke | [cm³] | 0.07 |
| Min./max. operating pressure | [bar] | 4/6.5 |
| Nominal operating pressure | [bar] | 6 |
| Closing/opening time | [s] | 0.015/0.02 |
| Max. permitted finger length | [mm] | 12 |
| Max. permitted weight per finger | [kg] | 0.006 |
| IP class | | 30 |
| Min./max. ambient temperature | [°C] | -10/90 |
| Repeat accuracy | [mm] | 0.05 |

## Main view

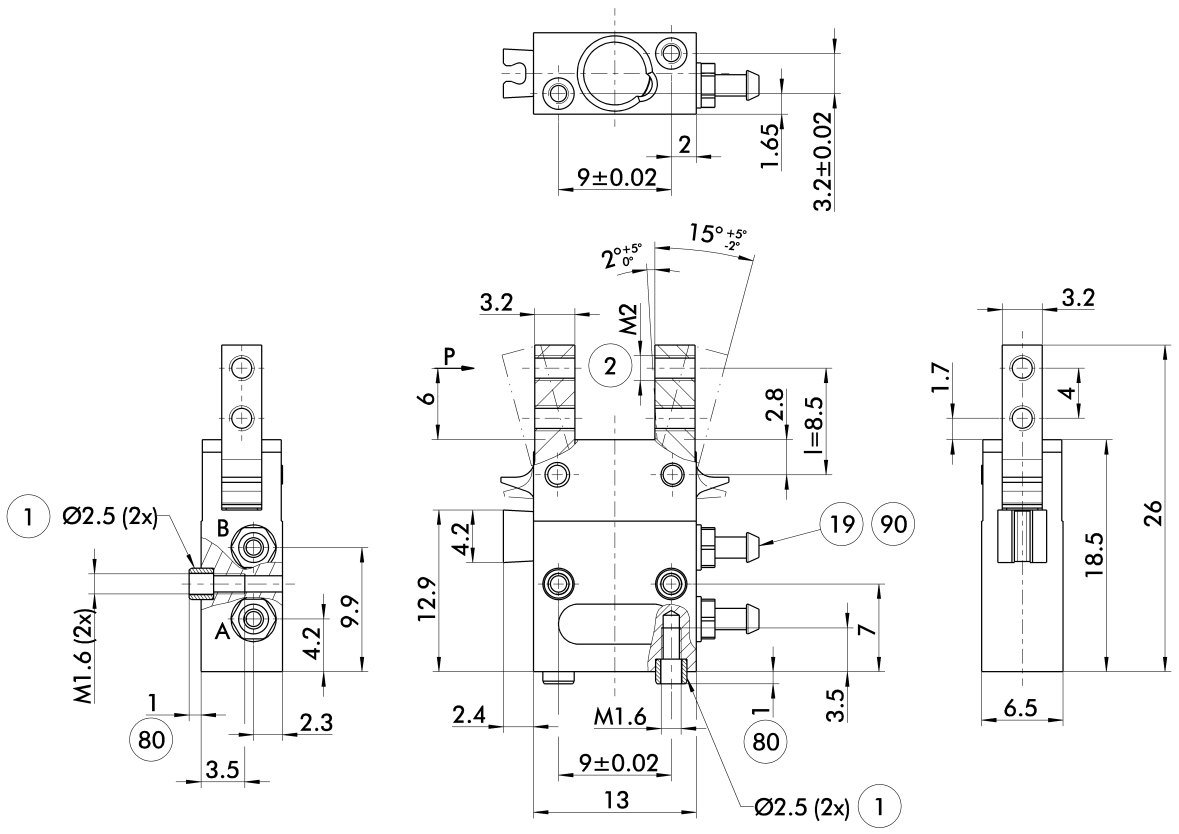


The drawing shows the gripper in the basic version with closed jaws, the dimensions do not include the options described below.

ⓘ The SDV-P pressure maintenance valve can be used as a gripping force maintenance device (see "Accessories" catalog section).

A, a Main/direct connection, gripper opening
B, b Main/direct connection, gripper closing
① Gripper connection
② Finger connection
⑲ Air connection
㉚ Depth of the centering sleeve hole in the matching part
㉚ Polyurethane hoses with an I.D. of 1.6 mm. Source: AC Aircontrols GmbH, Kempen, Germany

## Optical Proximity Switch

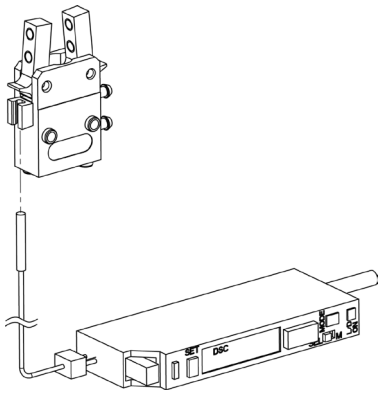

| Description | ID |
|---|---|
| Optical Proximity Switch | |
| ONS 01 | **0301390** |
| Optical wave guide | |
| ONS 01-LWL | **0301391** |

ⓘ Per each gripper a sensor (ONS 01) as well as an optical wave guide (ONS 01-LWL) are required. Assembly of the optical sensors at the gripper is done with the supplied plastic clip.

# SWG 16

**Pneumatic • 2-Finger Angular Gripper • Gripper for small components**



## Gripping force, O.D. gripping

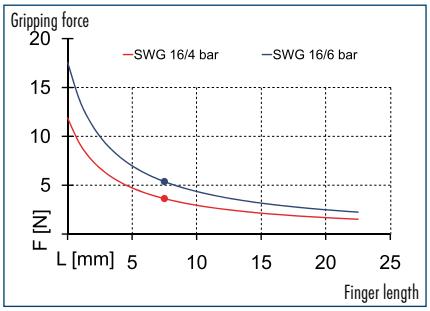


## Finger load

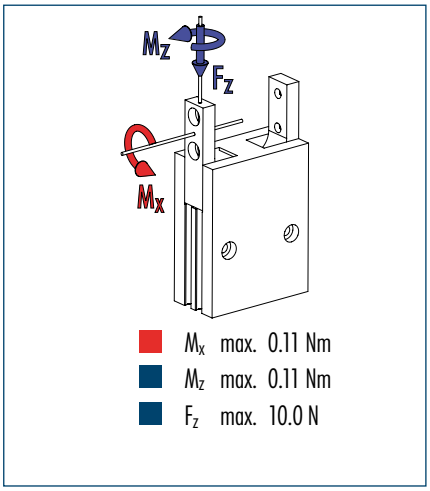


The indicated moments and forces are statical values, apply for each base jaw and should not appear simultaneously. If the maximum admissible finger weight is exceeded, throttling is necessary in order to ensure a smooth jaw motion without jerks or bounces. The life-time may reduce.

## Technical data

| Description | | SWG 16 |
|---|---|---|
| ID | | 0305104 |
| Opening angle per jaw | [°] | 15 |
| Closed angle per jaw up to | [°] | 7 |
| Closing moment | [Nm] | 0.058 |
| Spring-actuated closing moment | [Nm] | 0.017 |
| Weight | [kg] | 0.011 |
| Recommended workpiece weight | [kg] | 0.027 |
| Air consumption per double stroke | [cm³] | 0.12 |
| Min./max. operating pressure | [bar] | 4/6.5 |
| Nominal operating pressure | [bar] | 6 |
| Closing/opening time | [s] | 0.015/0.02 |
| Max. permitted finger length | [mm] | 15 |
| Max. permitted weight per finger | [kg] | 0.012 |
| IP class | | 30 |
| Min./max. ambient temperature | [°C] | -10/90 |
| Repeat accuracy | [mm] | 0.05 |

## Main view

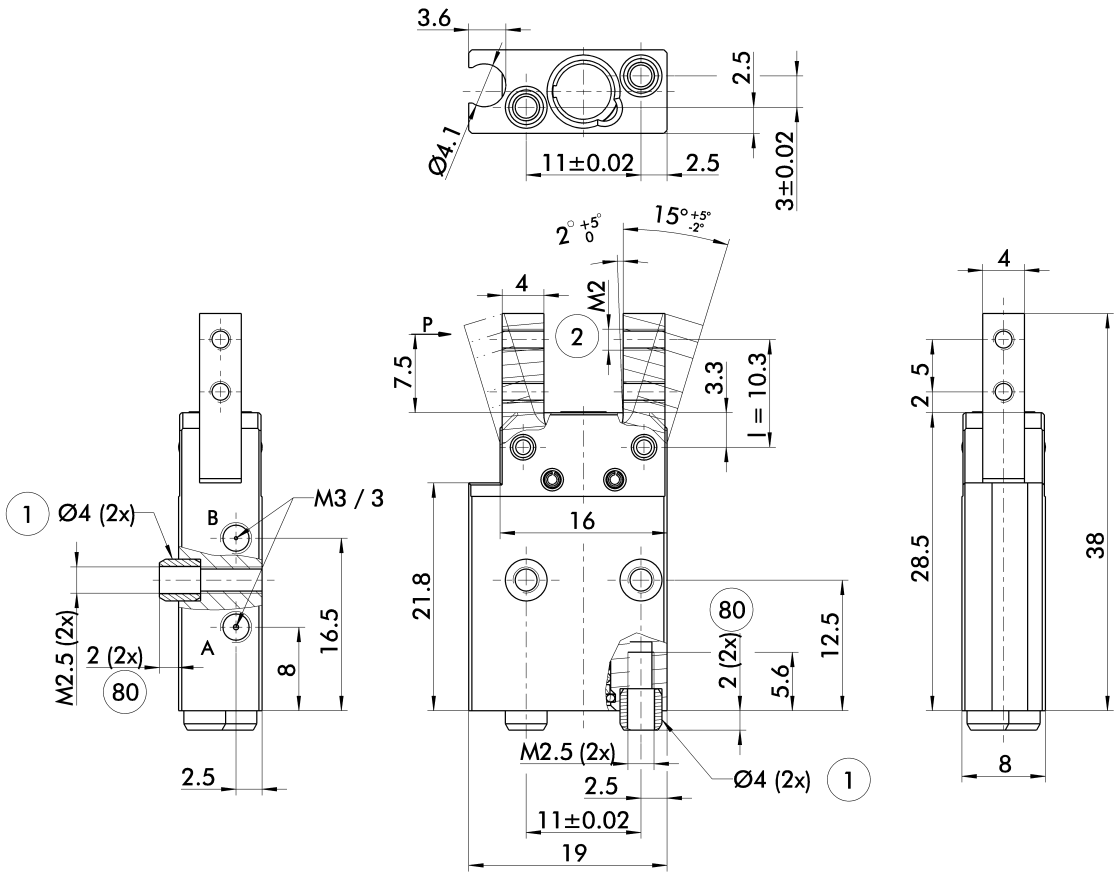


The drawing shows the gripper in the basic version with closed jaws, the dimensions do not include the options described below.

ⓘ The SDV-P pressure maintenance valve can be used as a gripping force maintenance device (see "Accessories" catalog section).

A, a Main/direct connection, gripper opening
B, b Main/direct connection, gripper closing
① Gripper connection
② Finger connection
⑧⓪ Depth of the centering sleeve hole in the matching part

## Stacked arrangement

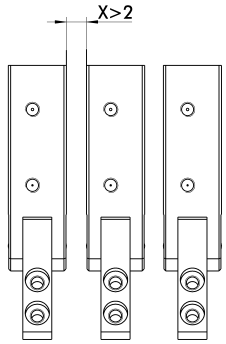


CAUTION: Monitoring is carried out by magnetic switches, and in case of side-by-side assembly of several units, a minimum distance of X mm between the units must be maintained.

## Modular Assembly Automation

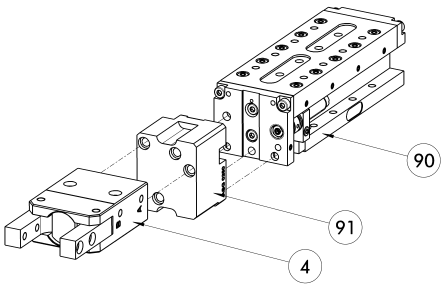


④ Gripper
⑨⓪ CLM
⑨① ASG

This gripper can be combined with the standard linear modules LM, KLM, CLM and ELM of the GEMOTEC modular system. For more information see our main catalog "Modular Assembly Automation".

## Programmable magnetic switch

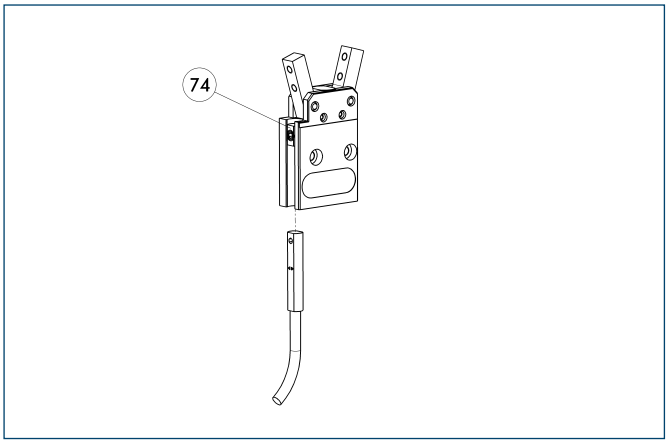


74 Stop for MMS-P

Position monitoring with two programmable positions per sensor. The end position monitoring is mounted in the C-slot.

| Description | ID | Recommended product |
|---|---|---|
| Programmable magnetic switch | | |
| MMS-P 22-S-M8-PNP | **0301370** | • |
| MMSK-P 22-S-PNP | **0301371** | |
| Connection cables | | |
| KA BG08-L 4P-0500 | **0307767** | |
| KA BG08-L 4P-1000 | **0307768** | |
| KA BW08-L 4P-0500 | **0307765** | |
| KA BW08-L 4P-1000 | **0307766** | |
| Sensor Distributor | | |
| V2-M8-4P-2XM8-3P | **0301380** | |

ⓘ Please note the minimum permitted bending radii for the sensor cables, which are generally 35 mm.

ⓘ Per gripper one sensor (closer/NO) is required, optionally a cable extension.

You can find more detailed information and individual parts of the above-mentioned accessories in the “Accessories” catalog section.

# SWG 20

**Pneumatic • 2-Finger Angular Gripper • Gripper for small components**



## Gripping force, O.D. gripping

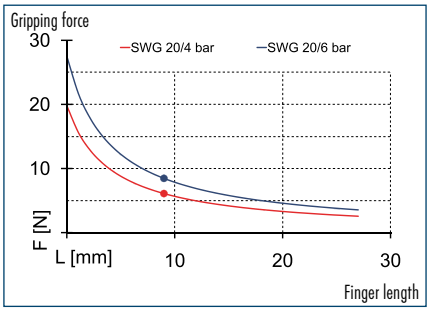


## Finger load

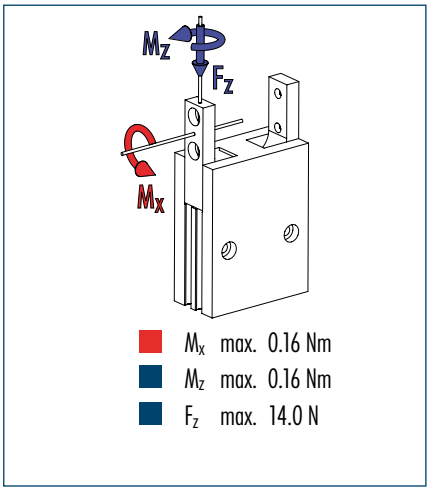


ⓘ The indicated moments and forces are statical values, apply for each base jaw and should not appear simultaneously. If the maximum admissible finger weight is exceeded, throttling is necessary in order to ensure a smooth jaw motion without jerks or bounces. The life-time may reduce.

## Technical data

| Description | | SWG 20 |
|---|---|---|
| ID | | 0305105 |
| Opening angle per jaw | [°] | 15 |
| Closed angle per jaw up to | [°] | 7 |
| Closing moment | [Nm] | 0.11 |
| Spring-actuated closing moment | [Nm] | 0.033 |
| Weight | [kg] | 0.019 |
| Recommended workpiece weight | [kg] | 0.043 |
| Air consumption per double stroke | [cm³] | 0.25 |
| Min./max. operating pressure | [bar] | 4/6.5 |
| Nominal operating pressure | [bar] | 6 |
| Closing/opening time | [s] | 0.015/0.02 |
| Max. permitted finger length | [mm] | 18 |
| Max. permitted weight per finger | [kg] | 0.02 |
| IP class | | 30 |
| Min./max. ambient temperature | [°C] | -10/90 |
| Repeat accuracy | [mm] | 0.05 |

## Main view

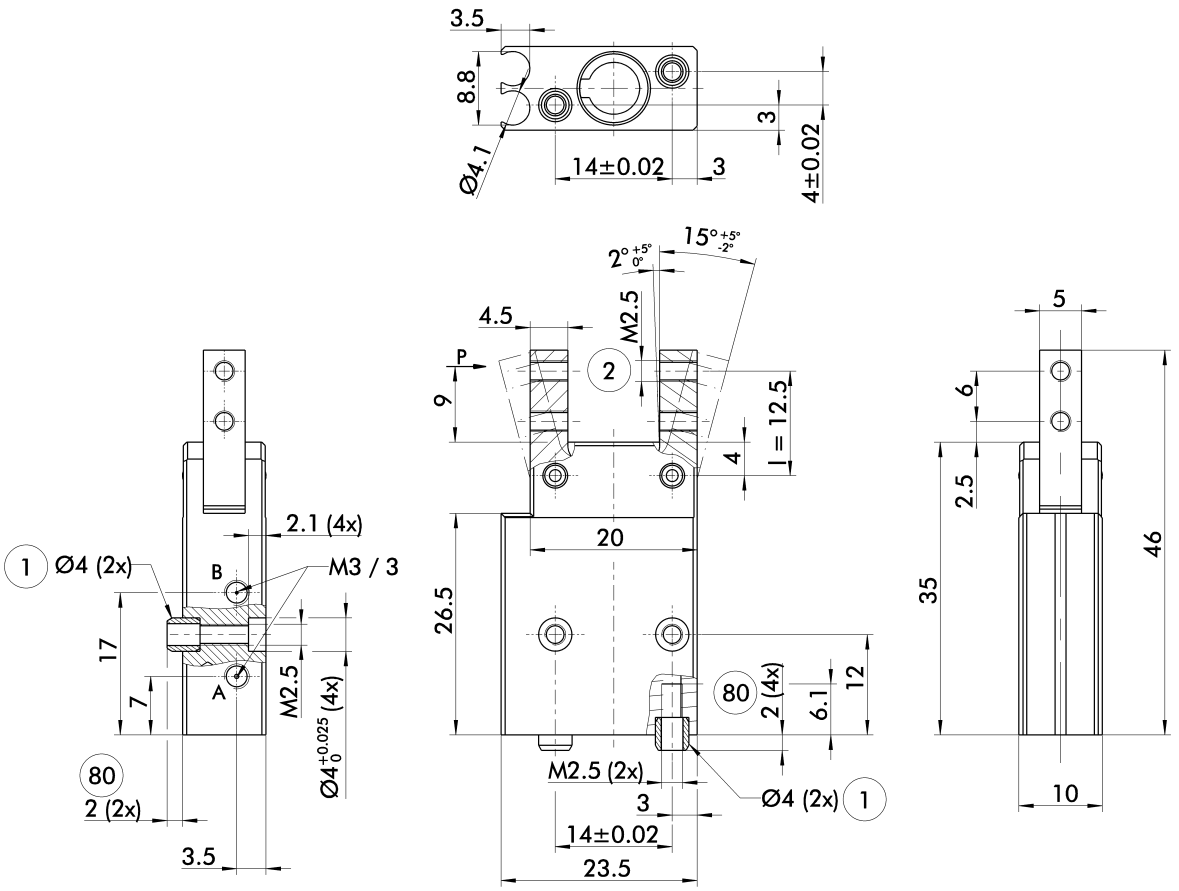


The drawing shows the gripper in the basic version with closed jaws, the dimensions do not include the options described below.

ⓘ The SDV-P pressure maintenance valve can be used as a gripping force maintenance device (see "Accessories" catalog section).

A, a Main/direct connection, gripper opening
B, b Main/direct connection, gripper closing
① Gripper connection
② Finger connection
80 Depth of the centering sleeve hole in the matching part

## Stacked arrangement

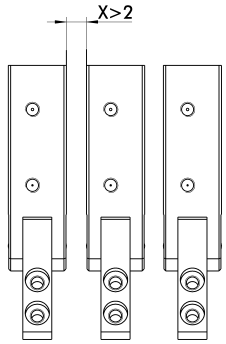


CAUTION: Monitoring is carried out by magnetic switches, and in case of side-by-side assembly of several units, a minimum distance of X mm between the units must be maintained.

## Modular Assembly Automation

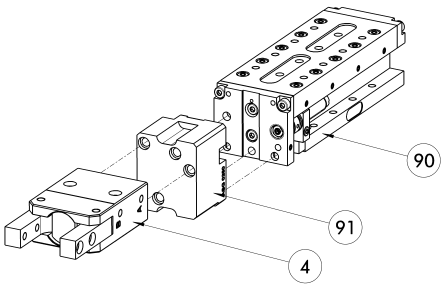


④ Gripper
⑨⓪ CLM
⑨① ASG

This gripper can be combined with the standard linear modules LM, KLM, CLM and ELM of the GEMOTEC modular system. For more information see our main catalog "Modular Assembly Automation".

## Programmable magnetic switch

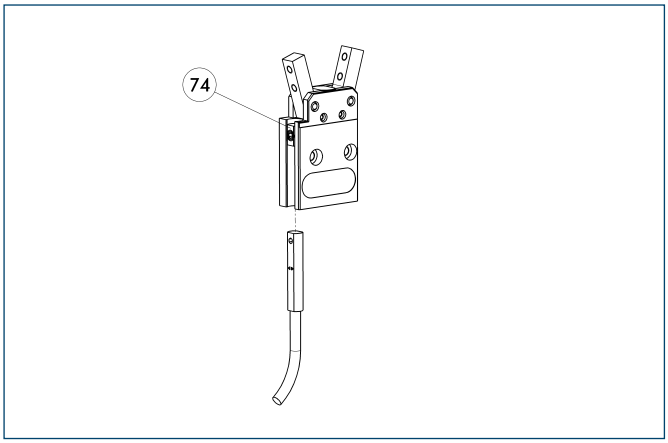


74 Stop for MMS-P

Position monitoring with two programmable positions per sensor. The end position monitoring is mounted in the C-slot.

| Description | ID | Recommended product |
|---|---|---|
| Programmable magnetic switch | | |
| MMS-P 22-S-M8-PNP | **0301370** | • |
| MMSK-P 22-S-PNP | **0301371** | |
| Connection cables | | |
| KA BG08-L 4P-0500 | **0307767** | |
| KA BG08-L 4P-1000 | **0307768** | |
| KA BW08-L 4P-0500 | **0307765** | |
| KA BW08-L 4P-1000 | **0307766** | |
| Sensor Distributor | | |
| V2-M8-4P-2XM8-3P | **0301380** | |

ⓘ Please note the minimum permitted bending radii for the sensor cables, which are generally 35 mm.

ⓘ Per gripper one sensor (closer/NO) is required, optionally a cable extension.

You can find more detailed information and individual parts of the above-mentioned accessories in the “Accessories” catalog section.

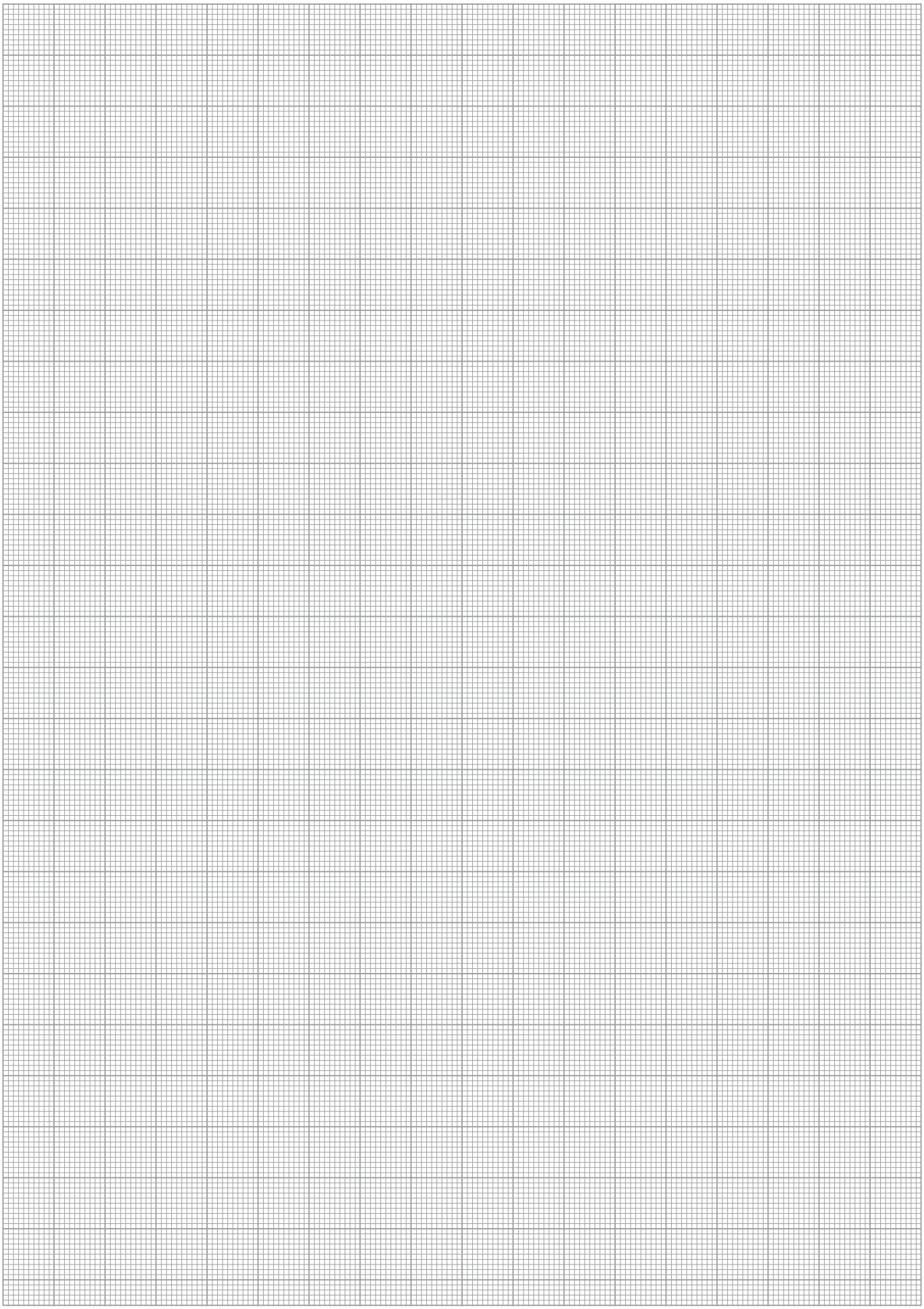

# SWG 25

**Pneumatic • 2-Finger Angular Gripper • Gripper for small components**



## Gripping force, O.D. gripping

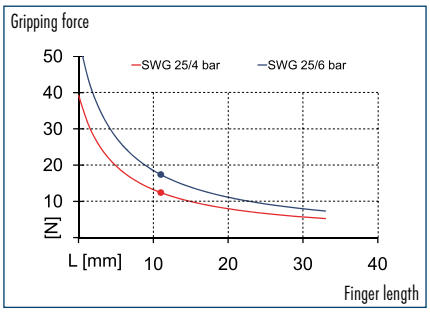


## Finger load

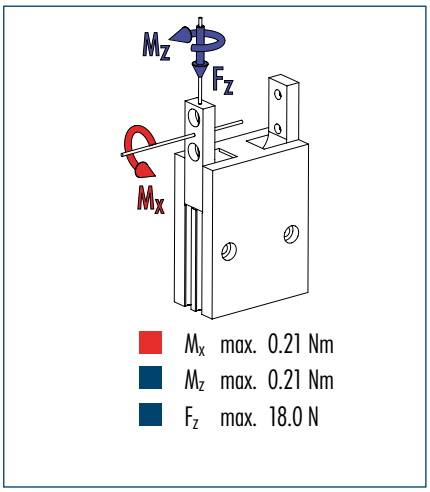


ⓘ The indicated moments and forces are statical values, apply for each base jaw and should not appear simultaneously. If the maximum admissible finger weight is exceeded, throttling is necessary in order to ensure a smooth jaw motion without jerks or bounces. The life-time may reduce.

## Technical data

| Description | | SWG 25 |
|---|---|---|
| **ID** | | **0305106** |
| Opening angle per jaw | [°] | 15 |
| Closed angle per jaw up to | [°] | 7 |
| Closing moment | [Nm] | 0.28 |
| Spring-actuated closing moment | [Nm] | 0.08 |
| Weight | [kg] | 0.035 |
| Recommended workpiece weight | [kg] | 0.09 |
| Air consumption per double stroke | [cm³] | 0.4 |
| Min./max. operating pressure | [bar] | 4/6.5 |
| Nominal operating pressure | [bar] | 6 |
| Closing/opening time | [s] | 0.015/0.02 |
| Max. permitted finger length | [mm] | 22 |
| Max. permitted weight per finger | [kg] | 0.028 |
| IP class | | 30 |
| Min./max. ambient temperature | [°C] | -10/90 |
| Repeat accuracy | [mm] | 0.05 |

## Main view

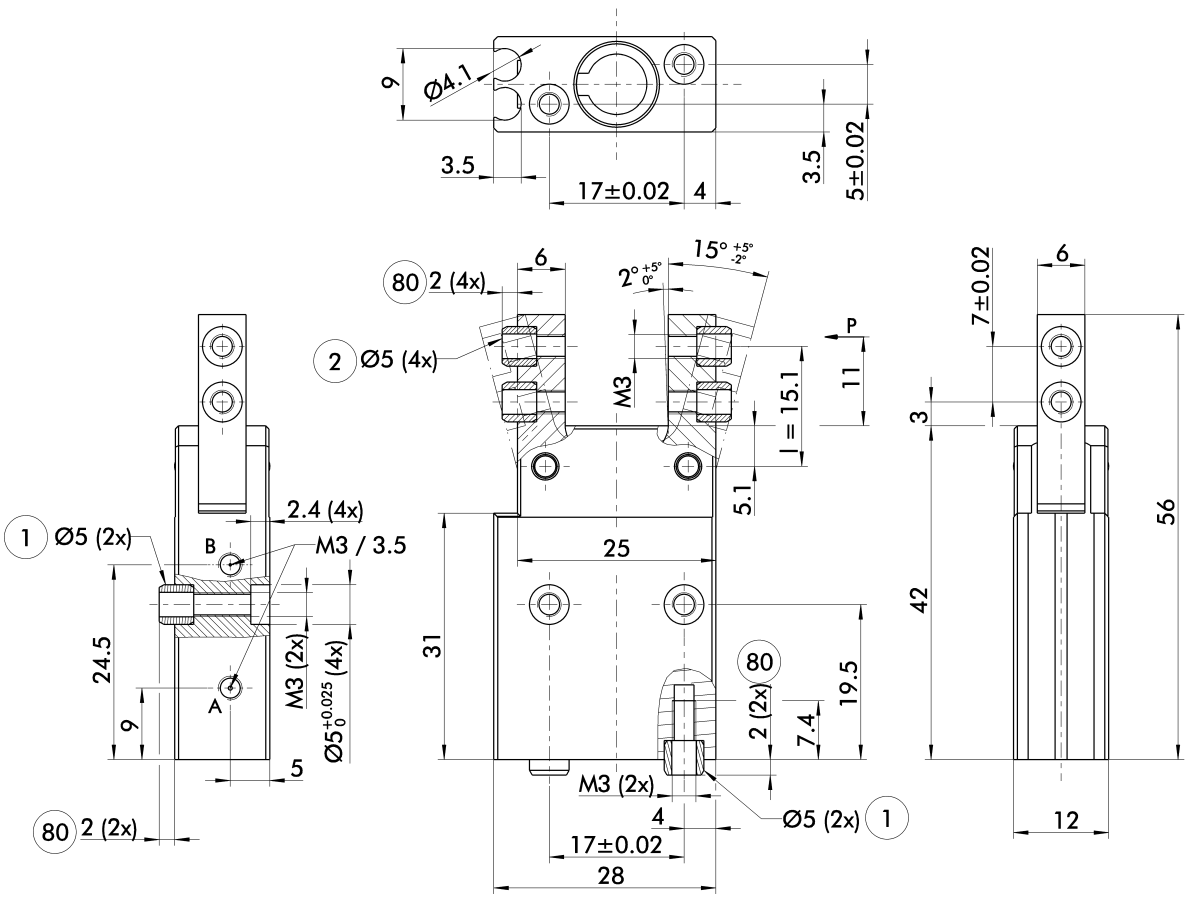


The drawing shows the gripper in the basic version with closed jaws, the dimensions do not include the options described below.

ⓘ The SDV-P pressure maintenance valve can be used as a gripping force maintenance device (see "Accessories" catalog section).

A, a Main/direct connection, gripper opening
B, b Main/direct connection, gripper closing
① Gripper connection
② Finger connection
⑧⓪ Depth of the centering sleeve hole in the matching part

## Stacked arrangement

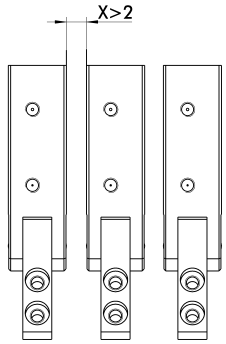


CAUTION: Monitoring is carried out by magnetic switches, and in case of side-by-side assembly of several units, a minimum distance of X mm between the units must be maintained.

## Modular Assembly Automation

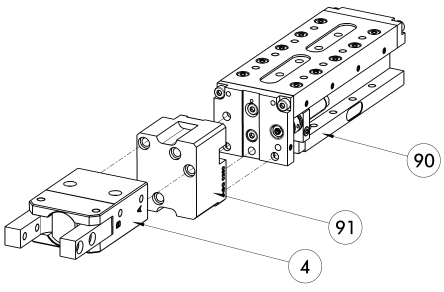


④ Gripper
⑨⓪ CLM
⑨① ASG

This gripper can be combined with the standard linear modules LM, KLM, CLM and ELM of the GEMOTEC modular system. For more information see our main catalog "Modular Assembly Automation".

## Programmable magnetic switch

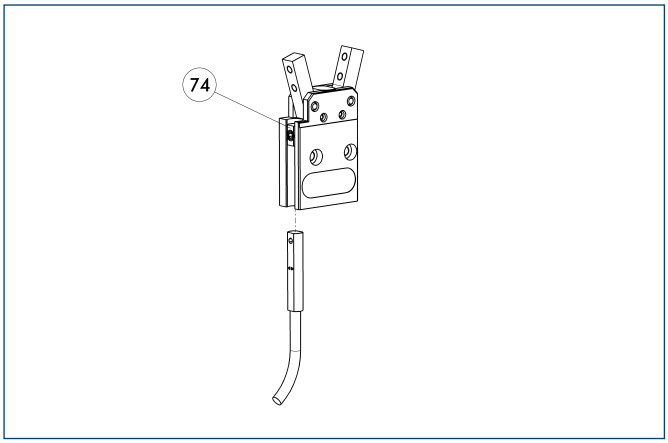


74 Stop for MMS-P

Position monitoring with two programmable positions per sensor. The end position monitoring is mounted in the C-slot.

| Description | ID | Recommended product |
|---|---|---|
| Programmable magnetic switch | | |
| MMS-P 22-S-M8-PNP | **0301370** | • |
| MMSK-P 22-S-PNP | **0301371** | |
| Connection cables | | |
| KA BG08-L 4P-0500 | **0307767** | |
| KA BG08-L 4P-1000 | **0307768** | |
| KA BW08-L 4P-0500 | **0307765** | |
| KA BW08-L 4P-1000 | **0307766** | |
| Sensor Distributor | | |
| V2-M8-4P-2XM8-3P | **0301380** | |

ⓘ Please note the minimum permitted bending radii for the sensor cables, which are generally 35 mm.

ⓘ Per gripper one sensor (closer/NO) is required, optionally a cable extension.

You can find more detailed information and individual parts of the above-mentioned accessories in the “Accessories” catalog section.

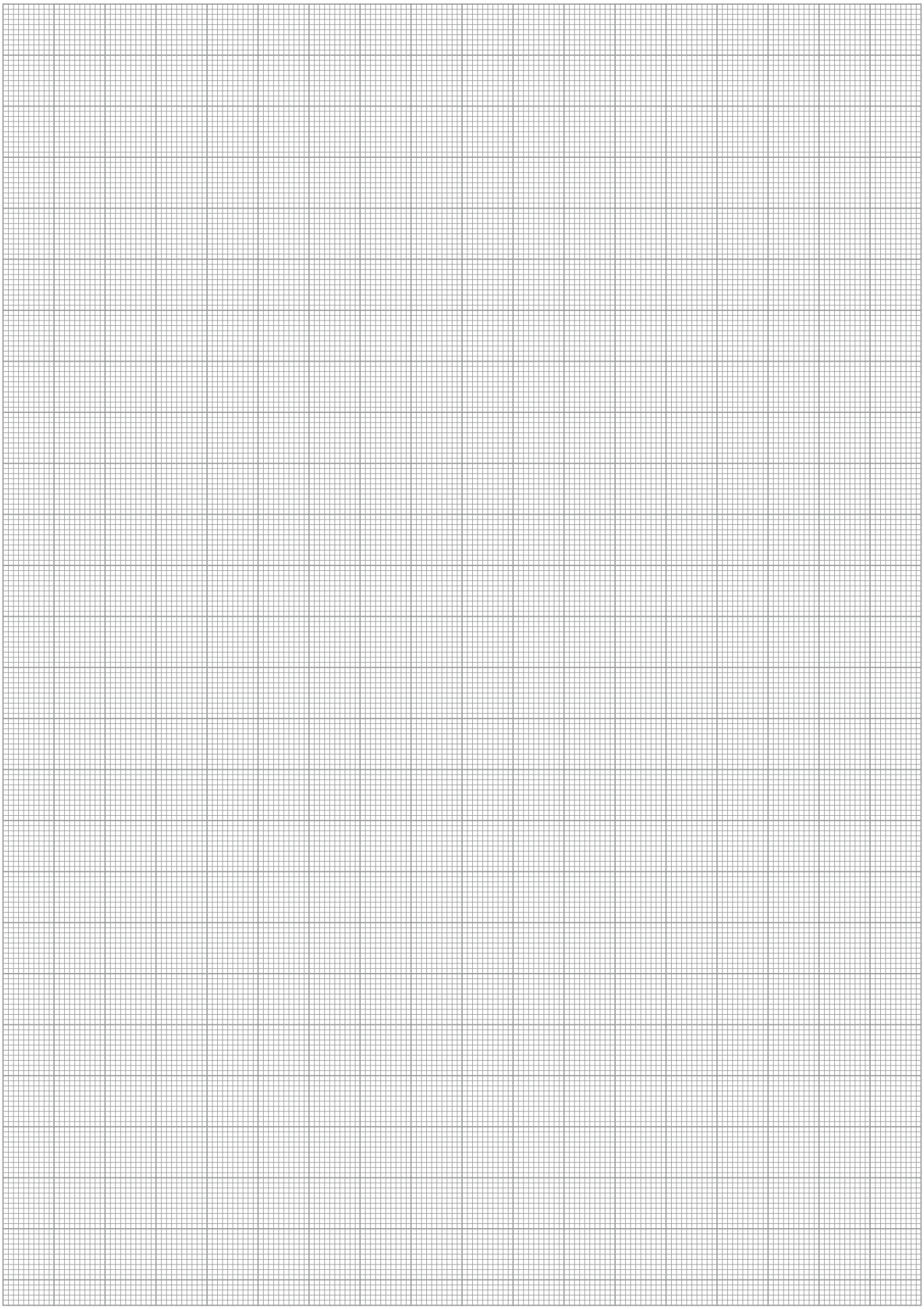

# SWG 32

**Pneumatic • 2-Finger Angular Gripper • Gripper for small components**



## Gripping force, O.D. gripping

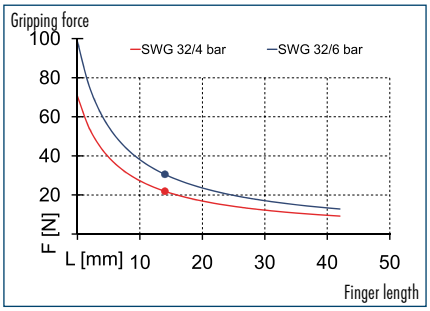


## Finger load

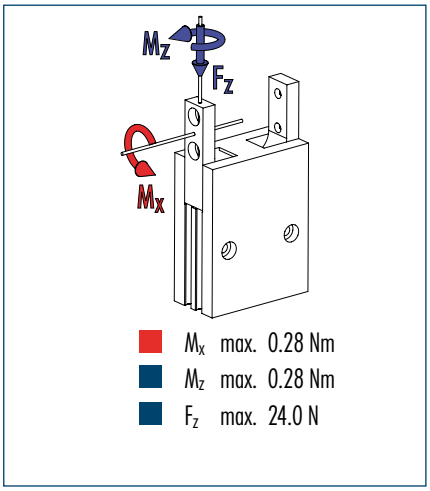


ⓘ The indicated moments and forces are statical values, apply for each base jaw and should not appear simultaneously. If the maximum admissible finger weight is exceeded, throttling is necessary in order to ensure a smooth jaw motion without jerks or bounces. The life-time may reduce.

## Technical data

| Description | | SWG 32 |
|---|---|---|
| ID | | 0305107 |
| Opening angle per jaw | [°] | 15 |
| Closed angle per jaw up to | [°] | 7 |
| Closing moment | [Nm] | 0.62 |
| Spring-actuated closing moment | [Nm] | 0.18 |
| Weight | [kg] | 0.069 |
| Recommended workpiece weight | [kg] | 0.156 |
| Air consumption per double stroke | [cm³] | 0.85 |
| Min./max. operating pressure | [bar] | 4/6.5 |
| Nominal operating pressure | [bar] | 6 |
| Closing/opening time | [s] | 0.02/0.025 |
| Max. permitted finger length | [mm] | 28 |
| Max. permitted weight per finger | [kg] | 0.036 |
| IP class | | 30 |
| Min./max. ambient temperature | [°C] | -10/90 |
| Repeat accuracy | [mm] | 0.05 |

## Main view

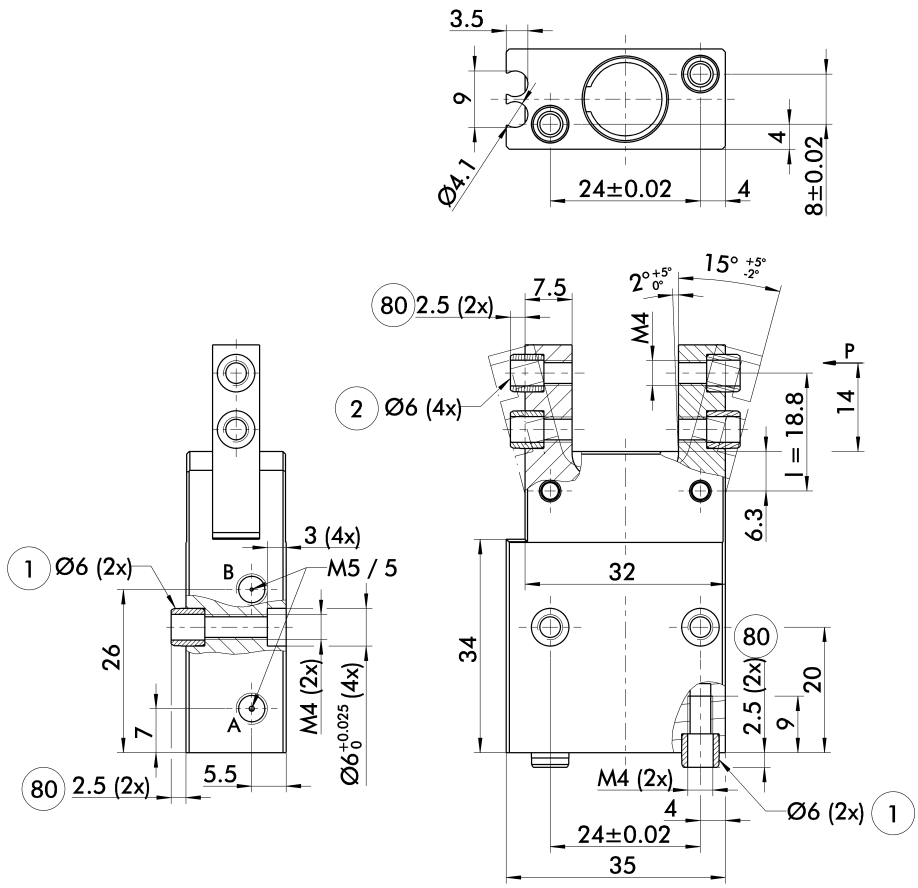


The drawing shows the gripper in the basic version with closed jaws, the dimensions do not include the options described below.

ⓘ The SDV-P pressure maintenance valve can be used as a gripping force maintenance device (see "Accessories" catalog section).

A, a Main/direct connection, gripper opening
B, b Main/direct connection, gripper closing
① Gripper connection
② Finger connection
⑧⓪ Depth of the centering sleeve hole in the matching part

## Stacked arrangement

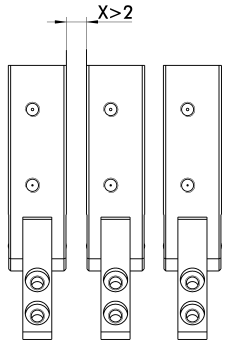


CAUTION: Monitoring is carried out by magnetic switches, and in case of side-by-side assembly of several units, a minimum distance of X mm between the units must be maintained.

## Modular Assembly Automation

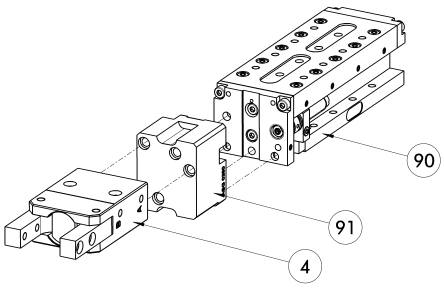


④ Gripper
⑨⓪ CLM
⑨① ASG

This gripper can be combined with the standard linear modules LM, KLM, CLM and ELM of the GEMOTEC modular system. For more information see our main catalog "Modular Assembly Automation".

## Programmable magnetic switch

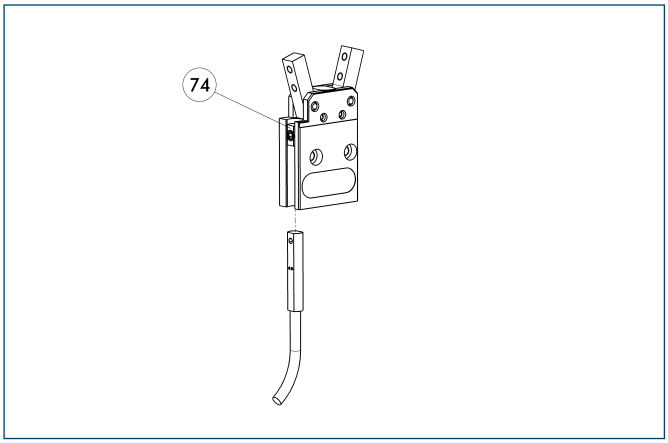


74 Stop for MMS-P

Position monitoring with two programmable positions per sensor. The end position monitoring is mounted in the C-slot.

| Description | ID | Recommended product |
|---|---|---|
| Programmable magnetic switch | | |
| MMS-P 22-S-M8-PNP | **0301370** | • |
| MMSK-P 22-S-PNP | **0301371** | |
| Connection cables | | |
| KA BG08-L 4P-0500 | **0307767** | |
| KA BG08-L 4P-1000 | **0307768** | |
| KA BW08-L 4P-0500 | **0307765** | |
| KA BW08-L 4P-1000 | **0307766** | |
| Sensor Distributor | | |
| V2-M8-4P-2XM8-3P | **0301380** | |

ⓘ Please note the minimum permitted bending radii for the sensor cables, which are generally 35 mm.

ⓘ Per gripper one sensor (closer/NO) is required, optionally a cable extension.

You can find more detailed information and individual parts of the above-mentioned accessories in the “Accessories” catalog section.

# SWG 40

**Pneumatic • 2-Finger Angular Gripper • Gripper for small components**



## Gripping force, O.D. gripping

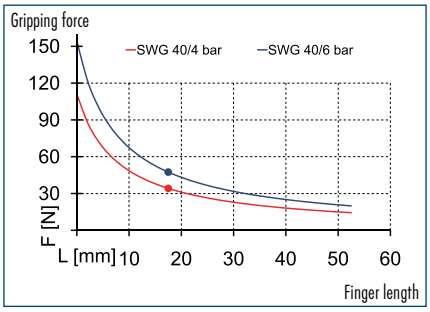


## Finger load

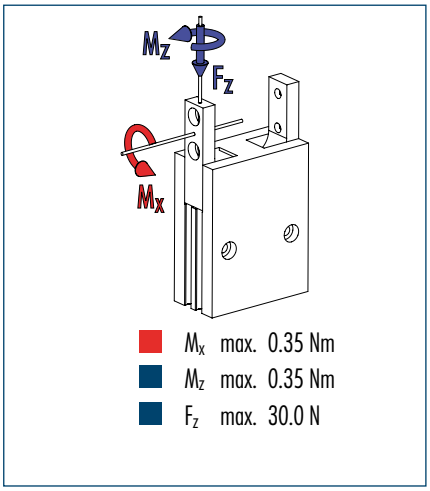


ⓘ The indicated moments and forces are statical values, apply for each base jaw and should not appear simultaneously. If the maximum admissible finger weight is exceeded, throttling is necessary in order to ensure a smooth jaw motion without jerks or bounces. The life-time may reduce.

## Technical data

| Description | | SWG 40 |
|---|---|---|
| ID | | 0305108 |
| Opening angle per jaw | [°] | 15 |
| Closed angle per jaw up to | [°] | 7 |
| Closing moment | [Nm] | 1.2 |
| Spring-actuated closing moment | [Nm] | 0.36 |
| Weight | [kg] | 0.106 |
| Recommended workpiece weight | [kg] | 0.24 |
| Air consumption per double stroke | [cm³] | 1.6 |
| Min./max. operating pressure | [bar] | 4/6.5 |
| Nominal operating pressure | [bar] | 6 |
| Closing/opening time | [s] | 0.025/0.03 |
| Max. permitted finger length | [mm] | 35 |
| Max. permitted weight per finger | [kg] | 0.05 |
| IP class | | 30 |
| Min./max. ambient temperature | [°C] | -10/90 |
| Repeat accuracy | [mm] | 0.05 |

## Main view

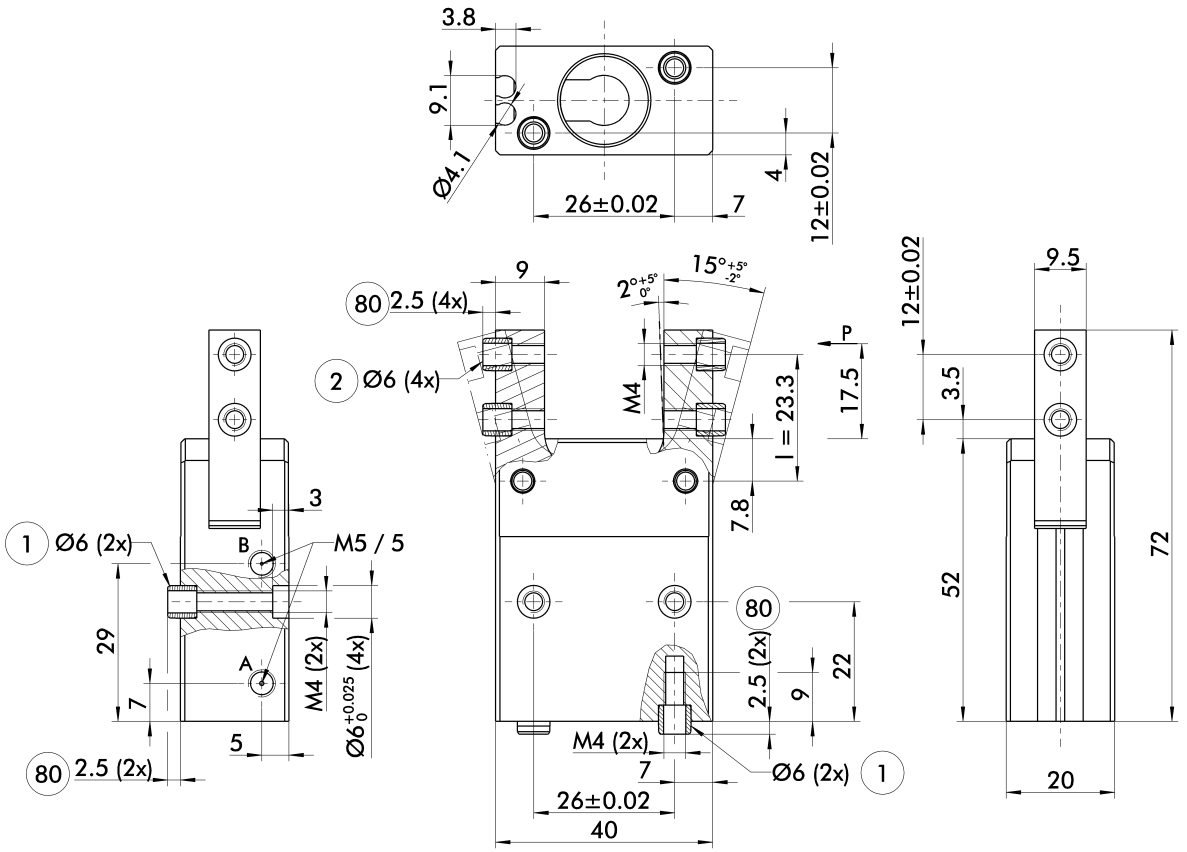


The drawing shows the gripper in the basic version with closed jaws, the dimensions do not include the options described below.

ⓘ The SDV-P pressure maintenance valve can be used as a gripping force maintenance device (see "Accessories" catalog section).

A, a Main/direct connection, gripper opening
B, b Main/direct connection, gripper closing
(1) Gripper connection
(2) Finger connection
(80) Depth of the centering sleeve hole in the matching part

## Stacked arrangement

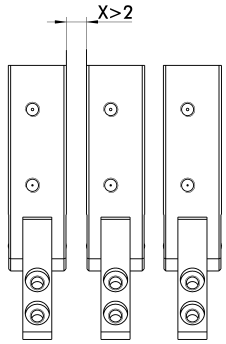


CAUTION: Monitoring is carried out by magnetic switches, and in case of side-by-side assembly of several units, a minimum distance of X mm between the units must be maintained.

## Modular Assembly Automation

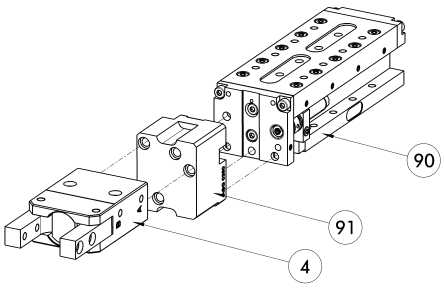


(4) Gripper
(90) CLM
(91) ASG

This gripper can be combined with the standard linear modules LM, KLM, CLM and ELM of the GEMOTEC modular system. For more information see our main catalog "Modular Assembly Automation".

## Programmable magnetic switch

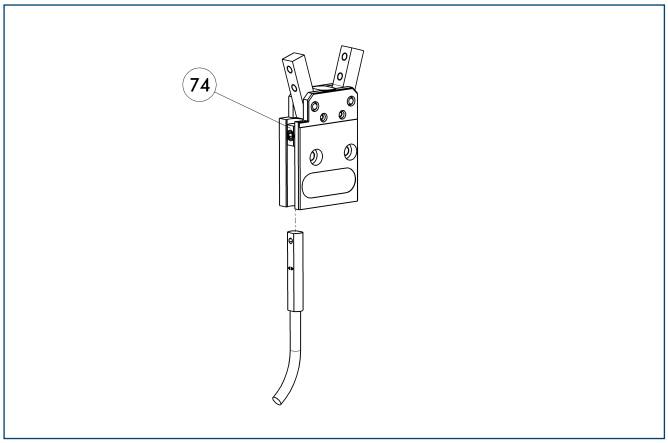


74 Stop for MMS-P

Position monitoring with two programmable positions per sensor. The end position monitoring is mounted in the C-slot.

| Description | ID | Recommended product |
|---|---|---|
| Programmable magnetic switch | | |
| MMS-P 22-S-M8-PNP | **0301370** | • |
| MMSK-P 22-S-PNP | **0301371** | |
| Connection cables | | |
| KA BG08-L 4P-0500 | **0307767** | |
| KA BG08-L 4P-1000 | **0307768** | |
| KA BW08-L 4P-0500 | **0307765** | |
| KA BW08-L 4P-1000 | **0307766** | |
| Sensor Distributor | | |
| V2-M8-4P-2XM8-3P | **0301380** | |

ⓘ Please note the minimum permitted bending radii for the sensor cables, which are generally 35 mm.

ⓘ Per gripper one sensor (closer/NO) is required, optionally a cable extension.

You can find more detailed information and individual parts of the above-mentioned accessories in the “Accessories” catalog section.

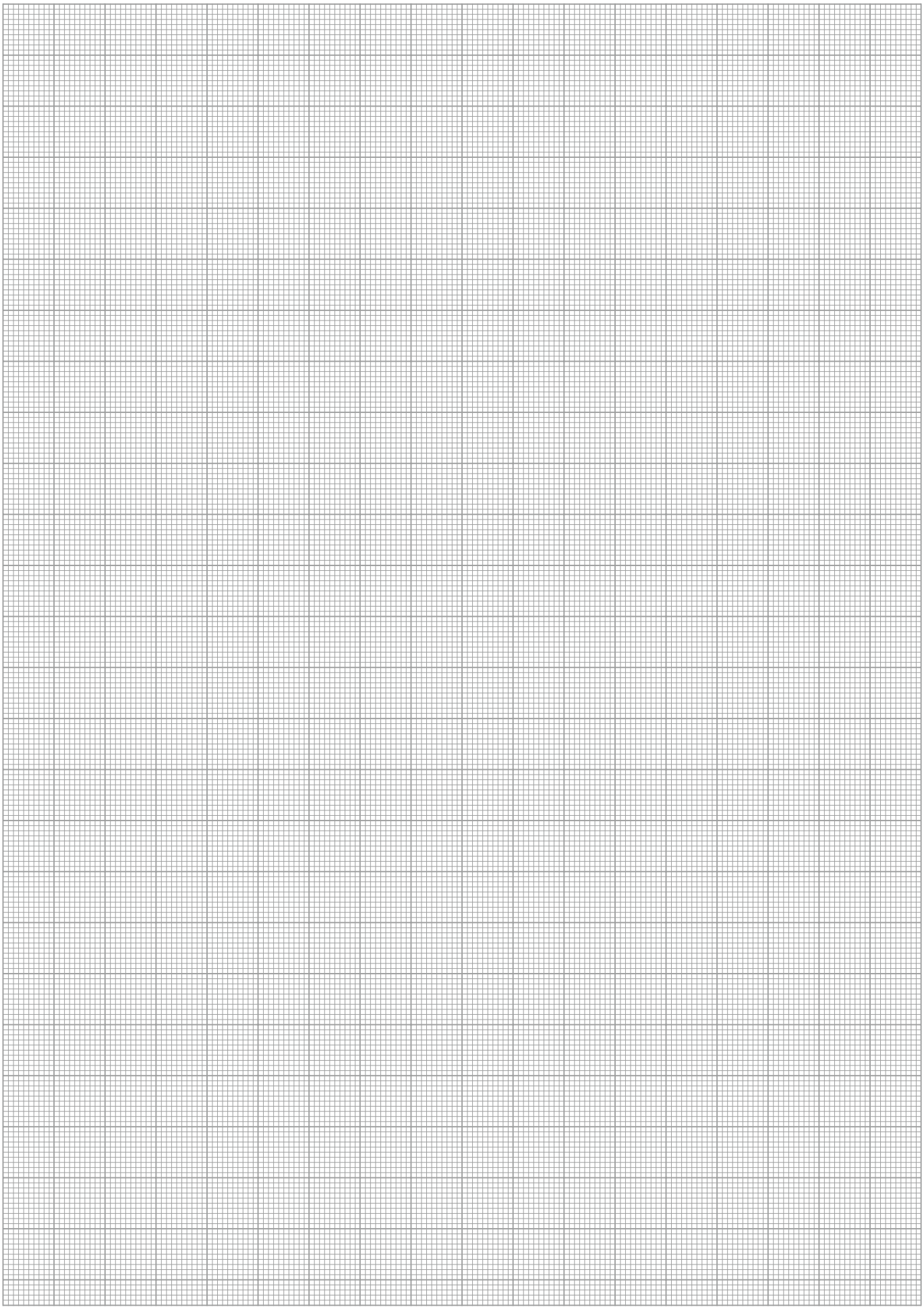

# SWG 50

**Pneumatic • 2-Finger Angular Gripper • Gripper for small components**



## Gripping force, O.D. gripping

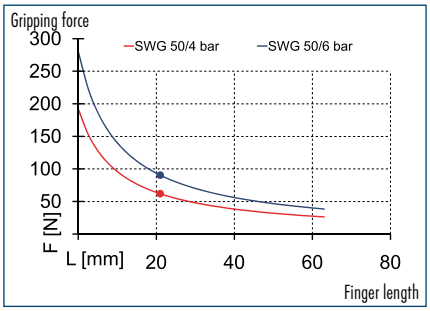


## Finger load

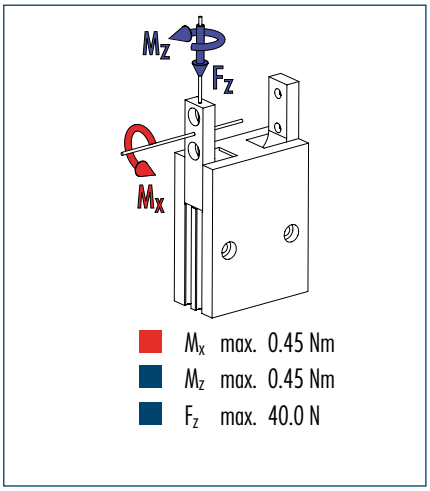


ⓘ The indicated moments and forces are statical values, apply for each base jaw and should not appear simultaneously. If the maximum admissible finger weight is exceeded, throttling is necessary in order to ensure a smooth jaw motion without jerks or bounces. The life-time may reduce.

## Technical data

| Description | | SWG 50 |
|---|---|---|
| ID | | 0305109 |
| Opening angle per jaw | [°] | 15 |
| Closed angle per jaw up to | [°] | 7 |
| Closing moment | [Nm] | 2.8 |
| Spring-actuated closing moment | [Nm] | 0.6 |
| Weight | [kg] | 0.213 |
| Recommended workpiece weight | [kg] | 0.46 |
| Air consumption per double stroke | [cm³] | 3.8 |
| Min./max. operating pressure | [bar] | 4/6.5 |
| Nominal operating pressure | [bar] | 6 |
| Closing/opening time | [s] | 0.03/0.06 |
| Max. permitted finger length | [mm] | 42 |
| Max. permitted weight per finger | [kg] | 0.08 |
| IP class | | 30 |
| Min./max. ambient temperature | [°C] | -10/90 |
| Repeat accuracy | [mm] | 0.05 |

## Main view

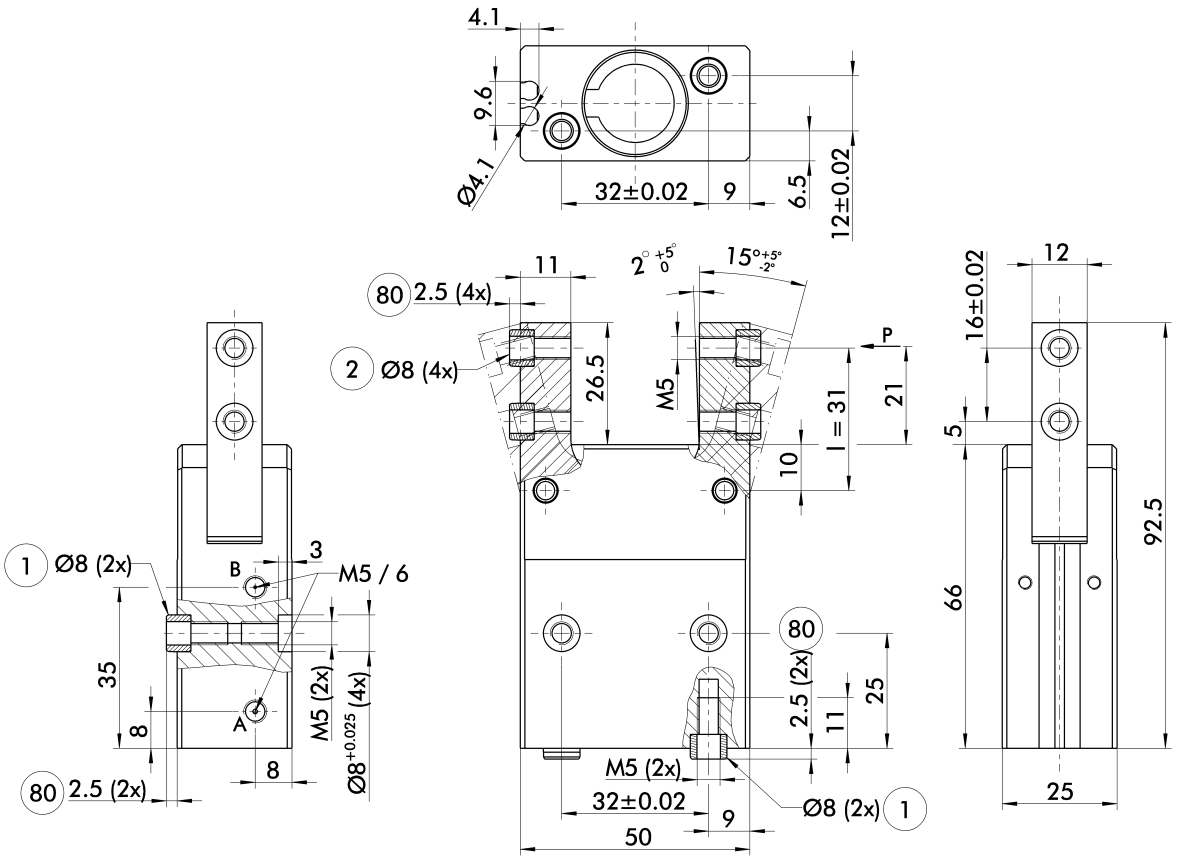


The drawing shows the gripper in the basic version with closed jaws, the dimensions do not include the options described below.

ⓘ The SDV-P pressure maintenance valve can be used as a gripping force maintenance device (see "Accessories" catalog section).

A, a Main/direct connection, gripper opening
B, b Main/direct connection, gripper closing
① Gripper connection
② Finger connection
⑧⓪ Depth of the centering sleeve hole in the matching part

## Stacked arrangement

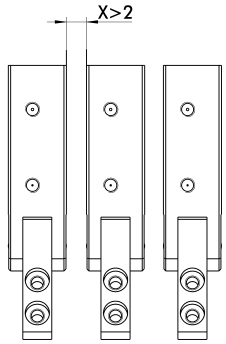


CAUTION: Monitoring is carried out by magnetic switches, and in case of side-by-side assembly of several units, a minimum distance of X mm between the units must be maintained.

## Modular Assembly Automation

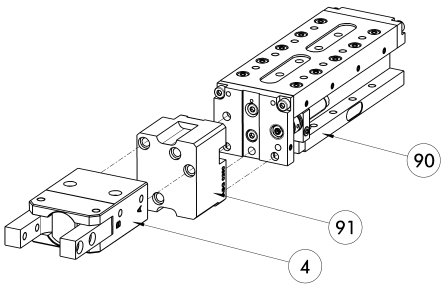


④ Gripper
⑨⓪ CLM
⑨① ASG

This gripper can be combined with the standard linear modules LM, KLM, CLM and ELM of the GEMOTEC modular system. For more information see our main catalog "Modular Assembly Automation".

## Programmable magnetic switch

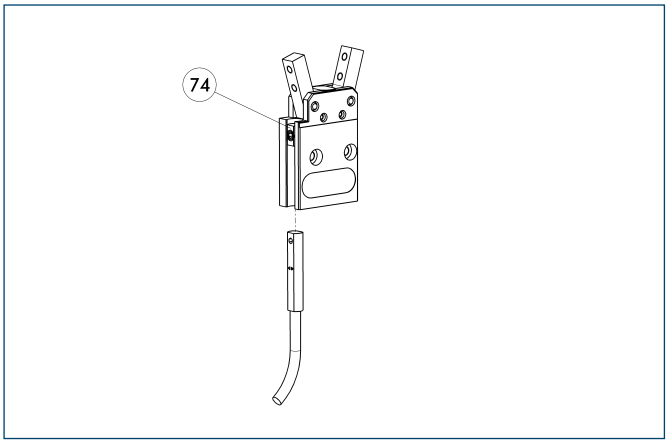


74 Stop for MMS-P

Position monitoring with two programmable positions per sensor. The end position monitoring is mounted in the C-slot.

| Description | ID | Recommended product |
|---|---|---|
| Programmable magnetic switch | | |
| MMS-P 22-S-M8-PNP | **0301370** | • |
| MMSK-P 22-S-PNP | **0301371** | |
| Connection cables | | |
| KA BG08-L 4P-0500 | **0307767** | |
| KA BG08-L 4P-1000 | **0307768** | |
| KA BW08-L 4P-0500 | **0307765** | |
| KA BW08-L 4P-1000 | **0307766** | |
| Sensor Distributor | | |
| V2-M8-4P-2XM8-3P | **0301380** | |

ⓘ Please note the minimum permitted bending radii for the sensor cables, which are generally 35 mm.

ⓘ Per gripper one sensor (closer/NO) is required, optionally a cable extension.

You can find more detailed information and individual parts of the above-mentioned accessories in the “Accessories” catalog section.

# LGW

**Pneumatic • 2-Finger Angular Gripper • Universal Gripper**

**Sizes**
10 ... 40

**Weight**
0.042 kg ... 0.845 kg

**Gripping moment**
0.22 Nm ... 11.2 Nm

**Angle per jaw**
20°

**Workpiece weight**
0.06 kg ... 1 kg

## Application example

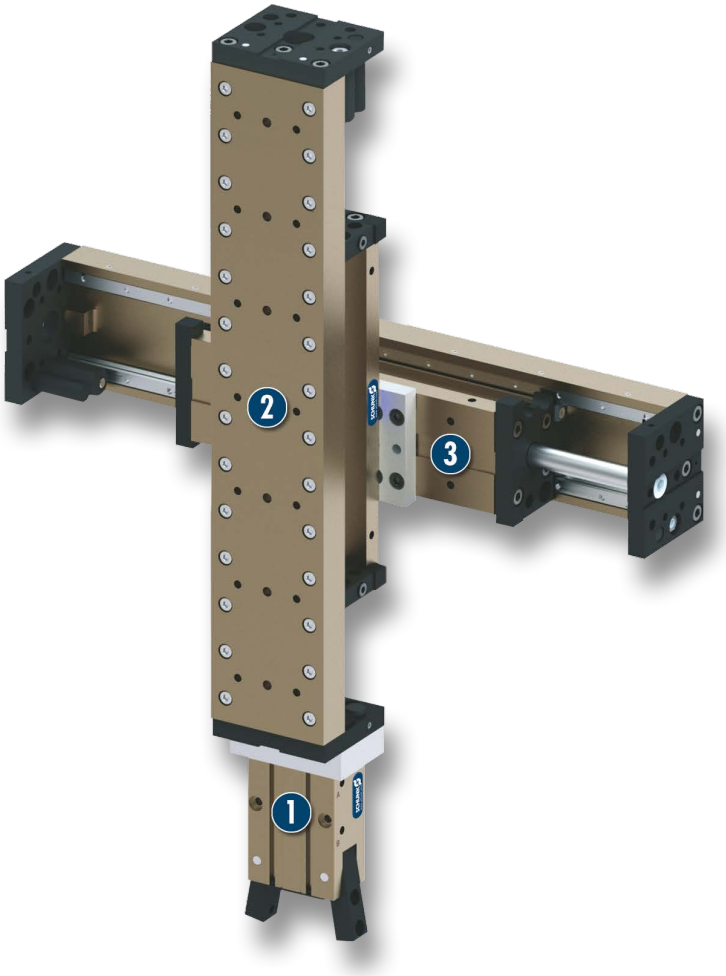


**Handling module for discharging inspection components from the assembly belt**

1. 2-Finger Angular Gripper LGW
2. Linear module LM
3. Linear module LM

## Universal Gripper
universal angular gripper for small to medium-sized workpieces with excellent cost-performance ratio

## Field of application
clean surrounding, for example an assembly area



## Your advantages and benefits

**Function optimized gripper type**
for maximum cost effectiveness

**Stable cinematics**
for high power transmission and synchronized gripping

**Matching SCHUNK C-slot switch**
for process reliable position interrogation

**Hard-anodized or hardened functional components**
for long lifetime

**Centering sleeves**
for a repeat accurate exchange of grippers and fingers

**Compact dimensions**
for minimized interfering contours

## General note to the series

**Principle of function**
double-acting, guided kinematics

**Housing material**
Aluminum alloy, hard-anodized

**Base jaw material**
Aluminum alloy, hard-anodized

**Actuation**
pneumatic, with filtered compressed air (10 microns): dry, lubricated or non-lubricated
Pressure medium: Required quality class of compressed air according to DIN ISO 8573-1: 6 4 4

**Warranty**
24 months (details, general terms and conditions and operation manuals can be downloaded under www.schunk.com)

**Scope of delivery**
Swivel fittings, centering sleeves, assembly and operation manual with manufacturer's declaration

## Sectional diagram

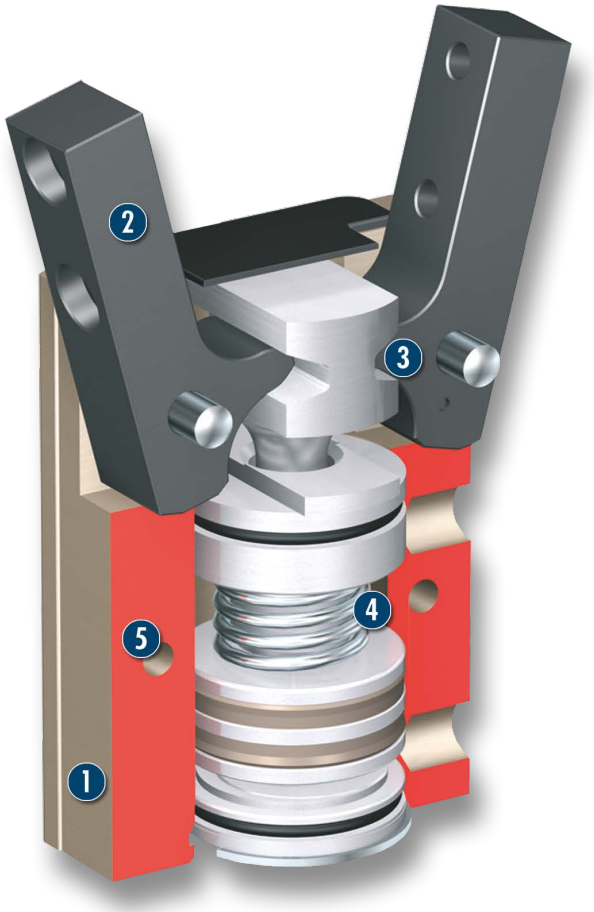


1 **Housing**
weight-optimized through application of hard-anodized, high-strength aluminum alloy

2 **Base jaw**
for the connection of workpiece-specific gripper fingers

3 **Kinematics**
precise gear for centric gripping

4 **Gripping force maintenance device**
mechanic gripping force maintenance for O.D. gripping

5 **Centering and mounting possibilities**
for assembly of the gripper to a base area and at the long side

## Functional description

The piston is moved up and down by compressed air.
The kinematics transforms this vertical motion into a synchronous and rotatory gripping motion of the base jaws.

## Options and special information

Monitoring with a SCHUNK MMS 22 or RMS 22 sensor is not possible. The use of the recommended sensors MZN and RZN is not compulsory.

## Accessories

Accessories from SCHUNK – the suitable supplement for maximum functionality, reliability and performance of all automation modules.

### Centering sleeves



### Fittings



### Magnetic Switches



### Sensor cables



### Pressure maintenance valve





### Sensor Distributor

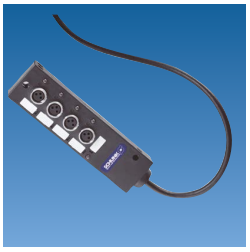

ⓘ For the exact size of the required accessories, availability of this size and the designation and ID, please refer to the additional views at the end of the size in question. You will find more detailed information on our accessory range in the “Accessories” catalog section.

## General note to the series

### Gripping moment

Gripping moment is the arithmetic total of gripping moments for each claw jaw.

### Finger length

The finger length is measured from the upper edge of the gripper housing in direction to the main axis. If the max. admissible finger length is exceeded, the speed of jaw motions have to be reduced and/or the opening angle has to be diminished, as it is done with heavy fingers. The service life of the gripper can shorten.

### Repeat accuracy

is defined as the spread of the limit position after 100 consecutive strokes.

### Workpiece weight

The recommended workpiece weight is calculated for a force-type connection with a coefficient of friction of 0.1 and a safety factor of 2 against slippage of the workpiece on acceleration due to gravity g. Considerably heavier workpiece weights are permitted with form-fit gripping.

### Closing and opening times

Closing and opening times are purely the times that the base jaws or fingers are in motion. Valve switching times, hose filling times or PLC reaction times are not included in the above times and must be taken into consideration when determining cycle times.

# LGW 10





## Gripping force, O.D. gripping

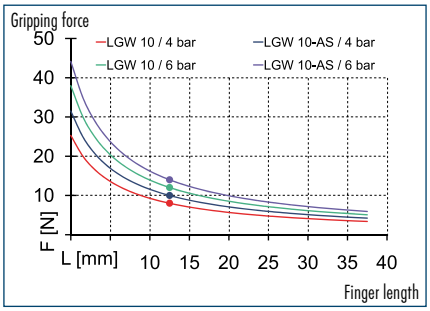


## Finger load

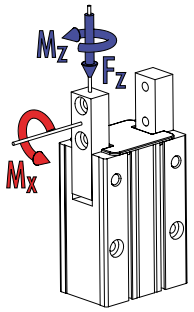


$M_x$ max. 0.40 Nm
$M_z$ max. 0.30 Nm
$F_z$ max. 18.0 N

ⓘ The indicated moments and forces are statical values, apply for each base jaw and should not appear simultaneously. If the maximum admissible finger weight is exceeded, throttling is necessary in order to ensure a smooth jaw motion without jerks or bounces. The life-time may reduce.

## Technical data

| Description | | LGW 10 | LGW 10-AS |
|---|---|---|---|
| ID | | 0312950 | 0312951 |
| Opening angle per jaw | [°] | 20 | 20 |
| Closed angle per jaw up to | [°] | 7 | 7 |
| Closing moment | [Nm] | 0.22 | 0.28 |
| Spring-actuated closing moment | [Nm] | | 0.06 |
| Weight | [kg] | 0.042 | 0.043 |
| Recommended workpiece weight | [kg] | 0.06 | 0.07 |
| Air consumption per double stroke | [cm³] | 0.7 | 0.7 |
| Min./max. operating pressure | [bar] | 2/8 | 4/6.5 |
| Nominal operating pressure | [bar] | 6 | 6 |
| Closing/opening time | [s] | 0.02/0.02 | 0.02/0.03 |
| Max. permitted finger length | [mm] | 25 | 25 |
| Max. permitted weight per finger | [kg] | 0.04 | 0.04 |
| IP class | | 40 | 40 |
| Min./max. ambient temperature | [°C] | -10/90 | -10/90 |
| Repeat accuracy | [mm] | 0.02 | 0.02 |

## Main view

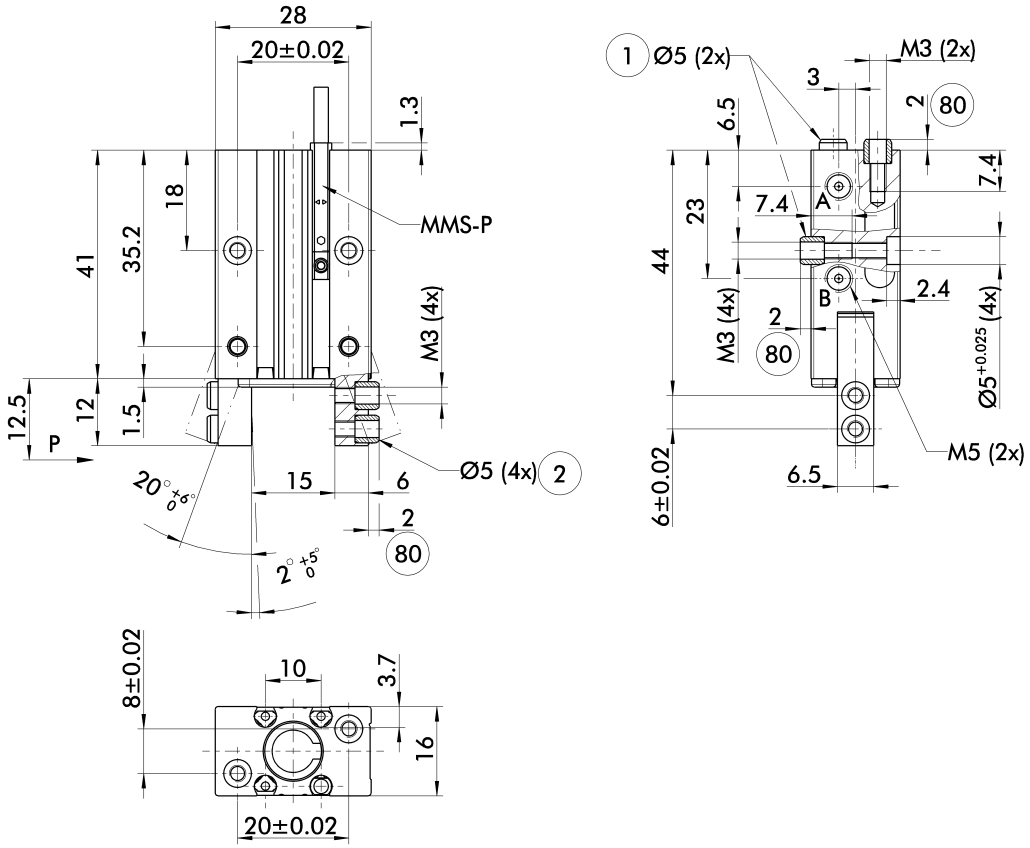


The drawing shows the gripper in the basic version with closed jaws, the dimensions do not include the options described below.

ⓘ The SDV-P pressure maintenance valve can also be used for I.D. or O.D. gripping alternatively or in addition to the spring-loaded, mechanical gripping force maintenance device (see "Accessories" catalog section).

A, a Main/direct connection, gripper opening
B, b Main/direct connection, gripper closing
① Gripper connection
② Finger connection
(80) Depth of the centering sleeve hole in the matching part

## Programmable magnetic switch

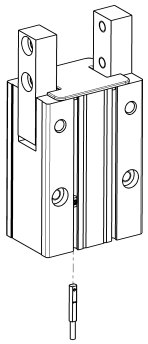

Position monitoring with two programmable positions per sensor. The end position monitoring is mounted in the C-slot.

| Description | ID | Recommended product |
|---|---|---|
| Programmable magnetic switch | | |
| MMS-P 22-S-M8-PNP | **0301370** | • |
| MMSK-P 22-S-PNP | **0301371** | |
| Connection cables | | |
| KA BG08-L 4P-0500 | **0307767** | |
| KA BG08-L 4P-1000 | **0307768** | |
| KA BW08-L 4P-0500 | **0307765** | |
| KA BW08-L 4P-1000 | **0307766** | |
| Sensor Distributor | | |
| V2-M8-4P-2XM8-3P | **0301380** | |

ⓘ Please note the minimum permitted bending radii for the sensor cables, which are generally 35 mm.
ⓘ Per gripper one sensor (closer/NO) is required, optionally a cable extension.

You can find more detailed information and individual parts of the above-mentioned accessories in the "Accessories" catalog section.

# LGW 16





## Gripping force, O.D. gripping

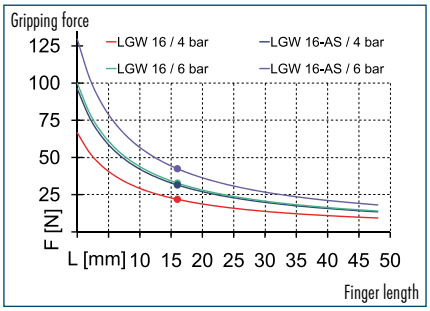


## Finger load

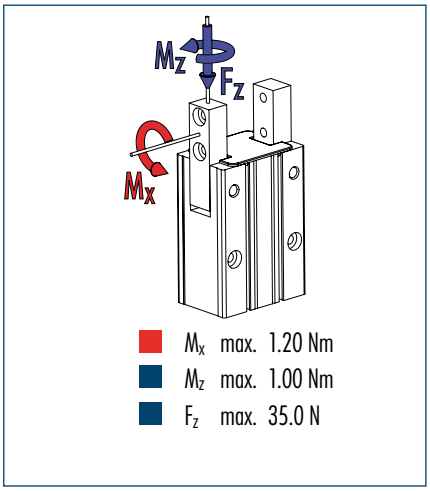


ⓘ The indicated moments and forces are statical values, apply for each base jaw and should not appear simultaneously. If the maximum admissible finger weight is exceeded, throttling is necessary in order to ensure a smooth jaw motion without jerks or bounces. The life-time may reduce.

## Technical data

| Description | | LGW 16 | LGW 16-AS |
|---|---|---|---|
| ID | | 0312952 | 0312953 |
| Opening angle per jaw | [°] | 20 | 20 |
| Closed angle per jaw up to | [°] | 7 | 7 |
| Closing moment | [Nm] | 0.78 | 1 |
| Spring-actuated closing moment | [Nm] | | 0.22 |
| Weight | [kg] | 0.088 | 0.091 |
| Recommended workpiece weight | [kg] | 0.17 | 0.21 |
| Air consumption per double stroke | [cm³] | 2.3 | 2.3 |
| Min./max. operating pressure | [bar] | 2/8 | 4/6.5 |
| Nominal operating pressure | [bar] | 6 | 6 |
| Closing/opening time | [s] | 0.03/0.02 | 0.025/0.03 |
| Max. permitted finger length | [mm] | 32 | 32 |
| Max. permitted weight per finger | [kg] | 0.05 | 0.05 |
| IP class | | 40 | 40 |
| Min./max. ambient temperature | [°C] | -10/90 | -10/90 |
| Repeat accuracy | [mm] | 0.02 | 0.02 |

## Main view

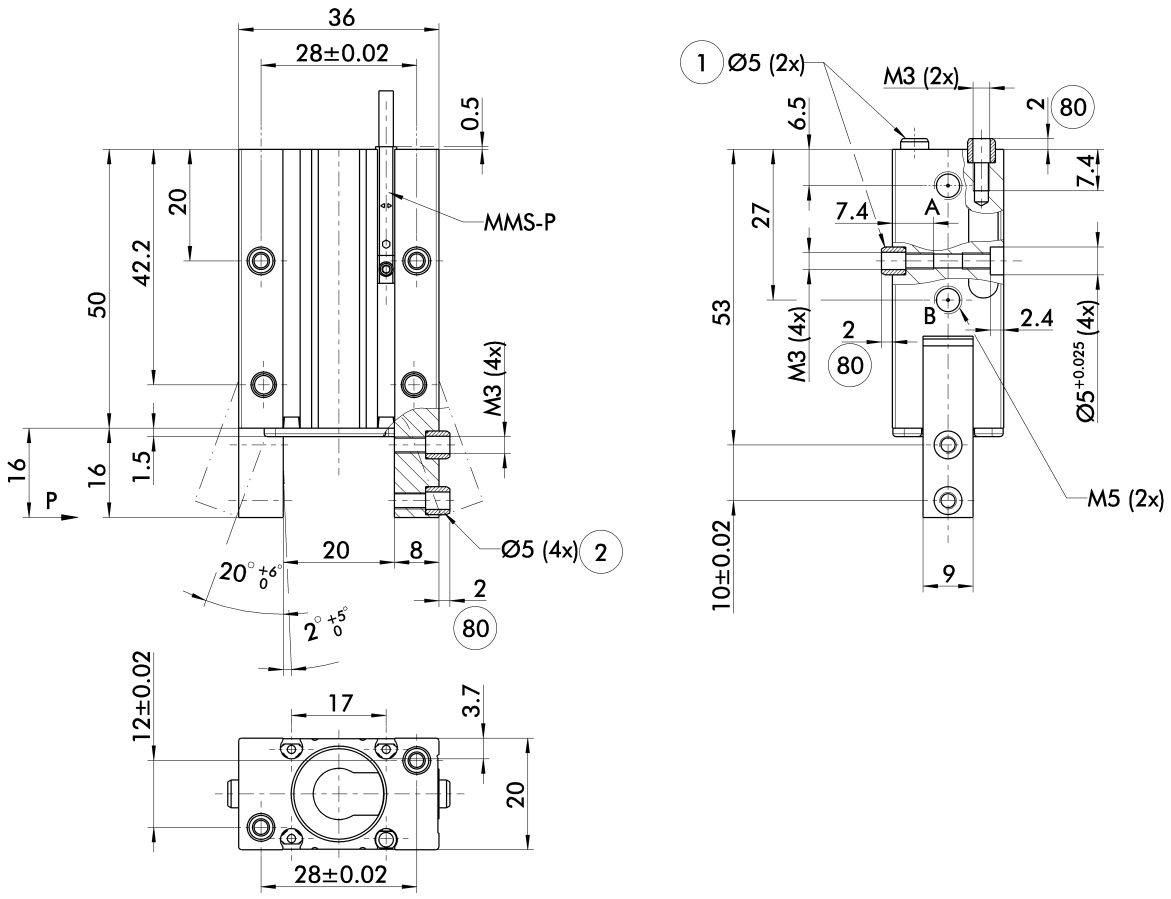


The drawing shows the gripper in the basic version with closed jaws, the dimensions do not include the options described below.

ⓘ The SDV-P pressure maintenance valve can also be used for I.D. or O.D. gripping alternatively or in addition to the spring-loaded, mechanical gripping force maintenance device (see "Accessories" catalog section).

A, a Main/direct connection, gripper opening
B, b Main/direct connection, gripper closing
① Gripper connection
② Finger connection
(80) Depth of the centering sleeve hole in the matching part

## Programmable magnetic switch

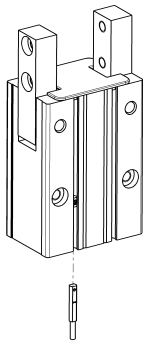

Position monitoring with two programmable positions per sensor. The end position monitoring is mounted in the C-slot.

| Description | ID | Recommended product |
|---|---|---|
| Programmable magnetic switch | | |
| MMS-P 22-S-M8-PNP | **0301370** | • |
| MMSK-P 22-S-PNP | **0301371** | |
| Connection cables | | |
| KA BG08-L 4P-0500 | **0307767** | |
| KA BG08-L 4P-1000 | **0307768** | |
| KA BW08-L 4P-0500 | **0307765** | |
| KA BW08-L 4P-1000 | **0307766** | |
| Sensor Distributor | | |
| V2-M8-4P-2XM8-3P | **0301380** | |

ⓘ Please note the minimum permitted bending radii for the sensor cables, which are generally 35 mm.
ⓘ Per gripper one sensor (closer/NO) is required, optionally a cable extension.

You can find more detailed information and individual parts of the above-mentioned accessories in the "Accessories" catalog section.

# LGW 25





## Gripping force, O.D. gripping

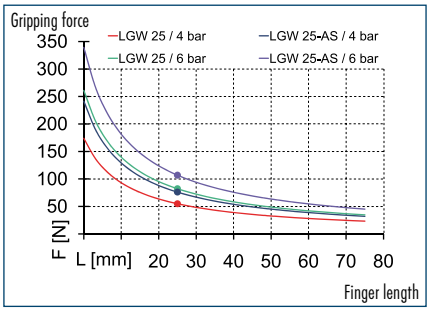


## Finger load

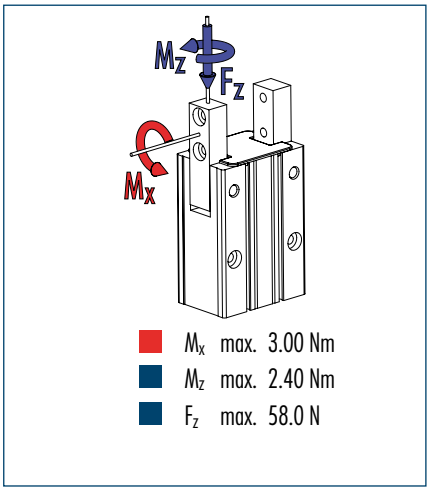


ⓘ The indicated moments and forces are statical values, apply for each base jaw and should not appear simultaneously. If the maximum admissible finger weight is exceeded, throttling is necessary in order to ensure a smooth jaw motion without jerks or bounces. The life-time may reduce.

## Technical data

| Description | | LGW 25 | LGW 25-AS |
|---|---|---|---|
| ID | | 0312954 | 0312955 |
| Opening angle per jaw | [°] | 20 | 20 |
| Closed angle per jaw up to | [°] | 7 | 7 |
| Closing moment | [Nm] | 3.2 | 4.1 |
| Spring-actuated closing moment | [Nm] | | 0.9 |
| Weight | [kg] | 0.25 | 0.255 |
| Recommended workpiece weight | [kg] | 0.45 | 0.55 |
| Air consumption per double stroke | [cm³] | 9 | 9 |
| Min./max. operating pressure | [bar] | 2/8 | 4/6.5 |
| Nominal operating pressure | [bar] | 6 | 6 |
| Closing/opening time | [s] | 0.045/0.04 | 0.06/0.07 |
| Max. permitted finger length | [mm] | 50 | 50 |
| Max. permitted weight per finger | [kg] | 0.1 | 0.1 |
| IP class | | 40 | 40 |
| Min./max. ambient temperature | [°C] | -10/90 | -10/90 |
| Repeat accuracy | [mm] | 0.02 | 0.02 |

## Main view

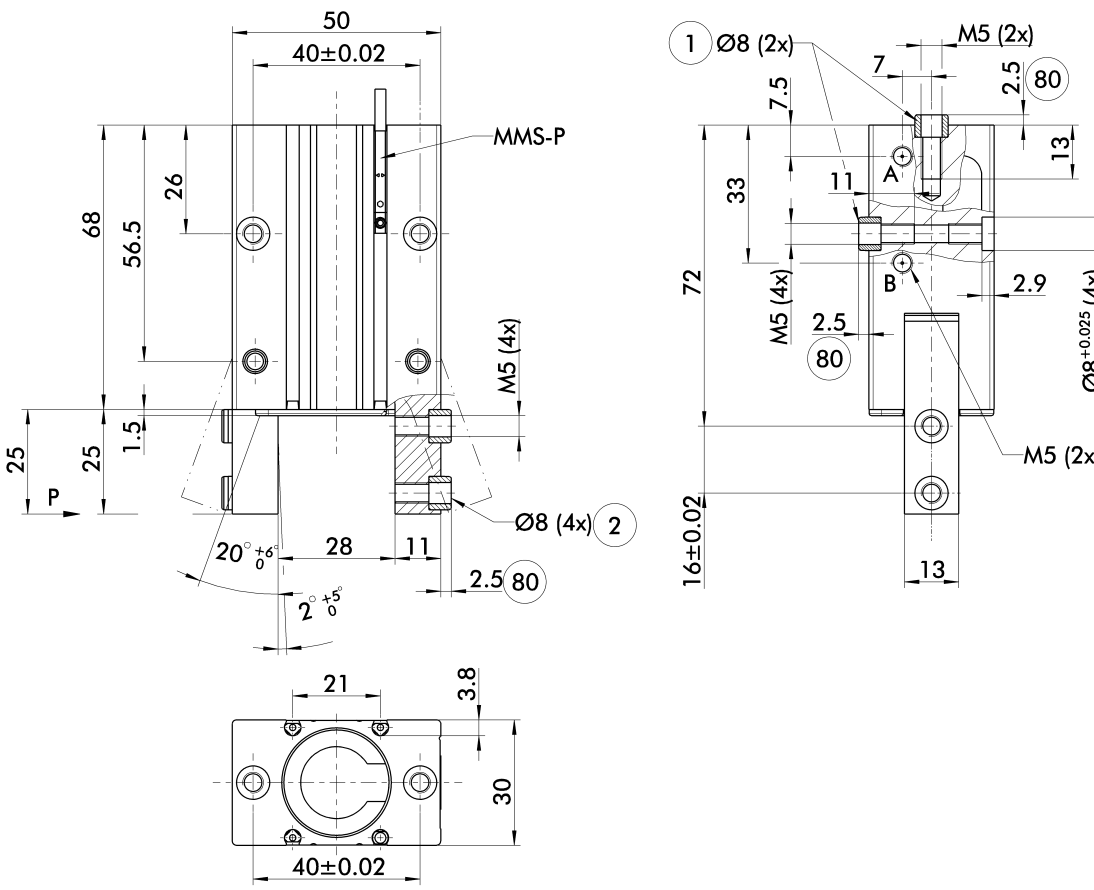


The drawing shows the gripper in the basic version with closed jaws, the dimensions do not include the options described below.

ⓘ The SDV-P pressure maintenance valve can also be used for I.D. or O.D. gripping alternatively or in addition to the spring-loaded, mechanical gripping force maintenance device (see "Accessories" catalog section).

A, a Main/direct connection, gripper opening
B, b Main/direct connection, gripper closing
① Gripper connection
② Finger connection
(80) Depth of the centering sleeve hole in the matching part

## Programmable magnetic switch

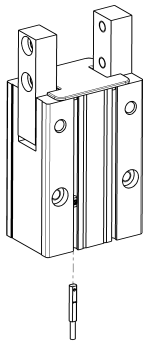

Position monitoring with two programmable positions per sensor. The end position monitoring is mounted in the C-slot.

| Description | ID | Recommended product |
|---|---|---|
| Programmable magnetic switch | | |
| MMS-P 22-S-M8-PNP | **0301370** | • |
| MMSK-P 22-S-PNP | **0301371** | |
| Connection cables | | |
| KA BG08-L 4P-0500 | **0307767** | |
| KA BG08-L 4P-1000 | **0307768** | |
| KA BW08-L 4P-0500 | **0307765** | |
| KA BW08-L 4P-1000 | **0307766** | |
| Sensor Distributor | | |
| V2-M8-4P-2XM8-3P | **0301380** | |

ⓘ Please note the minimum permitted bending radii for the sensor cables, which are generally 35 mm.
ⓘ Per gripper one sensor (closer/NO) is required, optionally a cable extension.

You can find more detailed information and individual parts of the above-mentioned accessories in the "Accessories" catalog section.

# LGW 32

**Pneumatic • 2-Finger Angular Gripper • Universal Gripper**



## Gripping force, O.D. gripping

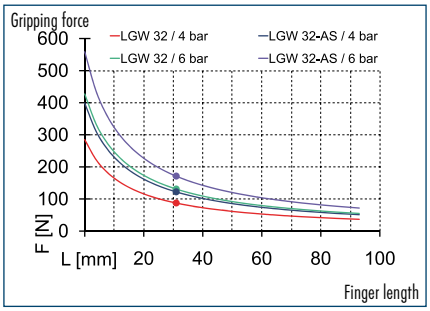


## Finger load

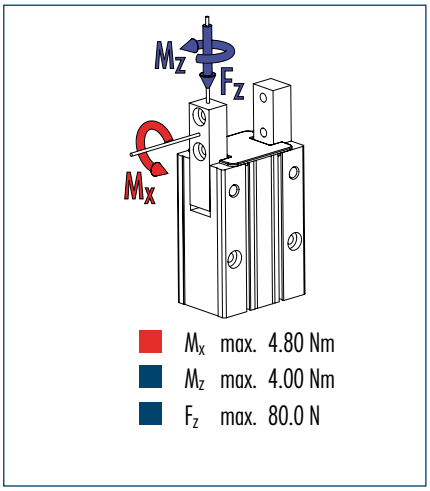


ⓘ The indicated moments and forces are statical values, apply for each base jaw and should not appear simultaneously. If the maximum admissible finger weight is exceeded, throttling is necessary in order to ensure a smooth jaw motion without jerks or bounces. The life-time may reduce.

## Technical data

| Description | | LGW 32 | LGW 32-AS |
|---|---|---|---|
| **ID** | | **0312956** | **0312957** |
| Opening angle per jaw | [°] | 20 | 20 |
| Closed angle per jaw up to | [°] | 7 | 7 |
| Closing moment | [Nm] | 5.6 | 7.4 |
| Spring-actuated closing moment | [Nm] | | 1.8 |
| Weight | [kg] | 0.46 | 0.466 |
| Recommended workpiece weight | [kg] | 0.64 | 0.84 |
| Air consumption per double stroke | [cm³] | 16.1 | 16.1 |
| Min./max. operating pressure | [bar] | 2/8 | 4/6.5 |
| Nominal operating pressure | [bar] | 6 | 6 |
| Closing/opening time | [s] | 0.05/0.055 | 0.06/0.07 |
| Max. permitted finger length | [mm] | 62 | 62 |
| Max. permitted weight per finger | [kg] | 0.13 | 0.13 |
| IP class | | 40 | 40 |
| Min./max. ambient temperature | [°C] | -10/90 | -10/90 |
| Repeat accuracy | [mm] | 0.02 | 0.02 |

## Main view

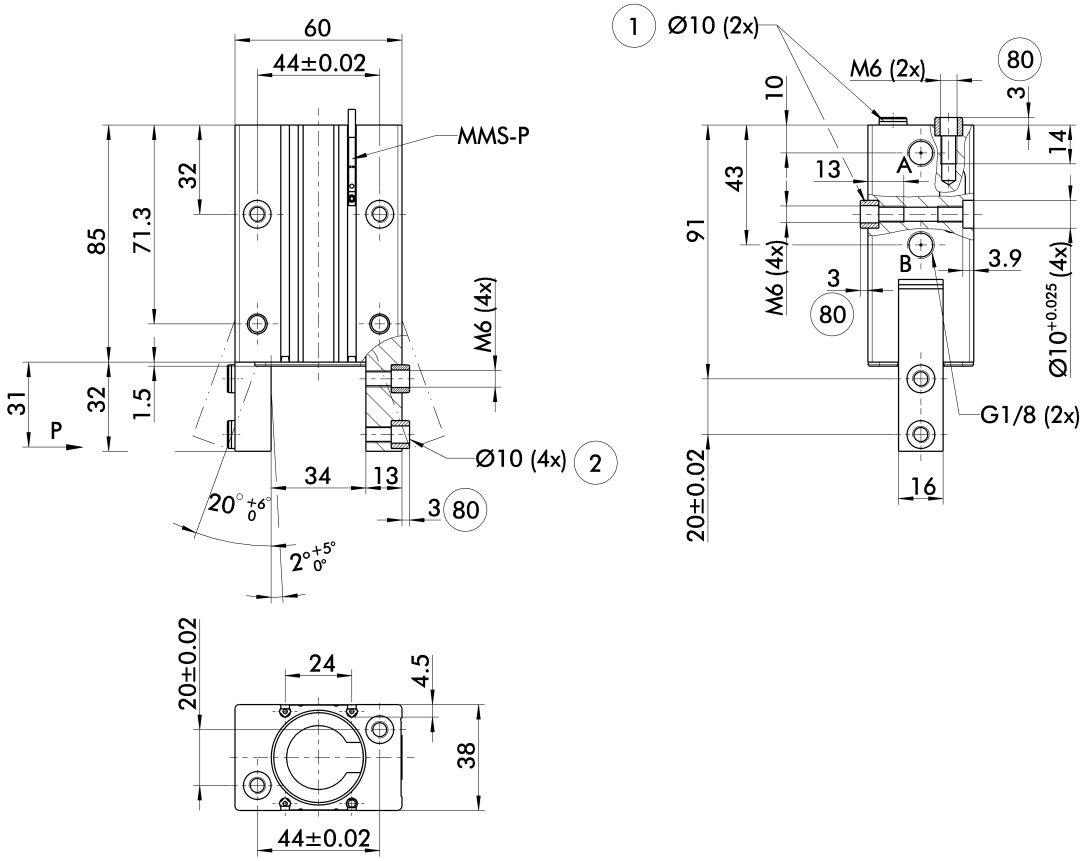


The drawing shows the gripper in the basic version with closed jaws, the dimensions do not include the options described below.

ⓘ The SDV-P pressure maintenance valve can also be used for I.D. or O.D. gripping alternatively or in addition to the spring-loaded, mechanical gripping force maintenance device (see "Accessories" catalog section).

A, a Main/direct connection, gripper opening
B, b Main/direct connection, gripper closing
① Gripper connection
② Finger connection
(80) Depth of the centering sleeve hole in the matching part

## Programmable magnetic switch

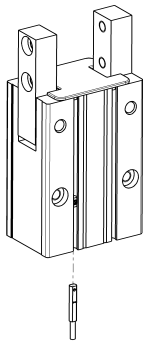

Position monitoring with two programmable positions per sensor. The end position monitoring is mounted in the C-slot.

| Description | ID | Recommended product |
|---|---|---|
| Programmable magnetic switch | | |
| MMS-P 22-S-M8-PNP | **0301370** | • |
| MMSK-P 22-S-PNP | **0301371** | |
| Connection cables | | |
| KA BG08-L 4P-0500 | **0307767** | |
| KA BG08-L 4P-1000 | **0307768** | |
| KA BW08-L 4P-0500 | **0307765** | |
| KA BW08-L 4P-1000 | **0307766** | |
| Sensor Distributor | | |
| V2-M8-4P-2XM8-3P | **0301380** | |

ⓘ Please note the minimum permitted bending radii for the sensor cables, which are generally 35 mm.
ⓘ Per gripper one sensor (closer/NO) is required, optionally a cable extension.

You can find more detailed information and individual parts of the above-mentioned accessories in the "Accessories" catalog section.

# LGW 40





## Gripping force, O.D. gripping

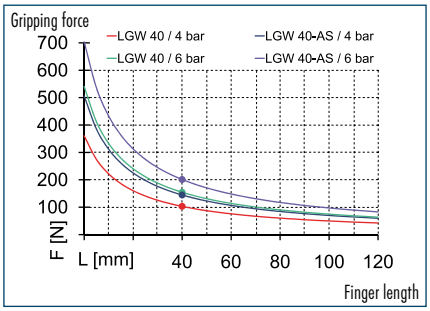


## Finger load

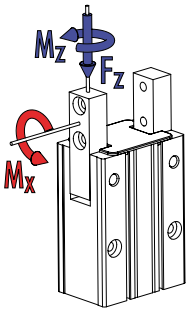


$M_x$ max. 7.00 Nm
$M_z$ max. 5.60 Nm
$F_z$ max. 130.0 N

ⓘ The indicated moments and forces are statical values, apply for each base jaw and should not appear simultaneously. If the maximum admissible finger weight is exceeded, throttling is necessary in order to ensure a smooth jaw motion without jerks or bounces. The life-time may reduce.

## Technical data

| Description | | LGW 40 | LGW 40-AS |
|---|---|---|---|
| ID | | 0312958 | 0312959 |
| Opening angle per jaw | [°] | 20 | 20 |
| Closed angle per jaw up to | [°] | 7 | 7 |
| Closing moment | [Nm] | 8.6 | 11.2 |
| Spring-actuated closing moment | [Nm] | | 2.6 |
| Weight | [kg] | 0.83 | 0.845 |
| Recommended workpiece weight | [kg] | 0.78 | 1 |
| Air consumption per double stroke | [cm³] | 31 | 31 |
| Min./max. operating pressure | [bar] | 2/8 | 4/6.5 |
| Nominal operating pressure | [bar] | 6 | 6 |
| Closing/opening time | [s] | 0.055/0.055 | 0.06/0.09 |
| Max. permitted finger length | [mm] | 80 | 80 |
| Max. permitted weight per finger | [kg] | 0.22 | 0.22 |
| IP class | | 40 | 40 |
| Min./max. ambient temperature | [°C] | -10/90 | -10/90 |
| Repeat accuracy | [mm] | 0.02 | 0.02 |

## Main view

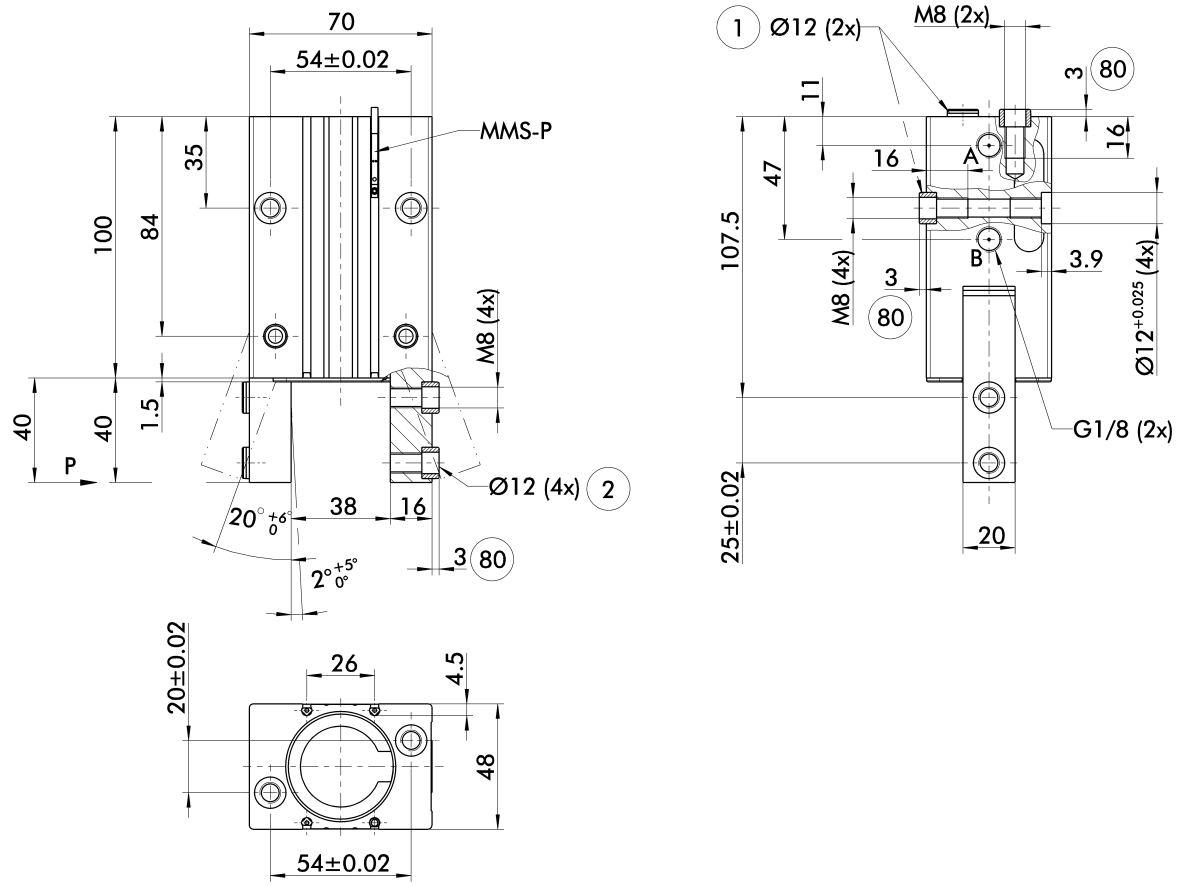


The drawing shows the gripper in the basic version with closed jaws, the dimensions do not include the options described below.

ⓘ The SDV-P pressure maintenance valve can also be used for I.D. or O.D. gripping alternatively or in addition to the spring-loaded, mechanical gripping force maintenance device (see "Accessories" catalog section).

A, a Main/direct connection, gripper opening
B, b Main/direct connection, gripper closing
① Gripper connection
② Finger connection
(80) Depth of the centering sleeve hole in the matching part

## Programmable magnetic switch

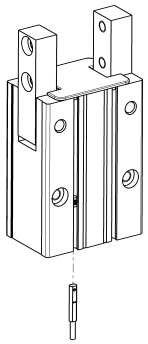

Position monitoring with two programmable positions per sensor. The end position monitoring is mounted in the C-slot.

| Description | ID | Recommended product |
|---|---|---|
| Programmable magnetic switch | | |
| MMS-P 22-S-M8-PNP | **0301370** | • |
| MMSK-P 22-S-PNP | **0301371** | |
| Connection cables | | |
| KA BG08-L 4P-0500 | **0307767** | |
| KA BG08-L 4P-1000 | **0307768** | |
| KA BW08-L 4P-0500 | **0307765** | |
| KA BW08-L 4P-1000 | **0307766** | |
| Sensor Distributor | | |
| V2-M8-4P-2XM8-3P | **0301380** | |

ⓘ Please note the minimum permitted bending radii for the sensor cables, which are generally 35 mm.
ⓘ Per gripper one sensor (closer/NO) is required, optionally a cable extension.

You can find more detailed information and individual parts of the above-mentioned accessories in the "Accessories" catalog section.

# PWG-S

**Pneumatic • 2-Finger Angular Gripper • Universal Gripper**

**Sizes**
40 ... 80

**Weight**
0.21 kg ... 1.2 kg

**Gripping moment**
5.98 Nm ... 50.82 Nm

**Angle per jaw**
20°

**Workpiece weight**
1.1 kg ... 4.8 kg

## Application example

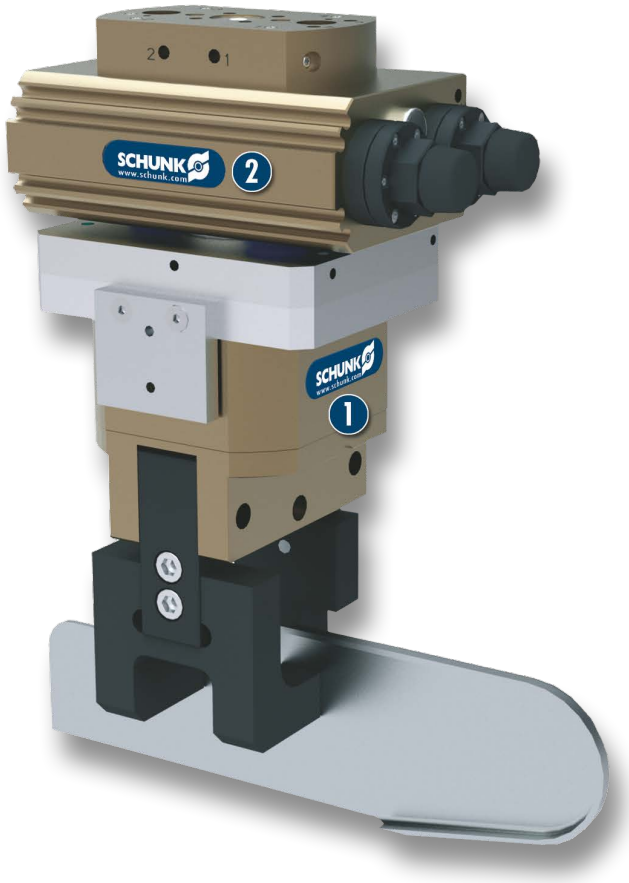


Rotating/gripping combination for flexible handling of sheet metal components

1. 2-Finger Angular Gripper PWG-S
2. Rotary Actuator SRU-plus

## Universal Gripper

robust 2-finger angular gripper with spring-supported gripping force maintenance device

## Field of application

for universal use in clean and slightly dirty environments

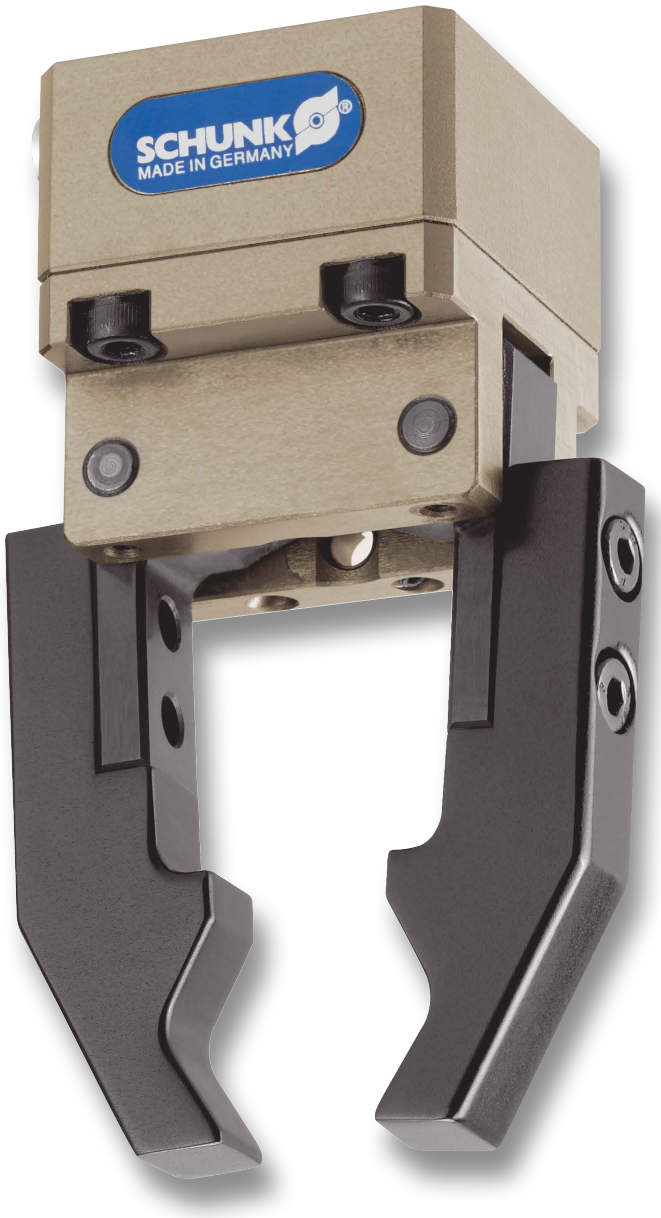


## Your advantages and benefits

**Spring-supported gripping force maintenance for O.D. gripping**
holds the workpiece in case of pressure drop, always integrated

**Proximity switch mounted directly without additional brackets**
Eliminating unnecessary interfering contours

**Minimum gripper dimensions at a maximum gripping force**
thus achieves an excellent power density

**Robust gripper design**
for a versatile field of applications

**Kinematics**
for high power transmission and synchronized gripping

## General note to the series

**Principle of function**
Toggle drive system

**Housing material**
Aluminum alloy, hard-anodized

**Base jaw material**
Steel

**Actuation**
pneumatic, with filtered compressed air (10 microns): dry, lubricated or non-lubricated
Pressure medium: Required quality class of compressed air according to DIN ISO 8573-1: 6 4 4

**Warranty**
24 months (details, general terms and conditions and operation manuals can be downloaded under www.schunk.com)

**Scope of delivery**
O-rings for direct connection, assembly and operating manual with manufacturer's declaration

**Gripping force maintenance device**
always equipped with a mechanic gripping force maintenance device for O.D. gripping

## Sectional diagram

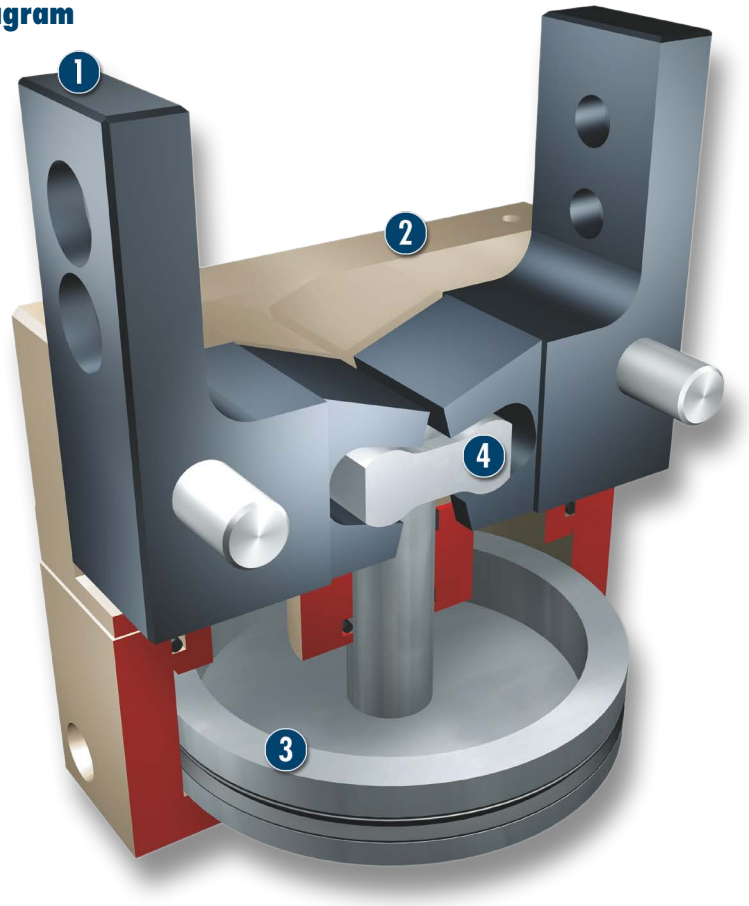


**1 Base jaw**
for the connection of workpiece-specific gripper fingers

**2 Housing**
weight-optimized through application of hard-anodized, high-strength aluminum alloy

**3 Drive**
pneumatic, powerful and easy to handle

**4 Lever mechanism**
for precise and synchronized gripping

## Functional description

The piston is moved up and down by compressed air.
The kinematics transforms this vertical motion into a synchronous and rotatory gripping motion of the base jaws.

## Options and special information

Reduced opening angle available on request.

## Accessories

Accessories from SCHUNK – the suitable supplement for maximum functionality, reliability and performance of all automation modules.

### Centering sleeves



### Fittings



### Pressure maintenance valve



### Inductive proximity switches



### Plastic inserts






### Sensor cables



### Gripper pads

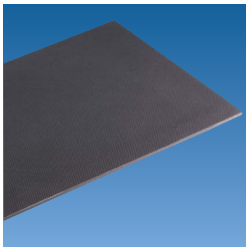

### Sensor Distributor

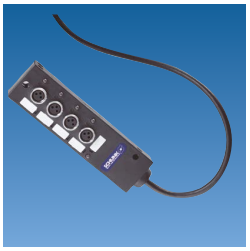

ⓘ For the exact size of the required accessories, availability of this size and the designation and ID, please refer to the additional views at the end of the size in question. You will find more detailed information on our accessory range in the “Accessories” catalog section.

## General note to the series

### Gripping moment

Gripping moment is the arithmetic total of gripping moments for each claw jaw.

### Finger length

The finger length is measured from the upper edge of the gripper housing in direction to the main axis. If the max. admissible finger length is exceeded, the speed of jaw motions have to be reduced and/or the opening angle has to be diminished, as it is done with heavy fingers. The service life of the gripper can shorten.

### Repeat accuracy

is defined as the spread of the limit position after 100 consecutive strokes.

### Workpiece weight

The recommended workpiece weight is calculated for a force-type connection with a coefficient of friction of 0.1 and a safety factor of 2 against slippage of the workpiece on acceleration due to gravity g. Considerably heavier workpiece weights are permitted with form-fit gripping.

### Closing and opening times

Closing and opening times are purely the times that the base jaws or fingers are in motion. Valve switching times, hose filling times or PLC reaction times are not included in the above times and must be taken into consideration when determining cycle times.

# PWG-S 40






## Gripping force, O.D. gripping

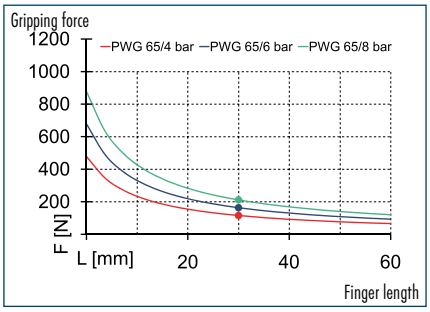


## Finger load

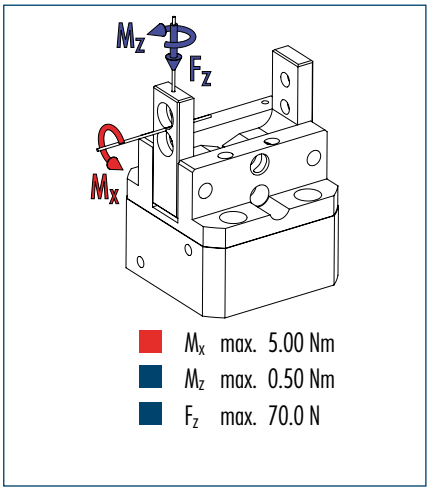


ⓘ The indicated moments and forces are statical values, apply for each base jaw and should not appear simultaneously. If the maximum admissible finger weight is exceeded, throttling is necessary in order to ensure a smooth jaw motion without jerks or bounces. The life-time may reduce.

## Technical data

| Description | | PWG-S 40 |
|---|---|---|
| ID | | 0302611 |
| Opening angle per jaw | [°] | 20 |
| Closed angle per jaw up to | [°] | 4 |
| Closing moment | [Nm] | 5.98 |
| Spring-actuated closing moment | [Nm] | 0.9 |
| Weight | [kg] | 0.21 |
| Recommended workpiece weight | [kg] | 1.1 |
| Air consumption per double stroke | [cm³] | 7.5 |
| Min./max. operating pressure | [bar] | 4/8 |
| Nominal operating pressure | [bar] | 6 |
| Closing/opening time | [s] | 0.01/0.01 |
| Max. permitted finger length | [mm] | 40 |
| Max. permitted weight per finger | [kg] | 0.15 |
| IP class | | 20 |
| Min./max. ambient temperature | [°C] | -10/90 |
| Repeat accuracy | [mm] | 0.05 |

## Main view

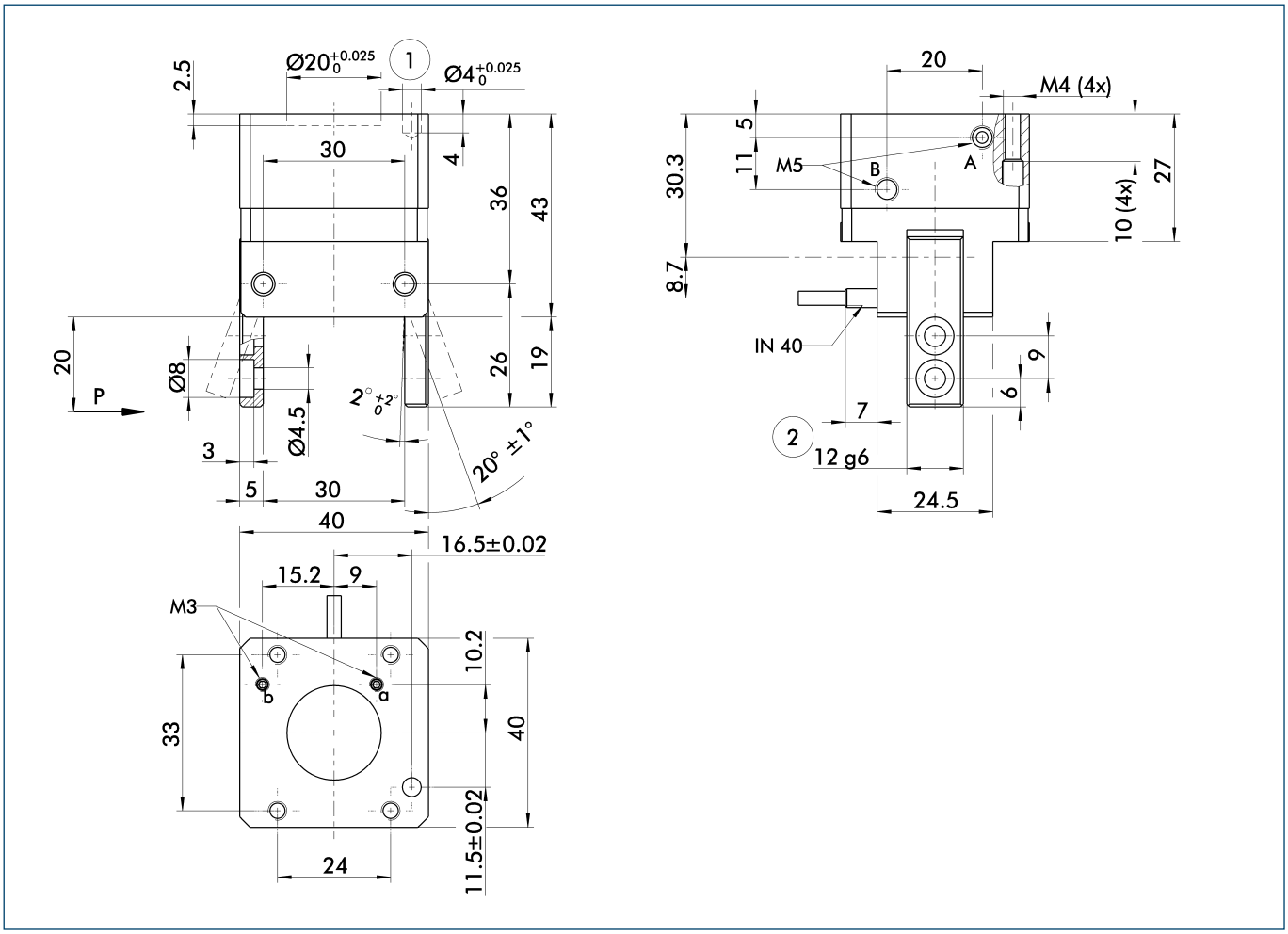


The drawing shows the gripper in the basic version with closed jaws, the dimensions do not include the options described below.

ⓘ The SDV-P pressure maintenance valve can be used to hold the position in case of pressure drop (see "Accessories" catalog section).

A, a Main/direct connection, gripper opening
B, b Main/direct connection, gripper closing

① Gripper connection
② Finger connection

## Hose-free direct connection

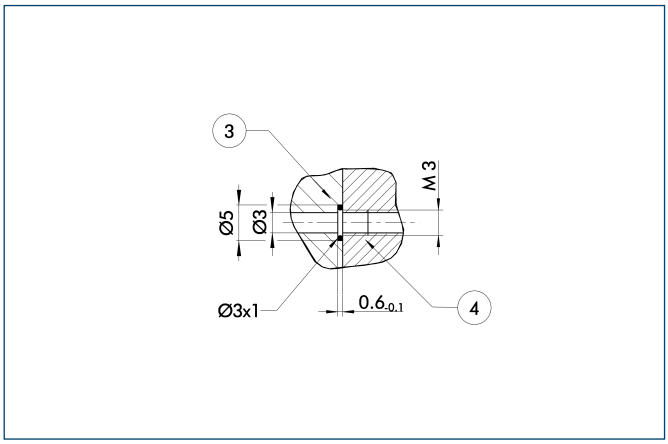


③ Adapter
④ Gripper

The direct connection is used for supplying compressed air without hoses. Instead, the pressure medium is fed through bore-holes in the mounting plate.

## Inductive proximity switches

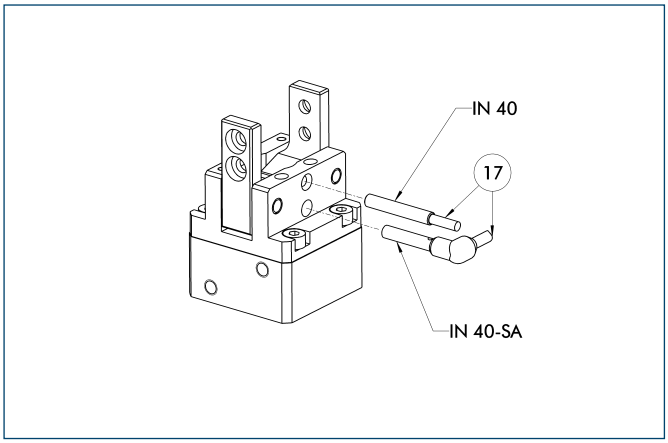


⑰ Cable outlet

End position monitoring for direct mounting

| Description | ID | Recommended product |
|---|---|---|
| Inductive proximity switches | | |
| IN 40-S-M8 | **0301474** | • |
| IN 40-S-M12 | **0301574** | |
| INK 40-S | **0301555** | |
| IN 40-S-M5-PNP | **0301491** | |
| IN 40-S-M5-NPN | **0301492** | |
| Inductive proximity switch with lateral outlet | | |
| IN 40-S-M12-SA | **0301577** | |
| IN 40-S-M8-SA | **0301473** | • |
| INK 40-S-SA | **0301565** | |
| Connection cables | | |
| KA BG05-L 3P-0300 | **0301652** | |
| KA BG08-L 3P-0300-PNP | **0301622** | |
| KA BG08-L 3P-0500-PNP | **0301623** | |
| KA BG12-L 3P-0500-PNP | **30016369** | |
| KA BW05-L 3P-0300 | **0301650** | |
| KA BW08-L 3P-0300-PNP | **0301594** | |
| KA BW08-L 3P-0500-PNP | **0301502** | |
| KA BW12-L 3P-0300-PNP | **0301503** | |
| KA BW12-L 3P-0500-PNP | **0301507** | |
| Cable extensions | | |
| KV BG12-SG12 3P-0030-PNP | **0301999** | |
| KV BG12-SG12 3P-0060-PNP | **0301998** | |
| KV BW08-SG08 3P-0030-PNP | **0301495** | |
| KV BW08-SG08 3P-0100-PNP | **0301496** | |
| KV BW08-SG08 3P-0200-PNP | **0301497** | |
| KV BW12-SG12 3P-0030-PNP | **0301595** | |
| KV BW12-SG12 3P-0100-PNP | **0301596** | |
| KV BW12-SG12 3P-0200-PNP | **0301597** | |

ⓘ Two sensors (closer/NO) are required for each gripper, plus extension cables as an option.

ⓘ Please note the minimum permitted bending radii for the sensor cables, which are generally 35 mm.

You can find more detailed information and individual parts of the above-mentioned accessories in the “Accessories” catalog section.

# PWG-S 60






## Gripping force, O.D. gripping

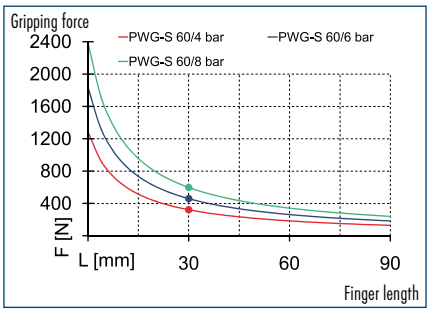


## Finger load

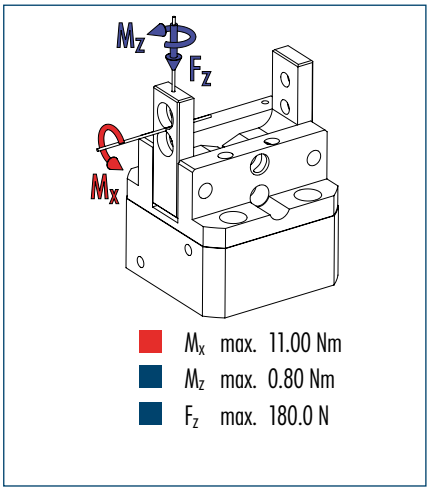


ⓘ The indicated moments and forces are statical values, apply for each base jaw and should not appear simultaneously. If the maximum admissible finger weight is exceeded, throttling is necessary in order to ensure a smooth jaw motion without jerks or bounces. The life-time may reduce.

## Technical data

| Description | | PWG-S 60 |
|---|---|---|
| **ID** | | **0302612** |
| Opening angle per jaw | [°] | 20 |
| Closed angle per jaw up to | [°] | 4 |
| Closing moment | [Nm] | 18.36 |
| Spring-actuated closing moment | [Nm] | 2.4 |
| Weight | [kg] | 0.62 |
| Recommended workpiece weight | [kg] | 2.3 |
| Air consumption per double stroke | [cm³] | 29 |
| Min./max. operating pressure | [bar] | 4/8 |
| Nominal operating pressure | [bar] | 6 |
| Closing/opening time | [s] | 0.03/0.03 |
| Max. permitted finger length | [mm] | 60 |
| Max. permitted weight per finger | [kg] | 0.4 |
| IP class | | 20 |
| Min./max. ambient temperature | [°C] | -10/90 |
| Repeat accuracy | [mm] | 0.05 |

## Main view

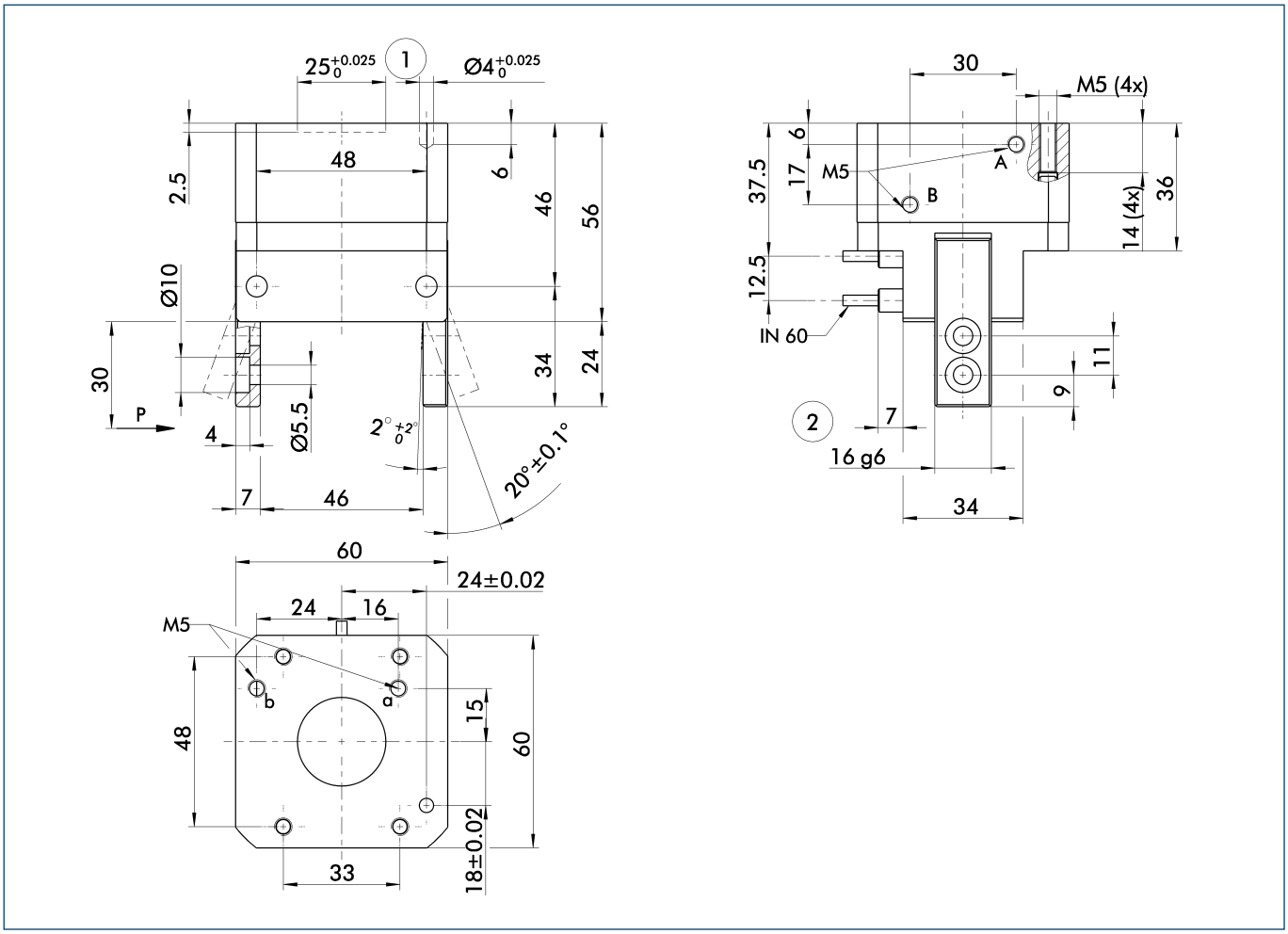


The drawing shows the gripper in the basic version with closed jaws, the dimensions do not include the options described below.

ⓘ The SDV-P pressure maintenance valve can be used to hold the position in case of pressure drop (see "Accessories" catalog section).

A, a Main/direct connection, gripper opening
B, b Main/direct connection, gripper closing

① Gripper connection
② Finger connection

## Hose-free direct connection

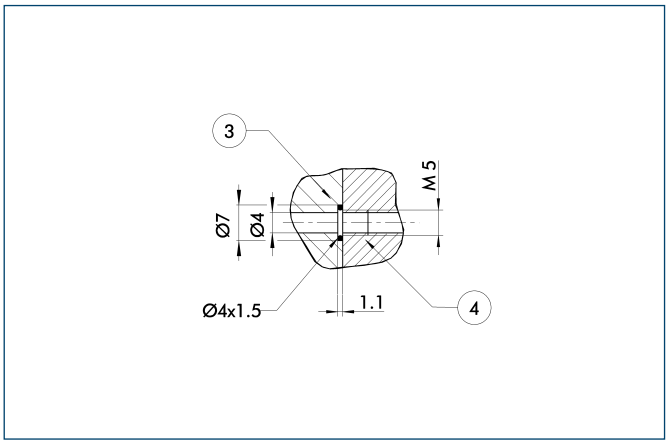


③ Adapter
④ Gripper

The direct connection is used for supplying compressed air without hoses. Instead, the pressure medium is fed through bore-holes in the mounting plate.

## Inductive proximity switches

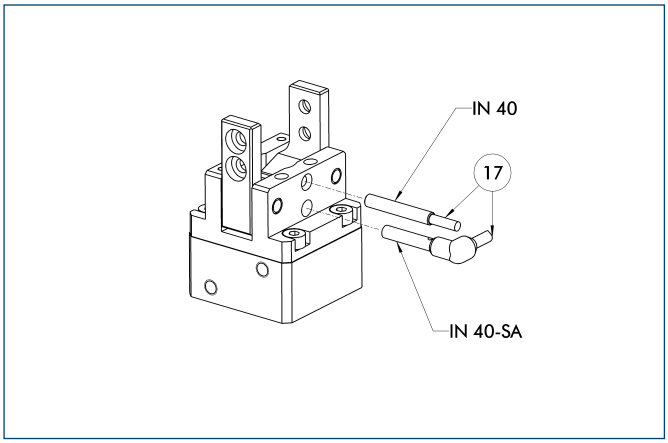


⑰ Cable outlet

End position monitoring for direct mounting

| Description | ID | Recommended product |
|---|---|---|
| Inductive proximity switches | | |
| IN 60-S-M8 | **0301485** | • |
| IN 60-S-M12 | **0301585** | |
| INK 60-S | **0301553** | |
| Connection cables | | |
| KA BG08-L 3P-0300-PNP | **0301622** | |
| KA BG08-L 3P-0500-PNP | **0301623** | |
| KA BG12-L 3P-0500-PNP | **30016369** | |
| KA BW08-L 3P-0300-PNP | **0301594** | |
| KA BW08-L 3P-0500-PNP | **0301502** | |
| KA BW12-L 3P-0300-PNP | **0301503** | |
| KA BW12-L 3P-0500-PNP | **0301507** | |
| Cable extensions | | |
| KV BG12-SG12 3P-0030-PNP | **0301999** | |
| KV BG12-SG12 3P-0060-PNP | **0301998** | |
| KV BW08-SG08 3P-0030-PNP | **0301495** | |
| KV BW08-SG08 3P-0100-PNP | **0301496** | |
| KV BW08-SG08 3P-0200-PNP | **0301497** | |
| KV BW12-SG12 3P-0030-PNP | **0301595** | |
| KV BW12-SG12 3P-0100-PNP | **0301596** | |
| KV BW12-SG12 3P-0200-PNP | **0301597** | |

ⓘ Two sensors (closer/NO) are required for each gripper, plus extension cables as an option.

ⓘ Please note the minimum permitted bending radii for the sensor cables, which are generally 35 mm.

You can find more detailed information and individual parts of the above-mentioned accessories in the “Accessories” catalog section.

# PWG-S 80





## Gripping force, O.D. gripping

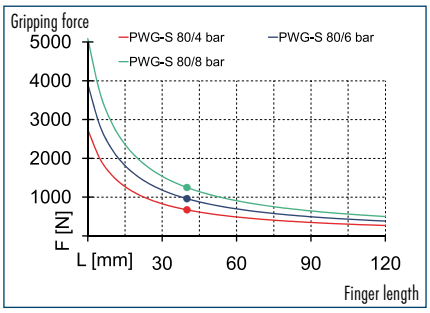


## Finger load

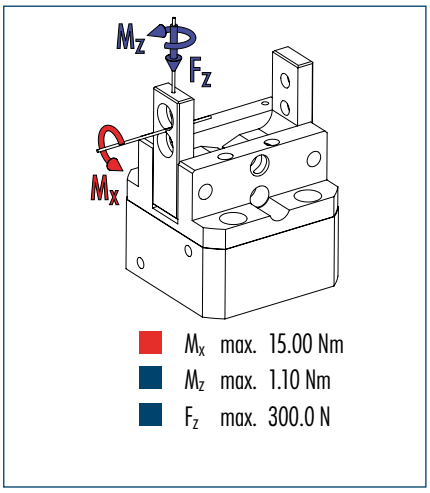


ⓘ The indicated moments and forces are statical values, apply for each base jaw and should not appear simultaneously. If the maximum admissible finger weight is exceeded, throttling is necessary in order to ensure a smooth jaw motion without jerks or bounces. The life-time may reduce.

## Technical data

| Description | | PWG-S 80 |
|---|---|---|
| ID | | 0302613 |
| Opening angle per jaw | [°] | 20 |
| Closed angle per jaw up to | [°] | 4 |
| Closing moment | [Nm] | 50.82 |
| Spring-actuated closing moment | [Nm] | 10.1 |
| Weight | [kg] | 1.2 |
| Recommended workpiece weight | [kg] | 4.8 |
| Air consumption per double stroke | [cm³] | 60 |
| Min./max. operating pressure | [bar] | 4/8 |
| Nominal operating pressure | [bar] | 6 |
| Closing/opening time | [s] | 0.05/0.05 |
| Max. permitted finger length | [mm] | 80 |
| Max. permitted weight per finger | [kg] | 0.8 |
| IP class | | 20 |
| Min./max. ambient temperature | [°C] | -10/90 |
| Repeat accuracy | [mm] | 0.05 |

## Main view

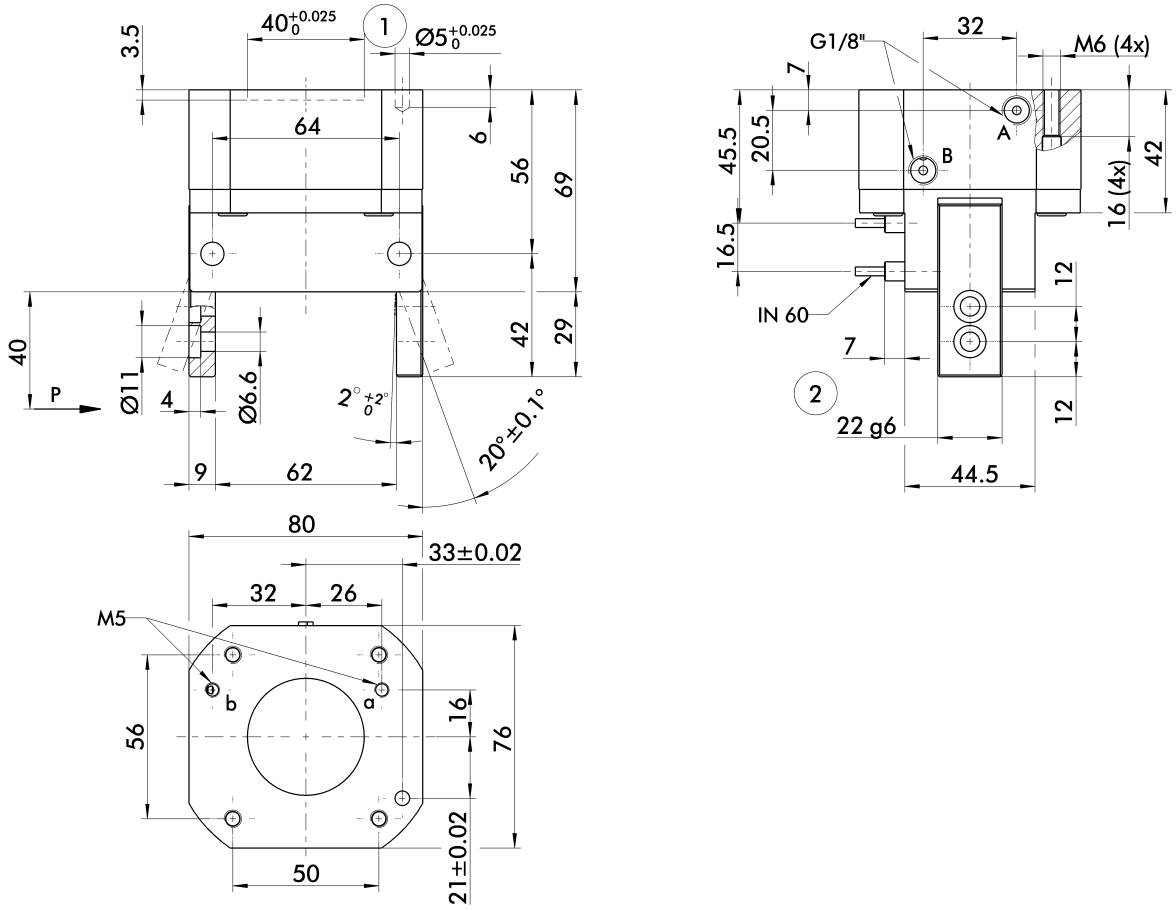


The drawing shows the gripper in the basic version with closed jaws, the dimensions do not include the options described below.

A, a Main/direct connection, gripper opening
B, b Main/direct connection, gripper closing

① Gripper connection
② Finger connection

ⓘ The SDV-P pressure maintenance valve can be used to hold the position in case of pressure drop (see "Accessories" catalog section).

## Hose-free direct connection

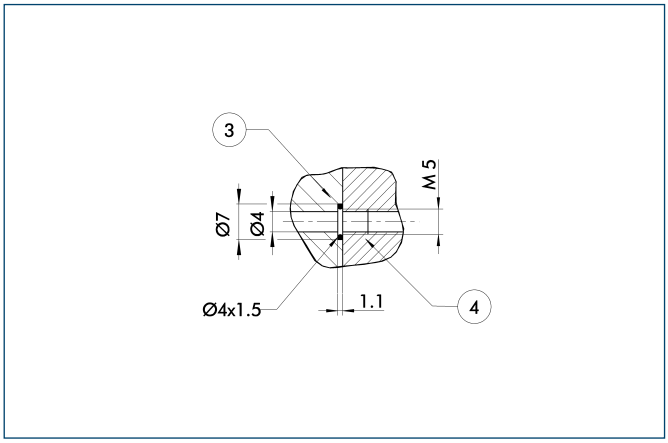


③ Adapter
④ Gripper

The direct connection is used for supplying compressed air without hoses. Instead, the pressure medium is fed through bore-holes in the mounting plate.

## Inductive proximity switches

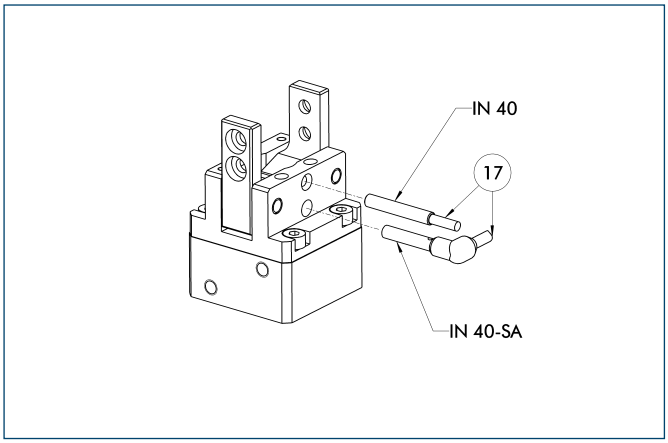


⑰ Cable outlet

End position monitoring for direct mounting

| Description | ID | Recommended product |
|---|---|---|
| Inductive proximity switches | | |
| IN 60-S-M8 | **0301485** | • |
| IN 60-S-M12 | **0301585** | |
| INK 60-S | **0301553** | |
| Connection cables | | |
| KA BG08-L 3P-0300-PNP | **0301622** | |
| KA BG08-L 3P-0500-PNP | **0301623** | |
| KA BG12-L 3P-0500-PNP | **30016369** | |
| KA BW08-L 3P-0300-PNP | **0301594** | |
| KA BW08-L 3P-0500-PNP | **0301502** | |
| KA BW12-L 3P-0300-PNP | **0301503** | |
| KA BW12-L 3P-0500-PNP | **0301507** | |
| Cable extensions | | |
| KV BG12-SG12 3P-0030-PNP | **0301999** | |
| KV BG12-SG12 3P-0060-PNP | **0301998** | |
| KV BW08-SG08 3P-0030-PNP | **0301495** | |
| KV BW08-SG08 3P-0100-PNP | **0301496** | |
| KV BW08-SG08 3P-0200-PNP | **0301497** | |
| KV BW12-SG12 3P-0030-PNP | **0301595** | |
| KV BW12-SG12 3P-0100-PNP | **0301596** | |
| KV BW12-SG12 3P-0200-PNP | **0301597** | |

ⓘ Two sensors (closer/NO) are required for each gripper, plus extension cables as an option.

ⓘ Please note the minimum permitted bending radii for the sensor cables, which are generally 35 mm.

You can find more detailed information and individual parts of the above-mentioned accessories in the “Accessories” catalog section.

# PWG



**Sizes**
65 ... 230

**Weight**
0.33 kg ... 16.3 kg

**Gripping moment**
6.44 Nm ... 934.2 Nm

**Angle per jaw**
20°

**Workpiece weight**
0.8 kg ... 35.8 kg

## Application example

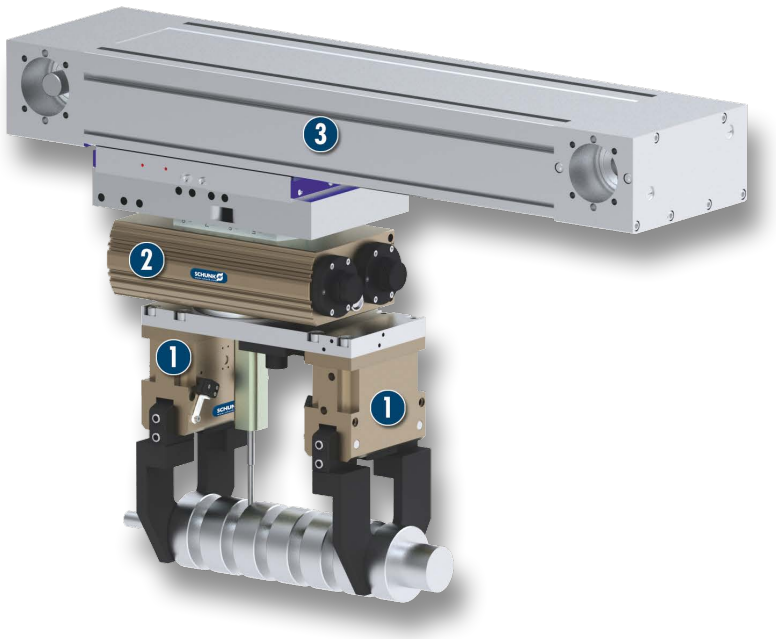


Rotary feed unit for shafts

1. 2-Finger Angular Gripper PWG
2. Rotary Actuator SRU-plus
3. Linear axis with toothed-belt drive HSB Beta

## Universal Gripper

robust 2-finger angular gripper with spring-supported gripping force maintenance device

## Field of application

for universal use in clean and slightly dirty environments




## Your advantages and benefits

**Variable top jaw design**
as gripper is available both as a jaw version (-B) and a finger version (-F)

**FPS measuring system**
monitoring of jaw position or of 5 ranges by means of the add-on FPS sensor

**Gripping force maintenance device**
always with an integrated gripping force maintenance device for a high process reliability

**Can be used in tough environments**
thanks to the gripper's sturdy construction

## General note to the series

**Principle of function**
Toggle drive system

**Housing material**
Aluminum alloy, hard-anodized

**Base jaw material**
Steel

**Actuation**
pneumatic, with filtered compressed air (10 microns): dry, lubricated or non-lubricated
Pressure medium: Required quality class of compressed air according to DIN ISO 8573-1: 6 4 4

**Warranty**
24 months (details, general terms and conditions and operation manuals can be downloaded under www.schunk.com)

**Scope of delivery**
Brackets for proximity switches, control cams, centering sleeves, O-rings for direct connection, assembly and operating manual with declaration of incorporation

## Sectional diagram

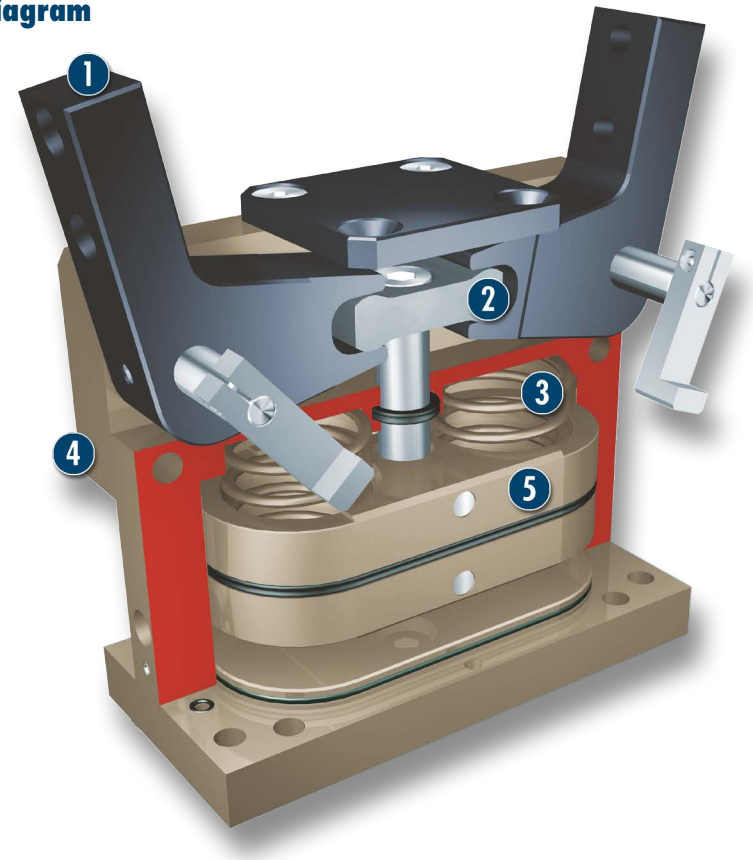


**1 Base jaw**
for the connection of workpiece-specific gripper fingers

**2 Lever mechanism**
for precise and synchronized gripping

**3 Gripping force maintenance device**
mechanic gripping force maintenance for O.D. gripping

**4 Housing**
weight-optimized through application of hard-anodized, high-strength aluminum alloy

**5 Drive**
pneumatic oval piston for maximum driving force

## Functional description

180° angular grippers (radial grippers) are advantageous in order to avoid additional stroke motions. Since each jaw rotates away by 90°, they are mostly removed from the work area; a stroke motion to retract the entire gripper can be omitted.
The kinematics transforms this vertical motion into a synchronous and rotatory gripping motion of the base jaws.

## Options and special information

This series is especially suitable for handling crankshafts and camshafts.

## Accessories

Accessories from SCHUNK – the suitable supplement for maximum functionality, reliability and performance of all automation modules.

### Centering sleeves



### Fittings



### Inductive proximity switches



### Sensor cables



### Plastic inserts





### Sensor Distributor

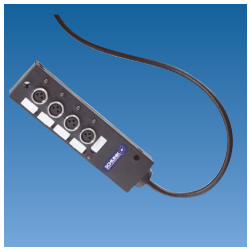

### Gripper pads

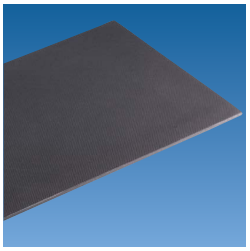

### Flexible Position Sensor

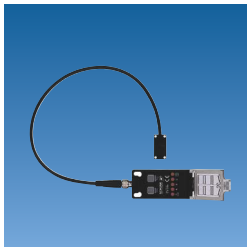

### Pressure maintenance valve



ⓘ For the exact size of the required accessories, availability of this size and the designation and ID, please refer to the additional views at the end of the size in question. You will find more detailed information on our accessory range in the “Accessories” catalog section.

## General note to the series

### Gripping moment

Gripping moment is the arithmetic total of gripping moments for each claw jaw.

### Finger length

The finger length is measured from the upper edge of the gripper housing in direction to the main axis. If the max. admissible finger length is exceeded, the speed of jaw motions have to be reduced and/or the opening angle has to be diminished, as it is done with heavy fingers. The service life of the gripper can shorten.

### Repeat accuracy

is defined as the spread of the limit position after 100 consecutive strokes.

### Workpiece weight

The recommended workpiece weight is calculated for a force-type connection with a coefficient of friction of 0.1 and a safety factor of 2 against slippage of the workpiece on acceleration due to gravity g. Considerably heavier workpiece weights are permitted with form-fit gripping.

### Closing and opening times

Closing and opening times are purely the times that the base jaws or fingers are in motion. Valve switching times, hose filling times or PLC reaction times are not included in the above times and must be taken into consideration when determining cycle times.

# PWG 65





## Gripping force, O.D. gripping

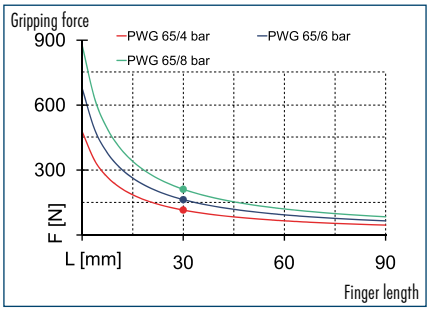


## Finger load

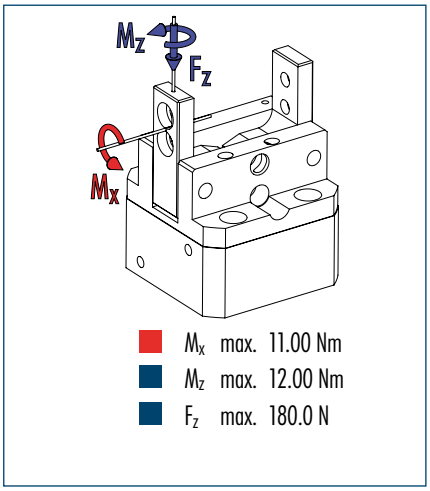


ⓘ The indicated moments and forces are statical values, apply for each base jaw and should not appear simultaneously. If the maximum admissible finger weight is exceeded, throttling is necessary in order to ensure a smooth jaw motion without jerks or bounces. The life-time may reduce.

## Technical data

| Description | | PWG 65-F | PWG 65-B |
|---|---|---|---|
| ID | | 0302630 | 0302631 |
| Opening angle per jaw | [°] | 20 | 20 |
| Closed angle per jaw up to | [°] | 4 | 4 |
| Closing moment | [Nm] | 6.44 | 6.44 |
| Spring-actuated closing moment | [Nm] | 1.7 | 1.7 |
| Weight | [kg] | 0.33 | 0.33 |
| Recommended workpiece weight | [kg] | 0.8 | 0.8 |
| Air consumption per double stroke | [cm³] | 8 | 8 |
| Min./max. operating pressure | [bar] | 4/8 | 4/8 |
| Nominal operating pressure | [bar] | 6 | 6 |
| Closing/opening time | [s] | 0.01/0.02 | 0.01/0.02 |
| Max. permitted finger length | [mm] | 60 | 60 |
| Max. permitted weight per finger | [kg] | 0.15 | 0.15 |
| IP class | | 20 | 20 |
| Min./max. ambient temperature | [°C] | -10/90 | -10/90 |
| Repeat accuracy | [mm] | 0.05 | 0.05 |

## Main view

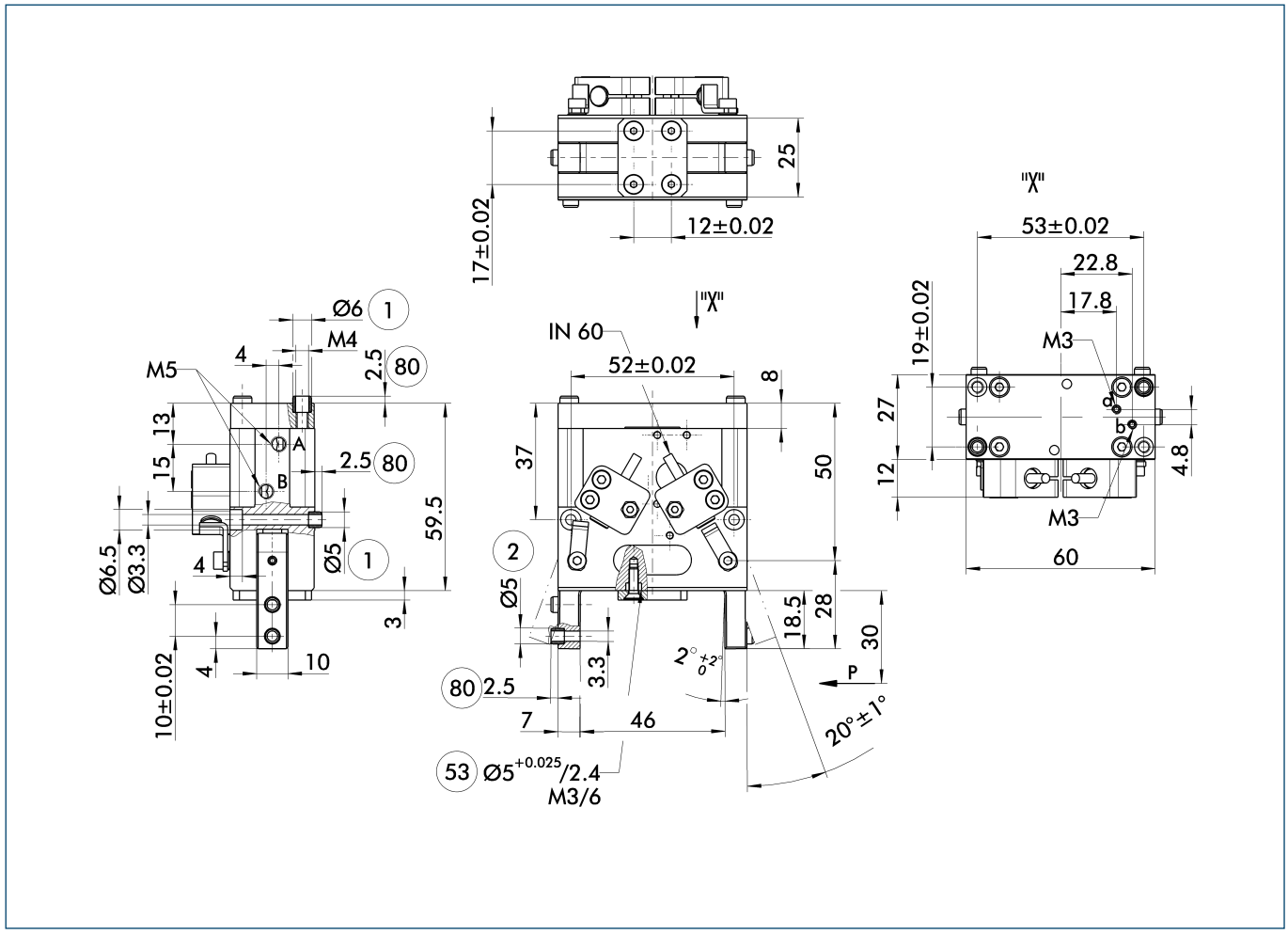


The drawing shows the gripper in the basic version with closed jaws, the dimensions do not include the options described below.

ⓘ The SDV-P pressure maintenance valve can be used to hold the position in case of pressure drop (see "Accessories" catalog section).

A, a Main/direct connection, gripper opening
B, b Main/direct connection, gripper closing
① Gripper connection
② Finger connection
53 Connection for shaft support
80 Depth of the centering sleeve hole in the matching part

## Hose-free direct connection

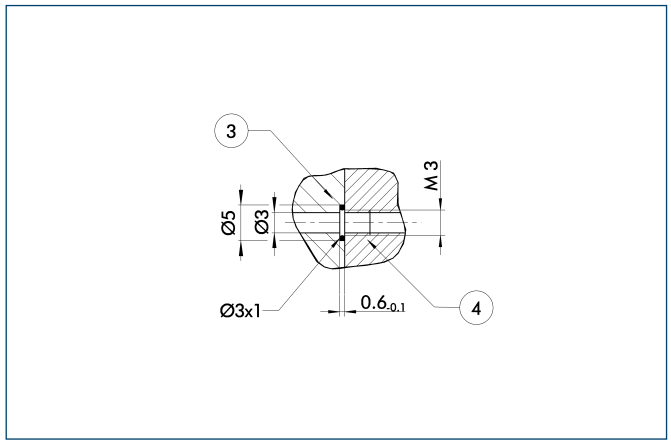


③ Adapter
④ Gripper

The direct connection is used for supplying compressed air without hoses. Instead, the pressure medium is fed through bore-holes in the mounting plate.

## Jaw version

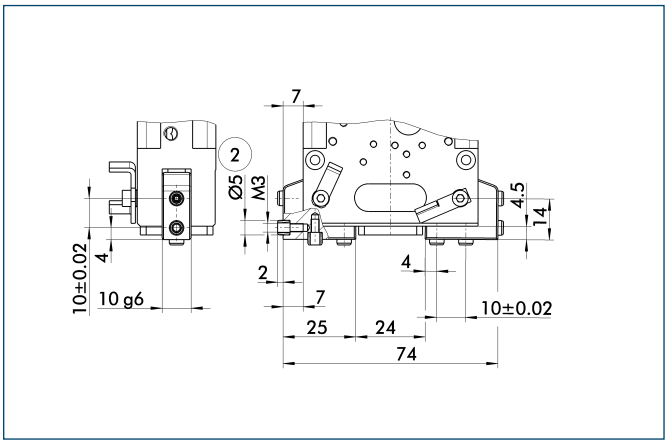


② Finger connection

Divergent dimensions of version "B" (jaw version)

## Shaft support

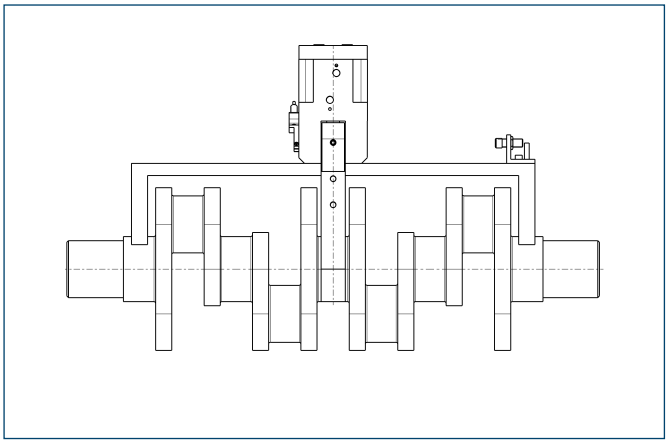

The complete assembly group for handling of cranks and cam shafts can be supplied on request.

## FPS Flexible Position Sensor

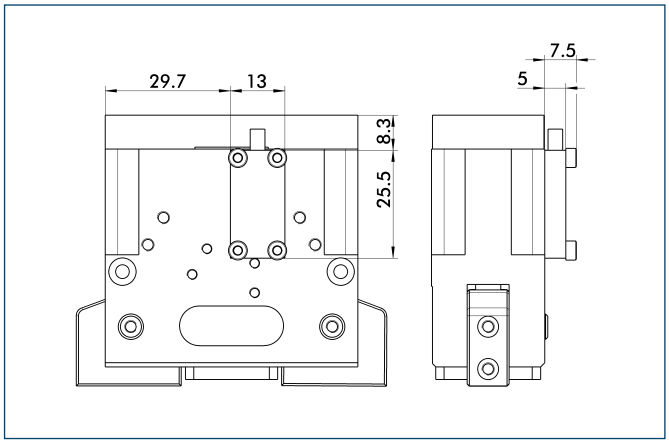


Up to three intermediate positions of the PWG can be monitored via the FPS flexible position sensor.

## Inductive proximity switches

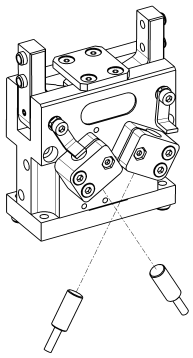

End position monitoring for direct mounting

| Description | ID | Recommended product |
|---|---|---|
| Inductive proximity switches | | |
| IN 60-S-M8 | **0301485** | • |
| IN 60-S-M12 | **0301585** | |
| INK 60-S | **0301553** | |
| Connection cables | | |
| KA BG08-L 3P-0300-PNP | **0301622** | |
| KA BG08-L 3P-0500-PNP | **0301623** | |
| KA BG12-L 3P-0500-PNP | **30016369** | |
| KA BW08-L 3P-0300-PNP | **0301594** | |
| KA BW08-L 3P-0500-PNP | **0301502** | |
| KA BW12-L 3P-0300-PNP | **0301503** | |
| KA BW12-L 3P-0500-PNP | **0301507** | |
| Cable extensions | | |
| KV BG12-SG12 3P-0030-PNP | **0301999** | |
| KV BG12-SG12 3P-0060-PNP | **0301998** | |
| KV BW08-SG08 3P-0030-PNP | **0301495** | |
| KV BW08-SG08 3P-0100-PNP | **0301496** | |
| KV BW08-SG08 3P-0200-PNP | **0301497** | |
| KV BW12-SG12 3P-0030-PNP | **0301595** | |
| KV BW12-SG12 3P-0100-PNP | **0301596** | |
| KV BW12-SG12 3P-0200-PNP | **0301597** | |

ⓘ Two sensors (closer/NO) are required for each gripper, plus extension cables as an option.

ⓘ Please note the minimum permitted bending radii for the sensor cables, which are generally 35 mm.

## Mounting kit for proximity switch

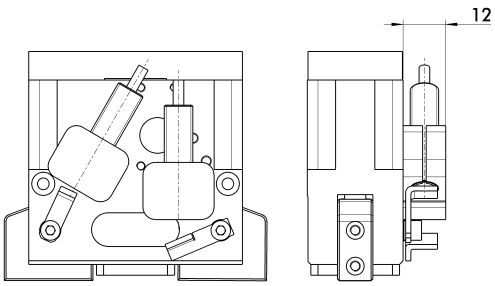


| Description | ID |
|---|---|
| Mounting kit for proximity switch | |
| HG-PWG 65 | **0300764** |

ⓘ This mounting kit needs to be ordered optionally as an accessory.

You can find more detailed information and individual parts of the above-mentioned accessories in the “Accessories” catalog section.

## Inductive proximity switches

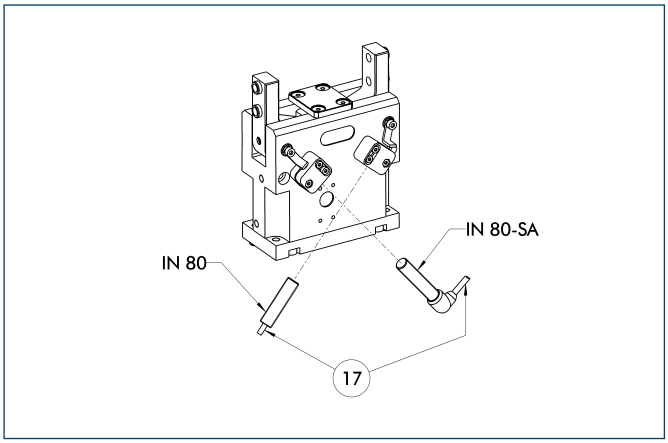


⑰ Cable outlet

End position monitoring mounted with mounting kit

| Description | ID | Recommended product |
|---|---|---|
| Mounting kit for proximity switch | | |
| HG-PWG 65 | **0300764** | |
| Inductive proximity switches | | |
| IN 80-S-M8 | **0301478** | • |
| IN 80-S-M12 | **0301578** | |
| INK 80-S | **0301550** | |
| IN-C 80-S-M8 | **0301475** | |
| INK 80-SL | **0301579** | |
| Inductive proximity switch with lateral outlet | | |
| IN 80-S-M12-SA | **0301587** | |
| IN 80-S-M8-SA | **0301483** | • |
| INK 80-S-SA | **0301566** | |

ⓘ Two sensors (closer/NO) are required for each gripper, plus extension cables as an option.
ⓘ This mounting kit needs to be ordered optionally as an accessory.
ⓘ Please note the minimum permitted bending radii for the sensor cables, which are generally 35 mm.

## Flexible Position Sensor

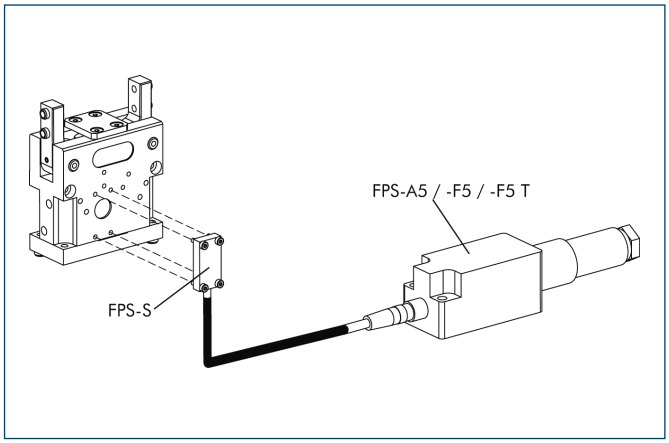


Flexible position monitoring of up to five positions

| Description | ID |
|---|---|
| Sensor | |
| FPS-S 13 | **0301705** |
| Electronic Processor | |
| FPS-F5 | **0301805** |
| FPS-F5 T | **0301807** |

ⓘ When using a FPS system, a FPS sensor (FPS-S) and a control unit (FPS-F5 / F5 T or A5) are required for each gripper as well as a mounting kit (AS), if listed. Cable extensions (KV) are available as options in the "Accessories" catalog section.

You can find more detailed information and individual parts of the above-mentioned accessories in the "Accessories" catalog section.

# PWG 90





## Gripping force, O.D. gripping

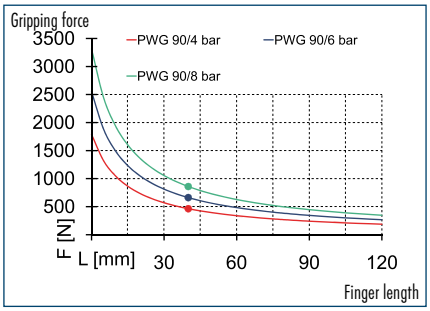


## Finger load

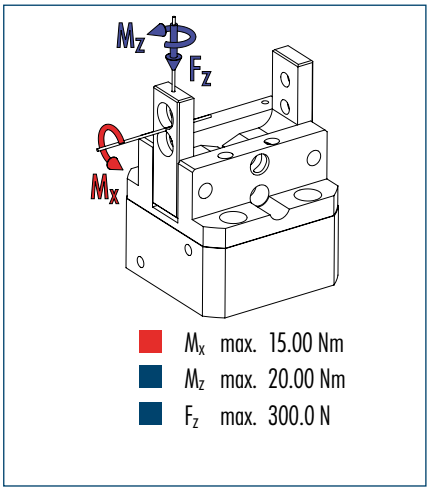


ⓘ The indicated moments and forces are statical values, apply for each base jaw and should not appear simultaneously. If the maximum admissible finger weight is exceeded, throttling is necessary in order to ensure a smooth jaw motion without jerks or bounces. The life-time may reduce.

## Technical data

| Description | | PWG 90-F | PWG 90-B |
|---|---|---|---|
| ID | | 0302632 | 0302633 |
| Opening angle per jaw | [°] | 20 | 20 |
| Closed angle per jaw up to | [°] | 4 | 4 |
| Closing moment | [Nm] | 35.69 | 35.69 |
| Spring-actuated closing moment | [Nm] | 9 | 9 |
| Weight | [kg] | 0.99 | 1.06 |
| Recommended workpiece weight | [kg] | 3.3 | 3.3 |
| Air consumption per double stroke | [cm³] | 35 | 35 |
| Min./max. operating pressure | [bar] | 4/8 | 4/8 |
| Nominal operating pressure | [bar] | 6 | 6 |
| Closing/opening time | [s] | 0.03/0.06 | 0.03/0.06 |
| Max. permitted finger length | [mm] | 80 | 80 |
| Max. permitted weight per finger | [kg] | 0.5 | 0.5 |
| IP class | | 20 | 20 |
| Min./max. ambient temperature | [°C] | -10/90 | -10/90 |
| Repeat accuracy | [mm] | 0.05 | 0.05 |

## Main view

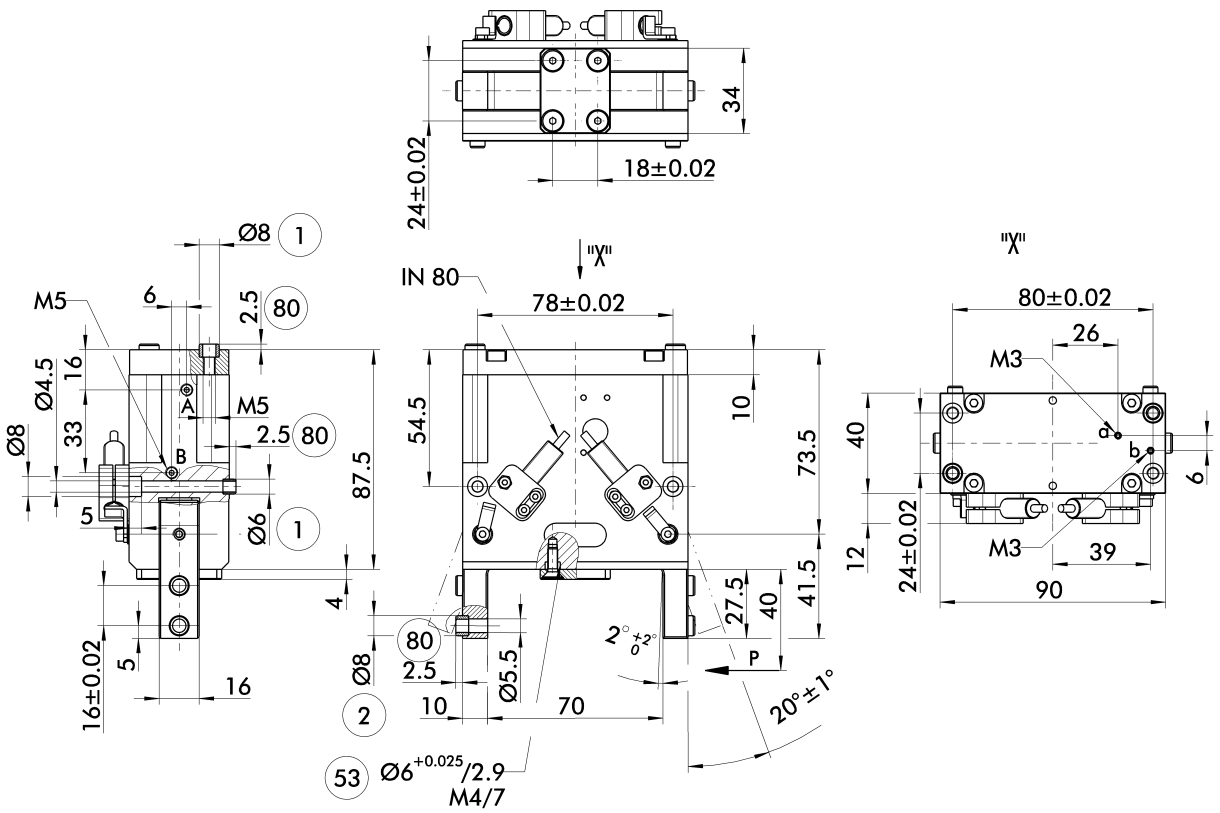


The drawing shows the gripper in the basic version with closed jaws, the dimensions do not include the options described below.

ⓘ The SDV-P pressure maintenance valve can be used to hold the position in case of pressure drop (see "Accessories" catalog section).

A, a Main/direct connection, gripper opening
B, b Main/direct connection, gripper closing
① Gripper connection
② Finger connection
53 Connection for shaft support
80 Depth of the centering sleeve hole in the matching part

## Hose-free direct connection

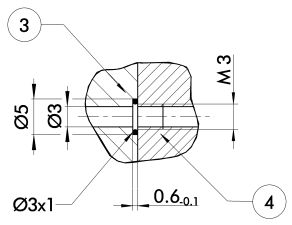


③ Adapter
④ Gripper

The direct connection is used for supplying compressed air without hoses. Instead, the pressure medium is fed through bore-holes in the mounting plate.

## Jaw version

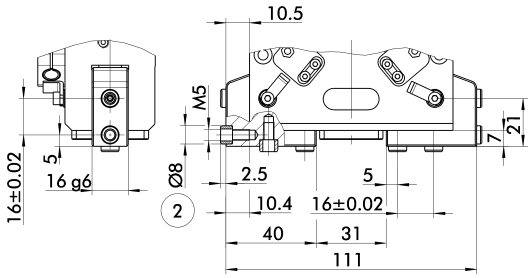


② Finger connection

Divergent dimensions of version "B" (jaw version)

## Shaft support

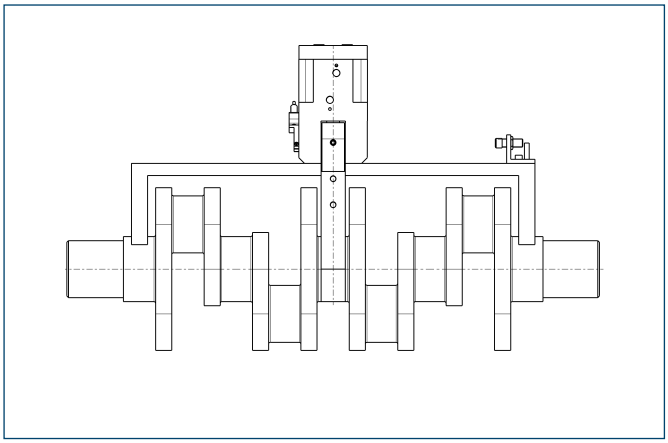

The complete assembly group for handling of cranks and cam shafts can be supplied on request.

## Flexible Position Sensor

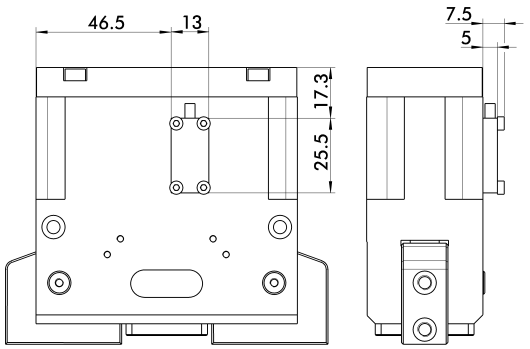


Up to three intermediate positions of the PWG can be monitored via the FPS flexible position sensor.

## Inductive proximity switches

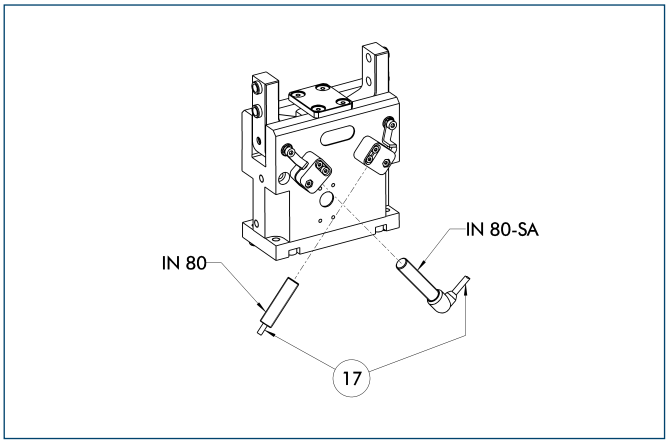


⑰ Cable outlet

End position monitoring for direct mounting

| Description | ID | Recommended product |
|---|---|---|
| Inductive proximity switches | | |
| IN 80-S-M8 | **0301478** | • |
| IN 80-S-M12 | **0301578** | |
| INK 80-S | **0301550** | |
| IN-C 80-S-M8 | **0301475** | |
| Inductive proximity switch with lateral outlet | | |
| IN 80-S-M12-SA | **0301587** | |
| IN 80-S-M8-SA | **0301483** | • |
| INK 80-S-SA | **0301566** | |
| Connection cables | | |
| KA BG08-L 3P-0300-PNP | **0301622** | |
| KA BG08-L 3P-0500-PNP | **0301623** | |
| KA BG12-L 3P-0500-PNP | **30016369** | |
| KA BW08-L 3P-0300-PNP | **0301594** | |
| KA BW08-L 3P-0500-PNP | **0301502** | |
| KA BW12-L 3P-0300-PNP | **0301503** | |
| KA BW12-L 3P-0500-PNP | **0301507** | |
| Cable extensions | | |
| KV BG12-SG12 3P-0030-PNP | **0301999** | |
| KV BG12-SG12 3P-0060-PNP | **0301998** | |
| KV BW08-SG08 3P-0030-PNP | **0301495** | |
| KV BW08-SG08 3P-0100-PNP | **0301496** | |
| KV BW08-SG08 3P-0200-PNP | **0301497** | |
| KV BW12-SG12 3P-0030-PNP | **0301595** | |
| KV BW12-SG12 3P-0100-PNP | **0301596** | |
| KV BW12-SG12 3P-0200-PNP | **0301597** | |

ⓘ Two sensors (closer/NO) are required for each gripper, plus extension cables as an option.

ⓘ Please note the minimum permitted bending radii for the sensor cables, which are generally 35 mm.

## Flexible Position Sensor

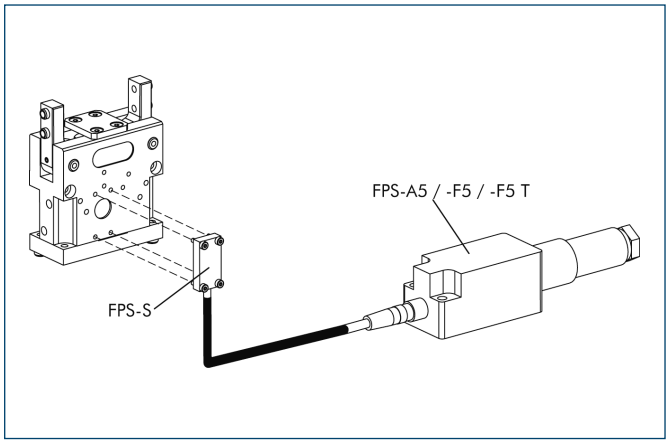


Flexible position monitoring of up to five positions

| Description | ID |
|---|---|
| Sensor | |
| FPS-S 13 | **0301705** |
| Electronic Processor | |
| FPS-F5 | **0301805** |
| FPS-F5 T | **0301807** |

ⓘ When using a FPS system, a FPS sensor (FPS-S) and a control unit (FPS-F5 / F5 T or A5) are required for each gripper as well as a mounting kit (AS), if listed. Cable extensions (KV) are available as options in the “Accessories” catalog section.

You can find more detailed information and individual parts of the above-mentioned accessories in the “Accessories” catalog section.

# PWG 130





## Gripping force, O.D. gripping

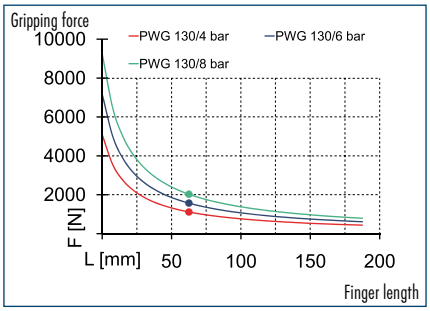


## Finger load

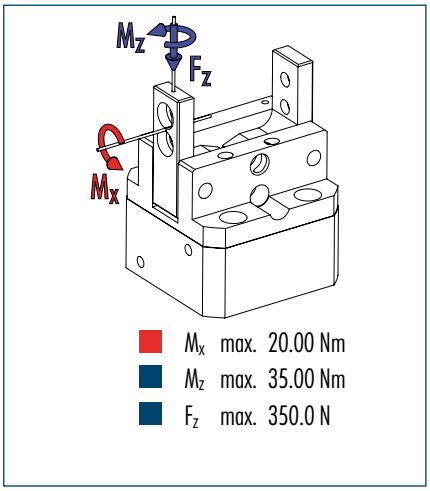


ⓘ The indicated moments and forces are statical values, apply for each base jaw and should not appear simultaneously. If the maximum admissible finger weight is exceeded, throttling is necessary in order to ensure a smooth jaw motion without jerks or bounces. The life-time may reduce.

## Technical data

| Description | | PWG 130-F | PWG 130-B |
|---|---|---|---|
| ID | | 0302634 | 0302635 |
| Opening angle per jaw | [°] | 20 | 20 |
| Closed angle per jaw up to | [°] | 4 | 4 |
| Closing moment | [Nm] | 125.4 | 125.4 |
| Spring-actuated closing moment | [Nm] | 34.2 | 34.2 |
| Weight | [kg] | 2.6 | 2.8 |
| Recommended workpiece weight | [kg] | 8 | 8 |
| Air consumption per double stroke | [cm³] | 120 | 120 |
| Min./max. operating pressure | [bar] | 4/8 | 4/8 |
| Nominal operating pressure | [bar] | 6 | 6 |
| Closing/opening time | [s] | 0.1/0.19 | 0.1/0.19 |
| Max. permitted finger length | [mm] | 125 | 125 |
| Max. permitted weight per finger | [kg] | 1 | 1 |
| IP class | | 20 | 20 |
| Min./max. ambient temperature | [°C] | -10/90 | -10/90 |
| Repeat accuracy | [mm] | 0.05 | 0.05 |

## Main view

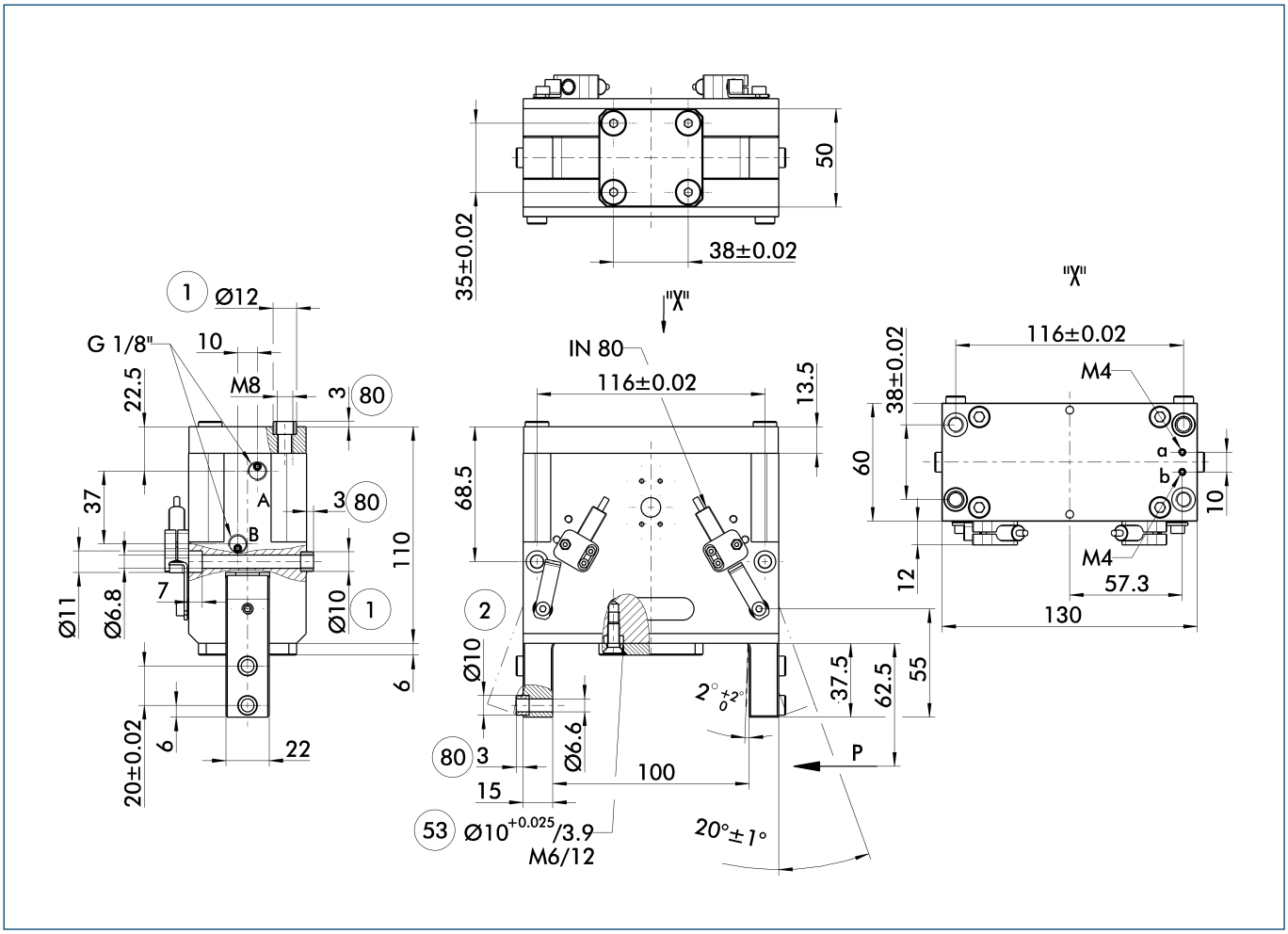


The drawing shows the gripper in the basic version with closed jaws, the dimensions do not include the options described below.

ⓘ The SDV-P pressure maintenance valve can be used to hold the position in case of pressure drop (see "Accessories" catalog section).

A, a Main/direct connection, gripper opening
B, b Main/direct connection, gripper closing
① Gripper connection
② Finger connection
53 Connection for shaft support
80 Depth of the centering sleeve hole in the matching part

## Hose-free direct connection

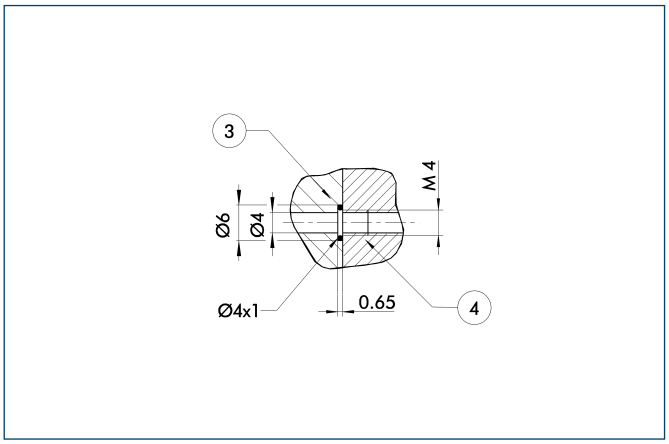


③ Adapter
④ Gripper

The direct connection is used for supplying compressed air without hoses. Instead, the pressure medium is fed through bore-holes in the mounting plate.

## Jaw version

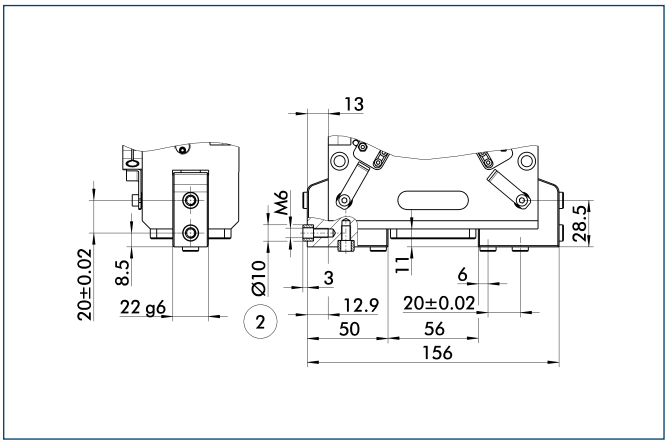


② Finger connection

Divergent dimensions of version "B" (jaw version)

## Shaft support

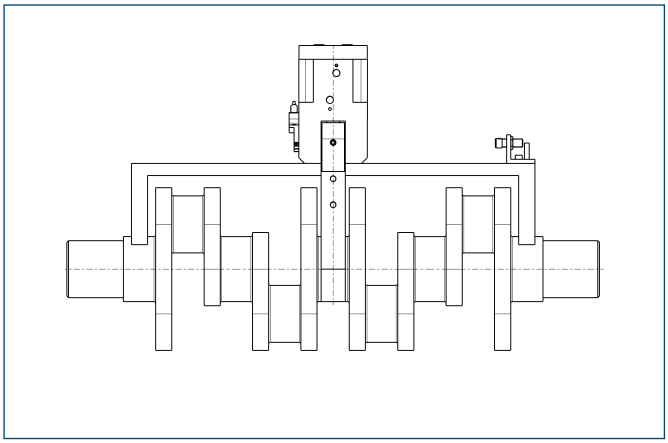

The complete assembly group for handling of cranks and cam shafts can be supplied on request.

## Flexible Position Sensor

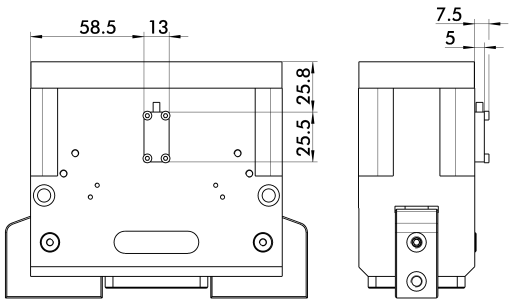


Up to three intermediate positions of the PWG can be monitored via the FPS flexible position sensor.

## Inductive proximity switches

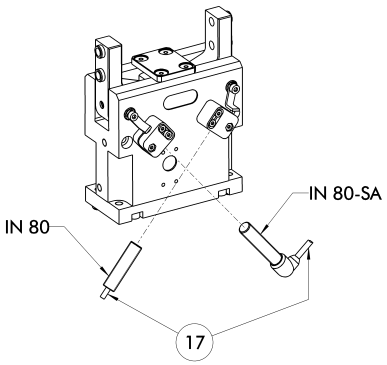


⑰ Cable outlet

End position monitoring for direct mounting

| Description | ID | Recommended product |
|---|---|---|
| Inductive proximity switches | | |
| IN 80-S-M8 | **0301478** | • |
| IN 80-S-M12 | **0301578** | |
| INK 80-S | **0301550** | |
| IN-C 80-S-M8 | **0301475** | |
| Inductive proximity switch with lateral outlet | | |
| IN 80-S-M12-SA | **0301587** | |
| IN 80-S-M8-SA | **0301483** | • |
| INK 80-S-SA | **0301566** | |
| Connection cables | | |
| KA BG08-L 3P-0300-PNP | **0301622** | |
| KA BG08-L 3P-0500-PNP | **0301623** | |
| KA BG12-L 3P-0500-PNP | **30016369** | |
| KA BW08-L 3P-0300-PNP | **0301594** | |
| KA BW08-L 3P-0500-PNP | **0301502** | |
| KA BW12-L 3P-0300-PNP | **0301503** | |
| KA BW12-L 3P-0500-PNP | **0301507** | |
| Cable extensions | | |
| KV BG12-SG12 3P-0030-PNP | **0301999** | |
| KV BG12-SG12 3P-0060-PNP | **0301998** | |
| KV BW08-SG08 3P-0030-PNP | **0301495** | |
| KV BW08-SG08 3P-0100-PNP | **0301496** | |
| KV BW08-SG08 3P-0200-PNP | **0301497** | |
| KV BW12-SG12 3P-0030-PNP | **0301595** | |
| KV BW12-SG12 3P-0100-PNP | **0301596** | |
| KV BW12-SG12 3P-0200-PNP | **0301597** | |

ⓘ Two sensors (closer/NO) are required for each gripper, plus extension cables as an option.

ⓘ Please note the minimum permitted bending radii for the sensor cables, which are generally 35 mm.

## Mounting kit for proximity switch

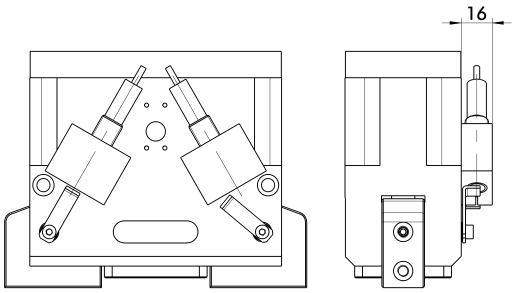


| Description | ID |
|---|---|
| Mounting kit for proximity switch | |
| HG-PWG 130-230 | **0300763** |

ⓘ This mounting kit needs to be ordered optionally as an accessory.

ⓘ The proximity switches must be ordered separately.

You can find more detailed information and individual parts of the above-mentioned accessories in the “Accessories” catalog section.

## Inductive proximity switches

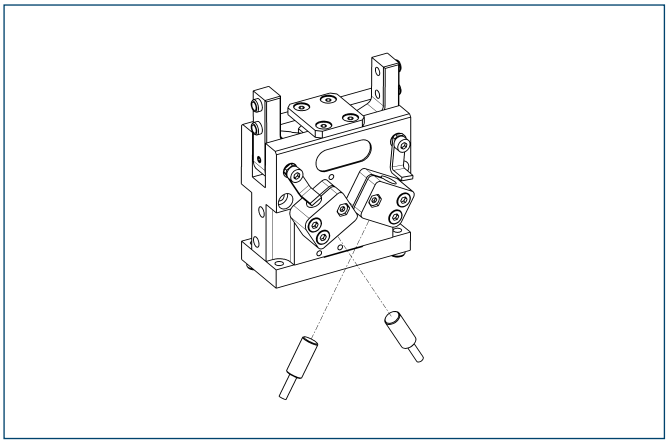

End position monitoring mounted with mounting kit

| Description | ID | Recommended product |
|---|---|---|
| Mounting kit for proximity switch | | |
| HG-PWG 130-230 | **0300763** | |
| Inductive proximity switches | | |
| IN 120-S-M12 | **0301592** | • |
| INK 120-S | **0301562** | |

ⓘ Two sensors (closer/NO) are required for each gripper, plus extension cables as an option.

ⓘ This mounting kit needs to be ordered optionally as an accessory.

ⓘ Please note the minimum permitted bending radii for the sensor cables, which are generally 35 mm.

## Flexible Position Sensor

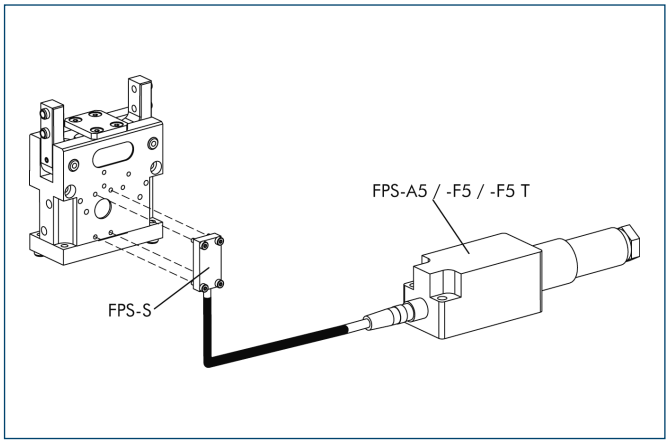


Flexible position monitoring of up to five positions

| Description | ID |
|---|---|
| Sensor | |
| FPS-S 13 | **0301705** |
| Electronic Processor | |
| FPS-F5 | **0301805** |
| FPS-F5 T | **0301807** |

ⓘ When using a FPS system, a FPS sensor (FPS-S) and a control unit (FPS-F5 / F5 T or A5) are required for each gripper as well as a mounting kit (AS), if listed. Cable extensions (KV) are available as options in the “Accessories” catalog section.

You can find more detailed information and individual parts of the above-mentioned accessories in the “Accessories” catalog section.

# PWG 170





## Gripping force, O.D. gripping

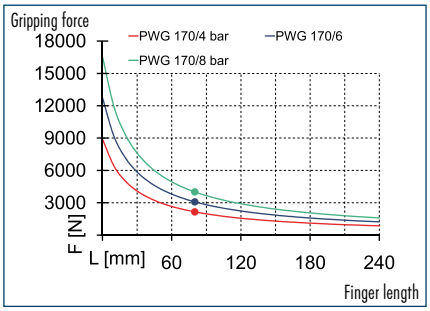


## Finger load

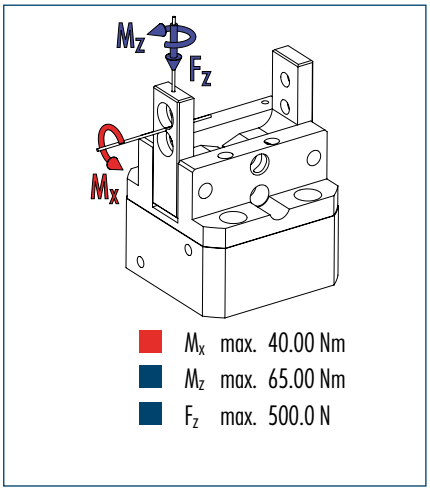


ⓘ The indicated moments and forces are statical values, apply for each base jaw and should not appear simultaneously. If the maximum admissible finger weight is exceeded, throttling is necessary in order to ensure a smooth jaw motion without jerks or bounces. The life-time may reduce.

## Technical data

| Description | | PWG 170-F | PWG 170-B |
|---|---|---|---|
| **ID** | | **0302636** | **0302637** |
| Opening angle per jaw | [°] | 20 | 20 |
| Closed angle per jaw up to | [°] | 4 | 4 |
| Closing moment | [Nm] | 324.9 | 324.9 |
| Spring-actuated closing moment | [Nm] | 80.4 | 80.4 |
| Weight | [kg] | 6.6 | 7 |
| Recommended workpiece weight | [kg] | 15.7 | 15.7 |
| Air consumption per double stroke | [cm³] | 320 | 320 |
| Min./max. operating pressure | [bar] | 4/8 | 4/8 |
| Nominal operating pressure | [bar] | 6 | 6 |
| Closing/opening time | [s] | 0.27/0.3 | 0.27/0.3 |
| Max. permitted finger length | [mm] | 160 | 160 |
| Max. permitted weight per finger | [kg] | 2.5 | 2.5 |
| IP class | | 20 | 20 |
| Min./max. ambient temperature | [°C] | -10/90 | -10/90 |
| Repeat accuracy | [mm] | 0.05 | 0.05 |

## Main view

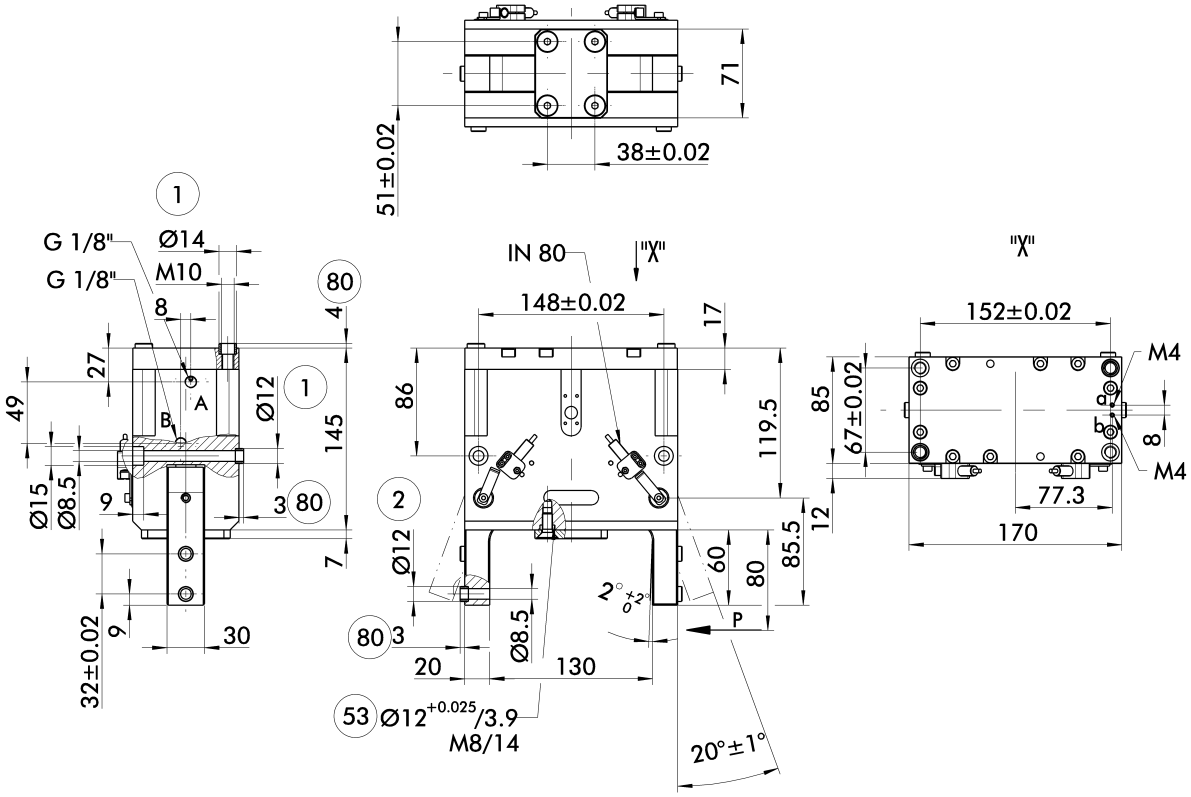


The drawing shows the gripper in the basic version with closed jaws, the dimensions do not include the options described below.

ⓘ The SDV-P pressure maintenance valve can be used to hold the position in case of pressure drop (see "Accessories" catalog section).

A, a Main/direct connection, gripper opening
B, b Main/direct connection, gripper closing
① Gripper connection
② Finger connection
53 Connection for shaft support
80 Depth of the centering sleeve hole in the matching part

## Hose-free direct connection

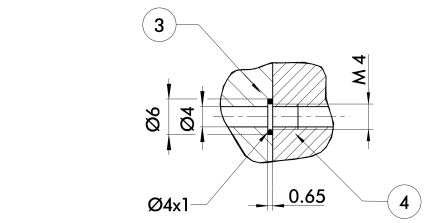


③ Adapter
④ Gripper

The direct connection is used for supplying compressed air without hoses. Instead, the pressure medium is fed through bore-holes in the mounting plate.

## Jaw version

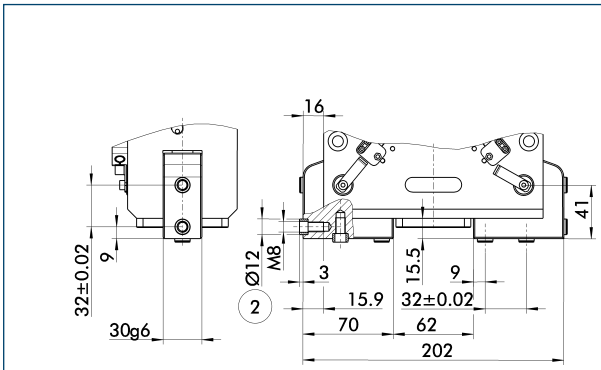


② Finger connection

Divergent dimensions of version "B" (jaw version)

## Shaft support

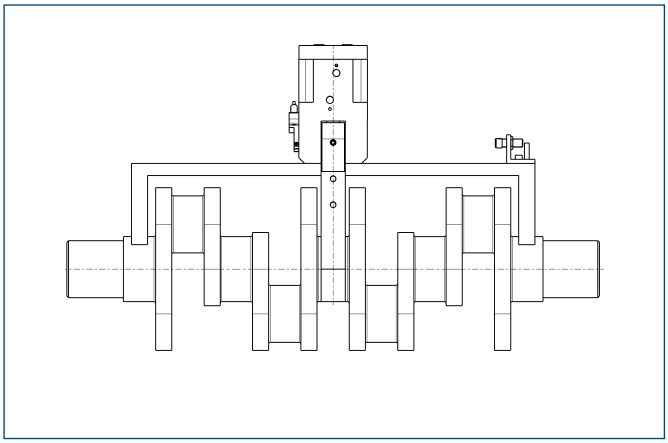

The complete assembly group for handling of cranks and cam shafts can be supplied on request.

## Flexible Position Sensor

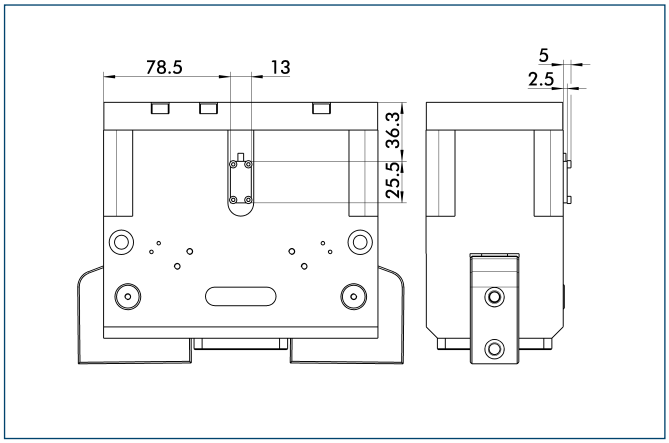


Up to three intermediate positions of the PWG can be monitored via the FPS flexible position sensor.

## Inductive proximity switches

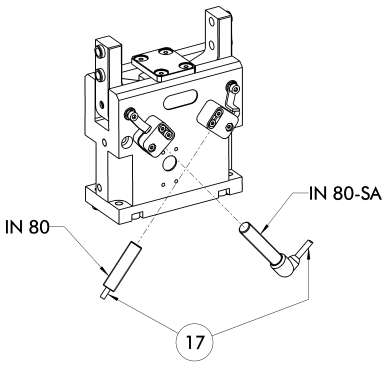


⑰ Cable outlet

End position monitoring for direct mounting

| Description | ID | Recommended product |
|---|---|---|
| Inductive proximity switches | | |
| IN 80-S-M8 | **0301478** | • |
| IN 80-S-M12 | **0301578** | |
| INK 80-S | **0301550** | |
| IN-C 80-S-M8 | **0301475** | |
| Inductive proximity switch with lateral outlet | | |
| IN 80-S-M12-SA | **0301587** | |
| IN 80-S-M8-SA | **0301483** | • |
| INK 80-S-SA | **0301566** | |
| Connection cables | | |
| KA BG08-L 3P-0300-PNP | **0301622** | |
| KA BG08-L 3P-0500-PNP | **0301623** | |
| KA BG12-L 3P-0500-PNP | **30016369** | |
| KA BW08-L 3P-0300-PNP | **0301594** | |
| KA BW08-L 3P-0500-PNP | **0301502** | |
| KA BW12-L 3P-0300-PNP | **0301503** | |
| KA BW12-L 3P-0500-PNP | **0301507** | |
| Cable extensions | | |
| KV BG12-SG12 3P-0030-PNP | **0301999** | |
| KV BG12-SG12 3P-0060-PNP | **0301998** | |
| KV BW08-SG08 3P-0030-PNP | **0301495** | |
| KV BW08-SG08 3P-0100-PNP | **0301496** | |
| KV BW08-SG08 3P-0200-PNP | **0301497** | |
| KV BW12-SG12 3P-0030-PNP | **0301595** | |
| KV BW12-SG12 3P-0100-PNP | **0301596** | |
| KV BW12-SG12 3P-0200-PNP | **0301597** | |

ⓘ Two sensors (closer/NO) are required for each gripper, plus extension cables as an option.

ⓘ Please note the minimum permitted bending radii for the sensor cables, which are generally 35 mm.

## Mounting kit for proximity switch

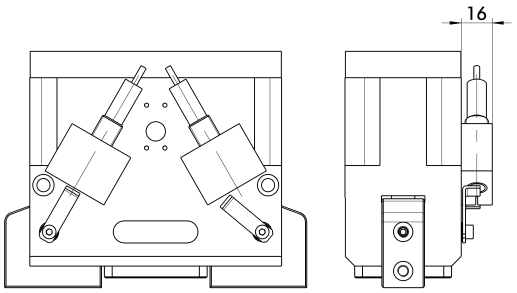


| Description | ID |
|---|---|
| Mounting kit for proximity switch | |
| HG-PWG 130-230 | **0300763** |

ⓘ This mounting kit needs to be ordered optionally as an accessory.

ⓘ The proximity switches must be ordered separately.

You can find more detailed information and individual parts of the above-mentioned accessories in the “Accessories” catalog section.

## Inductive proximity switches

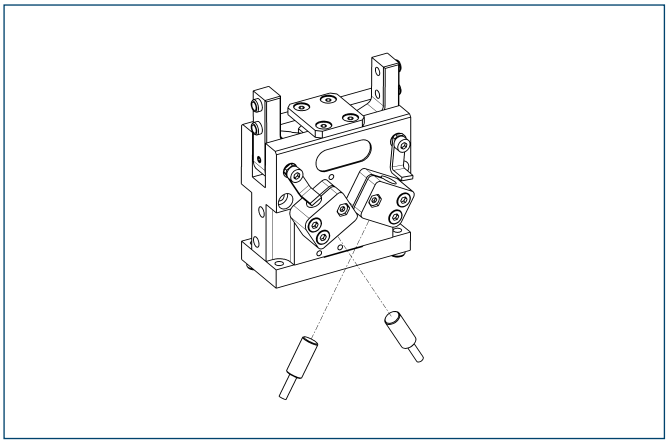

End position monitoring mounted with mounting kit

| Description | ID | Recommended product |
|---|---|---|
| Mounting kit for proximity switch | | |
| HG-PWG 130-230 | **0300763** | |
| Inductive proximity switches | | |
| IN 120-S-M12 | **0301592** | • |
| INK 120-S | **0301562** | |

ⓘ Two sensors (closer/NO) are required for each gripper, plus extension cables as an option.
ⓘ This mounting kit needs to be ordered optionally as an accessory.
ⓘ Please note the minimum permitted bending radii for the sensor cables, which are generally 35 mm.

## Flexible Position Sensor

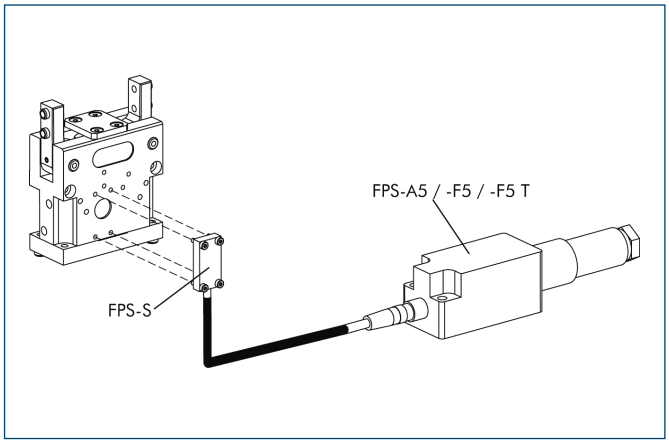


Flexible position monitoring of up to five positions

| Description | ID |
|---|---|
| Sensor | |
| FPS-S 13 | **0301705** |
| Electronic Processor | |
| FPS-F5 | **0301805** |
| FPS-F5 T | **0301807** |

ⓘ When using a FPS system, a FPS sensor (FPS-S) and a control unit (FPS-F5 / F5 T or A5) are required for each gripper as well as a mounting kit (AS), if listed. Cable extensions (KV) are available as options in the “Accessories” catalog section.

You can find more detailed information and individual parts of the above-mentioned accessories in the “Accessories” catalog section.

# PWG 230





## Gripping force, O.D. gripping

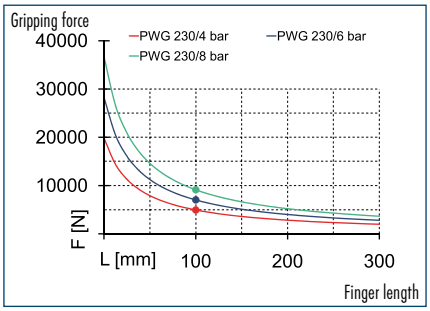


## Finger load

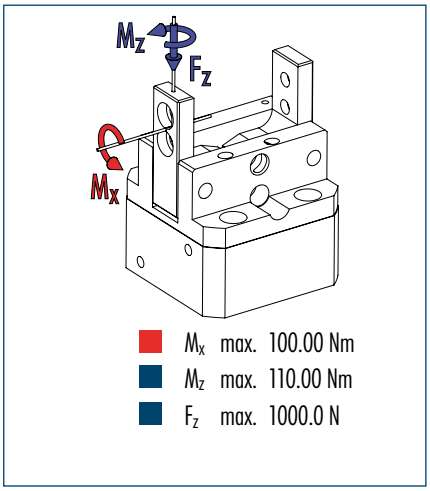


ⓘ The indicated moments and forces are statical values, apply for each base jaw and should not appear simultaneously. If the maximum admissible finger weight is exceeded, throttling is necessary in order to ensure a smooth jaw motion without jerks or bounces. The life-time may reduce.

## Technical data

| Description | | PWG 230-F | PWG 230-B |
|---|---|---|---|
| ID | | 0302638 | 0302639 |
| Opening angle per jaw | [°] | 20 | 20 |
| Closed angle per jaw up to | [°] | 4 | 4 |
| Closing moment | [Nm] | 934.2 | 934.2 |
| Spring-actuated closing moment | [Nm] | 237.6 | 237.6 |
| Weight | [kg] | 15.8 | 16.3 |
| Recommended workpiece weight | [kg] | 35.8 | 35.8 |
| Air consumption per double stroke | [cm³] | 860 | 860 |
| Min./max. operating pressure | [bar] | 4/8 | 4/8 |
| Nominal operating pressure | [bar] | 6 | 6 |
| Closing/opening time | [s] | 0.35/0.45 | 0.35/0.45 |
| Max. permitted finger length | [mm] | 200 | 200 |
| Max. permitted weight per finger | [kg] | 4 | 4 |
| IP class | | 20 | 20 |
| Min./max. ambient temperature | [°C] | -10/90 | -10/90 |
| Repeat accuracy | [mm] | 0.05 | 0.05 |

## Main view

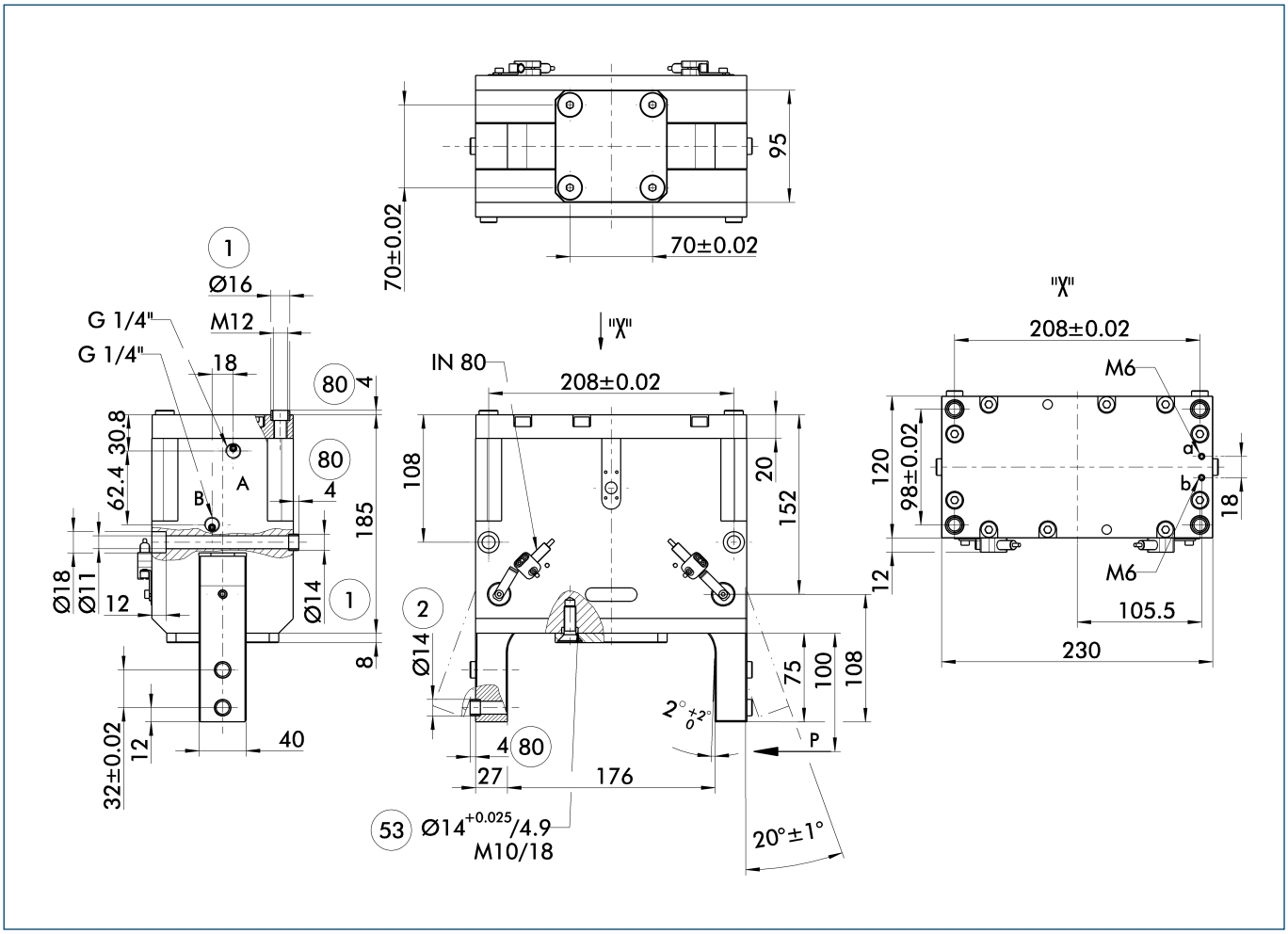


The drawing shows the gripper in the basic version with closed jaws, the dimensions do not include the options described below.

ⓘ The SDV-P pressure maintenance valve can be used to hold the position in case of pressure drop (see "Accessories" catalog section).

A, a Main/direct connection, gripper opening
B, b Main/direct connection, gripper closing
① Gripper connection
② Finger connection
53 Connection for shaft support
80 Depth of the centering sleeve hole in the matching part

## Hose-free direct connection

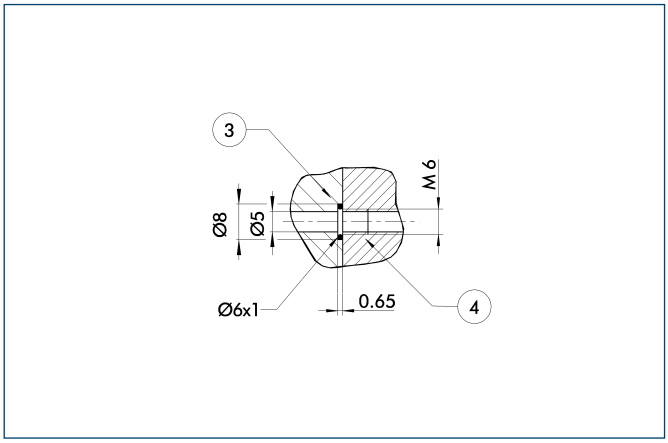


③ Adapter
④ Gripper

The direct connection is used for supplying compressed air without hoses. Instead, the pressure medium is fed through bore-holes in the mounting plate.

## Jaw version

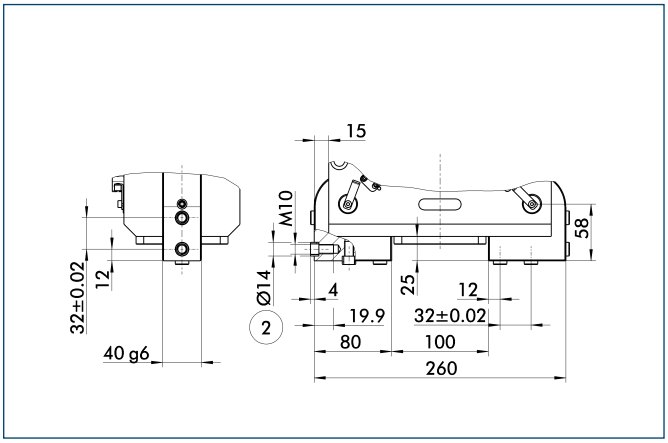


② Finger connection

Divergent dimensions of version "B" (jaw version)

## Shaft support

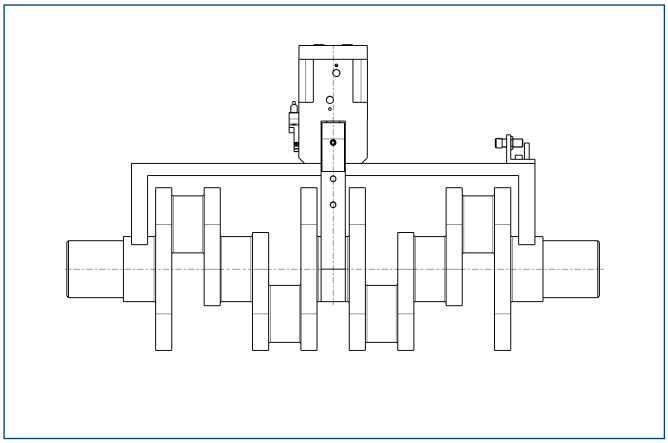

The complete assembly group for handling of cranks and cam shafts can be supplied on request.

## Flexible Position Sensor

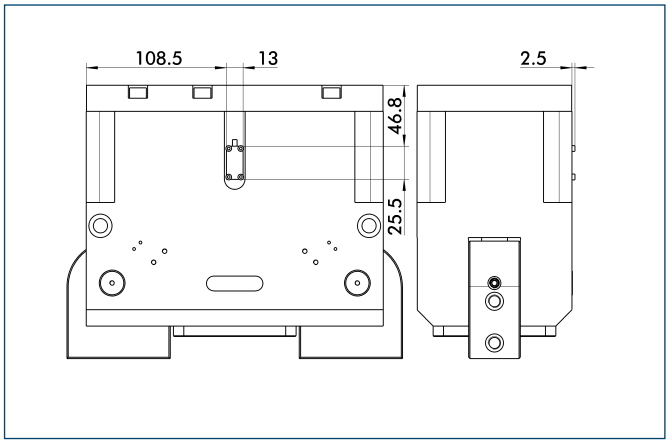


Up to three intermediate positions of the PWG can be monitored via the FPS flexible position sensor.

## Inductive proximity switches

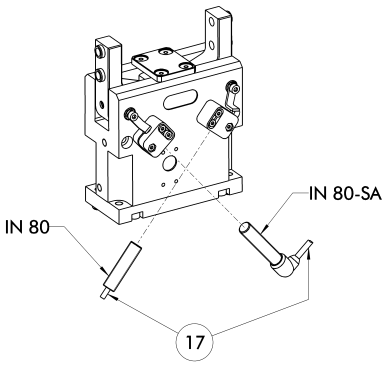


⑰ Cable outlet

End position monitoring for direct mounting

| Description | ID | Recommended product |
|---|---|---|
| Inductive proximity switches | | |
| IN 80-S-M8 | **0301478** | • |
| IN 80-S-M12 | **0301578** | |
| INK 80-S | **0301550** | |
| IN-C 80-S-M8 | **0301475** | |
| Inductive proximity switch with lateral outlet | | |
| IN 80-S-M12-SA | **0301587** | |
| IN 80-S-M8-SA | **0301483** | • |
| INK 80-S-SA | **0301566** | |
| Connection cables | | |
| KA BG08-L 3P-0300-PNP | **0301622** | |
| KA BG08-L 3P-0500-PNP | **0301623** | |
| KA BG12-L 3P-0500-PNP | **30016369** | |
| KA BW08-L 3P-0300-PNP | **0301594** | |
| KA BW08-L 3P-0500-PNP | **0301502** | |
| KA BW12-L 3P-0300-PNP | **0301503** | |
| KA BW12-L 3P-0500-PNP | **0301507** | |
| Cable extensions | | |
| KV BG12-SG12 3P-0030-PNP | **0301999** | |
| KV BG12-SG12 3P-0060-PNP | **0301998** | |
| KV BW08-SG08 3P-0030-PNP | **0301495** | |
| KV BW08-SG08 3P-0100-PNP | **0301496** | |
| KV BW08-SG08 3P-0200-PNP | **0301497** | |
| KV BW12-SG12 3P-0030-PNP | **0301595** | |
| KV BW12-SG12 3P-0100-PNP | **0301596** | |
| KV BW12-SG12 3P-0200-PNP | **0301597** | |

ⓘ Two sensors (closer/NO) are required for each gripper, plus extension cables as an option.

ⓘ Please note the minimum permitted bending radii for the sensor cables, which are generally 35 mm.

## Mounting kit for proximity switch

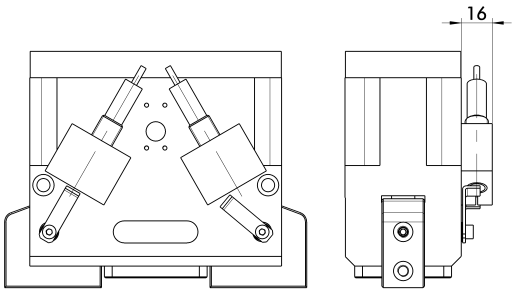


| Description | ID |
|---|---|
| Mounting kit for proximity switch | |
| HG-PWG 130-230 | **0300763** |

ⓘ This mounting kit needs to be ordered optionally as an accessory.

ⓘ The proximity switches must be ordered separately.

You can find more detailed information and individual parts of the above-mentioned accessories in the “Accessories” catalog section.

## Inductive proximity switches

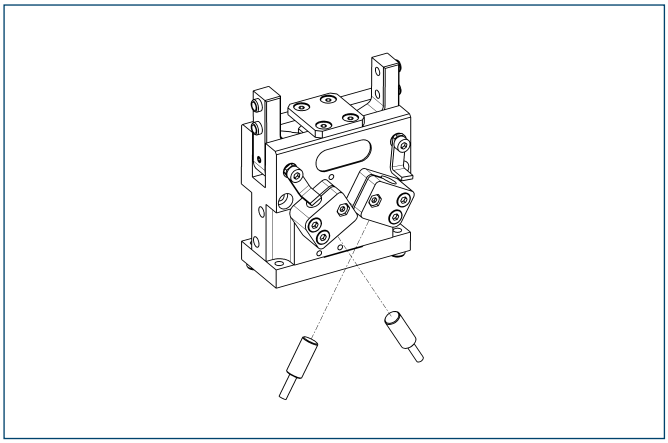

End position monitoring mounted with mounting kit

| Description | ID | Recommended product |
|---|---|---|
| Mounting kit for proximity switch | | |
| HG-PWG 130-230 | **0300763** | |
| Inductive proximity switches | | |
| IN 120-S-M12 | **0301592** | • |
| INK 120-S | **0301562** | |

ⓘ Two sensors (closer/NO) are required for each gripper, plus extension cables as an option.
ⓘ This mounting kit needs to be ordered optionally as an accessory.
ⓘ Please note the minimum permitted bending radii for the sensor cables, which are generally 35 mm.

## Flexible Position Sensor

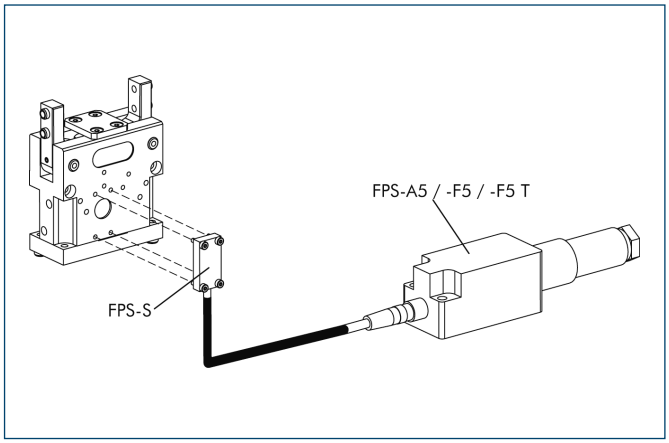


Flexible position monitoring of up to five positions

| Description | ID |
|---|---|
| Sensor | |
| FPS-S 13 | **0301705** |
| Electronic Processor | |
| FPS-F5 | **0301805** |
| FPS-F5 T | **0301807** |

ⓘ When using a FPS system, a FPS sensor (FPS-S) and a control unit (FPS-F5 / F5 T or A5) are required for each gripper as well as a mounting kit (AS), if listed. Cable extensions (KV) are available as options in the “Accessories” catalog section.

You can find more detailed information and individual parts of the above-mentioned accessories in the “Accessories” catalog section.

# Pneumatic Gripping Modules

## Pneumatic • 3-Finger Angular Gripper



3-FINGER ANGULAR GRIPPER


| Series | Size | Page |
|---|---|---|
| **Angular Gripper for small components** | | |
| SGW | | 996 |
| SGW | 40 | 1000 |
| SGW | 50 | 1004 |
| SGW | 64 | 1008 |

# SGW

**Pneumatic • 3-Finger Concentric Gripper • Angular Gripper for small components**

**Sizes**
40 ... 64

**Weight**
0.05 kg ... 0.17 kg

**Gripping moment**
1.35 Nm ... 7.45 Nm

**Angle per jaw**
8°

**Workpiece weight**
0.3 kg ... 1.3 kg

## Application example




**Linear unit with 6-fold gripper for simultaneous handling of six smaller packages**

1. 3-Finger Centric Gripper SGW
2. Linear axis with toothed-belt drive HSB Beta

## Angular Gripper for small components

small, plastic angular gripper with spring return and single-acting piston

## Field of application

for universal use in clean and slightly dirty environments, with special requirements for the corrosion resistance and antistatic properties of the gripper unit

## Your advantages and benefits

**Housing of carbon-fiber-reinforced plastic**
making the gripper extremely light and free from corrosion

**One-way acting 3-fold piston with lever gear**
for high power transmission and synchronized gripping

**Spring-loaded pressure piece**
for optional pressing and separating of workpieces

**favorable in price**
especially suitable for low-budget applications




## General note to the series

**Principle of function**
one-way acting 3-fold piston with lever gear and spring reset

**Housing material**
carbon-fiber-reinforced plastic with metal functional parts

**Base jaw material**
carbon-fiber-reinforced plastic

**Actuation**
pneumatic, with filtered compressed air (10 microns): dry, lubricated or non-lubricated
Pressure medium: Required quality class of compressed air according to DIN ISO 8573-1: 6 4 4

**Warranty**
24 months (details, general terms and conditions and operation manuals can be downloaded under www.schunk.com)

**Scope of delivery**
Centering pins, O-rings for direct connection, assembly and operating manual with manufacturer's declaration

**Gripping force maintenance device**
possible with SDV-P pressure maintenance valve

## Sectional diagram

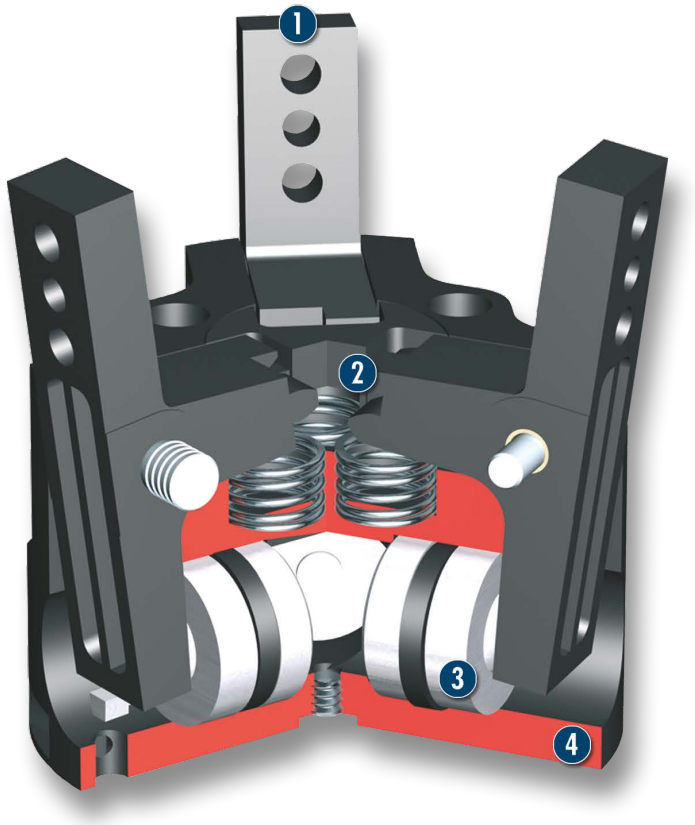


1 **Base jaw**
for the connection of workpiece-specific gripper fingers

2 **Lever mechanism**
for precise and synchronized gripping

3 **Drive**
single-acting double piston system with spring return

4 **Housing**
weight-reduced due to the use of plastics

## Functional description

The two horizontally arranged pistons are pressed away from each other by compressed air.
The base jaws are opened at an angle and in a synchronized fashion by the bearing-mounted lever mechanism.
Reset is done by compression spring.

## Options and special information

The use of carbon-fiber-reinforced plastics endows this gripper with a very low weight and a disproportionately high gripping force.

## Accessories

Accessories from SCHUNK – the suitable supplement for maximum functionality, reliability and performance of all automation modules.

### Pressure maintenance valve



### Fittings



### Inductive proximity switches



### Sensor cables



### Plastic inserts





### Sensor Distributor

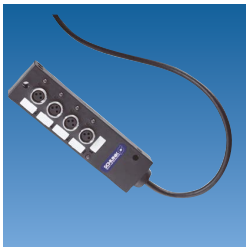

### Gripper pads

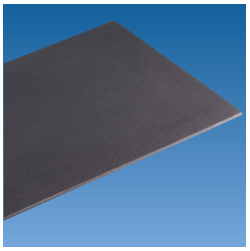

ⓘ For the exact size of the required accessories, availability of this size and the designation and ID, please refer to the additional views at the end of the size in question. You will find more detailed information on our accessory range in the “Accessories” catalog section.

## General note to the series

### Gripping moment

Gripping moment is the arithmetic total of gripping moments for each claw jaw.

### Finger length

The finger length is measured from the upper edge of the gripper housing in direction to the main axis. If the max. admissible finger length is exceeded, the speed of jaw motions have to be reduced and/or the opening angle has to be diminished, as it is done with heavy fingers. The service life of the gripper can shorten.

### Repeat accuracy

is defined as the spread of the limit position after 100 consecutive strokes.

### Workpiece weight

The recommended workpiece weight is calculated for a force-type connection with a coefficient of friction of 0.1 and a safety factor of 2 against slippage of the workpiece on acceleration due to gravity g. Considerably heavier workpiece weights are permitted with form-fit gripping.

### Closing and opening times

Closing and opening times are purely the times that the base jaws or fingers are in motion. Valve switching times, hose filling times or PLC reaction times are not included in the above times and must be taken into consideration when determining cycle times.

# SGW 40

**Pneumatic • 3-Finger Concentric Gripper • Angular Gripper for small components**



## Gripping force, O.D. gripping

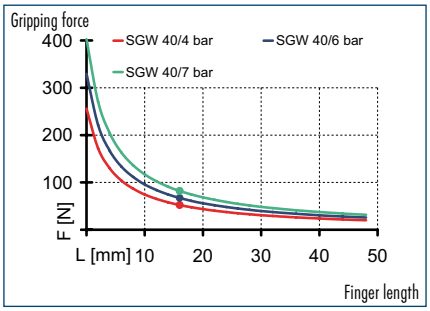


## Finger load

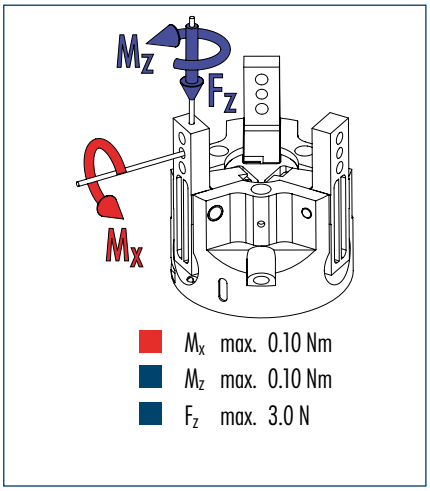


ⓘ The indicated moments and forces are statical values, apply for each base jaw and should not appear simultaneously. If the maximum admissible finger weight is exceeded, throttling is necessary in order to ensure a smooth jaw motion without jerks or bounces. The life-time may reduce.

## Technical data

| Description | | SGW 40 |
|---|---|---|
| ID | | 0305204 |
| Opening angle per jaw | [°] | 8 |
| Closed angle per jaw up to | [°] | 2 |
| Closing moment | [Nm] | 1.35 |
| Weight | [kg] | 0.05 |
| Recommended workpiece weight | [kg] | 0.3 |
| Air consumption per double stroke | [cm³] | 0.5 |
| Min./max. operating pressure | [bar] | 4/7 |
| Nominal operating pressure | [bar] | 6 |
| Closing/opening time | [s] | 0.02/0.03 |
| Max. permitted finger length | [mm] | 32 |
| Max. permitted weight per finger | [kg] | 0.03 |
| IP class | | 20 |
| Min./max. ambient temperature | [°C] | -10/90 |
| Repeat accuracy | [mm] | 0.1 |

## Main view

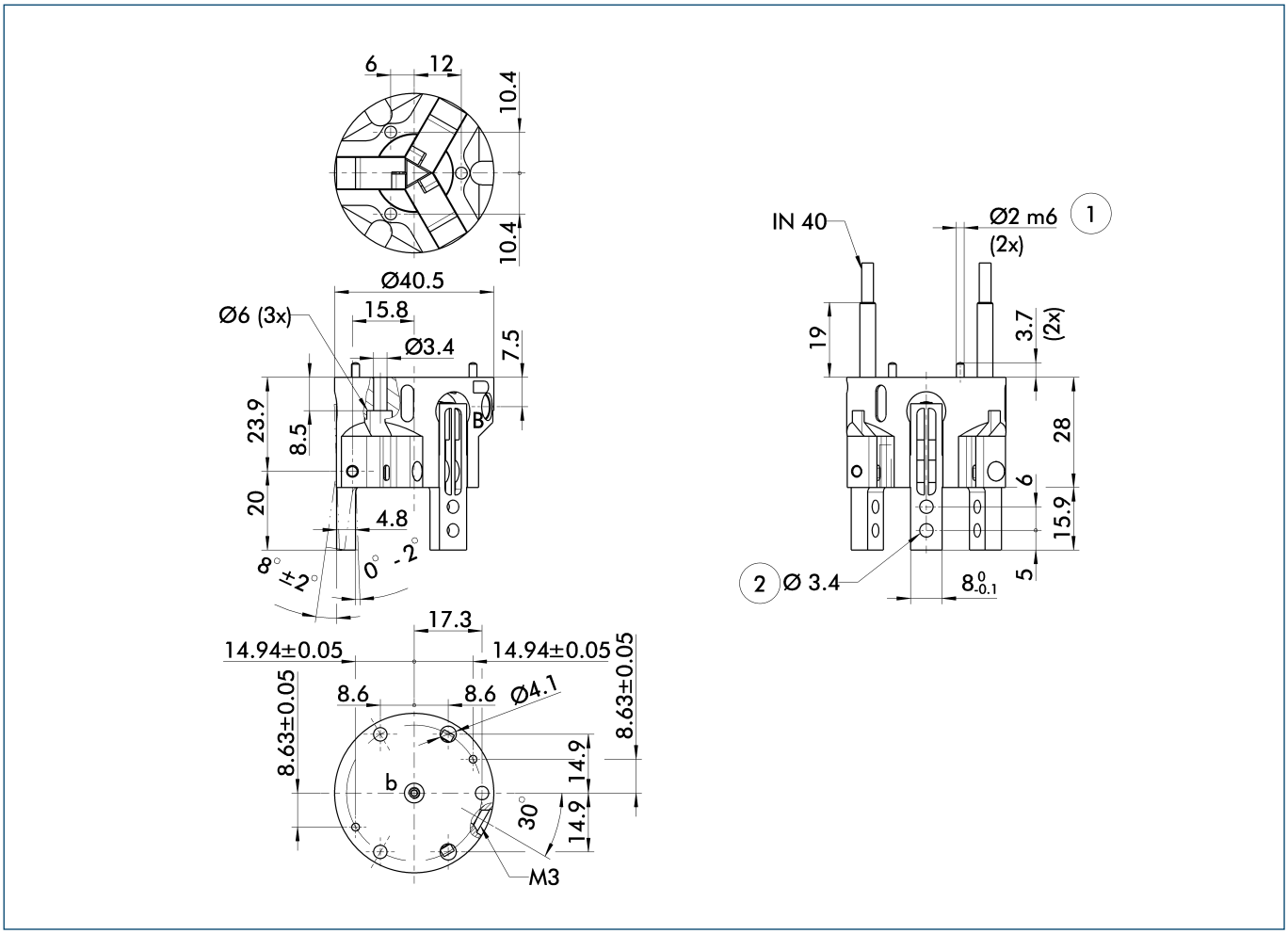


The drawing shows the gripper in the basic version with closed jaws, the dimensions do not include the options described below.

B, b Main/direct connection, gripper closing
① Gripper connection
② Finger connection

ⓘ The SDV-P pressure maintenance valve can be used as a gripping force maintenance device (see "Accessories" catalog section).

## Jaw design O.D. gripping

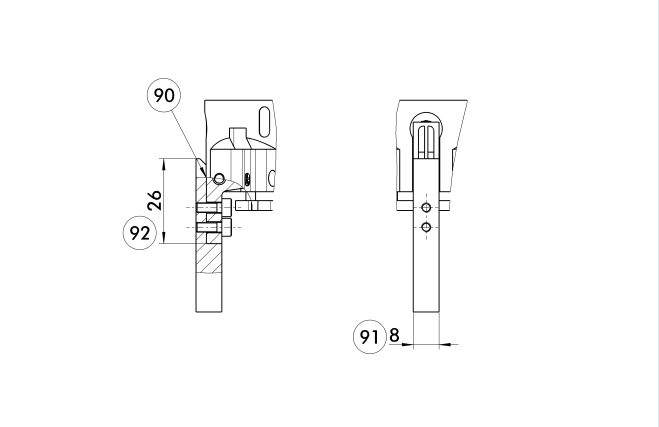


⑨⓪ Support top jaws at the base jaw
⑨① Maximum finger width
⑨② Maximum supporting length

## Inductive proximity switches

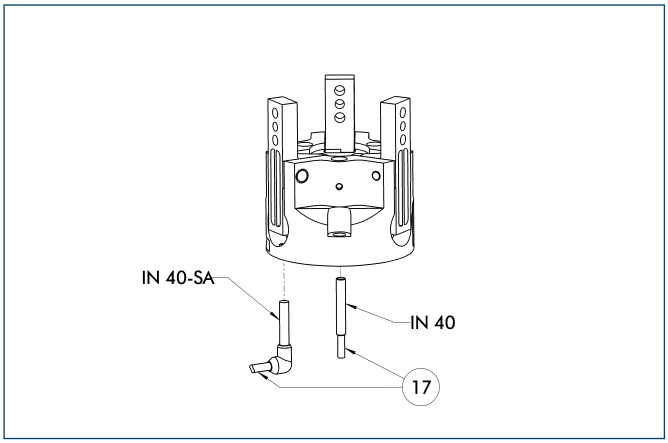


⑰ Cable outlet

End position monitoring for direct mounting

| Description | ID | Recommended product |
|---|---|---|
| Inductive proximity switches | | |
| IN 40-S-M8 | **0301474** | • |
| IN 40-S-M12 | **0301574** | |
| INK 40-S | **0301555** | |
| Inductive proximity switch with lateral outlet | | |
| IN 40-S-M12-SA | **0301577** | |
| IN 40-S-M8-SA | **0301473** | • |
| INK 40-S-SA | **0301565** | |
| Connection cables | | |
| KA BG08-L 3P-0300-PNP | **0301622** | |
| KA BG08-L 3P-0500-PNP | **0301623** | |
| KA BG12-L 3P-0500-PNP | **30016369** | |
| KA BW08-L 3P-0300-PNP | **0301594** | |
| KA BW08-L 3P-0500-PNP | **0301502** | |
| KA BW12-L 3P-0300-PNP | **0301503** | |
| KA BW12-L 3P-0500-PNP | **0301507** | |
| Cable extensions | | |
| KV BG12-SG12 3P-0030-PNP | **0301999** | |
| KV BG12-SG12 3P-0060-PNP | **0301998** | |
| KV BW08-SG08 3P-0030-PNP | **0301495** | |
| KV BW08-SG08 3P-0100-PNP | **0301496** | |
| KV BW08-SG08 3P-0200-PNP | **0301497** | |
| KV BW12-SG12 3P-0030-PNP | **0301595** | |
| KV BW12-SG12 3P-0100-PNP | **0301596** | |
| KV BW12-SG12 3P-0200-PNP | **0301597** | |

ⓘ Two sensors (closer/NO) are required for each gripper, plus extension cables as an option.

ⓘ Please note the minimum permitted bending radii for the sensor cables, which are generally 35 mm.

You can find more detailed information and individual parts of the above-mentioned accessories in the “Accessories” catalog section.

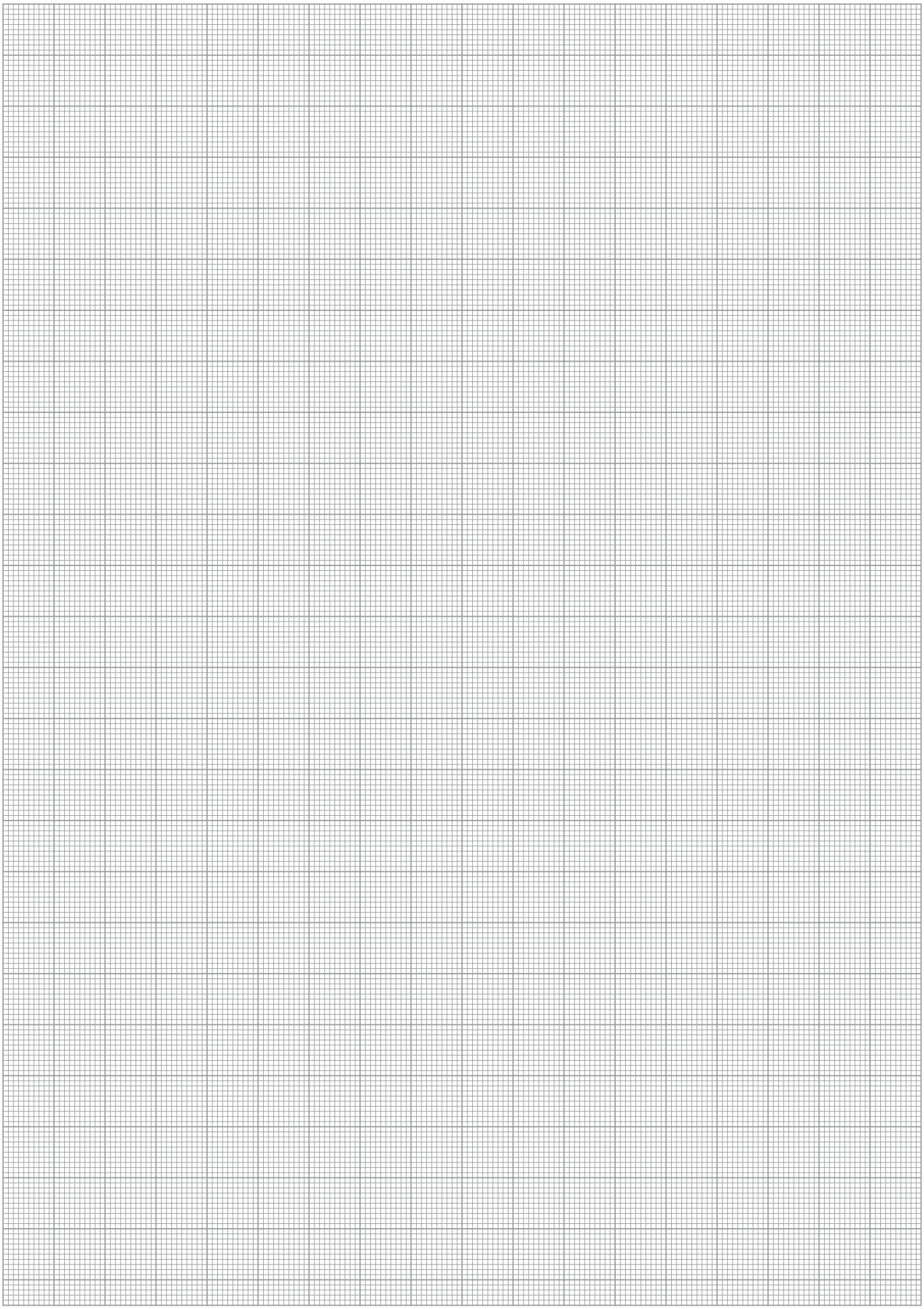

# SGW 50

**Pneumatic • 3-Finger Concentric Gripper • Angular Gripper for small components**



## Gripping force, O.D. gripping

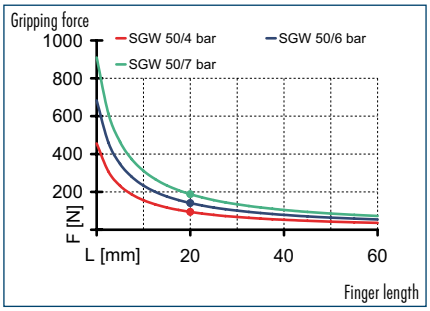


## Finger load

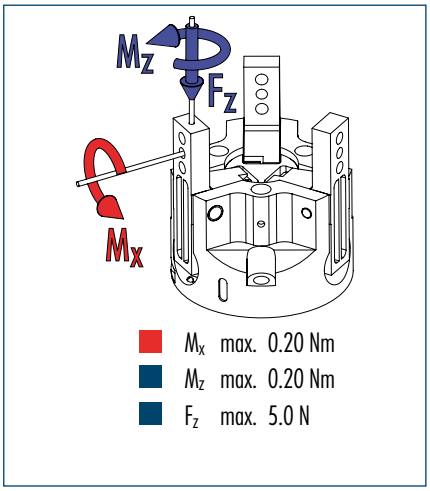


ⓘ The indicated moments and forces are statical values, apply for each base jaw and should not appear simultaneously. If the maximum admissible finger weight is exceeded, throttling is necessary in order to ensure a smooth jaw motion without jerks or bounces. The life-time may reduce.

## Technical data

| Description | | SGW 50 |
|---|---|---|
| ID | | 0305205 |
| Opening angle per jaw | [°] | 8 |
| Closed angle per jaw up to | [°] | 2 |
| Closing moment | [Nm] | 3.55 |
| Weight | [kg] | 0.09 |
| Recommended workpiece weight | [kg] | 0.6 |
| Air consumption per double stroke | [cm³] | 1 |
| Min./max. operating pressure | [bar] | 4/7 |
| Nominal operating pressure | [bar] | 6 |
| Closing/opening time | [s] | 0.02/0.03 |
| Max. permitted finger length | [mm] | 40 |
| Max. permitted weight per finger | [kg] | 0.05 |
| IP class | | 20 |
| Min./max. ambient temperature | [°C] | -10/90 |
| Repeat accuracy | [mm] | 0.1 |

## Main view

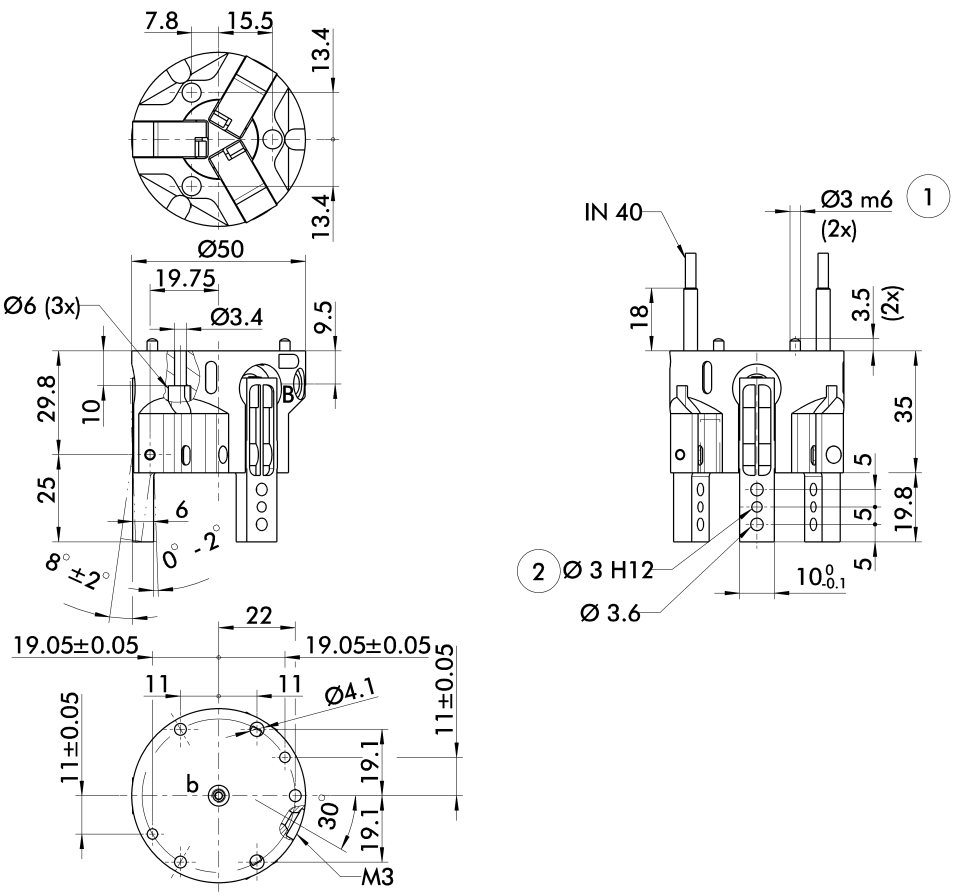


The drawing shows the gripper in the basic version with closed jaws, the dimensions do not include the options described below.

B, b Main/direct connection, gripper closing
① Gripper connection
② Finger connection

ⓘ The SDV-P pressure maintenance valve can be used as a gripping force maintenance device (see "Accessories" catalog section).

## Jaw design O.D. gripping

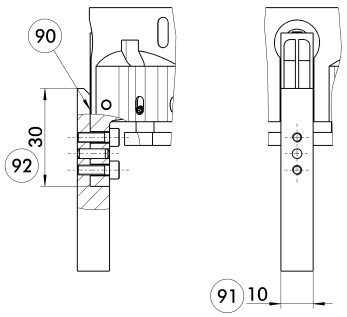


90 Support top jaws at the base jaw
91 Maximum finger width
92 Maximum supporting length

## Inductive proximity switches

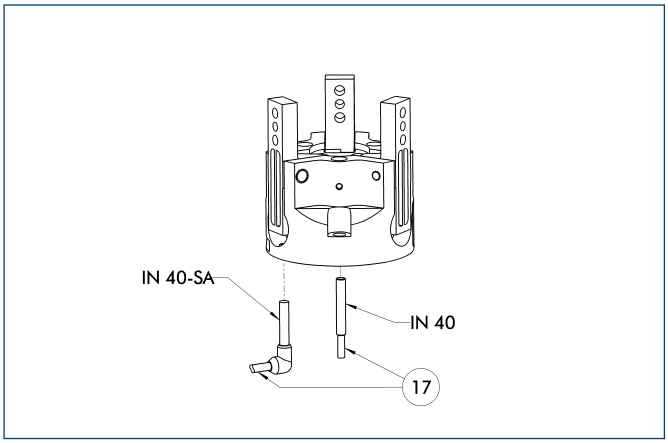


⑰ Cable outlet

End position monitoring for direct mounting

| Description | ID | Recommended product |
|---|---|---|
| Inductive proximity switches | | |
| IN 40-S-M8 | **0301474** | • |
| IN 40-S-M12 | **0301574** | |
| INK 40-S | **0301555** | |
| Inductive proximity switch with lateral outlet | | |
| IN 40-S-M12-SA | **0301577** | |
| IN 40-S-M8-SA | **0301473** | • |
| INK 40-S-SA | **0301565** | |
| Connection cables | | |
| KA BG08-L 3P-0300-PNP | **0301622** | |
| KA BG08-L 3P-0500-PNP | **0301623** | |
| KA BG12-L 3P-0500-PNP | **30016369** | |
| KA BW08-L 3P-0300-PNP | **0301594** | |
| KA BW08-L 3P-0500-PNP | **0301502** | |
| KA BW12-L 3P-0300-PNP | **0301503** | |
| KA BW12-L 3P-0500-PNP | **0301507** | |
| Cable extensions | | |
| KV BG12-SG12 3P-0030-PNP | **0301999** | |
| KV BG12-SG12 3P-0060-PNP | **0301998** | |
| KV BW08-SG08 3P-0030-PNP | **0301495** | |
| KV BW08-SG08 3P-0100-PNP | **0301496** | |
| KV BW08-SG08 3P-0200-PNP | **0301497** | |
| KV BW12-SG12 3P-0030-PNP | **0301595** | |
| KV BW12-SG12 3P-0100-PNP | **0301596** | |
| KV BW12-SG12 3P-0200-PNP | **0301597** | |

ⓘ Two sensors (closer/NO) are required for each gripper, plus extension cables as an option.

ⓘ Please note the minimum permitted bending radii for the sensor cables, which are generally 35 mm.

You can find more detailed information and individual parts of the above-mentioned accessories in the “Accessories” catalog section.

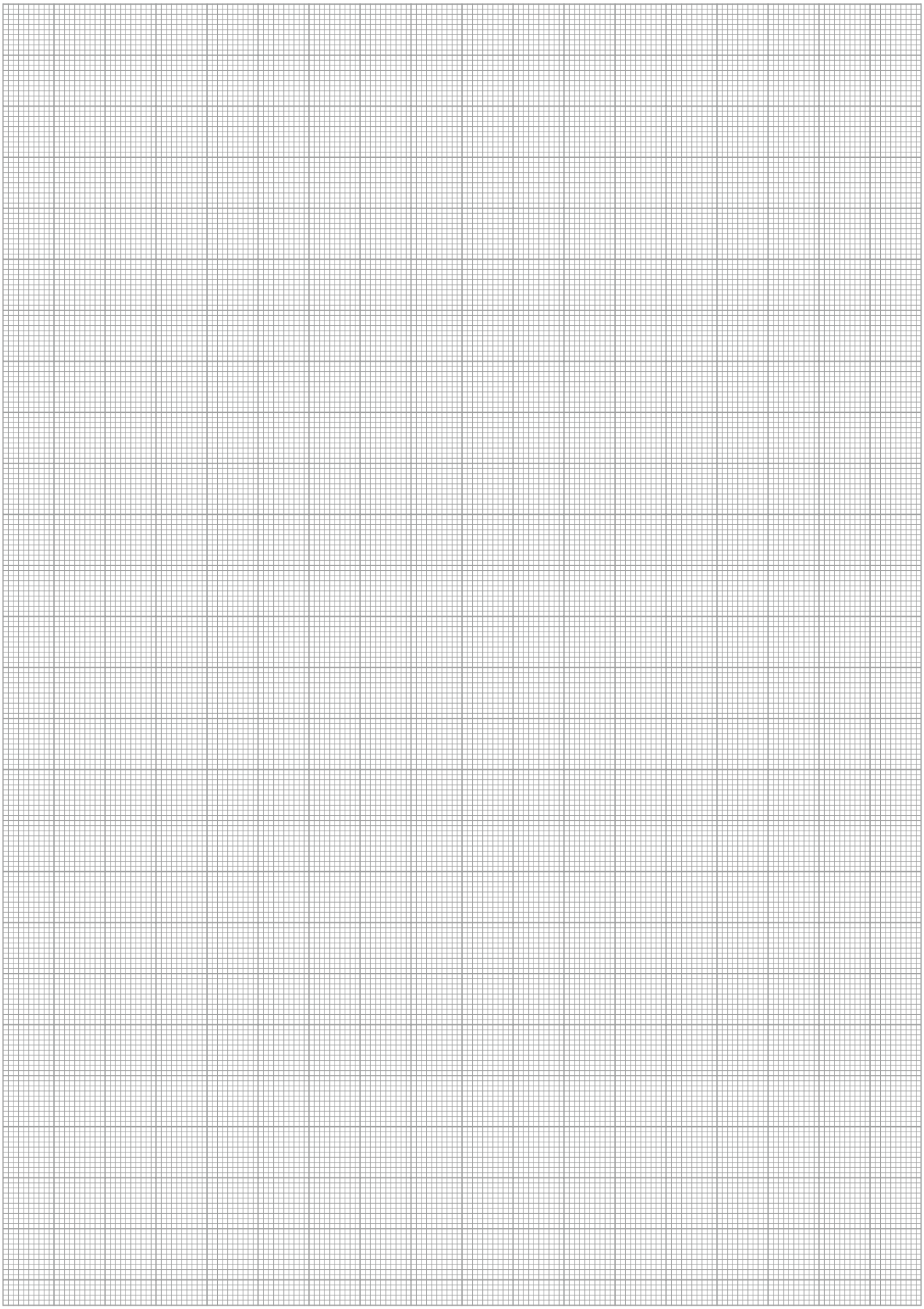

# SGW 64

**Pneumatic • 3-Finger Concentric Gripper • Angular Gripper for small components**



## Gripping force, O.D. gripping

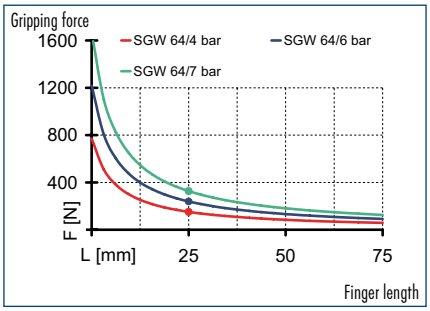


## Finger load

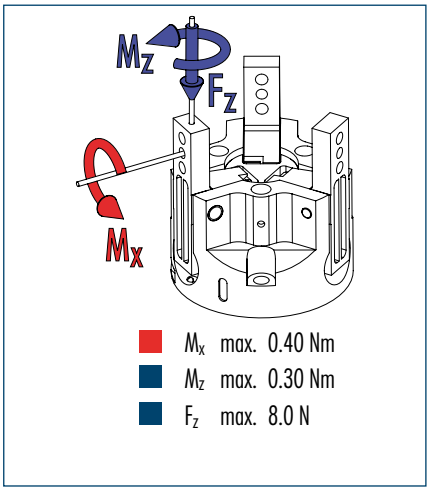


ⓘ The indicated moments and forces are statical values, apply for each base jaw and should not appear simultaneously. If the maximum admissible finger weight is exceeded, throttling is necessary in order to ensure a smooth jaw motion without jerks or bounces. The life-time may reduce.

## Technical data

| Description | | SGW 64 |
|---|---|---|
| ID | | 0305206 |
| Opening angle per jaw | [°] | 8 |
| Closed angle per jaw up to | [°] | 2 |
| Closing moment | [Nm] | 7.45 |
| Weight | [kg] | 0.17 |
| Recommended workpiece weight | [kg] | 1.3 |
| Air consumption per double stroke | [cm³] | 1.8 |
| Min./max. operating pressure | [bar] | 4/7 |
| Nominal operating pressure | [bar] | 6 |
| Closing/opening time | [s] | 0.02/0.03 |
| Max. permitted finger length | [mm] | 50 |
| Max. permitted weight per finger | [kg] | 0.07 |
| IP class | | 20 |
| Min./max. ambient temperature | [°C] | -10/90 |
| Repeat accuracy | [mm] | 0.1 |

## Main view

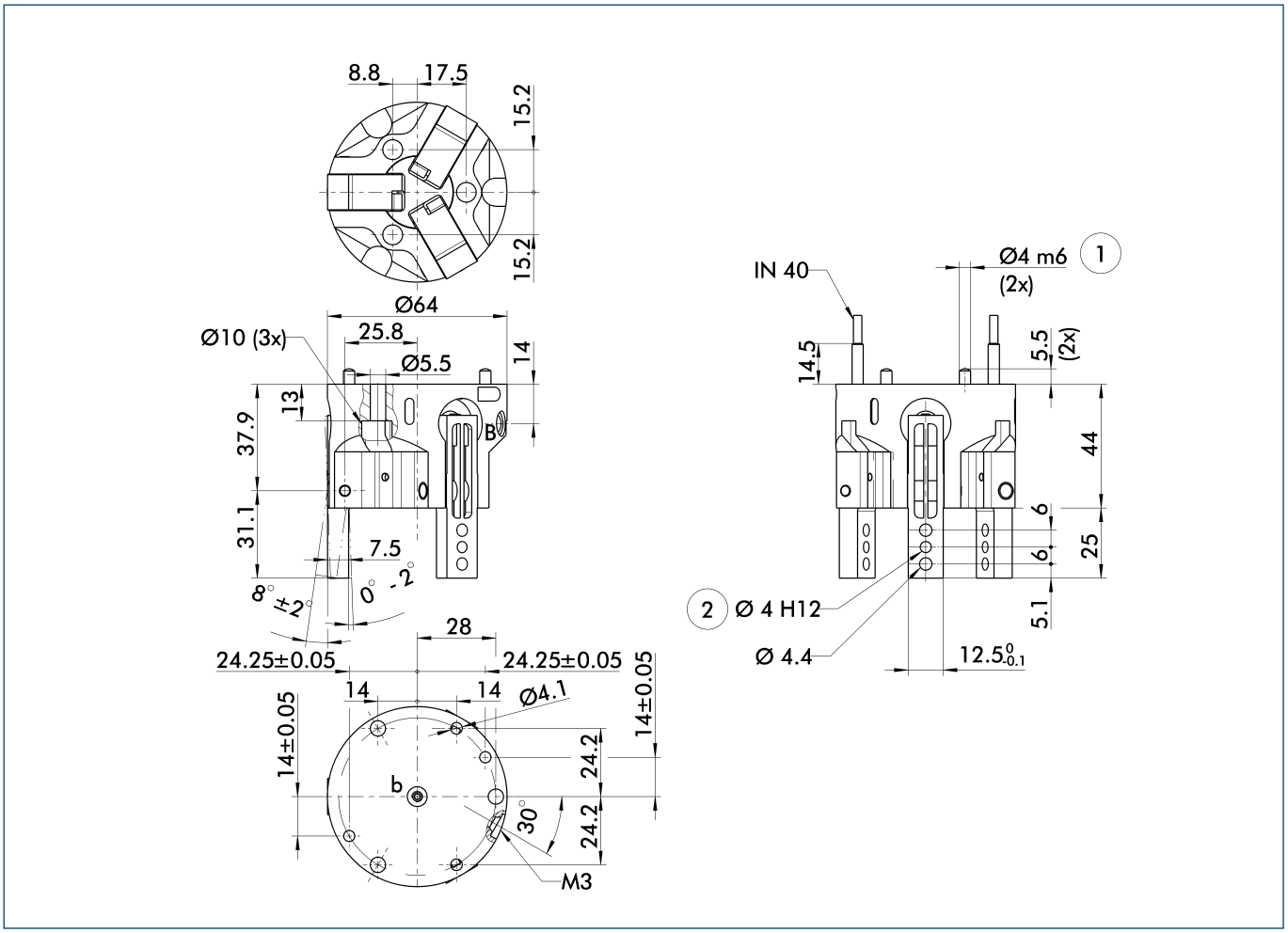


The drawing shows the gripper in the basic version with closed jaws, the dimensions do not include the options described below.

B, b Main/direct connection, gripper closing
① Gripper connection
② Finger connection

ⓘ The SDV-P pressure maintenance valve can be used as a gripping force maintenance device (see "Accessories" catalog section).

## Jaw design O.D. gripping

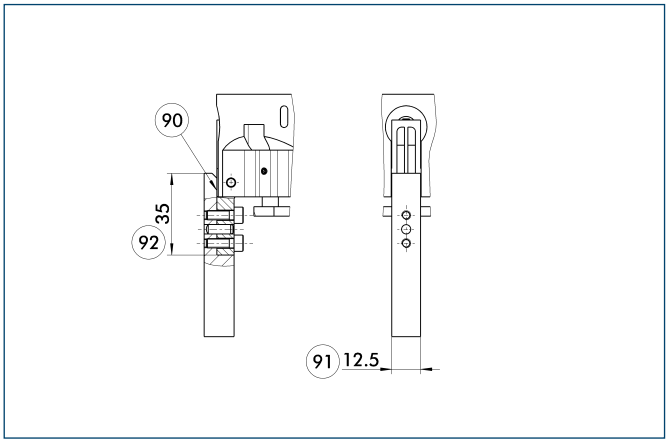


⑨⓪ Support top jaws at the base jaw
⑨① Maximum finger width
⑨② Maximum supporting length

## Inductive proximity switches

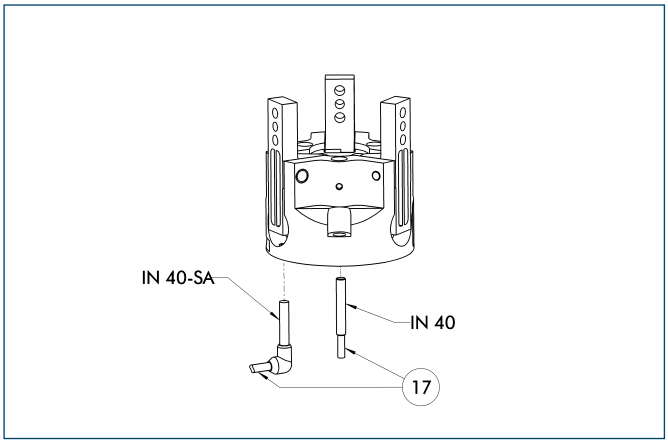


⑰ Cable outlet

End position monitoring for direct mounting

| Description | ID | Recommended product |
|---|---|---|
| Inductive proximity switches | | |
| IN 40-S-M8 | **0301474** | • |
| IN 40-S-M12 | **0301574** | |
| INK 40-S | **0301555** | |
| Inductive proximity switch with lateral outlet | | |
| IN 40-S-M12-SA | **0301577** | |
| IN 40-S-M8-SA | **0301473** | • |
| INK 40-S-SA | **0301565** | |
| Connection cables | | |
| KA BG08-L 3P-0300-PNP | **0301622** | |
| KA BG08-L 3P-0500-PNP | **0301623** | |
| KA BG12-L 3P-0500-PNP | **30016369** | |
| KA BW08-L 3P-0300-PNP | **0301594** | |
| KA BW08-L 3P-0500-PNP | **0301502** | |
| KA BW12-L 3P-0300-PNP | **0301503** | |
| KA BW12-L 3P-0500-PNP | **0301507** | |
| Cable extensions | | |
| KV BG12-SG12 3P-0030-PNP | **0301999** | |
| KV BG12-SG12 3P-0060-PNP | **0301998** | |
| KV BW08-SG08 3P-0030-PNP | **0301495** | |
| KV BW08-SG08 3P-0100-PNP | **0301496** | |
| KV BW08-SG08 3P-0200-PNP | **0301497** | |
| KV BW12-SG12 3P-0030-PNP | **0301595** | |
| KV BW12-SG12 3P-0100-PNP | **0301596** | |
| KV BW12-SG12 3P-0200-PNP | **0301597** | |

ⓘ Two sensors (closer/NO) are required for each gripper, plus extension cables as an option.

ⓘ Please note the minimum permitted bending radii for the sensor cables, which are generally 35 mm.

You can find more detailed information and individual parts of the above-mentioned accessories in the “Accessories” catalog section.

# Pneumatic Gripping Modules

## Pneumatic • 2-Finger Radial Gripper



2-FINGER RADIAL GRIPPER


| Series | Size | Page |
|---|---|---|
| **Universal Gripper** | | |
| LGR | | 1014 |
| LGR | 10 | 1018 |
| LGR | 16 | 1020 |
| LGR | 25 | 1022 |
| LGR | 32 | 1024 |
| LGR | 40 | 1026 |
| PRG | | 1028 |
| PRG | 26 | 1032 |
| PRG | 34 | 1036 |
| PRG | 42 | 1040 |
| PRG | 52 | 1044 |
| PRG | 64 | 1048 |
| PRG | 80 | 1052 |
| PRG | 100 | 1056 |
| PRG | 125 | 1060 |
| **Sealed Gripper** | | |
| DRG | | 1064 |
| DRG | 44 | 1068 |
| DRG | 54 | 1074 |
| DRG | 64 | 1080 |
| DRG | 80 | 1086 |
| DRG | 100 | 1090 |

**Sizes**
10 ... 40

**Weight**
0.07 kg ... 1.27 kg

**Gripping moment**
0.3 Nm ... 15 Nm

**Angle per jaw**
90°

**Workpiece weight**
0.07 kg ... 1066 kg

## Application example




Rotational adjustment for reorientation of workpieces

1 2-Finger Radial Gripper LGR

2 Rotary Actuator SRU-plus

## Universal Gripper
universal 180°-angular gripper with excellent cost-performance ratio



## Field of application
for universal use in clean and slightly dirty environments

## Your advantages and benefits

**Function optimized gripper type**
for maximum cost effectiveness

**Matching SCHUNK C-slot switch**
for process reliable position interrogation

**Hard-anodized or hardened functional components**
for long lifetime

**Centering sleeves**
for a repeat accurate exchange of grippers and fingers

**Compact dimensions**
for minimized interfering contours

## General note to the series

**Principle of function**
Wedge-hook kinematics

**Housing material**
Aluminum alloy, hard-anodized

**Base jaw material**
Steel

**Actuation**
pneumatic, with filtered compressed air (10 microns): dry, lubricated or non-lubricated
Pressure medium: Required quality class of compressed air according to
DIN ISO 8573-1: 6 4 4

**Warranty**
24 months (details, general terms and conditions and operation manuals can be downloaded under www.schunk.com)

**Scope of delivery**
Centering elements, assembly and operating instruction with manufacturer's declaration

## Sectional diagram

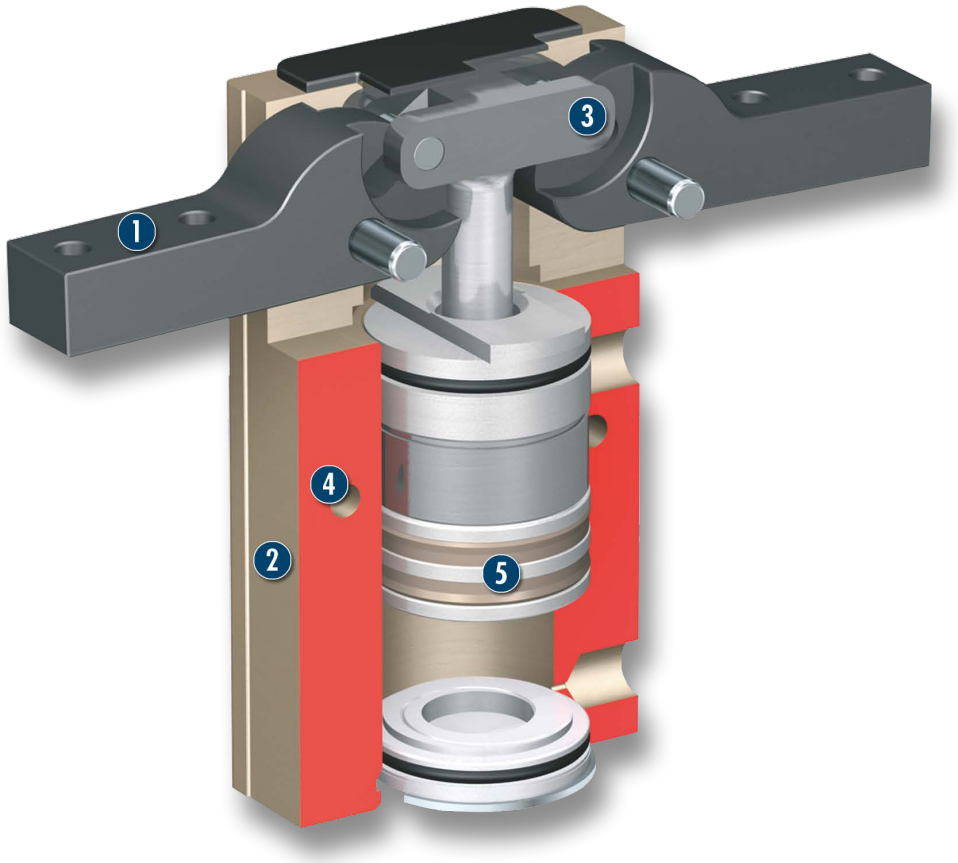


**1 Base jaw**
for the connection of workpiece-specific gripper fingers

**2 Housing**
weight-optimized through application of hard-anodized, high-strength aluminum alloy

**3 Crank mechanism**
for centric gripping

**4 Centering and mounting possibilities**
for universal assembly of the gripper

**5 Drive**
pneumatic piston drive

## Functional description

180° angular grippers (radial grippers) are advantageous in order to avoid additional stroke motions. Since each jaw rotates away by 90°, they are mostly removed from the work area; a stroke motion to retract the entire gripper can be omitted.

## Options and special information

Monitoring with a SCHUNK MMS 22 or RMS 22 sensor is not possible. The use of the recommended sensors MZN and RZN is not compulsory.

## Accessories

Accessories from SCHUNK – the suitable supplement for maximum functionality, reliability and performance of all automation modules.

### Centering sleeves



### Fittings



### Inductive proximity switches



### Programmable magnetic switch



### Pressure maintenance valve





### Sensor cables



### Sensor Distributor

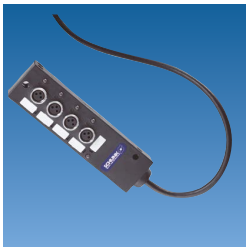

ⓘ For the exact size of the required accessories, availability of this size and the designation and ID, please refer to the additional views at the end of the size in question. You will find more detailed information on our accessory range in the “Accessories” catalog section.

## General note to the series

### Gripping moment

Gripping moment is the arithmetic total of gripping moments for each claw jaw.

### Finger length

The finger length is measured from the upper edge of the gripper housing in direction to the main axis. If the max. admissible finger length is exceeded, the speed of jaw motions have to be reduced and/or the opening angle has to be diminished, as it is done with heavy fingers. The service life of the gripper can shorten.

### Repeat accuracy

is defined as the spread of the limit position after 100 consecutive strokes.

### Workpiece weight

The recommended workpiece weight is calculated for a force-type connection with a coefficient of friction of 0.1 and a safety factor of 2 against slippage of the workpiece on acceleration due to gravity g. Considerably heavier workpiece weights are permitted with form-fit gripping.

### Closing and opening times

Closing and opening times are purely the times that the base jaws or fingers are in motion. Valve switching times, hose filling times or PLC reaction times are not included in the above times and must be taken into consideration when determining cycle times.

# LGR 10





## Gripping force, O.D. gripping

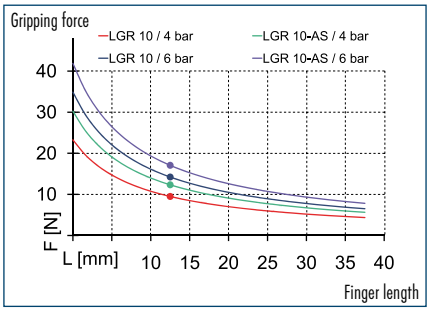


## Finger load

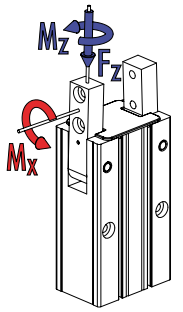


$M_x$ max. 0.50 Nm
$M_z$ max. 0.50 Nm
$F_z$ max. 18.0 N

ⓘ The indicated moments and forces are statical values, apply for each base jaw and should not appear simultaneously. If the maximum admissible finger weight is exceeded, throttling is necessary in order to ensure a smooth jaw motion without jerks or bounces. The life-time may reduce.

## Technical data

| Description | | LGR 10 | LGR 10-AS |
|---|---|---|---|
| ID | | 0312970 | 0312971 |
| Opening angle per jaw | [°] | 90 | 90 |
| Closed angle per jaw up to | [°] | 4 | 4 |
| Closing moment | [Nm] | 0.3 | 0.36 |
| Spring-actuated closing moment | [Nm] | | 0.06 |
| Weight | [kg] | 0.07 | 0.07 |
| Recommended workpiece weight | [kg] | 0.07 | 0.9 |
| Air consumption per double stroke | [cm³] | 1.2 | 1.45 |
| Min./max. operating pressure | [bar] | 2/8 | 4/6.5 |
| Nominal operating pressure | [bar] | 6 | 6 |
| Closing/opening time | [s] | 0.07/0.08 | 0.08/0.09 |
| Max. permitted finger length | [mm] | 25 | 25 |
| Max. permitted weight per finger | [kg] | 0.04 | 0.04 |
| IP class | | 40 | 40 |
| Min./max. ambient temperature | [°C] | -10/90 | -10/90 |
| Repeat accuracy | [mm] | 0.02 | 0.02 |

## Main view

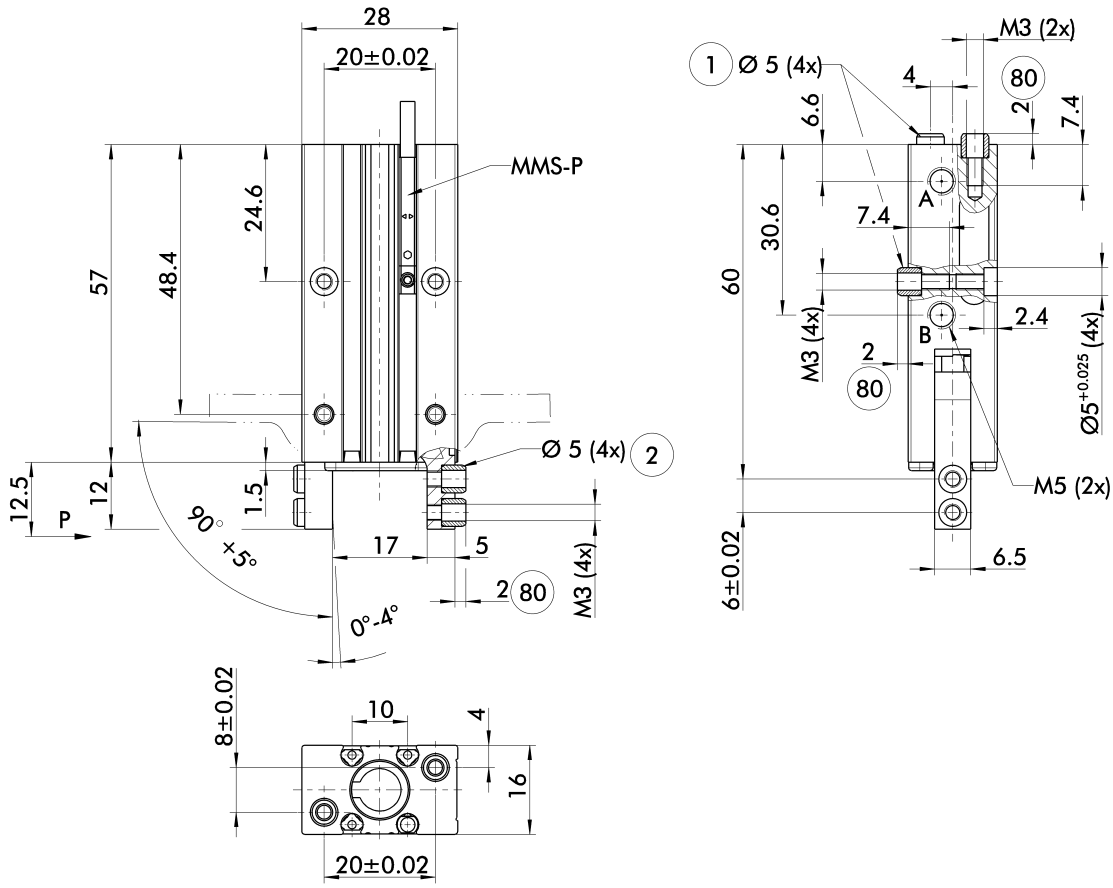


The drawing shows the gripper in the basic version with closed jaws, the dimensions do not include the options described below.

ⓘ The SDV-P pressure maintenance valve can also be used for I.D. or O.D. gripping alternatively or in addition to the spring-loaded, mechanical gripping force maintenance device (see "Accessories" catalog section).

A, a Main/direct connection, gripper opening
B, b Main/direct connection, gripper closing
① Gripper connection
② Finger connection
(80) Depth of the centering sleeve hole in the matching part

## Programmable magnetic switch

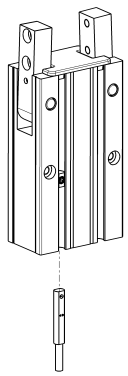

Position monitoring with two programmable positions per sensor. The end position monitoring is mounted in the C-slot.

| Description | ID | Recommended product |
|---|---|---|
| Programmable magnetic switch | | |
| MMS-P 22-S-M8-PNP | **0301370** | • |
| MMSK-P 22-S-PNP | **0301371** | |
| Connection cables | | |
| KA BG08-L 4P-0500 | **0307767** | |
| KA BG08-L 4P-1000 | **0307768** | |
| KA BW08-L 4P-0500 | **0307765** | |
| KA BW08-L 4P-1000 | **0307766** | |
| Sensor Distributor | | |
| V2-M8-4P-2XM8-3P | **0301380** | |

ⓘ Please note the minimum permitted bending radii for the sensor cables, which are generally 35 mm.
ⓘ Per gripper one sensor (closer/NO) is required, optionally a cable extension.

You can find more detailed information and individual parts of the above-mentioned accessories in the "Accessories" catalog section.

# LGR 16

**Pneumatic • 2-Finger Radial Gripper • Universal Gripper**



## Gripping force, O.D. gripping

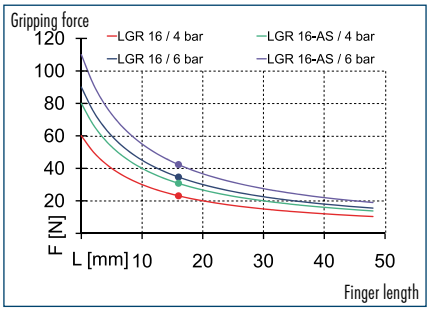


## Finger load

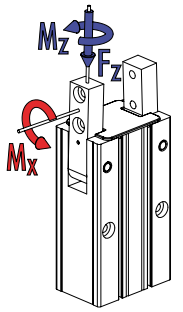


$M_x$ max. 1.50 Nm
$M_z$ max. 1.10 Nm
$F_z$ max. 35.0 N

ⓘ The indicated moments and forces are statical values, apply for each base jaw and should not appear simultaneously. If the maximum admissible finger weight is exceeded, throttling is necessary in order to ensure a smooth jaw motion without jerks or bounces. The life-time may reduce.

## Technical data

| Description | | LGR 16 | LGR 16-AS |
|---|---|---|---|
| ID | | 0312972 | 0312973 |
| Opening angle per jaw | [°] | 90 | 90 |
| Closed angle per jaw up to | [°] | 4 | 4 |
| Closing moment | [Nm] | 0.9 | 1.1 |
| Spring-actuated closing moment | [Nm] | | 0.2 |
| Weight | [kg] | 0.14 | 0.14 |
| Recommended workpiece weight | [kg] | 0.17 | 0.21 |
| Air consumption per double stroke | [cm³] | 3.8 | 3.82 |
| Min./max. operating pressure | [bar] | 2/8 | 4/6.5 |
| Nominal operating pressure | [bar] | 6 | 6 |
| Closing/opening time | [s] | 0.08/0.09 | 0.1/0.15 |
| Max. permitted finger length | [mm] | 32 | 32 |
| Max. permitted weight per finger | [kg] | 0.05 | 0.05 |
| IP class | | 40 | 40 |
| Min./max. ambient temperature | [°C] | -10/90 | -10/90 |
| Repeat accuracy | [mm] | 0.02 | 0.02 |

## Main view

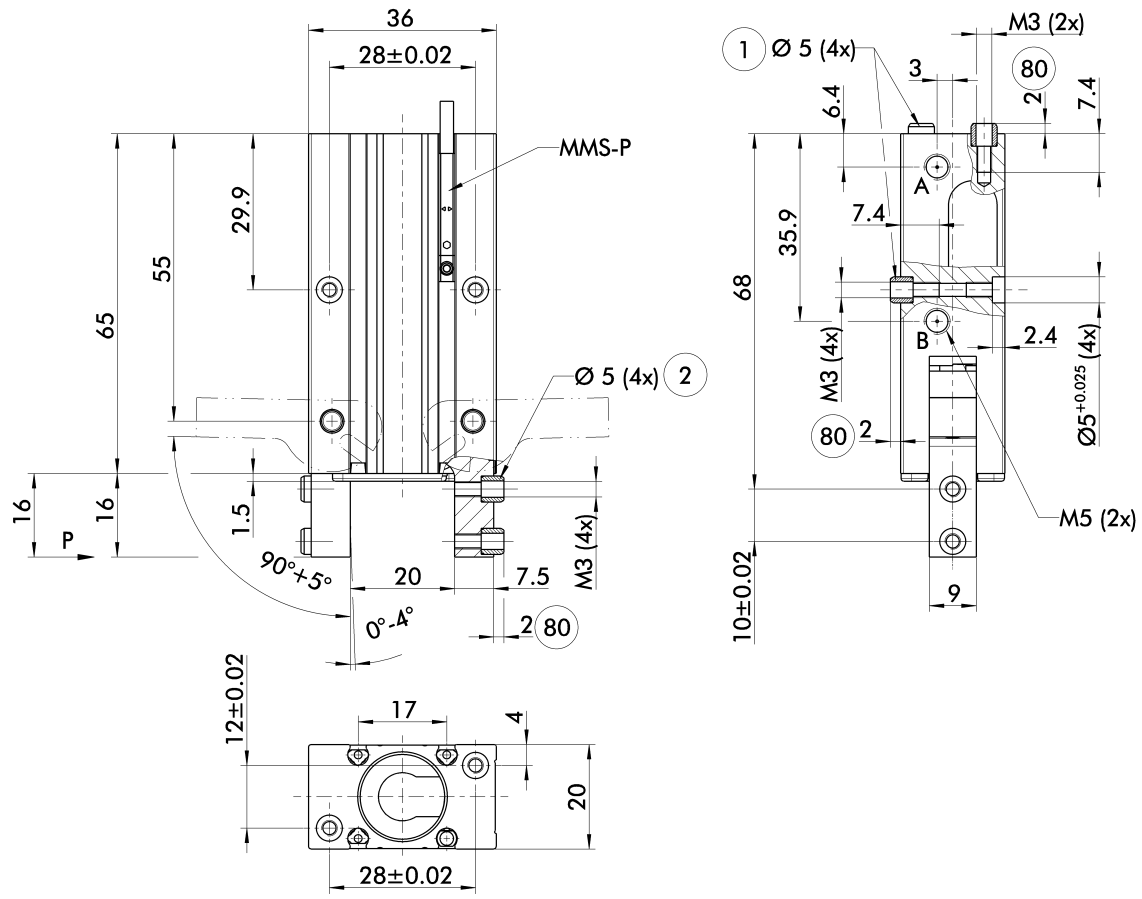


The drawing shows the gripper in the basic version with closed jaws, the dimensions do not include the options described below.

ⓘ The SDV-P pressure maintenance valve can also be used for I.D. or O.D. gripping alternatively or in addition to the spring-loaded, mechanical gripping force maintenance device (see "Accessories" catalog section).

A, a Main/direct connection, gripper opening
B, b Main/direct connection, gripper closing
① Gripper connection
② Finger connection
(80) Depth of the centering sleeve hole in the matching part

## Programmable magnetic switch

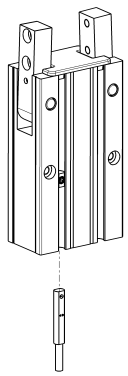

Position monitoring with two programmable positions per sensor. The end position monitoring is mounted in the C-slot.

| Description | ID | Recommended product |
|---|---|---|
| Programmable magnetic switch | | |
| MMS-P 22-S-M8-PNP | **0301370** | • |
| MMSK-P 22-S-PNP | **0301371** | |
| Connection cables | | |
| KA BG08-L 4P-0500 | **0307767** | |
| KA BG08-L 4P-1000 | **0307768** | |
| KA BW08-L 4P-0500 | **0307765** | |
| KA BW08-L 4P-1000 | **0307766** | |
| Sensor Distributor | | |
| V2-M8-4P-2XM8-3P | **0301380** | |

ⓘ Please note the minimum permitted bending radii for the sensor cables, which are generally 35 mm.
ⓘ Per gripper one sensor (closer/NO) is required, optionally a cable extension.

You can find more detailed information and individual parts of the above-mentioned accessories in the "Accessories" catalog section.

# LGR 25

**Pneumatic • 2-Finger Radial Gripper • Universal Gripper**



## Gripping force, O.D. gripping

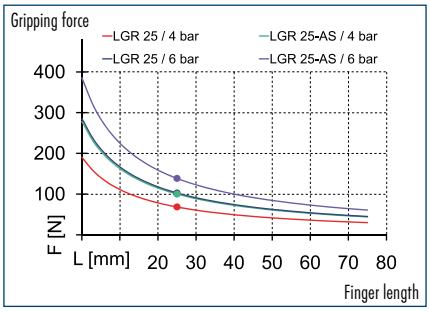


## Finger load

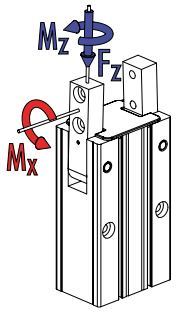


$M_x$ max. 3.70 Nm
$M_z$ max. 2.50 Nm
$F_z$ max. 58.0 N

ⓘ The indicated moments and forces are statical values, apply for each base jaw and should not appear simultaneously. If the maximum admissible finger weight is exceeded, throttling is necessary in order to ensure a smooth jaw motion without jerks or bounces. The life-time may reduce.

## Technical data

| Description | | LGR 25 | LGR 25-AS |
|---|---|---|---|
| ID | | 0312974 | 0312975 |
| Opening angle per jaw | [°] | 90 | 90 |
| Closed angle per jaw up to | [°] | 4 | 4 |
| Closing moment | [Nm] | 4 | 5.4 |
| Spring-actuated closing moment | [Nm] | | 1.4 |
| Weight | [kg] | 0.4 | 0.41 |
| Recommended workpiece weight | [kg] | 0.52 | 0.7 |
| Air consumption per double stroke | [cm³] | 13 | 9.31 |
| Min./max. operating pressure | [bar] | 2/8 | 4/6.5 |
| Nominal operating pressure | [bar] | 6 | 6 |
| Closing/opening time | [s] | 0.1/0.12 | 0.11/0.16 |
| Max. permitted finger length | [mm] | 50 | 50 |
| Max. permitted weight per finger | [kg] | 0.1 | 0.1 |
| IP class | | 40 | 40 |
| Min./max. ambient temperature | [°C] | -10/90 | -10/90 |
| Repeat accuracy | [mm] | 0.02 | 0.02 |

## Main view

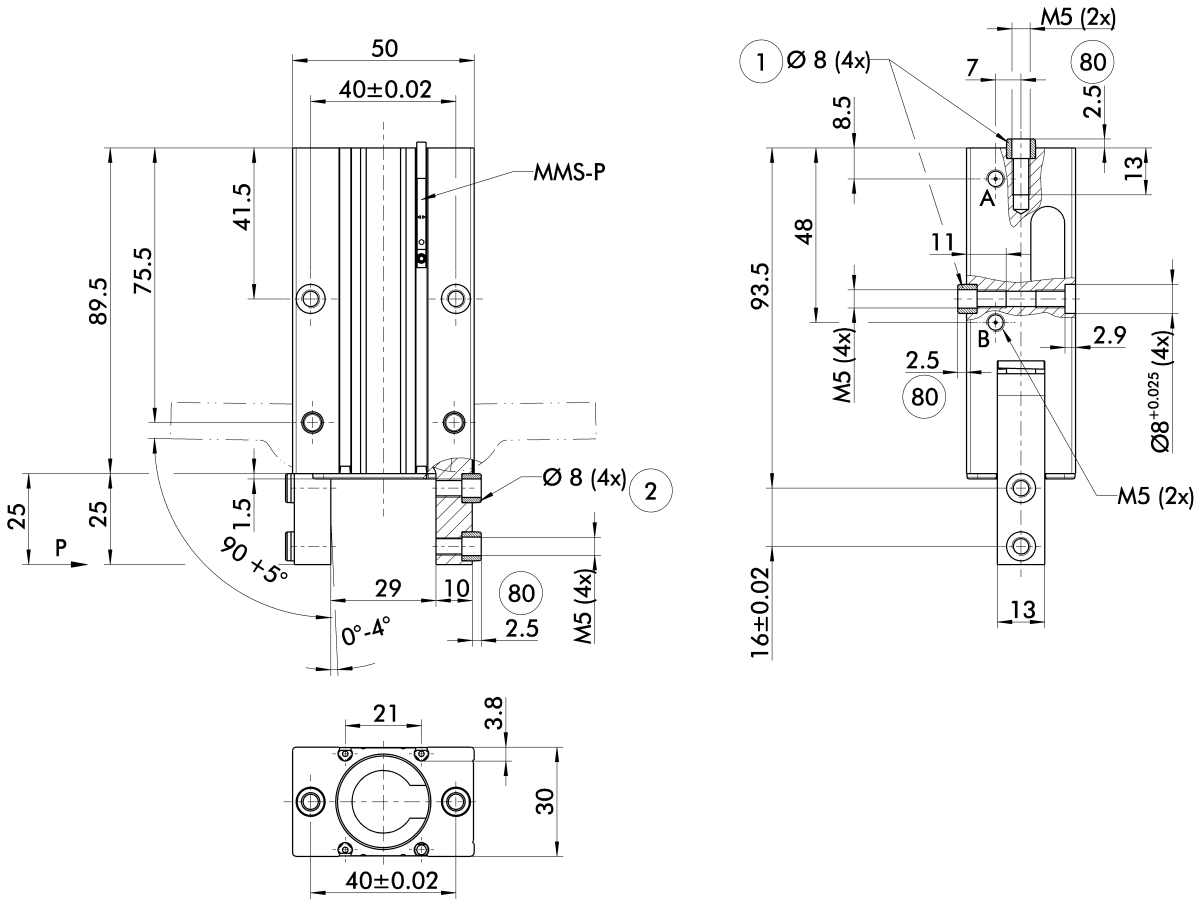


The drawing shows the gripper in the basic version with closed jaws, the dimensions do not include the options described below.

ⓘ The SDV-P pressure maintenance valve can also be used for I.D. or O.D. gripping alternatively or in addition to the spring-loaded, mechanical gripping force maintenance device (see "Accessories" catalog section).

A, a Main/direct connection, gripper opening
B, b Main/direct connection, gripper closing
① Gripper connection
② Finger connection
(80) Depth of the centering sleeve hole in the matching part

## Programmable magnetic switch

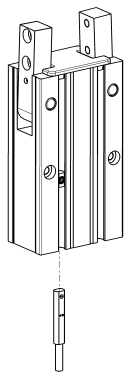

Position monitoring with two programmable positions per sensor. The end position monitoring is mounted in the C-slot.

| Description | ID | Recommended product |
|---|---|---|
| Programmable magnetic switch | | |
| MMS-P 22-S-M8-PNP | **0301370** | • |
| MMSK-P 22-S-PNP | **0301371** | |
| Connection cables | | |
| KA BG08-L 4P-0500 | **0307767** | |
| KA BG08-L 4P-1000 | **0307768** | |
| KA BW08-L 4P-0500 | **0307765** | |
| KA BW08-L 4P-1000 | **0307766** | |
| Sensor Distributor | | |
| V2-M8-4P-2XM8-3P | **0301380** | |

ⓘ Please note the minimum permitted bending radii for the sensor cables, which are generally 35 mm.
ⓘ Per gripper one sensor (closer/NO) is required, optionally a cable extension.

You can find more detailed information and individual parts of the above-mentioned accessories in the "Accessories" catalog section.

# LGR 32

**Pneumatic • 2-Finger Radial Gripper • Universal Gripper**



## Gripping force, O.D. gripping

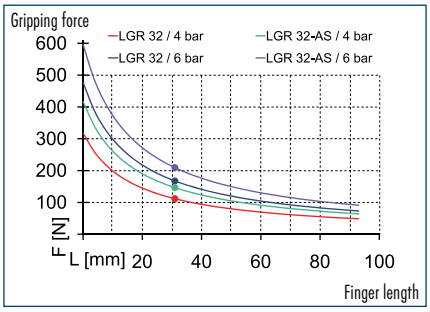


## Finger load

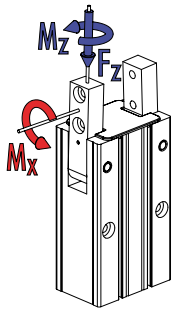


$M_x$ max. 5.50 Nm
$M_z$ max. 3.90 Nm
$F_z$ max. 80.0 N

ⓘ The indicated moments and forces are statical values, apply for each base jaw and should not appear simultaneously. If the maximum admissible finger weight is exceeded, throttling is necessary in order to ensure a smooth jaw motion without jerks or bounces. The life-time may reduce.

## Technical data

| Description | | LGR 32 | LGR 32-AS |
|---|---|---|---|
| ID | | 0312976 | 0312977 |
| Opening angle per jaw | [°] | 90 | 90 |
| Closed angle per jaw up to | [°] | 4 | 4 |
| Closing moment | [Nm] | 8 | 10 |
| Spring-actuated closing moment | [Nm] | | 2 |
| Weight | [kg] | 0.74 | 0.75 |
| Recommended workpiece weight | [kg] | 0.85 | 1066 |
| Air consumption per double stroke | [cm³] | 25 | 15.3 |
| Min./max. operating pressure | [bar] | 2/8 | 4/6.5 |
| Nominal operating pressure | [bar] | 6 | 6 |
| Closing/opening time | [s] | 0.13/0.17 | 0.14/0.2 |
| Max. permitted finger length | [mm] | 62 | 62 |
| Max. permitted weight per finger | [kg] | 0.13 | 0.13 |
| IP class | | 40 | 40 |
| Min./max. ambient temperature | [°C] | -10/90 | -10/90 |
| Repeat accuracy | [mm] | 0.02 | 0.02 |

## Main view

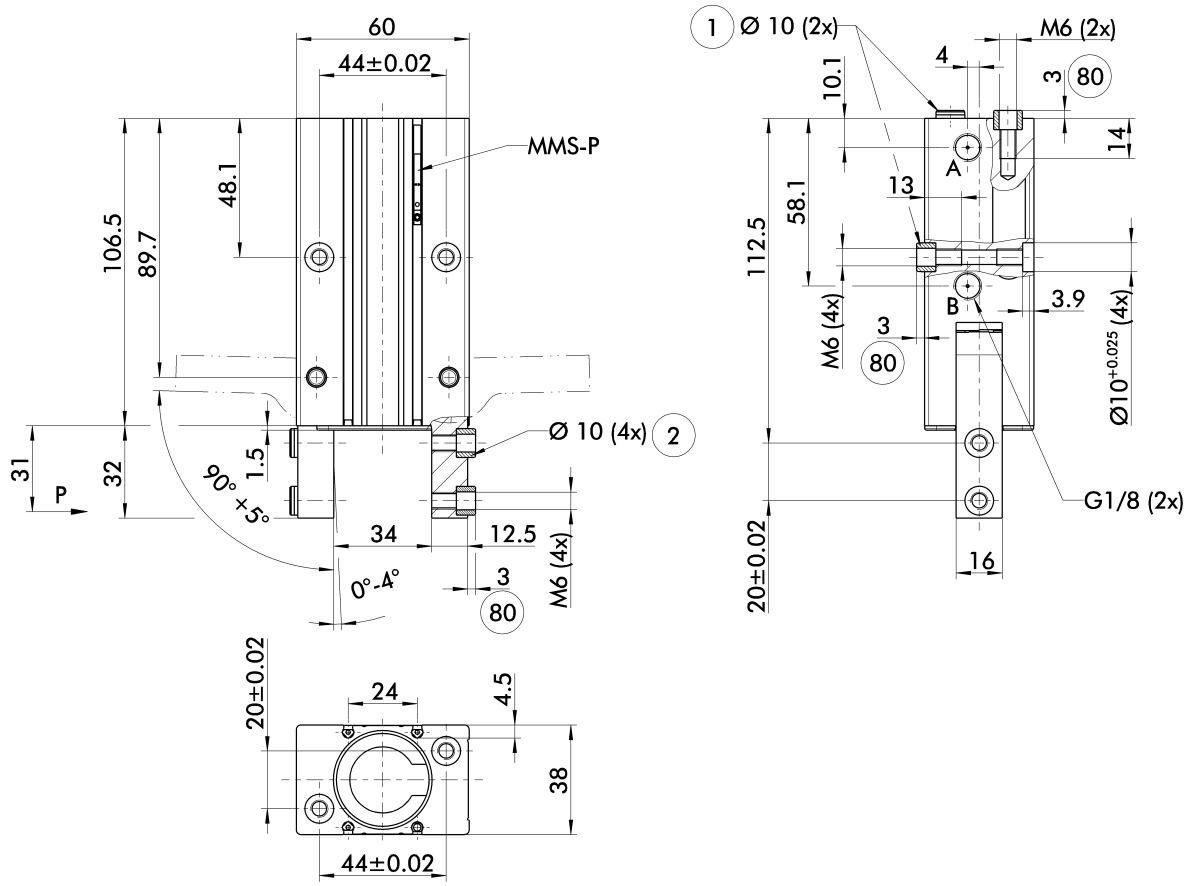


The drawing shows the gripper in the basic version with closed jaws, the dimensions do not include the options described below.

ⓘ The SDV-P pressure maintenance valve can also be used for I.D. or O.D. gripping alternatively or in addition to the spring-loaded, mechanical gripping force maintenance device (see "Accessories" catalog section).

A, a Main/direct connection, gripper opening
B, b Main/direct connection, gripper closing
① Gripper connection
② Finger connection
(80) Depth of the centering sleeve hole in the matching part

## Programmable magnetic switch

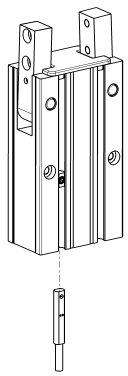

Position monitoring with two programmable positions per sensor. The end position monitoring is mounted in the C-slot.

| Description | ID | Recommended product |
|---|---|---|
| Programmable magnetic switch | | |
| MMS-P 22-S-M8-PNP | **0301370** | • |
| MMSK-P 22-S-PNP | **0301371** | |
| Connection cables | | |
| KA BG08-L 4P-0500 | **0307767** | |
| KA BG08-L 4P-1000 | **0307768** | |
| KA BW08-L 4P-0500 | **0307765** | |
| KA BW08-L 4P-1000 | **0307766** | |
| Sensor Distributor | | |
| V2-M8-4P-2XM8-3P | **0301380** | |

ⓘ Please note the minimum permitted bending radii for the sensor cables, which are generally 35 mm.
ⓘ Per gripper one sensor (closer/NO) is required, optionally a cable extension.

You can find more detailed information and individual parts of the above-mentioned accessories in the "Accessories" catalog section.

# LGR 40

**Pneumatic • 2-Finger Radial Gripper • Universal Gripper**



## Gripping force, O.D. gripping

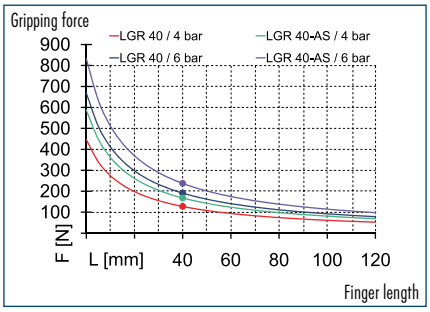


## Finger load

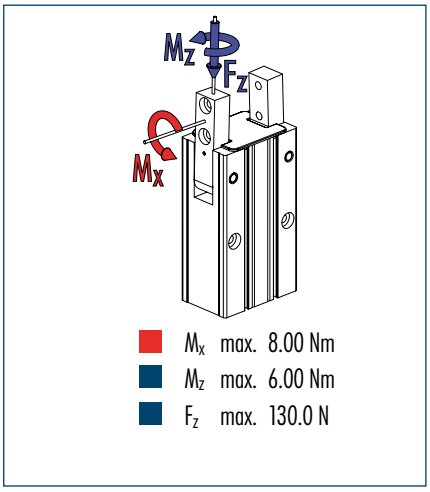


ⓘ The indicated moments and forces are statical values, apply for each base jaw and should not appear simultaneously. If the maximum admissible finger weight is exceeded, throttling is necessary in order to ensure a smooth jaw motion without jerks or bounces. The life-time may reduce.

## Technical data

| Description | | LGR 40 | LGR 40-AS |
|---|---|---|---|
| **ID** | | **0312978** | **0312979** |
| Opening angle per jaw | [°] | 90 | 90 |
| Closed angle per jaw up to | [°] | 4 | 4 |
| Closing moment | [Nm] | 12 | 15 |
| Spring-actuated closing moment | [Nm] | | 3 |
| Weight | [kg] | 1.25 | 1.27 |
| Recommended workpiece weight | [kg] | 1.055 | 1.3 |
| Air consumption per double stroke | [cm³] | 42 | 24 |
| Min./max. operating pressure | [bar] | 2/8 | 4/6.5 |
| Nominal operating pressure | [bar] | 6 | 6 |
| Closing/opening time | [s] | 0.18/0.24 | 0.21/0.31 |
| Max. permitted finger length | [mm] | 80 | 80 |
| Max. permitted weight per finger | [kg] | 0.22 | 0.22 |
| IP class | | 40 | 40 |
| Min./max. ambient temperature | [°C] | -10/90 | -10/90 |
| Repeat accuracy | [mm] | 0.02 | 0.02 |

## Main view

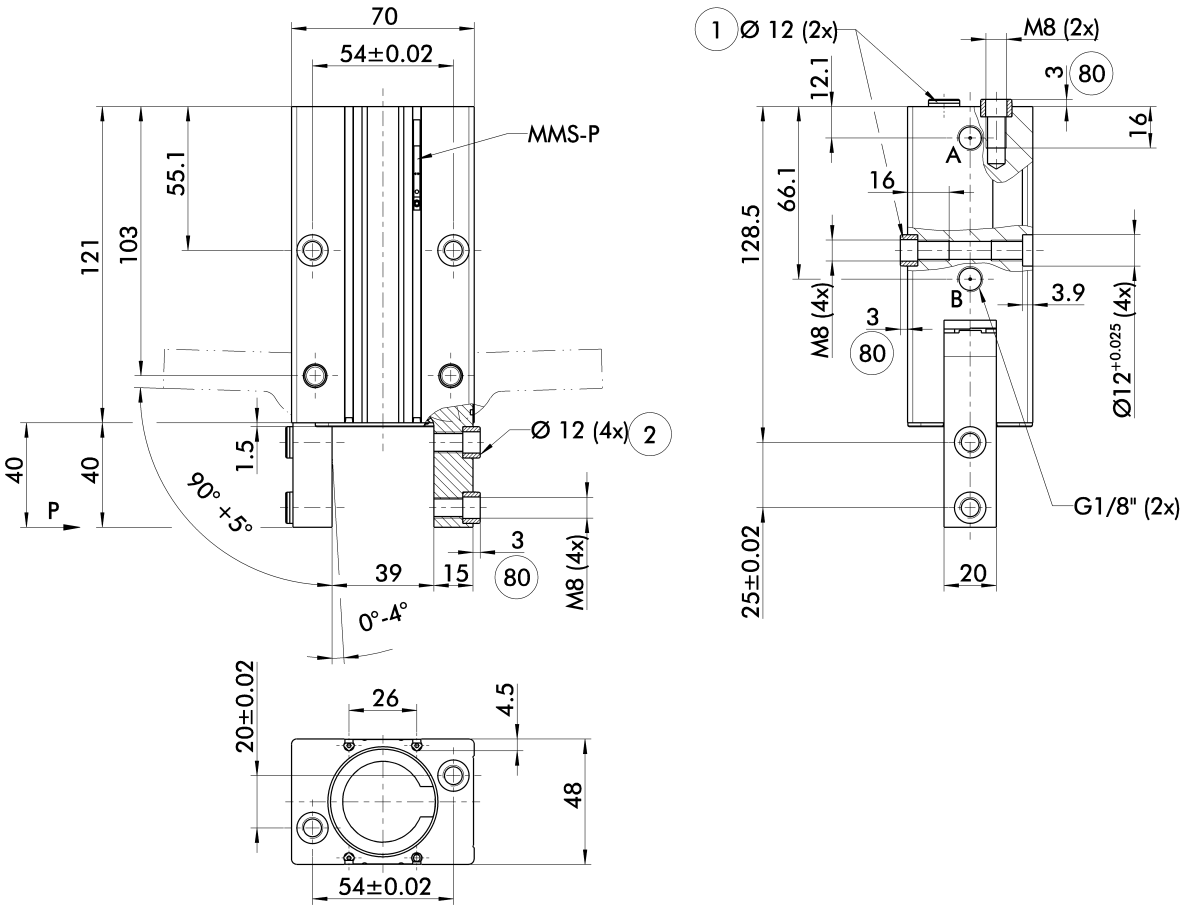


The drawing shows the gripper in the basic version with closed jaws, the dimensions do not include the options described below.

ⓘ The SDV-P pressure maintenance valve can also be used for I.D. or O.D. gripping alternatively or in addition to the spring-loaded, mechanical gripping force maintenance device (see "Accessories" catalog section).

A, a Main/direct connection, gripper opening
B, b Main/direct connection, gripper closing
① Gripper connection
② Finger connection
(80) Depth of the centering sleeve hole in the matching part

## Programmable magnetic switch

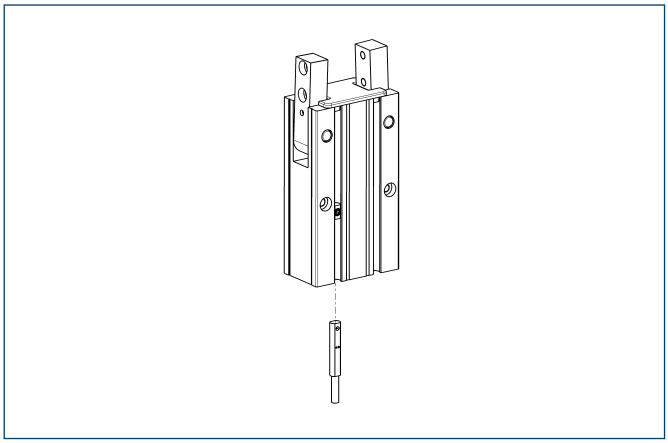

Position monitoring with two programmable positions per sensor. The end position monitoring is mounted in the C-slot.

| Description | ID | Recommended product |
|---|---|---|
| Programmable magnetic switch | | |
| MMS-P 22-S-M8-PNP | **0301370** | • |
| MMSK-P 22-S-PNP | **0301371** | |
| Connection cables | | |
| KA BG08-L 4P-0500 | **0307767** | |
| KA BG08-L 4P-1000 | **0307768** | |
| KA BW08-L 4P-0500 | **0307765** | |
| KA BW08-L 4P-1000 | **0307766** | |
| Sensor Distributor | | |
| V2-M8-4P-2XM8-3P | **0301380** | |

ⓘ Please note the minimum permitted bending radii for the sensor cables, which are generally 35 mm.
ⓘ Per gripper one sensor (closer/NO) is required, optionally a cable extension.

You can find more detailed information and individual parts of the above-mentioned accessories in the "Accessories" catalog section.

# PRG

**Pneumatic • 2-Finger Radial Gripper • Universal Gripper**

**Sizes**
26 ... 125

**Weight**
0.13 kg ... 6.72 kg

**Gripping moment**
2 Nm ... 295 Nm

**Angle per jaw**
30° ... 90°

**Workpiece weight**
0.3 kg ... 9.12 kg

## Application example




**Gripper-swivel combination for handling of small pins. The 180° opening angle of the gripper replaces a stroke unit which is normally necessary.**

1. 2-Finger Radial Gripper PRG
2. Rotary Actuator SRU-plus

## Universal Gripper

180°-Radial Gripper with powerful 1-shift slotted link gear and oval piston

## Field of application

for areas of application which, in addition to a large gripping force, require the shortest possible motion sequences through the radial design of the jaw stroke




## Your advantages and benefits

### Kinematics

The 1-shift slotted link gear assures a consistant closing moment from -5° to +7°.

### Optimized cycle time due to innovative dampening

directly integrated drive chain

### Maximum power density

for higher closing moments, longer and stable gripper fingers

### Many options assure a higher degree of flexibility

Adjusted to the individual application, the PRG is also available with a mechanic gripping force maintenance device, as a high-temperature version, and with three opening angle versions 30°/ 60°/ 90°.

### Air supply via hose-free direct connection or screw connections

for the flexible supply of compressed air in all automation systems

## General note to the series

### Principle of function

Crank drive

### Housing material

Aluminum alloy, hard-anodized

### Base jaw material

Steel

### Actuation

pneumatic, with filtered compressed air (10 microns): dry, lubricated or non-lubricated
Pressure medium: Required quality class of compressed air according to DIN ISO 8573-1: 6 4 4

### Warranty

24 months (details, general terms and conditions and operation manuals can be downloaded under www.schunk.com)

### Scope of delivery

Centering sleeves, O-rings for direct connection, assembly and operating manual with manufacturer's declaration

## Sectional diagram

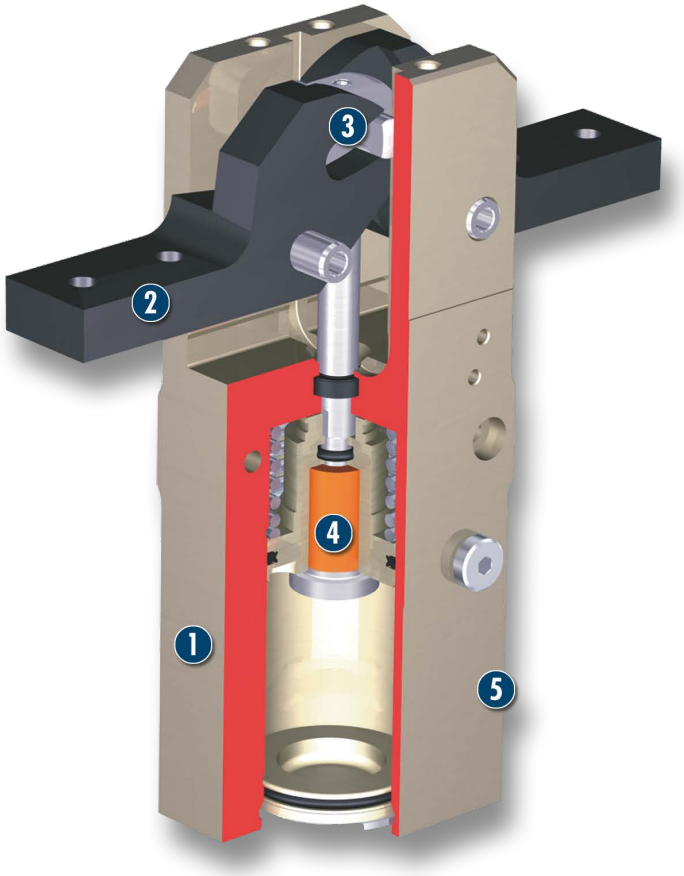




1 **Housing**
weight-optimized through application of hard-anodized, high-strength aluminum alloy

2 **Base jaw**
for the connection of workpiece-specific gripper fingers

3 **Kinematics**
Slotted link gear for very high gripping forces when the workpiece is contacted

4 **Damping**
decoupled, for shorter cycle times

5 **Monitoring**
integrated end position monitoring with magnetic switches

## Functional description

The patented 1-shift slotted gear shift transfers this motion into a powerful closing moment. The closing moment is additionally reinforced by the curved shape of the guidance.
The crank system assures a force-extended jaw stroke behavior, but also a constant closing moment via a large range of closing angle.

## Options and special information

180° radial grippers are advantageous since further stroke motions are no more necessary. Since every jaw swivels away by 90°, the gripper is outside of the working area, and a stroke motion back of the whole gripper is no more necessary.

## Accessories

Accessories from SCHUNK – the suitable supplement for maximum functionality, reliability and performance of all automation modules.

### Centering sleeves



### Fittings



### Magnetic Switches



### Inductive proximity switches



### Plastic inserts





### Sensor cables



### Gripper pads

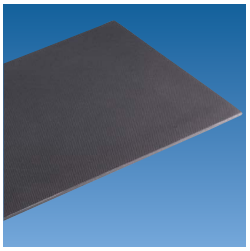

### Sensor Distributor

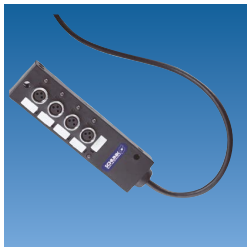

### Pressure maintenance valve



ⓘ For the exact size of the required accessories, availability of this size and the designation and ID, please refer to the additional views at the end of the size in question. You will find more detailed information on our accessory range in the “Accessories” catalog section.

## General note to the series

### Gripping moment

Gripping moment is the arithmetic total of gripping moments for each claw jaw.

### Finger length

The finger length is measured from the upper edge of the gripper housing in direction to the main axis. If the max. admissible finger length is exceeded, the speed of jaw motions have to be reduced and/or the opening angle has to be diminished, as it is done with heavy fingers. The service life of the gripper can shorten.

### Repeat accuracy

is defined as the spread of the limit position after 100 consecutive strokes.

### Workpiece weight

The recommended workpiece weight is calculated for a force-type connection with a coefficient of friction of 0.1 and a safety factor of 2 against slippage of the workpiece on acceleration due to gravity g. Considerably heavier workpiece weights are permitted with form-fit gripping.

### Closing and opening times

Closing and opening times are purely the times that the base jaws or fingers are in motion. Valve switching times, hose filling times or PLC reaction times are not included in the above times and must be taken into consideration when determining cycle times.

# PRG 26

**Pneumatic • 2-Finger Radial Gripper • Universal Gripper**



## Gripping force, O.D. gripping

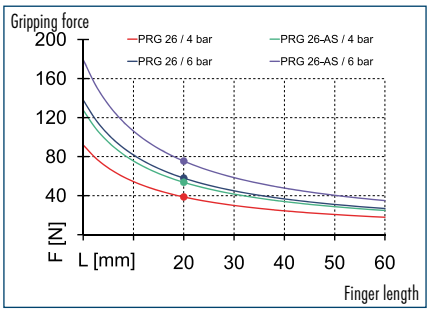


## Maximum admissible inertia J

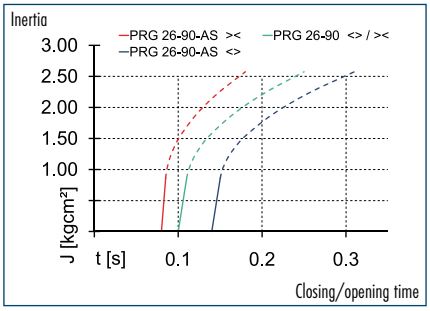


## Finger load

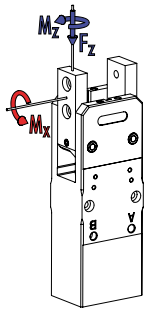


- $M_x$ max. 3.00 Nm
- $M_z$ max. 1.00 Nm
- $F_z$ max. 140.0 N

ⓘ The indicated moments and forces are statical values, apply for each base jaw and should not appear simultaneously. If the maximum admissible finger weight is exceeded, throttling is necessary in order to ensure a smooth jaw motion without jerks or bounces. The life-time may reduce.

## Technical data

| Description | | PRG 26-30 | PRG 26-30-AS | PRG 26-60 | PRG 26-60-AS | PRG 26-90 | PRG 26-90-AS |
|---|---|---|---|---|---|---|---|
| **ID** | | **0303651** | **0303661** | **0303691** | **0303701** | **0303671** | **0303681** |
| Opening angle per jaw | [°] | 30 | 30 | 60 | 60 | 90 | 90 |
| Closed angle per jaw up to | [°] | 4 | 4 | 4 | 4 | 4 | 4 |
| Closing moment | [Nm] | 2 | 2.6 | 2 | 2.6 | 2 | 2.6 |
| Spring-actuated closing moment | [Nm] | | 0.6 | | 0.6 | | 0.6 |
| Weight | [kg] | 0.13 | 0.135 | 0.13 | 0.135 | 0.13 | 0.135 |
| Recommended workpiece weight | [kg] | 0.3 | 0.38 | 0.3 | 0.38 | 0.3 | 0.38 |
| Air consumption per double stroke | [cm³] | 6.5 | 6.5 | 7.5 | 7.5 | 9 | 9 |
| Min./max. operating pressure | [bar] | 2/8 | 4/6.5 | 2/8 | 4/6.5 | 2/8 | 4/6.5 |
| Nominal operating pressure | [bar] | 6 | 6 | 6 | 6 | 6 | 6 |
| Closing time | [s] | 0.03 | 0.03 | 0.07 | 0.05 | 0.1 | 0.08 |
| Opening time | [s] | 0.03 | 0.05 | 0.07 | 0.09 | 0.1 | 0.14 |
| Max. permitted finger length | [mm] | 40 | 40 | 40 | 40 | 40 | 40 |
| Max. mass moment of inertia per jaw | [kgcm²] | 0.86 | 0.86 | 0.86 | 0.86 | 0.86 | 0.86 |
| IP class | | 20 | 20 | 20 | 20 | 20 | 20 |
| Min./max. ambient temperature | [°C] | -10/90 | -10/90 | -10/90 | -10/90 | -10/90 | -10/90 |
| Repeat accuracy | [mm] | 0.05 | 0.05 | 0.05 | 0.05 | 0.05 | 0.05 |
| **OPTIONS and their characteristics** | | | | | | | |
| High-temperature version | | **39303651** | **39303661** | **39303691** | **39303701** | **39303671** | **39303681** |
| Min./max. ambient temperature | [°C] | -10/130 | -10/130 | -10/130 | -10/130 | -10/130 | -10/130 |

ⓘ The unit can be actuated without an external customer-specific throttling at the given value of max. mass moment of inertia per jaw. In case of higher mass moments of inertia, an additional throttling is possible (see diagram). The curve applies for 90° versions. For other versions the curve must be parallely off-set according to the opening and closing times.

## Main view

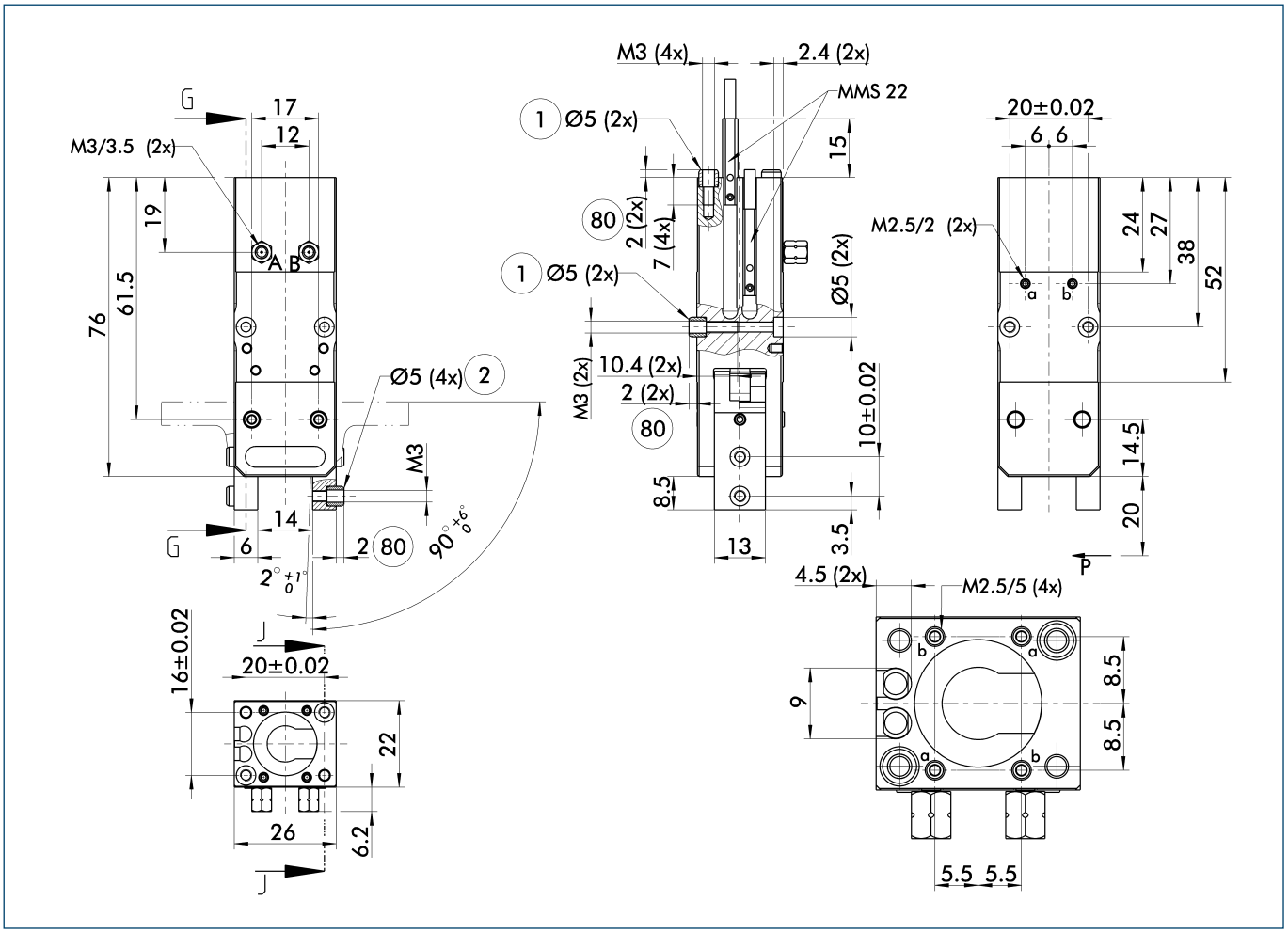


The drawing shows the gripper in the basic version with closed jaws, the dimensions do not include the options described below.

ⓘ The SDV-P pressure maintenance valve can also be used for I.D. or O.D. gripping alternatively or in addition to the spring-loaded, mechanical gripping force maintenance device (see "Accessories" catalog section).

A, a Main/direct connection, gripper opening
B, b Main/direct connection, gripper closing
① Gripper connection
② Finger connection
80 Depth of the centering sleeve hole in the matching part

## Hose-free direct connection

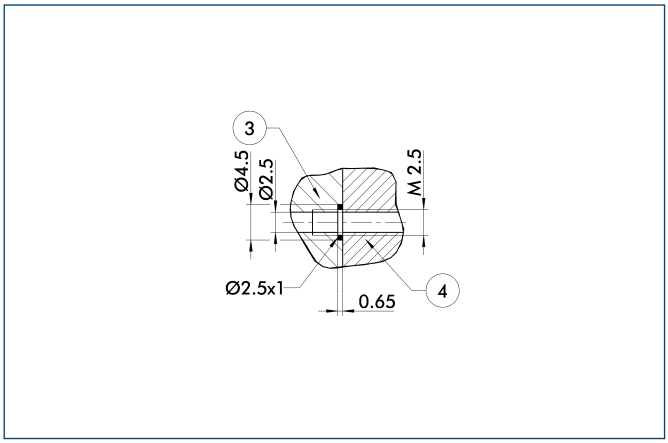


③ Adapter
④ Gripper

The direct connection is used for supplying compressed air without hoses. Instead, the pressure medium is fed through bore-holes in the mounting plate.

## Programmable magnetic switch

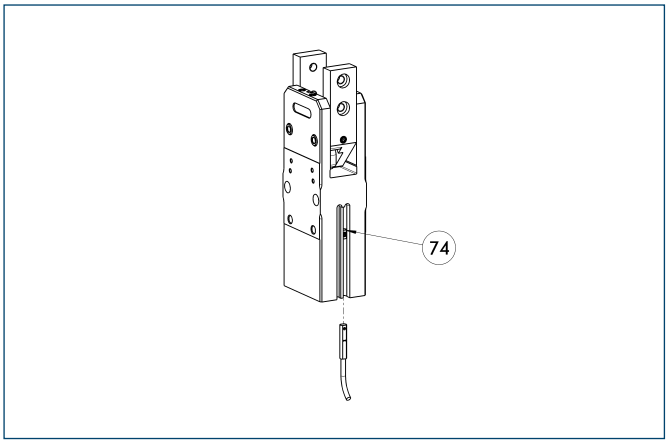


74 Stop for MMS-P

Position monitoring with two programmable positions per sensor. The end position monitoring is mounted in the C-slot.

| Description | ID | Recommended product |
|---|---|---|
| Programmable magnetic switch | | |
| MMS-P 22-S-M8-PNP | **0301370** | • |
| MMSK-P 22-S-PNP | **0301371** | |
| Connection cables | | |
| KA BG08-L 4P-0500 | **0307767** | |
| KA BG08-L 4P-1000 | **0307768** | |
| KA BW08-L 4P-0500 | **0307765** | |
| KA BW08-L 4P-1000 | **0307766** | |
| Sensor Distributor | | |
| V2-M8-4P-2XM8-3P | **0301380** | |

ⓘ Please note the minimum permitted bending radii for the sensor cables, which are generally 35 mm.

ⓘ Per gripper one sensor (closer/NO) is required, optionally a cable extension.

## Electronic magnetic switches

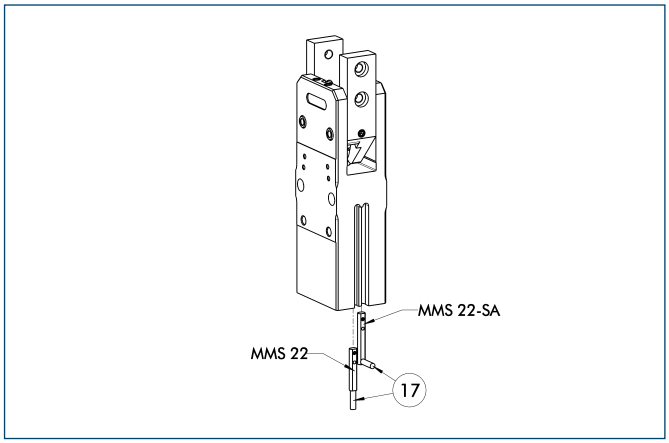


17 Cable outlet

End position monitoring for mounting in the C-slot

| Description | ID | Recommended product |
|---|---|---|
| Electronic magnetic switches | | |
| MMS 22-S-M5-PNP | **0301438** | |
| MMS 22-S-M5-NPN | **0301439** | |
| MMS 22-S-M8-PNP | **0301432** | • |
| MMS 22-S-M8-NPN | **0301433** | |
| MMSK 22-S-PNP | **0301434** | |
| MMSK 22-S-NPN | **0301435** | |
| Electronic magnetic switches with lateral cable outlet | | |
| MMS 22-S-M5-PNP-SA | **0301448** | |
| MMS 22-S-M5-NPN-SA | **0301449** | |
| MMS 22-S-M8-PNP-SA | **0301442** | • |
| MMS 22-S-M8-NPN-SA | **0301443** | |
| MMSK 22-S-PNP-SA | **0301444** | |
| MMSK 22-S-NPN-SA | **0301445** | |
| Reed Switches | | |
| RMS 22-S-M8 | **0377720** | • |
| Connection cables | | |
| KA BG05-L 3P-0300 | **0301652** | |
| KA BG08-L 3P-0300-PNP | **0301622** | |
| KA BG08-L 3P-0500-PNP | **0301623** | |
| KA BW05-L 3P-0300 | **0301650** | |
| KA BW08-L 3P-0300-NPN | **0301602** | |
| KA BW08-L 3P-0300-PNP | **0301594** | |
| KA BW08-L 3P-0500-NPN | **9641116** | |
| KA BW08-L 3P-0500-PNP | **0301502** | |
| Cable extensions | | |
| KV BW08-SG08 3P-0030-PNP | **0301495** | |
| KV BW08-SG08 3P-0100-PNP | **0301496** | |
| KV BW08-SG08 3P-0200-PNP | **0301497** | |

ⓘ Two sensors (closer/NO) are required for each gripper, plus extension cables as an option.

ⓘ Please note the minimum permitted bending radii for the sensor cables, which are generally 35 mm.

You can find more detailed information and individual parts of the above-mentioned accessories in the “Accessories” catalog section.

## Mounting kit for proximity switch

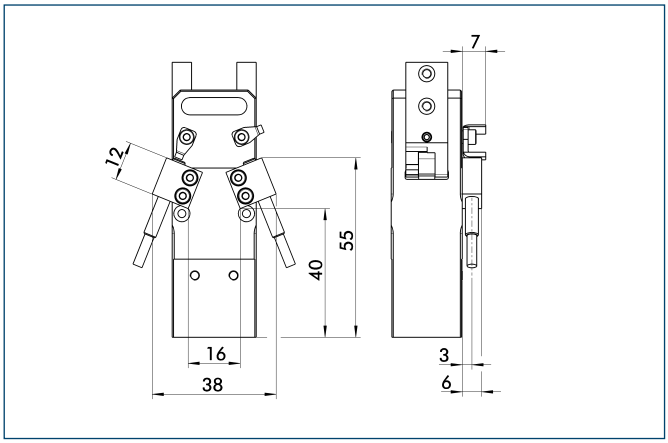


The mounting kit consists of brackets, control cams and appropriate fastening materials. Proximity switches have to be ordered separately.

| Description | ID |
|---|---|
| Mounting kit for proximity switch | |
| AS-PRG 26-IN40 | **0303621** |

## Mounting kit for proximity switch

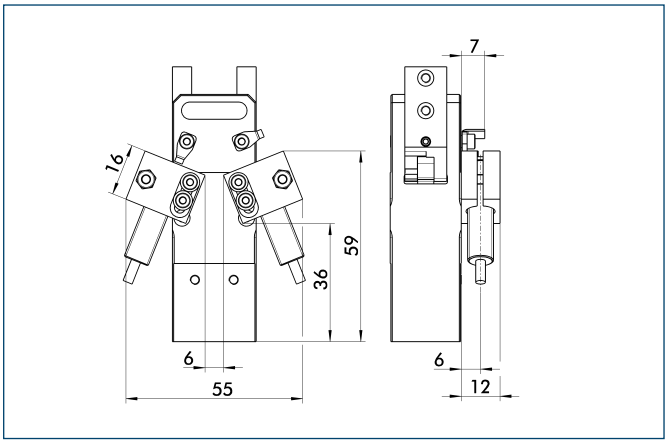


The mounting kit consists of brackets, control cams and appropriate fastening materials. Proximity switches have to be ordered separately.

| Description | ID |
|---|---|
| Mounting kit for proximity switch | |
| AS-PRG 26-IN80 | **0304132** |

## Inductive proximity switches

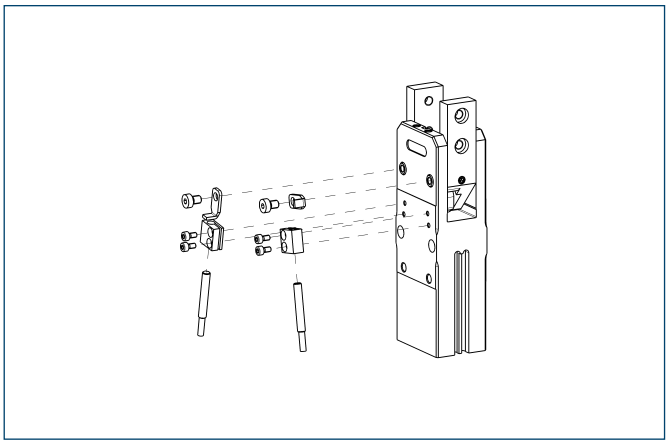

End position monitoring mounted with mounting kit

| Description | ID | Recommended product |
|---|---|---|
| Mounting kit for proximity switch | | |
| AS-PRG 26-IN40 | **0303621** | |
| Inductive proximity switches | | |
| IN 40-S-M8 | **0301474** | • |
| IN 40-S-M12 | **0301574** | |
| INK 40-S | **0301555** | |
| IN 40-S-M5-PNP | **0301491** | |
| IN 40-S-M5-NPN | **0301492** | |
| Inductive proximity switch with lateral outlet | | |
| IN 40-S-M12-SA | **0301577** | |
| IN 40-S-M8-SA | **0301473** | • |
| INK 40-S-SA | **0301565** | |

ⓘ Two sensors (closer/NO) are required for each gripper, plus extension cables as an option.

ⓘ Please note the minimum permitted bending radii for the sensor cables, which are generally 35 mm.

## Inductive proximity switches

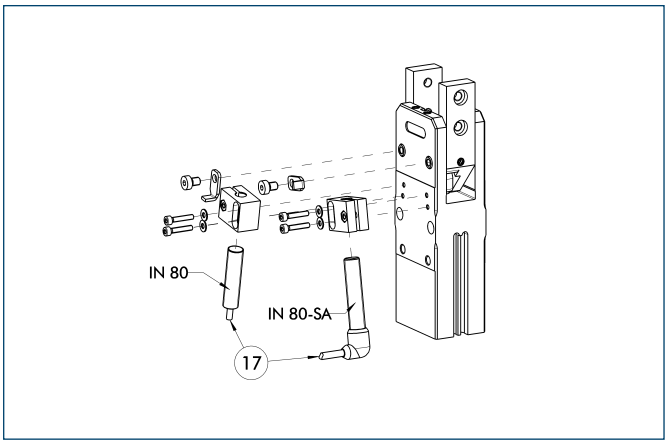


⑰ Cable outlet

End position monitoring mounted with mounting kit

| Description | ID | Recommended product |
|---|---|---|
| Mounting kit for proximity switch | | |
| AS-PRG 26-IN80 | **0304132** | |
| Inductive proximity switches | | |
| IN 80-S-M8 | **0301478** | • |
| IN 80-S-M12 | **0301578** | |
| INK 80-S | **0301550** | |
| Inductive proximity switch with lateral outlet | | |
| IN 80-S-M12-SA | **0301587** | |
| IN 80-S-M8-SA | **0301483** | • |
| INK 80-S-SA | **0301566** | |

ⓘ Two sensors (closer/NO) are required for each gripper, plus extension cables as an option.

ⓘ Please note the minimum permitted bending radii for the sensor cables, which are generally 35 mm.

You can find more detailed information and individual parts of the above-mentioned accessories in the “Accessories” catalog section.

# PRG 34

**Pneumatic • 2-Finger Radial Gripper • Universal Gripper**



## Gripping force, O.D. gripping

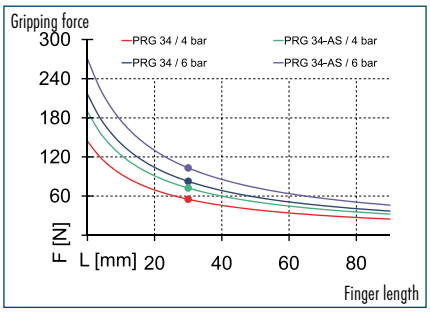


## Maximum admissible inertia J

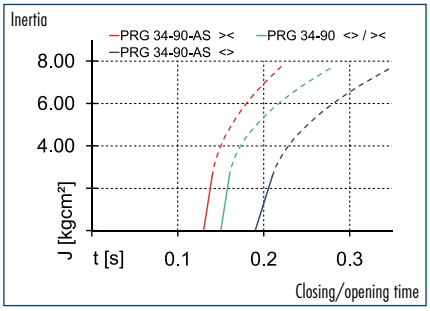


## Finger load

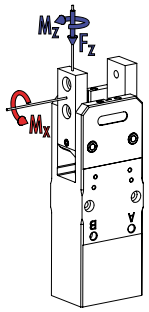


- $M_x$ max. 4.00 Nm
- $M_z$ max. 1.50 Nm
- $F_z$ max. 220.0 N

ⓘ The indicated moments and forces are statical values, apply for each base jaw and should not appear simultaneously. If the maximum admissible finger weight is exceeded, throttling is necessary in order to ensure a smooth jaw motion without jerks or bounces. The life-time may reduce.

## Technical data

| Description | | PRG 34-30 | PRG 34-30-AS | PRG 34-60 | PRG 34-60-AS | PRG 34-90 | PRG 34-90-AS |
|---|---|---|---|---|---|---|---|
| **ID** | | **0303652** | **0303662** | **0303692** | **0303702** | **0303672** | **0303682** |
| Opening angle per jaw | [°] | 30 | 30 | 60 | 60 | 90 | 90 |
| Closed angle per jaw up to | [°] | 4 | 4 | 4 | 4 | 4 | 4 |
| Closing moment | [Nm] | 4 | 5 | 4 | 5 | 4 | 5 |
| Spring-actuated closing moment | [Nm] | | 1 | | 1 | | 1 |
| Weight | [kg] | 0.24 | 0.25 | 0.24 | 0.25 | 0.24 | 0.25 |
| Recommended workpiece weight | [kg] | 0.42 | 0.53 | 0.42 | 0.53 | 0.42 | 0.53 |
| Air consumption per double stroke | [cm³] | 12 | 12 | 14.5 | 14.5 | 17.5 | 17.5 |
| Min./max. operating pressure | [bar] | 2/8 | 4/6.5 | 2/8 | 4/6.5 | 2/8 | 4/6.5 |
| Nominal operating pressure | [bar] | 6 | 6 | 6 | 6 | 6 | 6 |
| Closing time | [s] | 0.05 | 0.04 | 0.1 | 0.09 | 0.15 | 0.13 |
| Opening time | [s] | 0.05 | 0.06 | 0.1 | 0.13 | 0.15 | 0.19 |
| Max. permitted finger length | [mm] | 60 | 60 | 60 | 60 | 60 | 60 |
| Max. mass moment of inertia per jaw | [kgcm²] | 2.58 | 2.58 | 2.58 | 2.58 | 2.58 | 2.58 |
| IP class | | 20 | 20 | 20 | 20 | 20 | 20 |
| Min./max. ambient temperature | [°C] | -10/90 | -10/90 | -10/90 | -10/90 | -10/90 | -10/90 |
| Repeat accuracy | [mm] | 0.05 | 0.05 | 0.05 | 0.05 | 0.05 | 0.05 |
| **OPTIONS and their characteristics** | | | | | | | |
| High-temperature version | | **39303652** | **39303662** | **39303692** | **39303702** | **39303672** | **39303682** |
| Min./max. ambient temperature | [°C] | -10/130 | -10/130 | -10/130 | -10/130 | -10/130 | -10/130 |

ⓘ The unit can be actuated without an external customer-specific throttling at the given value of max. mass moment of inertia per jaw. In case of higher mass moments of inertia, an additional throttling is possible (see diagram). The curve applies for 90° versions. For other versions the curve must be parallely off-set according to the opening and closing times.

## Main view

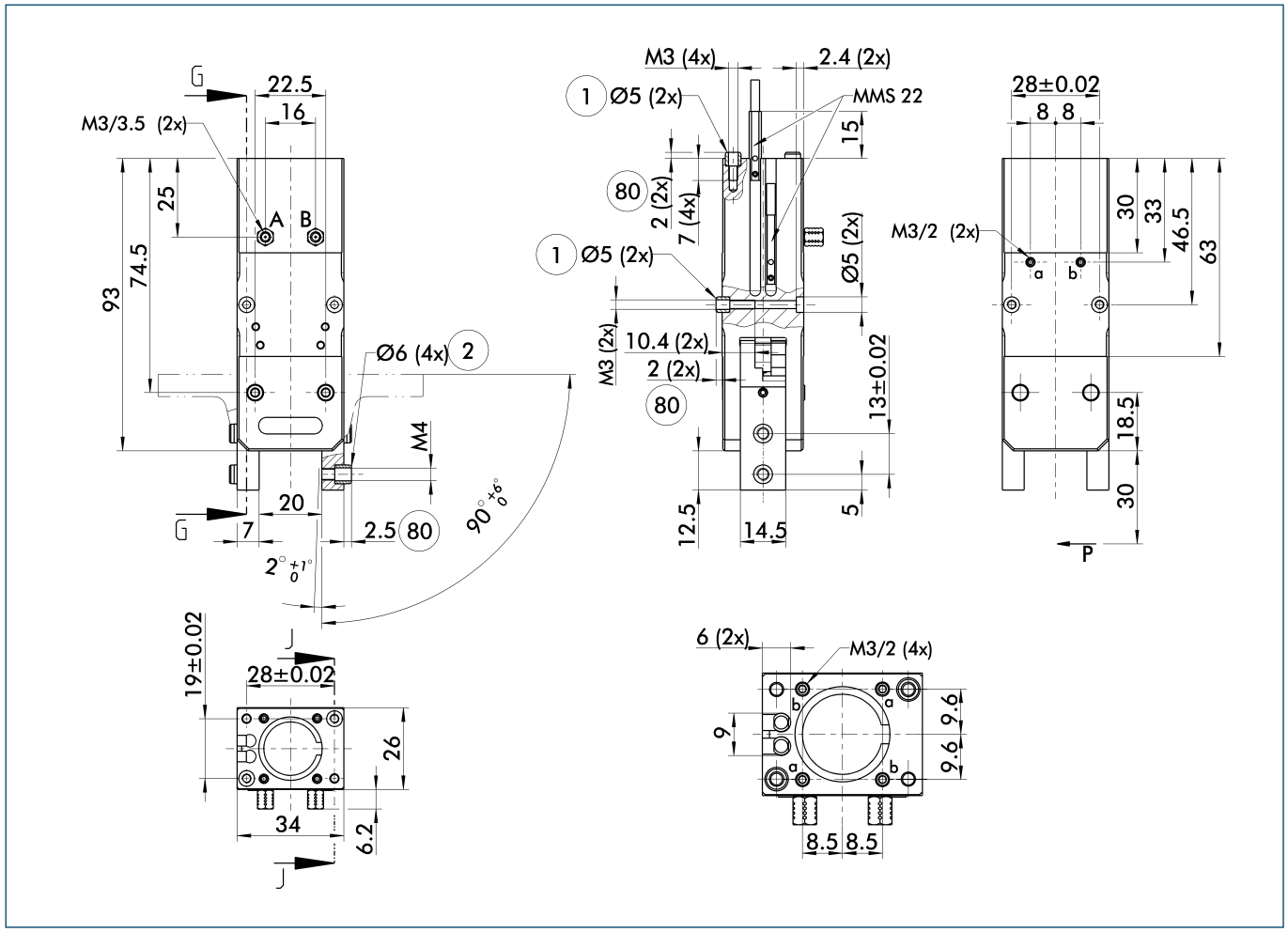


The drawing shows the gripper in the basic version with closed jaws, the dimensions do not include the options described below.

ⓘ The SDV-P pressure maintenance valve can also be used for I.D. or O.D. gripping alternatively or in addition to the spring-loaded, mechanical gripping force maintenance device (see "Accessories" catalog section).

A, a Main/direct connection, gripper opening
B, b Main/direct connection, gripper closing
① Gripper connection
② Finger connection
(80) Depth of the centering sleeve hole in the matching part

## Hose-free direct connection

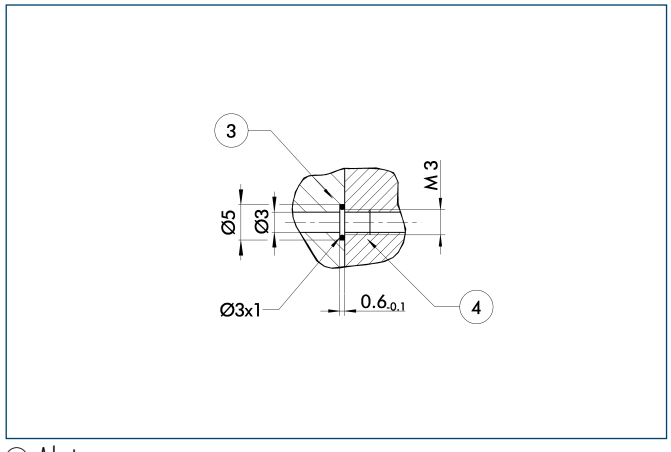


③ Adapter
④ Gripper

The direct connection is used for supplying compressed air without hoses. Instead, the pressure medium is fed through bore-holes in the mounting plate.

## Programmable magnetic switch

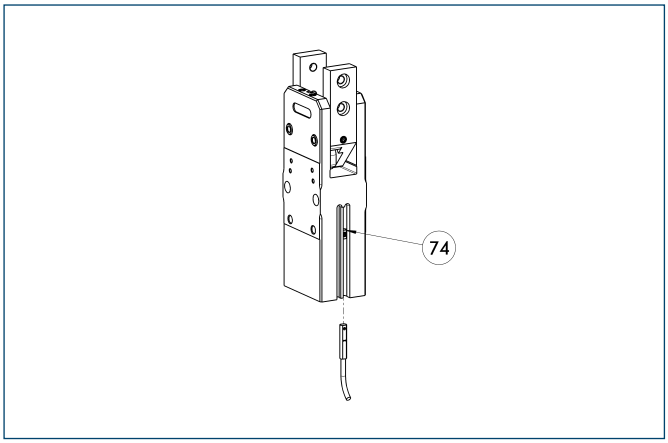


74 Stop for MMS-P

Position monitoring with two programmable positions per sensor. The end position monitoring is mounted in the C-slot.

| Description | ID | Recommended product |
|---|---|---|
| Programmable magnetic switch | | |
| MMS-P 22-S-M8-PNP | **0301370** | • |
| MMSK-P 22-S-PNP | **0301371** | |
| Connection cables | | |
| KA BG08-L 4P-0500 | **0307767** | |
| KA BG08-L 4P-1000 | **0307768** | |
| KA BW08-L 4P-0500 | **0307765** | |
| KA BW08-L 4P-1000 | **0307766** | |
| Sensor Distributor | | |
| V2-M8-4P-2XM8-3P | **0301380** | |

ⓘ Please note the minimum permitted bending radii for the sensor cables, which are generally 35 mm.

ⓘ Per gripper one sensor (closer/NO) is required, optionally a cable extension.

## Electronic magnetic switches

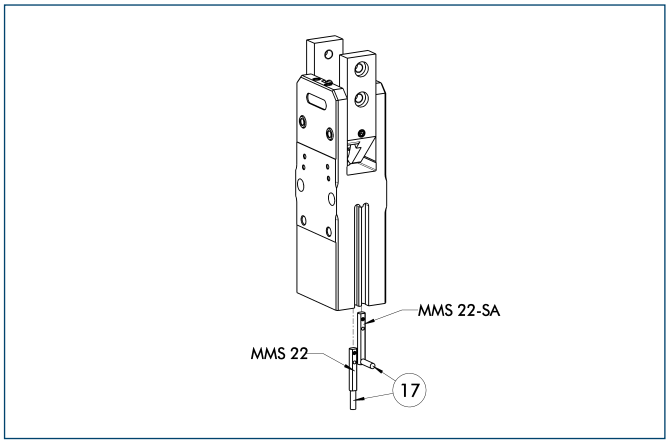


17 Cable outlet

End position monitoring for mounting in the C-slot

| Description | ID | Recommended product |
|---|---|---|
| Electronic magnetic switches | | |
| MMS 22-S-M5-PNP | **0301438** | |
| MMS 22-S-M5-NPN | **0301439** | |
| MMS 22-S-M8-PNP | **0301432** | • |
| MMS 22-S-M8-NPN | **0301433** | |
| MMSK 22-S-PNP | **0301434** | |
| MMSK 22-S-NPN | **0301435** | |
| Electronic magnetic switches with lateral cable outlet | | |
| MMS 22-S-M5-PNP-SA | **0301448** | |
| MMS 22-S-M5-NPN-SA | **0301449** | |
| MMS 22-S-M8-PNP-SA | **0301442** | • |
| MMS 22-S-M8-NPN-SA | **0301443** | |
| MMSK 22-S-PNP-SA | **0301444** | |
| MMSK 22-S-NPN-SA | **0301445** | |
| Reed Switches | | |
| RMS 22-S-M8 | **0377720** | • |
| Connection cables | | |
| KA BG05-L 3P-0300 | **0301652** | |
| KA BG08-L 3P-0300-PNP | **0301622** | |
| KA BG08-L 3P-0500-PNP | **0301623** | |
| KA BW05-L 3P-0300 | **0301650** | |
| KA BW08-L 3P-0300-NPN | **0301602** | |
| KA BW08-L 3P-0300-PNP | **0301594** | |
| KA BW08-L 3P-0500-NPN | **9641116** | |
| KA BW08-L 3P-0500-PNP | **0301502** | |
| Cable extensions | | |
| KV BW08-SG08 3P-0030-PNP | **0301495** | |
| KV BW08-SG08 3P-0100-PNP | **0301496** | |
| KV BW08-SG08 3P-0200-PNP | **0301497** | |

ⓘ Two sensors (closer/NO) are required for each gripper, plus extension cables as an option.

ⓘ Please note the minimum permitted bending radii for the sensor cables, which are generally 35 mm.

You can find more detailed information and individual parts of the above-mentioned accessories in the “Accessories” catalog section.

## Mounting kit for proximity switch

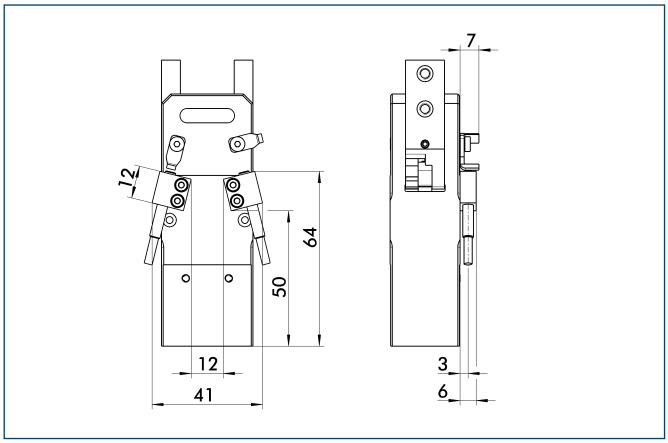


The mounting kit consists of brackets, control cams and appropriate fastening materials. Proximity switches have to be ordered separately.

| Description | ID |
|---|---|
| Mounting kit for proximity switch | |
| AS-PRG 34-IN40 | **0303622** |

## Mounting kit for proximity switch

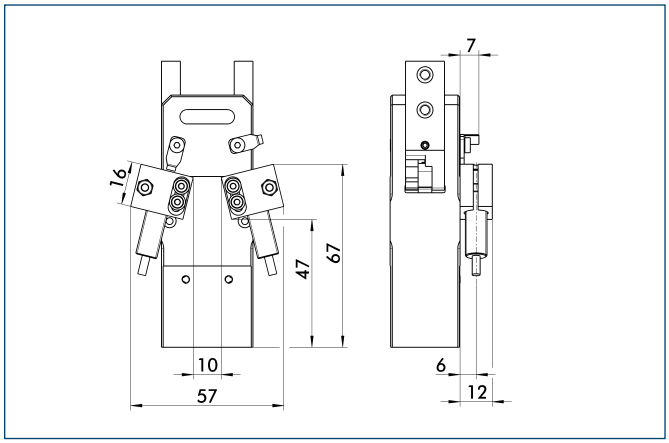


The mounting kit consists of brackets, control cams and appropriate fastening materials. Proximity switches have to be ordered separately.

| Description | ID |
|---|---|
| Mounting kit for proximity switch | |
| AS-PRG 34-IN80 | **0304133** |

## Inductive proximity switches

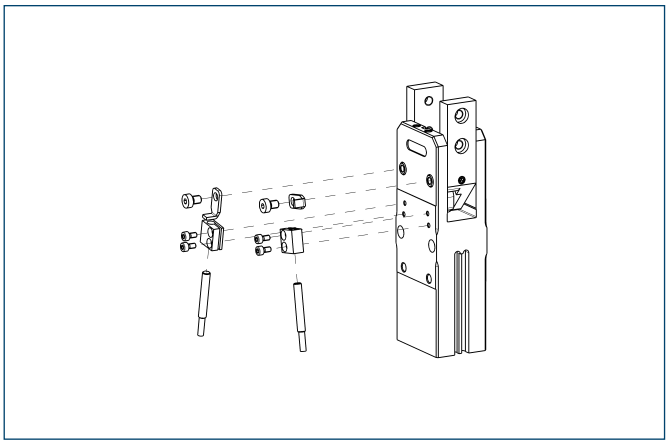

End position monitoring mounted with mounting kit

| Description | ID | Recommended product |
|---|---|---|
| Mounting kit for proximity switch | | |
| AS-PRG 34-IN40 | **0303622** | |
| Inductive proximity switches | | |
| IN 40-S-M8 | **0301474** | • |
| IN 40-S-M12 | **0301574** | |
| INK 40-S | **0301555** | |
| IN 40-S-M5-PNP | **0301491** | |
| IN 40-S-M5-NPN | **0301492** | |

ⓘ Two sensors (closer/NO) are required for each gripper, plus extension cables as an option.
ⓘ Please note the minimum permitted bending radii for the sensor cables, which are generally 35 mm.

## Inductive proximity switches

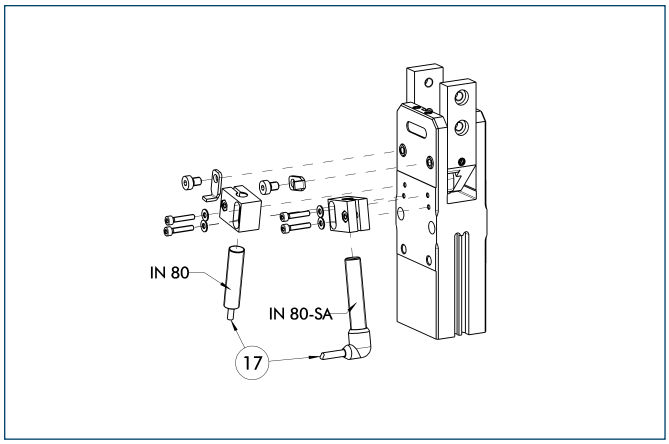


⑰ Cable outlet

End position monitoring mounted with mounting kit

| Description | ID | Recommended product |
|---|---|---|
| Mounting kit for proximity switch | | |
| AS-PRG 34-IN80 | **0304133** | |
| Inductive proximity switches | | |
| IN 80-S-M8 | **0301478** | • |
| IN 80-S-M12 | **0301578** | |
| INK 80-S | **0301550** | |
| Inductive proximity switch with lateral outlet | | |
| IN 80-S-M12-SA | **0301587** | |
| IN 80-S-M8-SA | **0301483** | • |
| INK 80-S-SA | **0301566** | |

ⓘ Two sensors (closer/NO) are required for each gripper, plus extension cables as an option.
ⓘ Please note the minimum permitted bending radii for the sensor cables, which are generally 35 mm.

You can find more detailed information and individual parts of the above-mentioned accessories in the “Accessories” catalog section.

# PRG 42

**Pneumatic • 2-Finger Radial Gripper • Universal Gripper**



## Gripping force, O.D. gripping

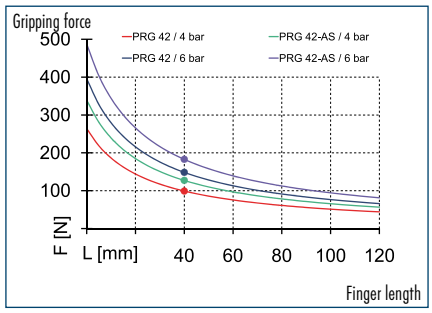


## Maximum admissible inertia J

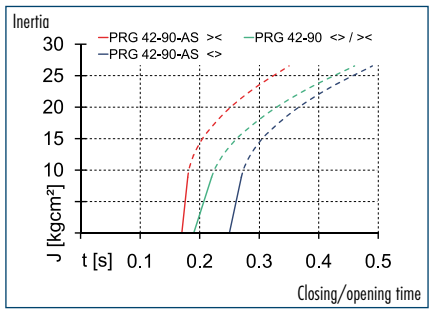


## Finger load

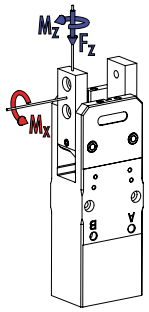


- $M_x$ max. 7.50 Nm
- $M_z$ max. 2.00 Nm
- $F_z$ max. 300.0 N

ⓘ The indicated moments and forces are statical values, apply for each base jaw and should not appear simultaneously. If the maximum admissible finger weight is exceeded, throttling is necessary in order to ensure a smooth jaw motion without jerks or bounces. The life-time may reduce.

## Technical data

| Description | | PRG 42-30 | PRG 42-30-AS | PRG 42-60 | PRG 42-60-AS | PRG 42-90 | PRG 42-90-AS |
|---|---|---|---|---|---|---|---|
| **ID** | | **0303653** | **0303663** | **0303693** | **0303703** | **0303673** | **0303683** |
| Opening angle per jaw | [°] | 30 | 30 | 60 | 60 | 90 | 90 |
| Closed angle per jaw up to | [°] | 4 | 4 | 4 | 4 | 4 | 4 |
| Closing moment | [Nm] | 9.5 | 11.7 | 9.5 | 11.7 | 9.5 | 11.7 |
| Spring-actuated closing moment | [Nm] | | 2.2 | | 2.2 | | 2.2 |
| Weight | [kg] | 0.41 | 0.43 | 0.41 | 0.43 | 0.41 | 0.43 |
| Recommended workpiece weight | [kg] | 0.76 | 0.93 | 0.76 | 0.93 | 0.76 | 0.93 |
| Air consumption per double stroke | [cm³] | 29 | 29 | 34 | 34 | 39 | 39 |
| Min./max. operating pressure | [bar] | 2/8 | 4/6.5 | 2/8 | 4/6.5 | 2/8 | 4/6.5 |
| Nominal operating pressure | [bar] | 6 | 6 | 6 | 6 | 6 | 6 |
| Closing time | [s] | 0.06 | 0.06 | 0.13 | 0.11 | 0.19 | 0.17 |
| Opening time | [s] | 0.06 | 0.08 | 0.13 | 0.17 | 0.19 | 0.25 |
| Max. permitted finger length | [mm] | 80 | 80 | 80 | 80 | 80 | 80 |
| Max. mass moment of inertia per jaw | [kgcm²] | 8.85 | 8.85 | 8.85 | 8.85 | 8.85 | 8.85 |
| IP class | | 20 | 20 | 20 | 20 | 20 | 20 |
| Min./max. ambient temperature | [°C] | -10/90 | -10/90 | -10/90 | -10/90 | -10/90 | -10/90 |
| Repeat accuracy | [mm] | 0.05 | 0.05 | 0.05 | 0.05 | 0.05 | 0.05 |
| **OPTIONS and their characteristics** | | | | | | | |
| High-temperature version | | **39303653** | **39303663** | **39303693** | **39303703** | **39303673** | **39303683** |
| Min./max. ambient temperature | [°C] | -10/130 | -10/130 | -10/130 | -10/130 | -10/130 | -10/130 |

ⓘ The unit can be actuated without an external customer-specific throttling at the given value of max. mass moment of inertia per jaw. In case of higher mass moments of inertia, an additional throttling is possible (see diagram). The curve applies for 90° versions. For other versions the curve must be parallely off-set according to the opening and closing times.

## Main view

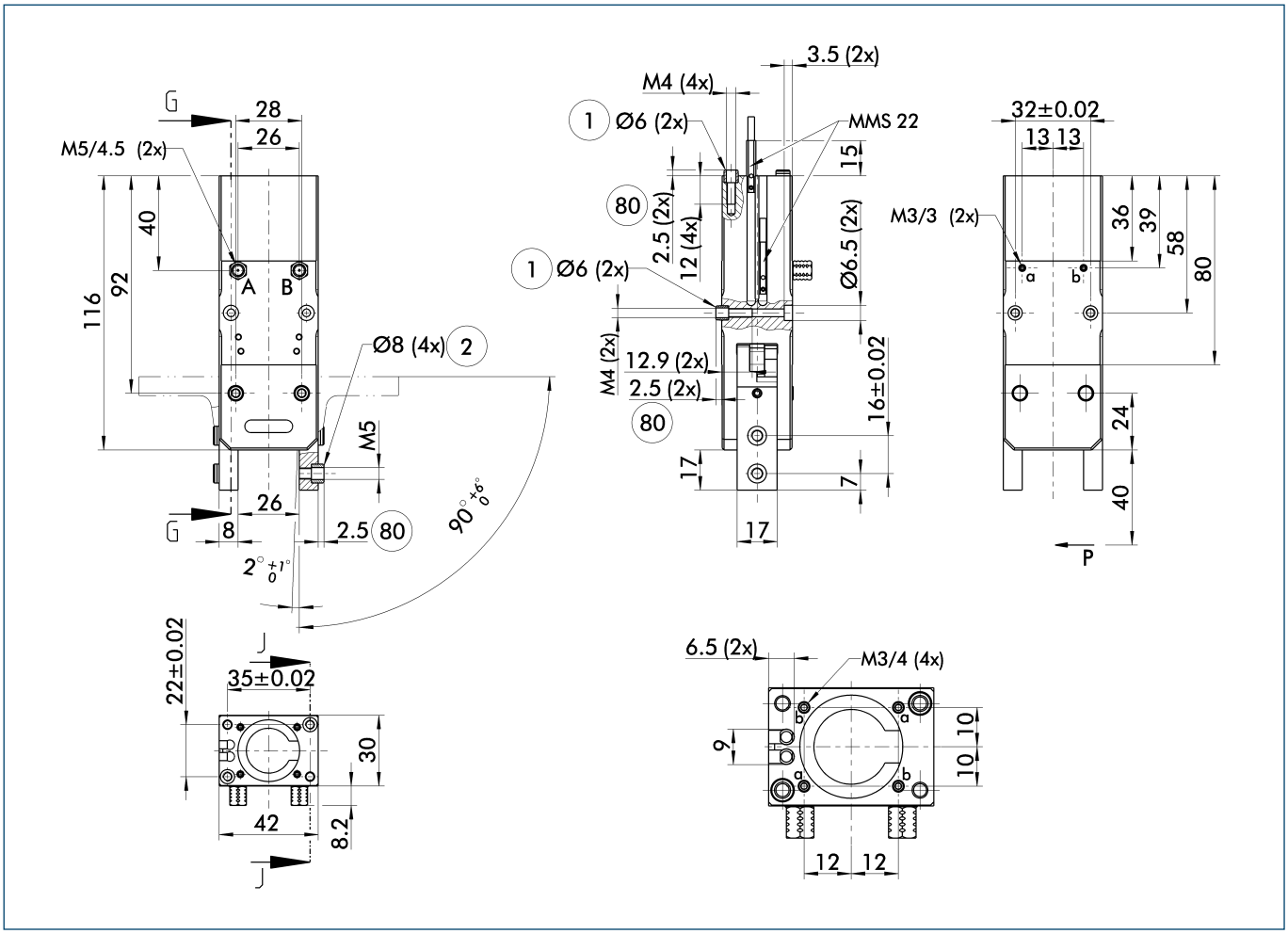


The drawing shows the gripper in the basic version with closed jaws, the dimensions do not include the options described below.

ⓘ The SDV-P pressure maintenance valve can also be used for I.D. or O.D. gripping alternatively or in addition to the spring-loaded, mechanical gripping force maintenance device (see "Accessories" catalog section).

A, a Main/direct connection, gripper opening
B, b Main/direct connection, gripper closing
① Gripper connection
② Finger connection
(80) Depth of the centering sleeve hole in the matching part

## Hose-free direct connection

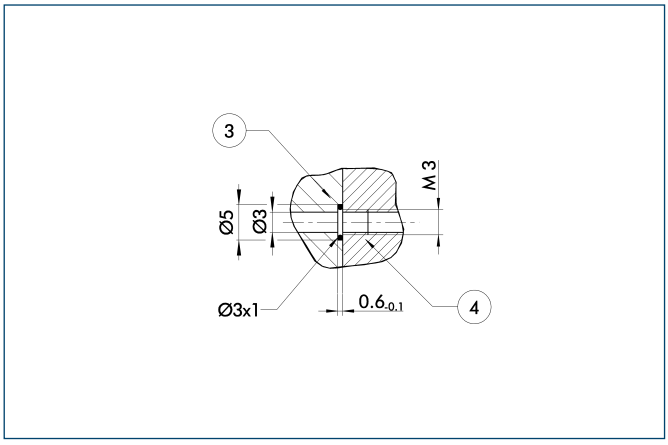


③ Adapter
④ Gripper

The direct connection is used for supplying compressed air without hoses. Instead, the pressure medium is fed through bore-holes in the mounting plate.

## Programmable magnetic switch

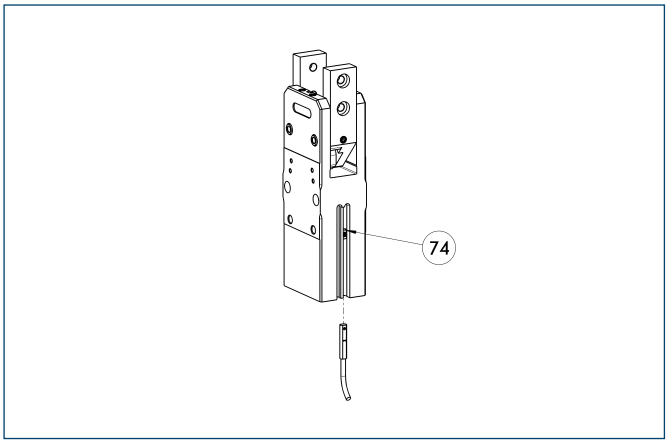


74 Stop for MMS-P

Position monitoring with two programmable positions per sensor. The end position monitoring is mounted in the C-slot.

| Description | ID | Recommended product |
|---|---|---|
| Programmable magnetic switch | | |
| MMS-P 22-S-M8-PNP | **0301370** | • |
| MMSK-P 22-S-PNP | **0301371** | |
| Connection cables | | |
| KA BG08-L 4P-0500 | **0307767** | |
| KA BG08-L 4P-1000 | **0307768** | |
| KA BW08-L 4P-0500 | **0307765** | |
| KA BW08-L 4P-1000 | **0307766** | |
| Sensor Distributor | | |
| V2-M8-4P-2XM8-3P | **0301380** | |

ⓘ Please note the minimum permitted bending radii for the sensor cables, which are generally 35 mm.

ⓘ Per gripper one sensor (closer/NO) is required, optionally a cable extension.

## Electronic magnetic switches

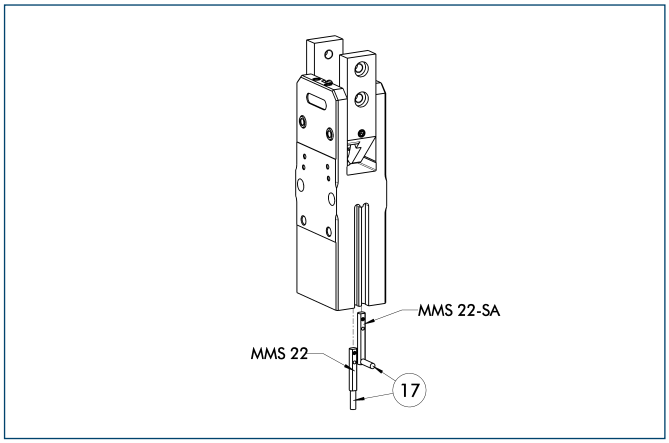


17 Cable outlet

End position monitoring for mounting in the C-slot

| Description | ID | Recommended product |
|---|---|---|
| Electronic magnetic switches | | |
| MMS 22-S-M5-PNP | **0301438** | |
| MMS 22-S-M5-NPN | **0301439** | |
| MMS 22-S-M8-PNP | **0301432** | • |
| MMS 22-S-M8-NPN | **0301433** | |
| MMSK 22-S-PNP | **0301434** | |
| MMSK 22-S-NPN | **0301435** | |
| Electronic magnetic switches with lateral cable outlet | | |
| MMS 22-S-M5-PNP-SA | **0301448** | |
| MMS 22-S-M5-NPN-SA | **0301449** | |
| MMS 22-S-M8-PNP-SA | **0301442** | • |
| MMS 22-S-M8-NPN-SA | **0301443** | |
| MMSK 22-S-PNP-SA | **0301444** | |
| MMSK 22-S-NPN-SA | **0301445** | |
| Reed Switches | | |
| RMS 22-S-M8 | **0377720** | • |
| Connection cables | | |
| KA BG05-L 3P-0300 | **0301652** | |
| KA BG08-L 3P-0300-PNP | **0301622** | |
| KA BG08-L 3P-0500-PNP | **0301623** | |
| KA BW05-L 3P-0300 | **0301650** | |
| KA BW08-L 3P-0300-NPN | **0301602** | |
| KA BW08-L 3P-0300-PNP | **0301594** | |
| KA BW08-L 3P-0500-NPN | **9641116** | |
| KA BW08-L 3P-0500-PNP | **0301502** | |
| Cable extensions | | |
| KV BW08-SG08 3P-0030-PNP | **0301495** | |
| KV BW08-SG08 3P-0100-PNP | **0301496** | |
| KV BW08-SG08 3P-0200-PNP | **0301497** | |

ⓘ Two sensors (closer/NO) are required for each gripper, plus extension cables as an option.

ⓘ Please note the minimum permitted bending radii for the sensor cables, which are generally 35 mm.

You can find more detailed information and individual parts of the above-mentioned accessories in the “Accessories” catalog section.

## Mounting kit for proximity switch

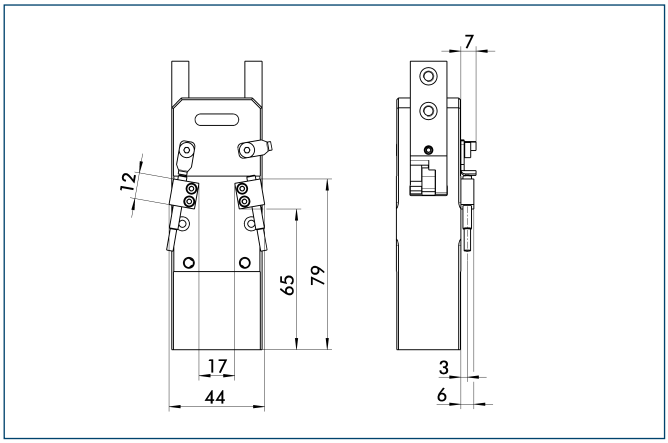


The mounting kit consists of brackets, control cams and appropriate fastening materials. Proximity switches have to be ordered separately.

| Description | ID |
|---|---|
| Mounting kit for proximity switch | |
| AS-PRG 42-IN40 | **0303623** |

## Mounting kit for proximity switch

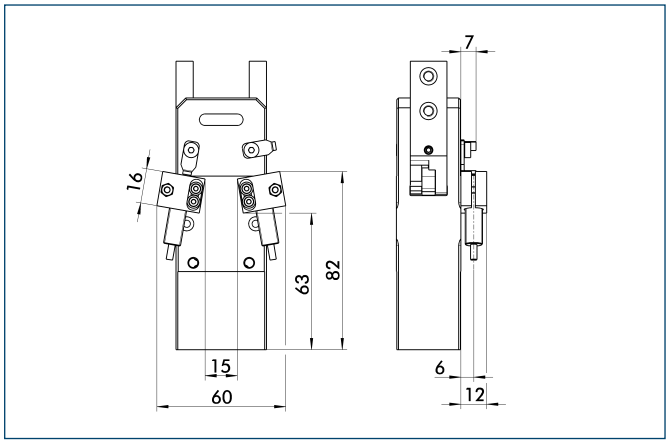


The mounting kit consists of brackets, control cams and appropriate fastening materials. Proximity switches have to be ordered separately.

| Description | ID |
|---|---|
| Mounting kit for proximity switch | |
| AS-PRG 42-IN80 | **0304133** |

## Inductive proximity switches

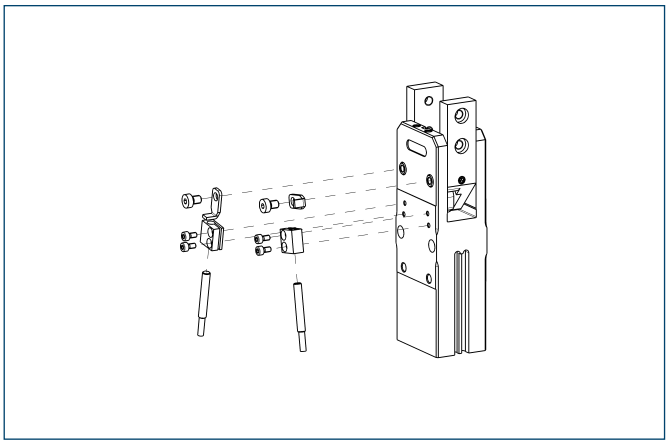

End position monitoring mounted with mounting kit

| Description | ID | Recommended product |
|---|---|---|
| Mounting kit for proximity switch | | |
| AS-PRG 42-IN40 | **0303623** | |
| Inductive proximity switches | | |
| IN 40-S-M8 | **0301474** | • |
| IN 40-S-M12 | **0301574** | |
| INK 40-S | **0301555** | |
| IN 40-S-M5-PNP | **0301491** | |
| IN 40-S-M5-NPN | **0301492** | |

ⓘ Two sensors (closer/NO) are required for each gripper, plus extension cables as an option.
ⓘ Please note the minimum permitted bending radii for the sensor cables, which are generally 35 mm.

## Inductive proximity switches

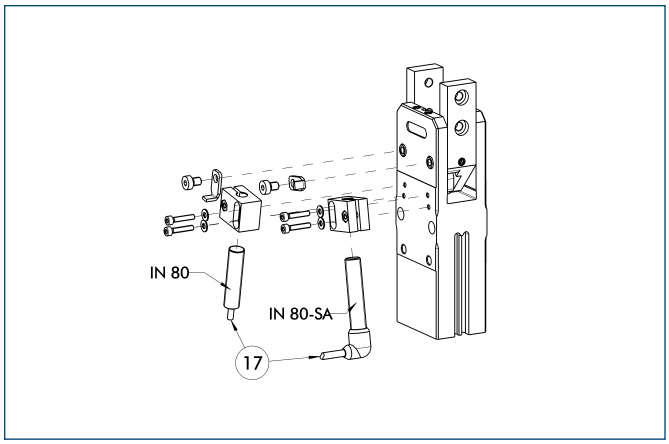


⑰ Cable outlet

End position monitoring mounted with mounting kit

| Description | ID | Recommended product |
|---|---|---|
| Mounting kit for proximity switch | | |
| AS-PRG 42-IN80 | **0304133** | |
| Inductive proximity switches | | |
| IN 80-S-M8 | **0301478** | • |
| IN 80-S-M12 | **0301578** | |
| INK 80-S | **0301550** | |
| Inductive proximity switch with lateral outlet | | |
| IN 80-S-M12-SA | **0301587** | |
| IN 80-S-M8-SA | **0301483** | • |
| INK 80-S-SA | **0301566** | |

ⓘ Two sensors (closer/NO) are required for each gripper, plus extension cables as an option.
ⓘ Please note the minimum permitted bending radii for the sensor cables, which are generally 35 mm.

You can find more detailed information and individual parts of the above-mentioned accessories in the “Accessories” catalog section.

# PRG 52

**Pneumatic • 2-Finger Radial Gripper • Universal Gripper**

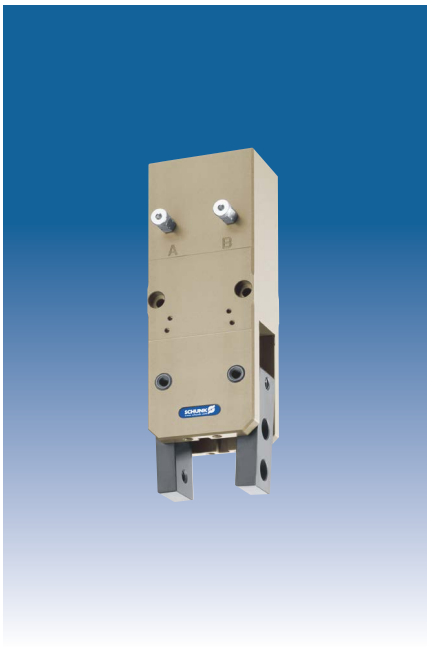

## Gripping force, O.D. gripping

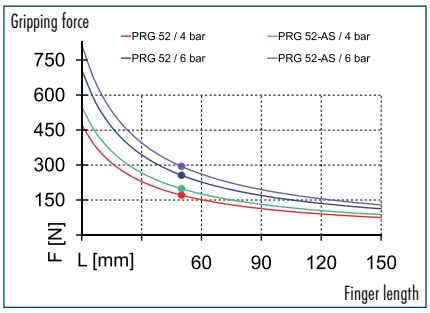


## Maximum admissible inertia J

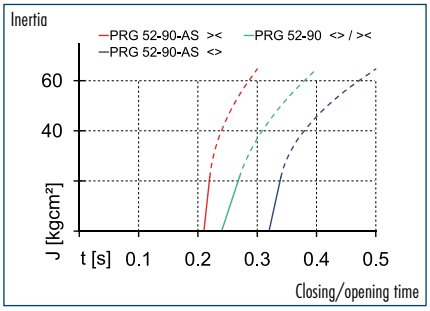


## Finger load

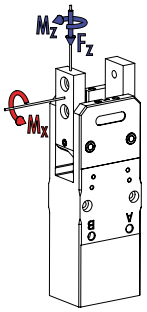


- $M_x$ max. 10.00 Nm
- $M_z$ max. 2.50 Nm
- $F_z$ max. 470.0 N

ⓘ The indicated moments and forces are statical values, apply for each base jaw and should not appear simultaneously. If the maximum admissible finger weight is exceeded, throttling is necessary in order to ensure a smooth jaw motion without jerks or bounces. The life-time may reduce.

## Technical data

| Description | | PRG 52-30 | PRG 52-30-AS | PRG 52-60 | PRG 52-60-AS | PRG 52-90 | PRG 52-90-AS |
|---|---|---|---|---|---|---|---|
| **ID** | | **0303654** | **0303664** | **0303694** | **0303704** | **0303674** | **0303684** |
| Opening angle per jaw | [°] | 30 | 30 | 60 | 60 | 90 | 90 |
| Closed angle per jaw up to | [°] | 4 | 4 | 4 | 4 | 4 | 4 |
| Closing moment | [Nm] | 20 | 23 | 20 | 23 | 20 | 23 |
| Spring-actuated closing moment | [Nm] | | 3 | | 3 | | 3 |
| Weight | [kg] | 0.77 | 0.8 | 0.76 | 0.8 | 0.75 | 0.79 |
| Recommended workpiece weight | [kg] | 1.3 | 1.5 | 1.3 | 1.5 | 1.3 | 1.5 |
| Air consumption per double stroke | [cm³] | 52 | 52 | 61 | 61 | 72 | 72 |
| Min./max. operating pressure | [bar] | 2/8 | 4/6.5 | 2/8 | 4/6.5 | 2/8 | 4/6.5 |
| Nominal operating pressure | [bar] | 6 | 6 | 6 | 6 | 6 | 6 |
| Closing time | [s] | 0.08 | 0.07 | 0.16 | 0.14 | 0.24 | 0.21 |
| Opening time | [s] | 0.08 | 0.11 | 0.16 | 0.21 | 0.24 | 0.32 |
| Max. permitted finger length | [mm] | 100 | 100 | 100 | 100 | 100 | 100 |
| Max. mass moment of inertia per jaw | [kgcm²] | 21.55 | 21.55 | 21.55 | 21.55 | 21.55 | 21.55 |
| IP class | | 20 | 20 | 20 | 20 | 20 | 20 |
| Min./max. ambient temperature | [°C] | -10/90 | -10/90 | -10/90 | -10/90 | -10/90 | -10/90 |
| Repeat accuracy | [mm] | 0.05 | 0.05 | 0.05 | 0.05 | 0.05 | 0.05 |
| **OPTIONS and their characteristics** | | | | | | | |
| High-temperature version | | **39303654** | **39303664** | **39303694** | **39303704** | **39303674** | **39303684** |
| Min./max. ambient temperature | [°C] | -10/130 | -10/130 | -10/130 | -10/130 | -10/130 | -10/130 |

ⓘ The unit can be actuated without an external customer-specific throttling at the given value of max. mass moment of inertia per jaw. In case of higher mass moments of inertia, an additional throttling is possible (see diagram). The curve applies for 90° versions. For other versions the curve must be parallelly off-set according to the opening and closing times.

## Main view

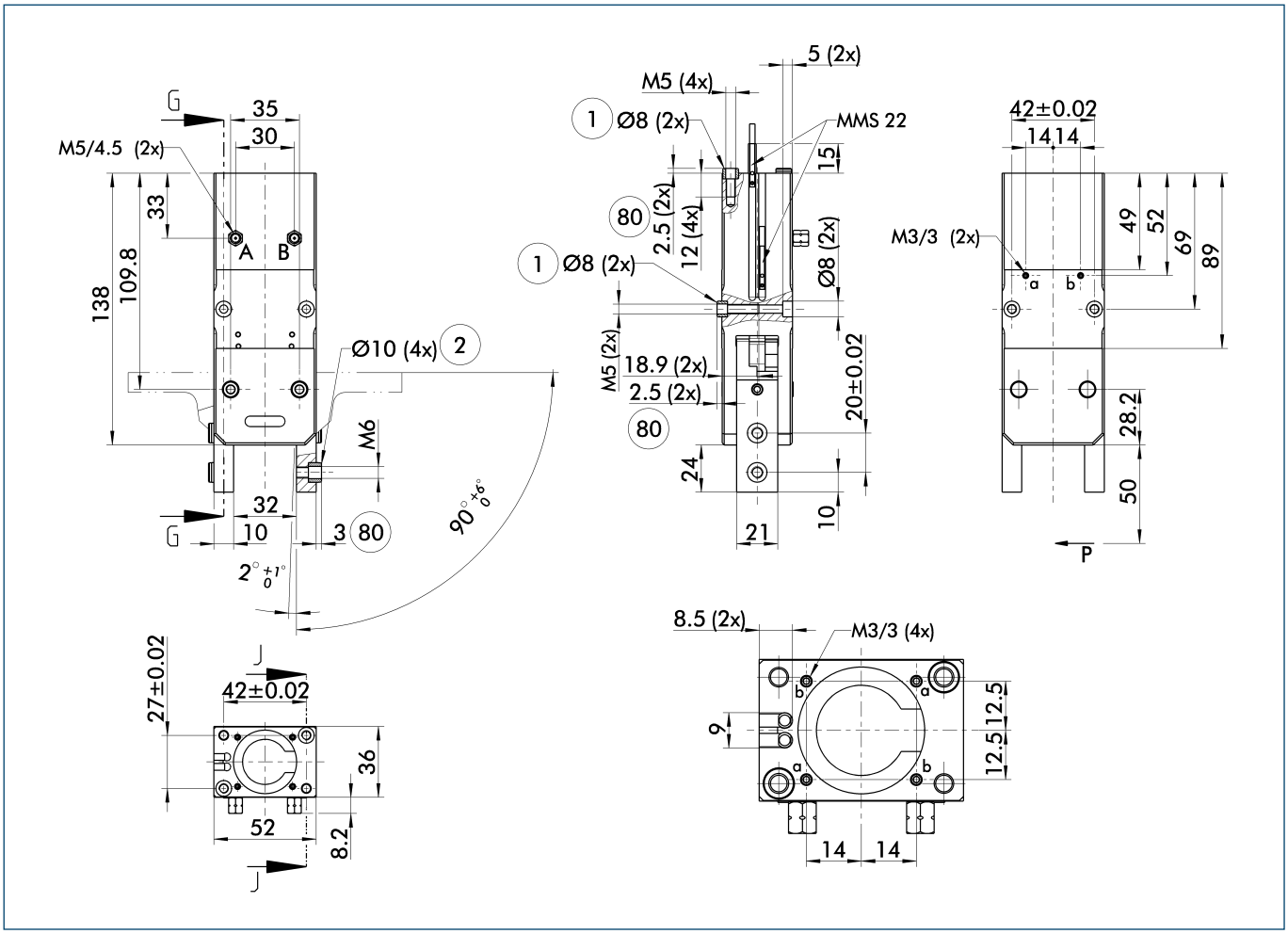


The drawing shows the gripper in the basic version with closed jaws, the dimensions do not include the options described below.

ⓘ The SDV-P pressure maintenance valve can also be used for I.D. or O.D. gripping alternatively or in addition to the spring-loaded, mechanical gripping force maintenance device (see "Accessories" catalog section).

A, a Main/direct connection, gripper opening
B, b Main/direct connection, gripper closing
① Gripper connection
② Finger connection
(80) Depth of the centering sleeve hole in the matching part

## Hose-free direct connection

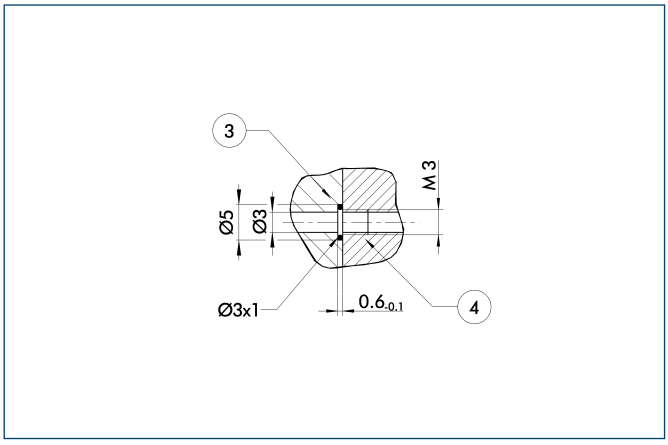


③ Adapter
④ Gripper

The direct connection is used for supplying compressed air without hoses. Instead, the pressure medium is fed through bore-holes in the mounting plate.

## Programmable magnetic switch

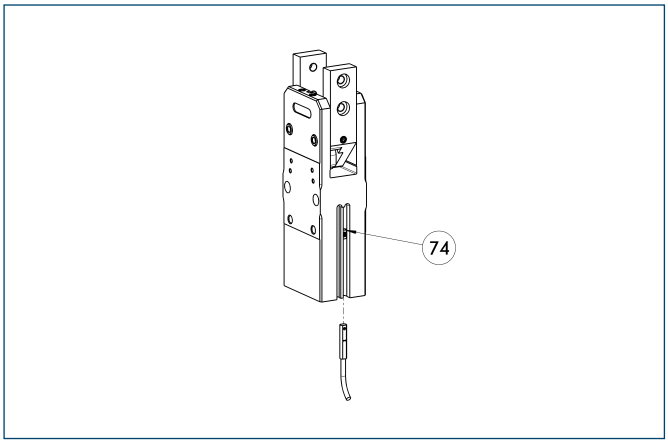


(74) Stop for MMS-P

Position monitoring with two programmable positions per sensor. The end position monitoring is mounted in the C-slot.

| Description | ID | Recommended product |
|---|---|---|
| Programmable magnetic switch | | |
| MMS-P 22-S-M8-PNP | **0301370** | • |
| MMSK-P 22-S-PNP | **0301371** | |
| Connection cables | | |
| KA BG08-L 4P-0500 | **0307767** | |
| KA BG08-L 4P-1000 | **0307768** | |
| KA BW08-L 4P-0500 | **0307765** | |
| KA BW08-L 4P-1000 | **0307766** | |
| Sensor Distributor | | |
| V2-M8-4P-2XM8-3P | **0301380** | |

ⓘ Please note the minimum permitted bending radii for the sensor cables, which are generally 35 mm.

ⓘ Per gripper one sensor (closer/NO) is required, optionally a cable extension.

## Electronic magnetic switches

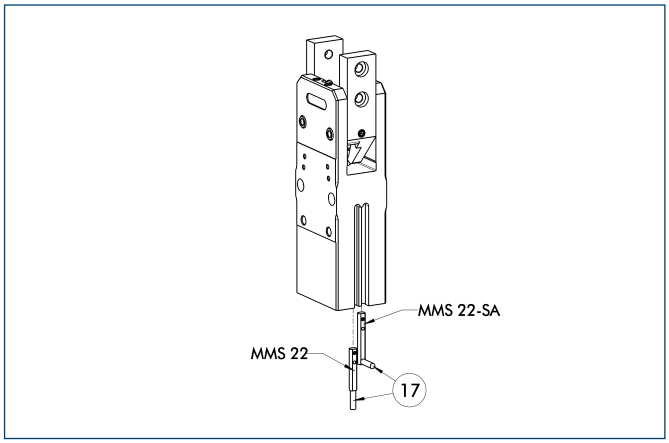


(17) Cable outlet

End position monitoring for mounting in the C-slot

| Description | ID | Recommended product |
|---|---|---|
| Electronic magnetic switches | | |
| MMS 22-S-M5-PNP | **0301438** | |
| MMS 22-S-M5-NPN | **0301439** | |
| MMS 22-S-M8-PNP | **0301432** | • |
| MMS 22-S-M8-NPN | **0301433** | |
| MMSK 22-S-PNP | **0301434** | |
| MMSK 22-S-NPN | **0301435** | |
| Electronic magnetic switches with lateral cable outlet | | |
| MMS 22-S-M5-PNP-SA | **0301448** | |
| MMS 22-S-M5-NPN-SA | **0301449** | |
| MMS 22-S-M8-PNP-SA | **0301442** | • |
| MMS 22-S-M8-NPN-SA | **0301443** | |
| MMSK 22-S-PNP-SA | **0301444** | |
| MMSK 22-S-NPN-SA | **0301445** | |
| Reed Switches | | |
| RMS 22-S-M8 | **0377720** | • |
| Connection cables | | |
| KA BG05-L 3P-0300 | **0301652** | |
| KA BG08-L 3P-0300-PNP | **0301622** | |
| KA BG08-L 3P-0500-PNP | **0301623** | |
| KA BW05-L 3P-0300 | **0301650** | |
| KA BW08-L 3P-0300-NPN | **0301602** | |
| KA BW08-L 3P-0300-PNP | **0301594** | |
| KA BW08-L 3P-0500-NPN | **9641116** | |
| KA BW08-L 3P-0500-PNP | **0301502** | |
| Cable extensions | | |
| KV BW08-SG08 3P-0030-PNP | **0301495** | |
| KV BW08-SG08 3P-0100-PNP | **0301496** | |
| KV BW08-SG08 3P-0200-PNP | **0301497** | |

ⓘ Two sensors (closer/NO) are required for each gripper, plus extension cables as an option.

ⓘ Please note the minimum permitted bending radii for the sensor cables, which are generally 35 mm.

You can find more detailed information and individual parts of the above-mentioned accessories in the “Accessories” catalog section.

## Mounting kit for proximity switch

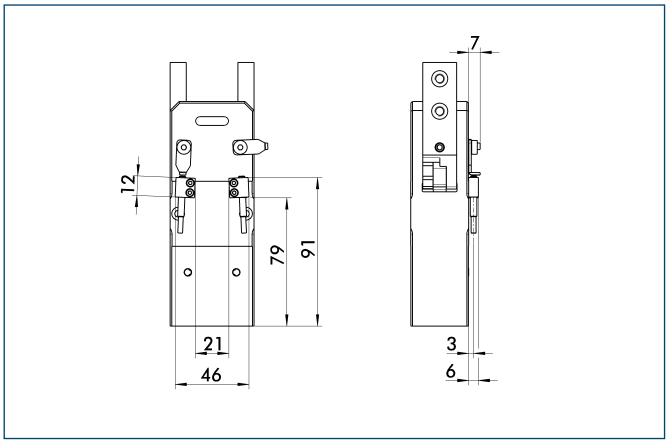


The mounting kit consists of brackets, control cams and appropriate fastening materials. Proximity switches have to be ordered separately.

| Description | ID |
|---|---|
| Mounting kit for proximity switch | |
| AS-PRG 52-IN40 | **0303624** |

## Mounting kit for proximity switch

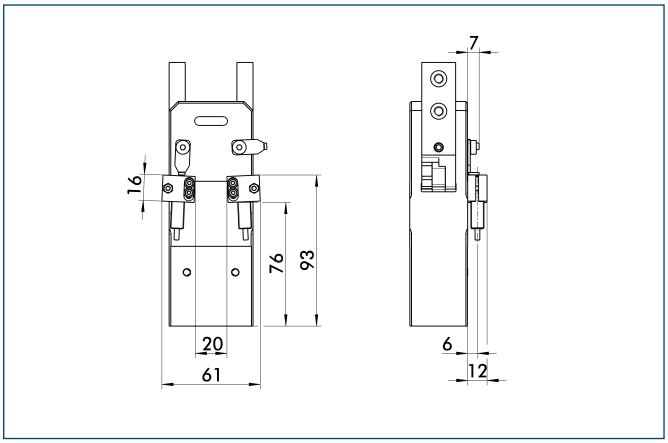


The mounting kit consists of brackets, control cams and appropriate fastening materials. Proximity switches have to be ordered separately.

| Description | ID |
|---|---|
| Mounting kit for proximity switch | |
| AS-PRG 52-IN80 | **0304135** |

## Inductive proximity switches

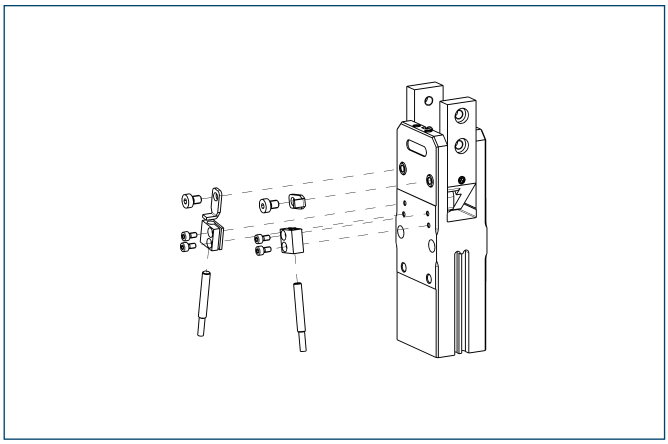

End position monitoring mounted with mounting kit

| Description | ID | Recommended product |
|---|---|---|
| Mounting kit for proximity switch | | |
| AS-PRG 52-IN40 | **0303624** | |
| Inductive proximity switches | | |
| IN 40-S-M8 | **0301474** | • |
| IN 40-S-M12 | **0301574** | |
| INK 40-S | **0301555** | |
| IN 40-S-M5-PNP | **0301491** | |
| IN 40-S-M5-NPN | **0301492** | |

ⓘ Two sensors (closer/NO) are required for each gripper, plus extension cables as an option.
ⓘ Please note the minimum permitted bending radii for the sensor cables, which are generally 35 mm.

## Inductive proximity switches

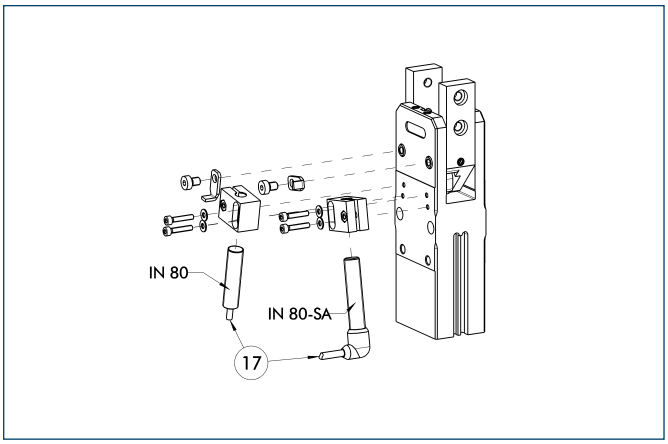


⑰ Cable outlet

End position monitoring mounted with mounting kit

| Description | ID | Recommended product |
|---|---|---|
| Mounting kit for proximity switch | | |
| AS-PRG 52-IN80 | **0304135** | |
| Inductive proximity switches | | |
| IN 80-S-M8 | **0301478** | • |
| IN 80-S-M12 | **0301578** | |
| INK 80-S | **0301550** | |
| Inductive proximity switch with lateral outlet | | |
| IN 80-S-M12-SA | **0301587** | |
| IN 80-S-M8-SA | **0301483** | • |
| INK 80-S-SA | **0301566** | |

ⓘ Two sensors (closer/NO) are required for each gripper, plus extension cables as an option.
ⓘ Please note the minimum permitted bending radii for the sensor cables, which are generally 35 mm.

You can find more detailed information and individual parts of the above-mentioned accessories in the “Accessories” catalog section.

# PRG 64

**Pneumatic • 2-Finger Radial Gripper • Universal Gripper**



## Gripping force, O.D. gripping

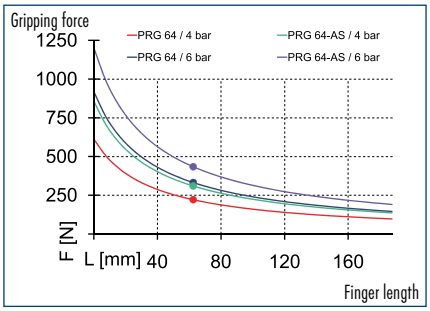


## Maximum admissible inertia J

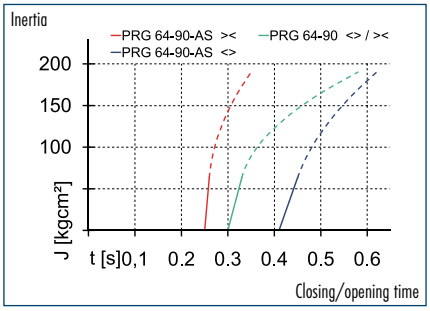


## Finger load

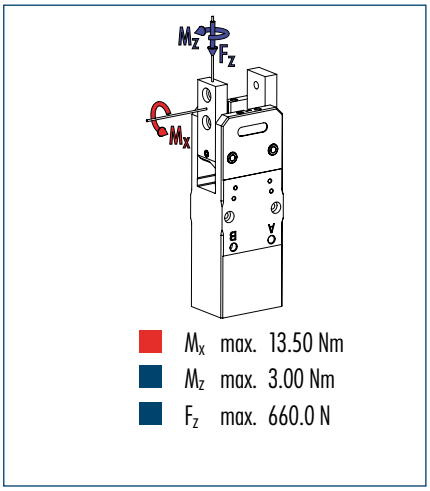


ⓘ The indicated moments and forces are statical values, apply for each base jaw and should not appear simultaneously. If the maximum admissible finger weight is exceeded, throttling is necessary in order to ensure a smooth jaw motion without jerks or bounces. The life-time may reduce.

## Technical data

| Description | | PRG 64-30 | PRG 64-30-AS | PRG 64-60 | PRG 64-60-AS | PRG 64-90 | PRG 64-90-AS |
|---|---|---|---|---|---|---|---|
| **ID** | | **0303655** | **0303665** | **0303695** | **0303705** | **0303675** | **0303685** |
| Opening angle per jaw | [°] | 30 | 30 | 60 | 60 | 90 | 90 |
| Closed angle per jaw up to | [°] | 4 | 4 | 4 | 4 | 4 | 4 |
| Closing moment | [Nm] | 32.5 | 42.5 | 32.5 | 42.5 | 32.5 | 42.5 |
| Spring-actuated closing moment | [Nm] | | 10 | | 10 | | 10 |
| Weight | [kg] | 1.35 | 1.42 | 1.34 | 1.41 | 1.33 | 1.4 |
| Recommended workpiece weight | [kg] | 1.69 | 2.21 | 1.69 | 2.21 | 1.69 | 2.21 |
| Air consumption per double stroke | [cm³] | 88 | 88 | 102 | 102 | 120 | 120 |
| Min./max. operating pressure | [bar] | 2/8 | 4/6.5 | 2/8 | 4/6.5 | 2/8 | 4/6.5 |
| Nominal operating pressure | [bar] | 6 | 6 | 6 | 6 | 6 | 6 |
| Closing time | [s] | 0.1 | 0.08 | 0.2 | 0.17 | 0.3 | 0.25 |
| Opening time | [s] | 0.1 | 0.14 | 0.2 | 0.27 | 0.3 | 0.41 |
| Max. permitted finger length | [mm] | 125 | 125 | 125 | 125 | 125 | 125 |
| Max. mass moment of inertia per jaw | [kgcm²] | 63.37 | 63.37 | 63.37 | 63.37 | 63.37 | 63.37 |
| IP class | | 20 | 20 | 20 | 20 | 20 | 20 |
| Min./max. ambient temperature | [°C] | -10/90 | -10/90 | -10/90 | -10/90 | -10/90 | -10/90 |
| Repeat accuracy | [mm] | 0.05 | 0.05 | 0.05 | 0.05 | 0.05 | 0.05 |
| **OPTIONS and their characteristics** | | | | | | | |
| High-temperature version | | **39303655** | **39303665** | **39303695** | **39303705** | **39303675** | **39303685** |
| Min./max. ambient temperature | [°C] | -10/130 | -10/130 | -10/130 | -10/130 | -10/130 | -10/130 |

ⓘ The unit can be actuated without an external customer-specific throttling at the given value of max. mass moment of inertia per jaw. In case of higher mass moments of inertia, an additional throttling is possible (see diagram). The curve applies for 90° versions. For other versions the curve must be parallely off-set according to the opening and closing times.

## Main view

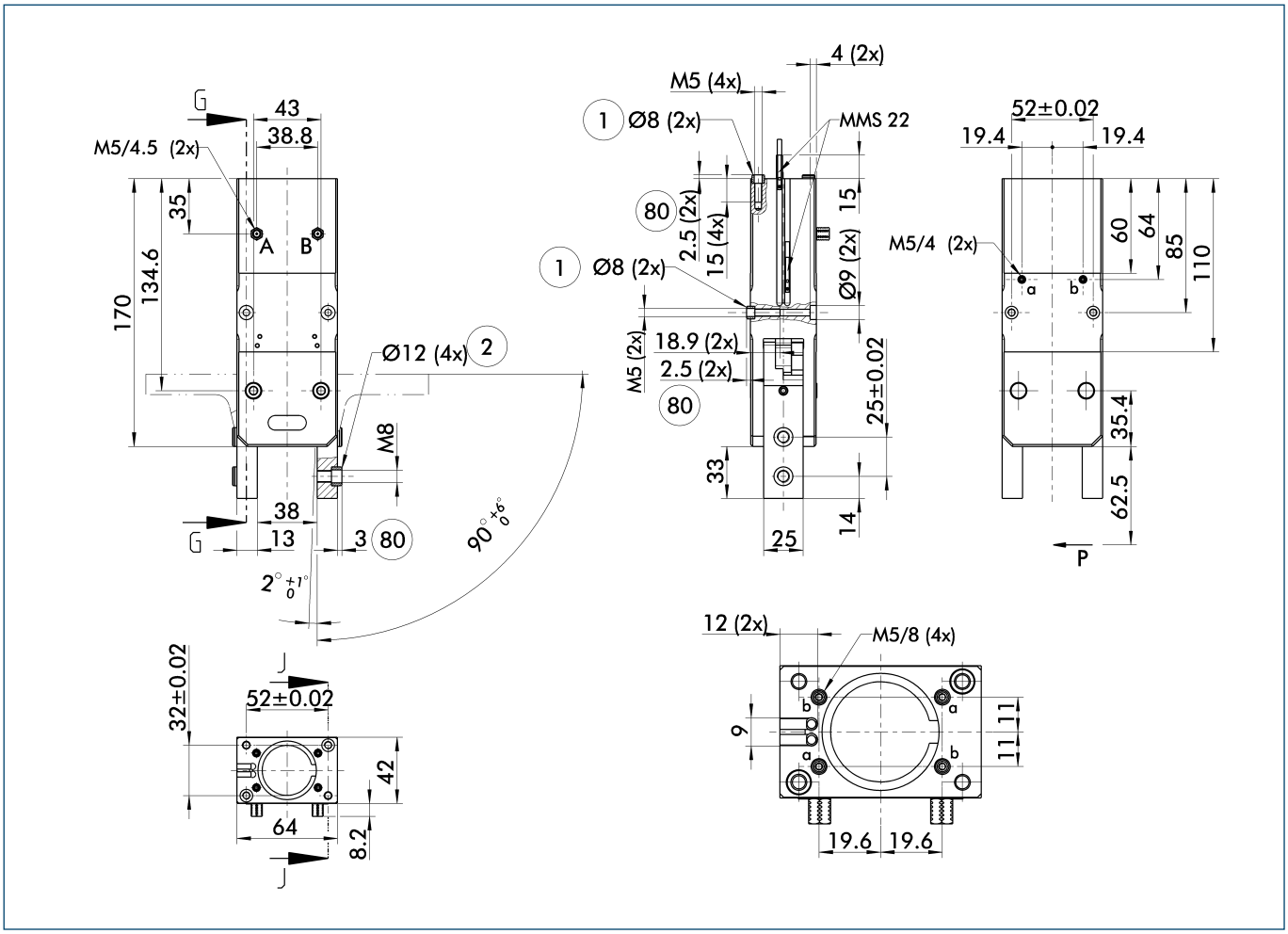


The drawing shows the gripper in the basic version with closed jaws, the dimensions do not include the options described below.

ⓘ The SDV-P pressure maintenance valve can also be used for I.D. or O.D. gripping alternatively or in addition to the spring-loaded, mechanical gripping force maintenance device (see "Accessories" catalog section).

A, a Main/direct connection, gripper opening
B, b Main/direct connection, gripper closing
① Gripper connection
② Finger connection
(80) Depth of the centering sleeve hole in the matching part

## Hose-free direct connection

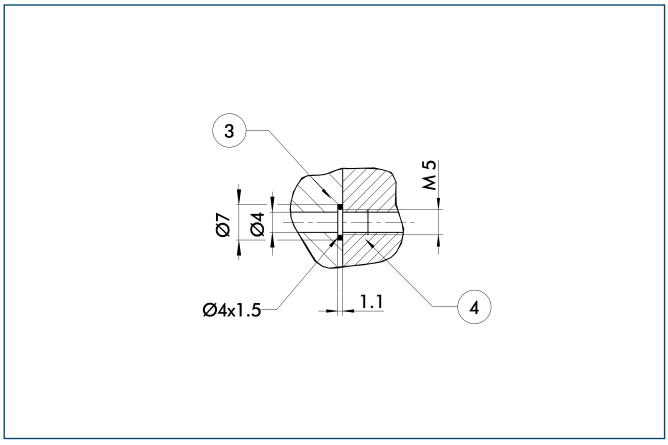


③ Adapter
④ Gripper

The direct connection is used for supplying compressed air without hoses. Instead, the pressure medium is fed through bore-holes in the mounting plate.

## Programmable magnetic switch

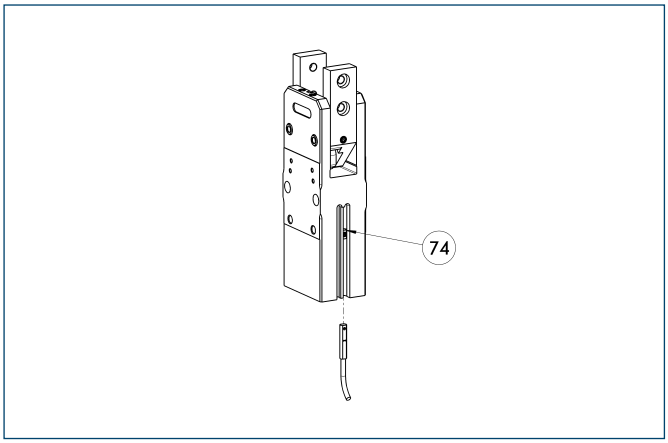


(74) Stop for MMS-P

Position monitoring with two programmable positions per sensor. The end position monitoring is mounted in the C-slot.

| Description | ID | Recommended product |
|---|---|---|
| Programmable magnetic switch | | |
| MMS-P 22-S-M8-PNP | **0301370** | • |
| MMSK-P 22-S-PNP | **0301371** | |
| Connection cables | | |
| KA BG08-L 4P-0500 | **0307767** | |
| KA BG08-L 4P-1000 | **0307768** | |
| KA BW08-L 4P-0500 | **0307765** | |
| KA BW08-L 4P-1000 | **0307766** | |
| Sensor Distributor | | |
| V2-M8-4P-2XM8-3P | **0301380** | |

ⓘ Please note the minimum permitted bending radii for the sensor cables, which are generally 35 mm.

ⓘ Per gripper one sensor (closer/NO) is required, optionally a cable extension.

## Electronic magnetic switches

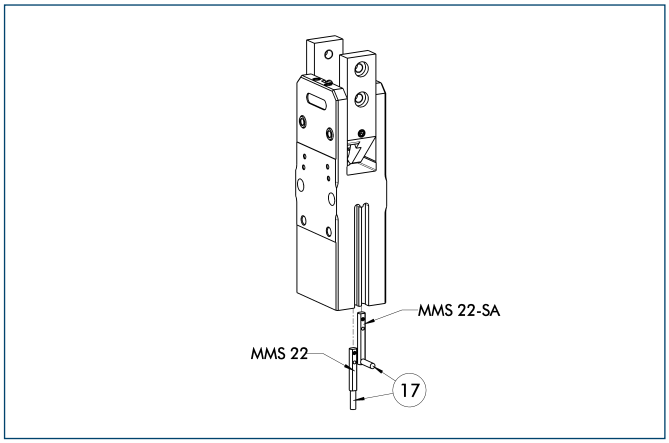


(17) Cable outlet

End position monitoring for mounting in the C-slot

| Description | ID | Recommended product |
|---|---|---|
| Electronic magnetic switches | | |
| MMS 22-S-M5-PNP | **0301438** | |
| MMS 22-S-M5-NPN | **0301439** | |
| MMS 22-S-M8-PNP | **0301432** | • |
| MMS 22-S-M8-NPN | **0301433** | |
| MMSK 22-S-PNP | **0301434** | |
| MMSK 22-S-NPN | **0301435** | |
| Electronic magnetic switches with lateral cable outlet | | |
| MMS 22-S-M5-PNP-SA | **0301448** | |
| MMS 22-S-M5-NPN-SA | **0301449** | |
| MMS 22-S-M8-PNP-SA | **0301442** | • |
| MMS 22-S-M8-NPN-SA | **0301443** | |
| MMSK 22-S-PNP-SA | **0301444** | |
| MMSK 22-S-NPN-SA | **0301445** | |
| Reed Switches | | |
| RMS 22-S-M8 | **0377720** | • |
| Connection cables | | |
| KA BG05-L 3P-0300 | **0301652** | |
| KA BG08-L 3P-0300-PNP | **0301622** | |
| KA BG08-L 3P-0500-PNP | **0301623** | |
| KA BW05-L 3P-0300 | **0301650** | |
| KA BW08-L 3P-0300-NPN | **0301602** | |
| KA BW08-L 3P-0300-PNP | **0301594** | |
| KA BW08-L 3P-0500-NPN | **9641116** | |
| KA BW08-L 3P-0500-PNP | **0301502** | |
| Cable extensions | | |
| KV BW08-SG08 3P-0030-PNP | **0301495** | |
| KV BW08-SG08 3P-0100-PNP | **0301496** | |
| KV BW08-SG08 3P-0200-PNP | **0301497** | |

ⓘ Two sensors (closer/NO) are required for each gripper, plus extension cables as an option.

ⓘ Please note the minimum permitted bending radii for the sensor cables, which are generally 35 mm.

You can find more detailed information and individual parts of the above-mentioned accessories in the “Accessories” catalog section.

## Mounting kit for proximity switch

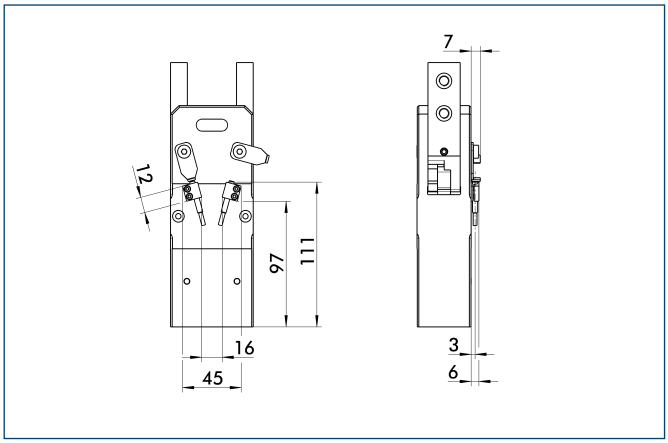


The mounting kit consists of brackets, control cams and appropriate fastening materials. Proximity switches have to be ordered separately.

| Description | ID |
|---|---|
| Mounting kit for proximity switch | |
| AS-PRG 64-IN40 | **0303625** |

## Mounting kit for proximity switch

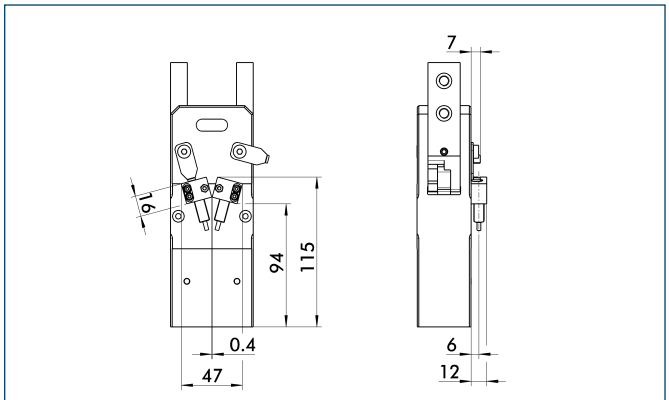


The mounting kit consists of brackets, control cams and appropriate fastening materials. Proximity switches have to be ordered separately.

| Description | ID |
|---|---|
| Mounting kit for proximity switch | |
| AS-PRG 64-IN80 | **0304136** |

## Inductive proximity switches

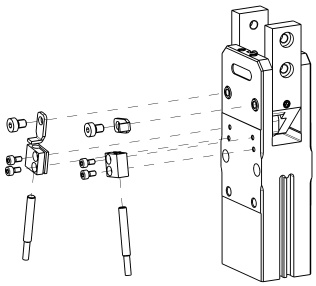

End position monitoring mounted with mounting kit

| Description | ID | Recommended product |
|---|---|---|
| Mounting kit for proximity switch | | |
| AS-PRG 64-IN40 | **0303625** | |
| Inductive proximity switches | | |
| IN 40-S-M8 | **0301474** | • |
| IN 40-S-M12 | **0301574** | |
| INK 40-S | **0301555** | |
| IN 40-S-M5-PNP | **0301491** | |
| IN 40-S-M5-NPN | **0301492** | |

ⓘ Two sensors (closer/NO) are required for each gripper, plus extension cables as an option.

ⓘ Please note the minimum permitted bending radii for the sensor cables, which are generally 35 mm.

## Inductive proximity switches

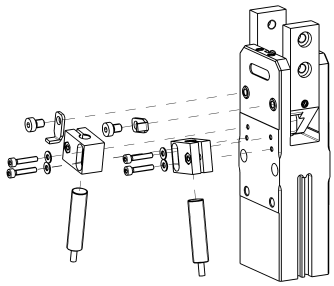

End position monitoring mounted with mounting kit

| Description | ID | Recommended product |
|---|---|---|
| Mounting kit for proximity switch | | |
| AS-PRG 64-IN80 | **0304136** | |
| Inductive proximity switches | | |
| IN 80-S-M8 | **0301478** | • |
| IN 80-S-M12 | **0301578** | |
| INK 80-S | **0301550** | |

ⓘ Two sensors (closer/NO) are required for each gripper, plus extension cables as an option.

ⓘ Please note the minimum permitted bending radii for the sensor cables, which are generally 35 mm.

You can find more detailed information and individual parts of the above-mentioned accessories in the “Accessories” catalog section.

# PRG 80

**Pneumatic • 2-Finger Radial Gripper • Universal Gripper**



## Gripping force, O.D. gripping

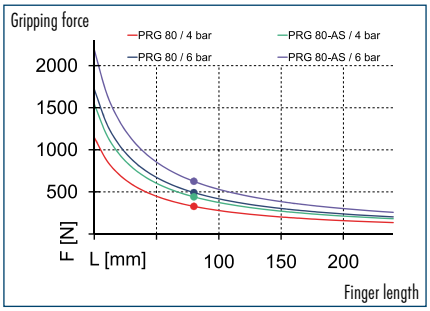


## Maximum admissible inertia J

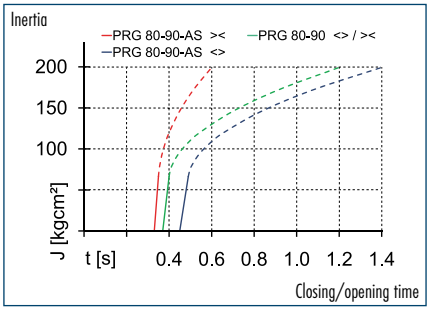


## Finger load

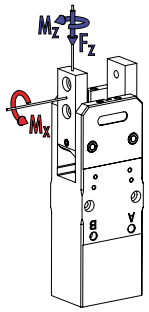


- $M_x$ max. 17.50 Nm
- $M_z$ max. 8.00 Nm
- $F_z$ max. 940.0 N

ⓘ The indicated moments and forces are statical values, apply for each base jaw and should not appear simultaneously. If the maximum admissible finger weight is exceeded, throttling is necessary in order to ensure a smooth jaw motion without jerks or bounces. The life-time may reduce.

## Technical data

| Description | | PRG 80-30 | PRG 80-30-AS | PRG 80-60 | PRG 80-60-AS | PRG 80-90 | PRG 80-90-AS |
|---|---|---|---|---|---|---|---|
| **ID** | | **0303656** | **0303666** | **0303696** | **0303706** | **0303676** | **0303686** |
| Opening angle per jaw | [°] | 30 | 30 | 60 | 60 | 90 | 90 |
| Closed angle per jaw up to | [°] | 4 | 4 | 4 | 4 | 4 | 4 |
| Closing moment | [Nm] | 55 | 70 | 55 | 70 | 55 | 70 |
| Spring-actuated closing moment | [Nm] | | 15 | | 15 | | 15 |
| Weight | [kg] | 2.17 | 2.26 | 2.16 | 2.25 | 2.15 | 2.24 |
| Recommended workpiece weight | [kg] | 2.5 | 3.19 | 2.5 | 3.19 | 2.5 | 3.19 |
| Air consumption per double stroke | [cm³] | 128 | 128 | 143 | 143 | 160 | 160 |
| Min./max. operating pressure | [bar] | 2/8 | 4/6.5 | 2/8 | 4/6.5 | 2/8 | 4/6.5 |
| Nominal operating pressure | [bar] | 6 | 6 | 6 | 6 | 6 | 6 |
| Closing time | [s] | 0.12 | 0.11 | 0.25 | 0.22 | 0.37 | 0.33 |
| Opening time | [s] | 0.12 | 0.15 | 0.25 | 0.3 | 0.37 | 0.45 |
| Max. permitted finger length | [mm] | 160 | 160 | 160 | 160 | 160 | 160 |
| Max. mass moment of inertia per jaw | [kgcm²] | 66.44 | 66.44 | 66.44 | 66.44 | 66.44 | 66.44 |
| IP class | | 20 | 20 | 20 | 20 | 20 | 20 |
| Min./max. ambient temperature | [°C] | -10/90 | -10/90 | -10/90 | -10/90 | -10/90 | -10/90 |
| Repeat accuracy | [mm] | 0.1 | 0.1 | 0.1 | 0.1 | 0.1 | 0.1 |
| **OPTIONS and their characteristics** | | | | | | | |
| High-temperature version | | **39303656** | **39303666** | **39303696** | **39303706** | **39303676** | **39303686** |
| Min./max. ambient temperature | [°C] | -10/130 | -10/130 | -10/130 | -10/130 | -10/130 | -10/130 |

ⓘ The unit can be actuated without an external customer-specific throttling at the given value of max. mass moment of inertia per jaw. In case of higher mass moments of inertia, an additional throttling is possible (see diagram). The curve applies for 90° versions. For other versions the curve must be parallelly off-set according to the opening and closing times.

## Main view

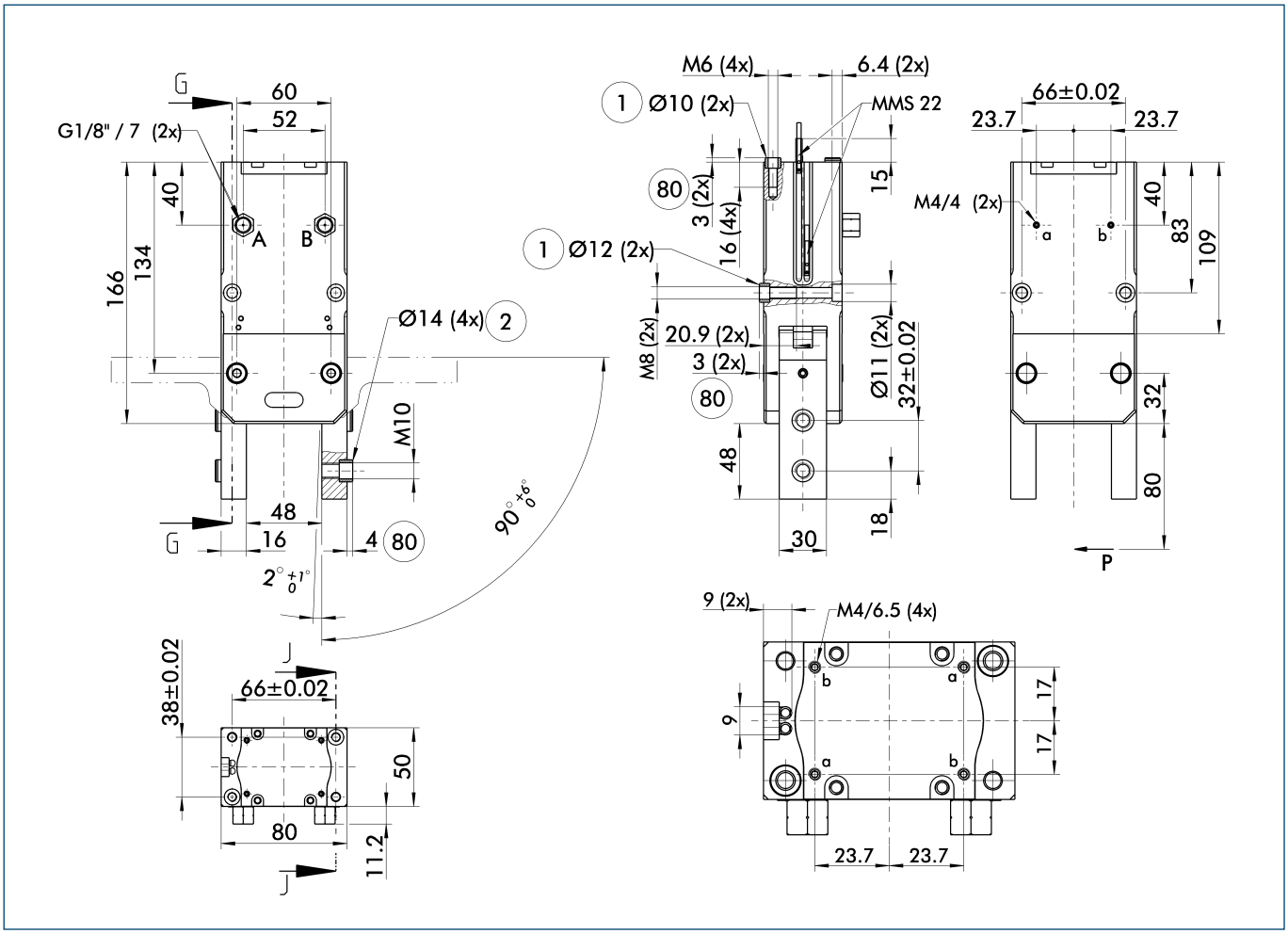


The drawing shows the gripper in the basic version with closed jaws, the dimensions do not include the options described below.

ⓘ The SDV-P pressure maintenance valve can also be used for I.D. or O.D. gripping alternatively or in addition to the spring-loaded, mechanical gripping force maintenance device (see "Accessories" catalog section).

A, a Main/direct connection, gripper opening
B, b Main/direct connection, gripper closing
① Gripper connection
② Finger connection
(80) Depth of the centering sleeve hole in the matching part

## Hose-free direct connection

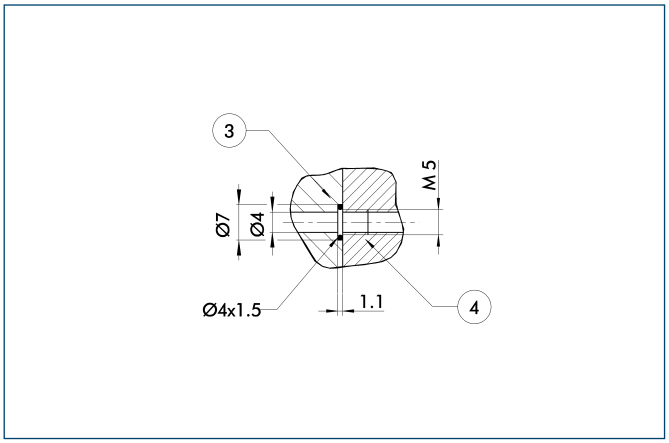


③ Adapter
④ Gripper

The direct connection is used for supplying compressed air without hoses. Instead, the pressure medium is fed through bore-holes in the mounting plate.

## Electronic magnetic switches

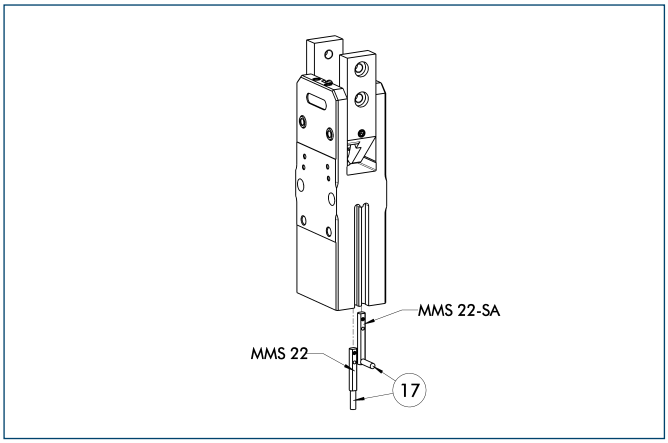


⑰ Cable outlet

End position monitoring for mounting in the C-slot

| Description | ID | Recommended product |
|---|---|---|
| Electronic magnetic switches | | |
| MMS 22-S-M5-PNP | 0301438 | |
| MMS 22-S-M5-NPN | 0301439 | |
| MMS 22-S-M8-PNP | 0301432 | • |
| MMS 22-S-M8-NPN | 0301433 | |
| MMSK 22-S-PNP | 0301434 | |
| MMSK 22-S-NPN | 0301435 | |
| Electronic magnetic switches with lateral cable outlet | | |
| MMS 22-S-M5-PNP-SA | 0301448 | |
| MMS 22-S-M5-NPN-SA | 0301449 | |
| MMS 22-S-M8-PNP-SA | 0301442 | • |
| MMS 22-S-M8-NPN-SA | 0301443 | |
| MMSK 22-S-PNP-SA | 0301444 | |
| MMSK 22-S-NPN-SA | 0301445 | |
| Connection cables | | |
| KA BG05-L 3P-0300 | 0301652 | |
| KA BG08-L 3P-0300-PNP | 0301622 | |
| KA BG08-L 3P-0500-PNP | 0301623 | |
| KA BW05-L 3P-0300 | 0301650 | |
| KA BW08-L 3P-0300-NPN | 0301602 | |
| KA BW08-L 3P-0300-PNP | 0301594 | |
| KA BW08-L 3P-0500-NPN | 9641116 | |
| KA BW08-L 3P-0500-PNP | 0301502 | |
| Cable extensions | | |
| KV BW08-SG08 3P-0030-PNP | 0301495 | |
| KV BW08-SG08 3P-0100-PNP | 0301496 | |
| KV BW08-SG08 3P-0200-PNP | 0301497 | |

ⓘ Two sensors (closer/NO) are required for each gripper, plus extension cables as an option.

ⓘ Please note the minimum permitted bending radii for the sensor cables, which are generally 35 mm.

## Mounting kit for proximity switch

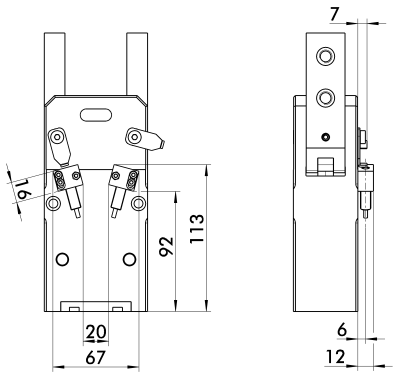


The mounting kit consists of brackets, control cams and appropriate fastening materials. Proximity switches have to be ordered separately.

| Description | ID |
|---|---|
| Mounting kit for proximity switch | |
| AS-PRG 80-IN80 | 0303626 |

You can find more detailed information and individual parts of the above-mentioned accessories in the “Accessories” catalog section.

## Inductive proximity switches

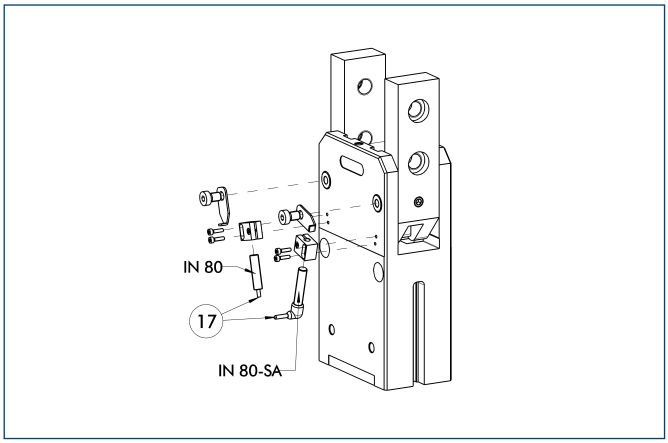


⑰ Cable outlet

End position monitoring mounted with mounting kit

| Description | ID | Recommended product |
|---|---|---|
| Mounting kit for proximity switch | | |
| AS-PRG 80-IN80 | **0303626** | |
| Inductive proximity switches | | |
| IN 80-S-M8 | **0301478** | • |
| IN 80-S-M12 | **0301578** | |
| INK 80-S | **0301550** | |
| Inductive proximity switch with lateral outlet | | |
| IN 80-S-M12-SA | **0301587** | |
| IN 80-S-M8-SA | **0301483** | • |
| INK 80-S-SA | **0301566** | |

ⓘ Two sensors (closer/NO) are required for each gripper, plus extension cables as an option.

ⓘ Please note the minimum permitted bending radii for the sensor cables, which are generally 35 mm.

You can find more detailed information and individual parts of the above-mentioned accessories in the “Accessories” catalog section.

# PRG 100

**Pneumatic • 2-Finger Radial Gripper • Universal Gripper**



## Gripping force, O.D. gripping

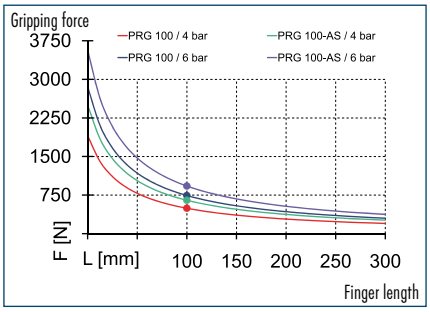


## Maximum admissible inertia J

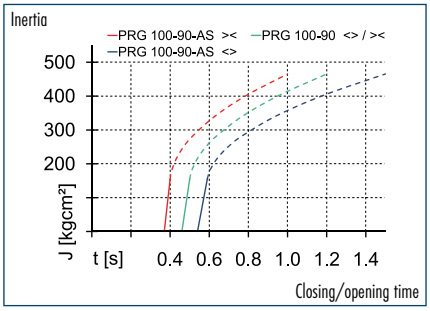


## Finger load

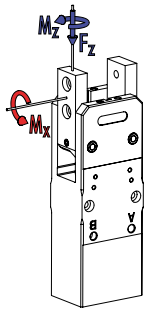


$M_x$ max. 35.00 Nm
$M_z$ max. 10.00 Nm
$F_z$ max. 1320.0 N

ⓘ The indicated moments and forces are statical values, apply for each base jaw and should not appear simultaneously. If the maximum admissible finger weight is exceeded, throttling is necessary in order to ensure a smooth jaw motion without jerks or bounces. The life-time may reduce.

## Technical data

| Description | | PRG 100-30 | PRG 100-30-AS | PRG 100-60 | PRG 100-60-AS | PRG 100-90 | PRG 100-90-AS |
|---|---|---|---|---|---|---|---|
| **ID** | | **0303657** | **0303667** | **0303697** | **0303707** | **0303677** | **0303687** |
| Opening angle per jaw | [°] | 30 | 30 | 60 | 60 | 90 | 90 |
| Closed angle per jaw up to | [°] | 4 | 4 | 4 | 4 | 4 | 4 |
| Closing moment | [Nm] | 100 | 125 | 100 | 125 | 100 | 125 |
| Spring-actuated closing moment | [Nm] | | 25 | | 25 | | 25 |
| Weight | [kg] | 3.67 | 3.81 | 3.66 | 3.8 | 3.64 | 3.78 |
| Recommended workpiece weight | [kg] | 3.78 | 4.72 | 3.78 | 4.72 | 3.78 | 4.72 |
| Air consumption per double stroke | [cm³] | 230 | 230 | 260 | 260 | 290 | 290 |
| Min./max. operating pressure | [bar] | 2/8 | 4/6.5 | 2/8 | 4/6.5 | 2/8 | 4/6.5 |
| Nominal operating pressure | [bar] | 6 | 6 | 6 | 6 | 6 | 6 |
| Closing time | [s] | 0.15 | 0.12 | 0.31 | 0.25 | 0.46 | 0.37 |
| Opening time | [s] | 0.15 | 0.18 | 0.31 | 0.36 | 0.46 | 0.54 |
| Max. permitted finger length | [mm] | 200 | 200 | 200 | 200 | 200 | 200 |
| Max. mass moment of inertia per jaw | [kgcm²] | 155.2 | 155.2 | 155.2 | 155.2 | 155.2 | 155.2 |
| IP class | | 20 | 20 | 20 | 20 | 20 | 20 |
| Min./max. ambient temperature | [°C] | -10/90 | -10/90 | -10/90 | -10/90 | -10/90 | -10/90 |
| Repeat accuracy | [mm] | 0.1 | 0.1 | 0.1 | 0.1 | 0.1 | 0.1 |
| **OPTIONS and their characteristics** | | | | | | | |
| High-temperature version | | **39303657** | **39303667** | **39303697** | **39303707** | **39303677** | **39303687** |
| Min./max. ambient temperature | [°C] | -10/130 | -10/130 | -10/130 | -10/130 | -10/130 | -10/130 |

ⓘ The unit can be actuated without an external customer-specific throttling at the given value of max. mass moment of inertia per jaw. In case of higher mass moments of inertia, an additional throttling is possible (see diagram). The curve applies for 90° versions. For other versions the curve must be parallely off-set according to the opening and closing times.

## Main view

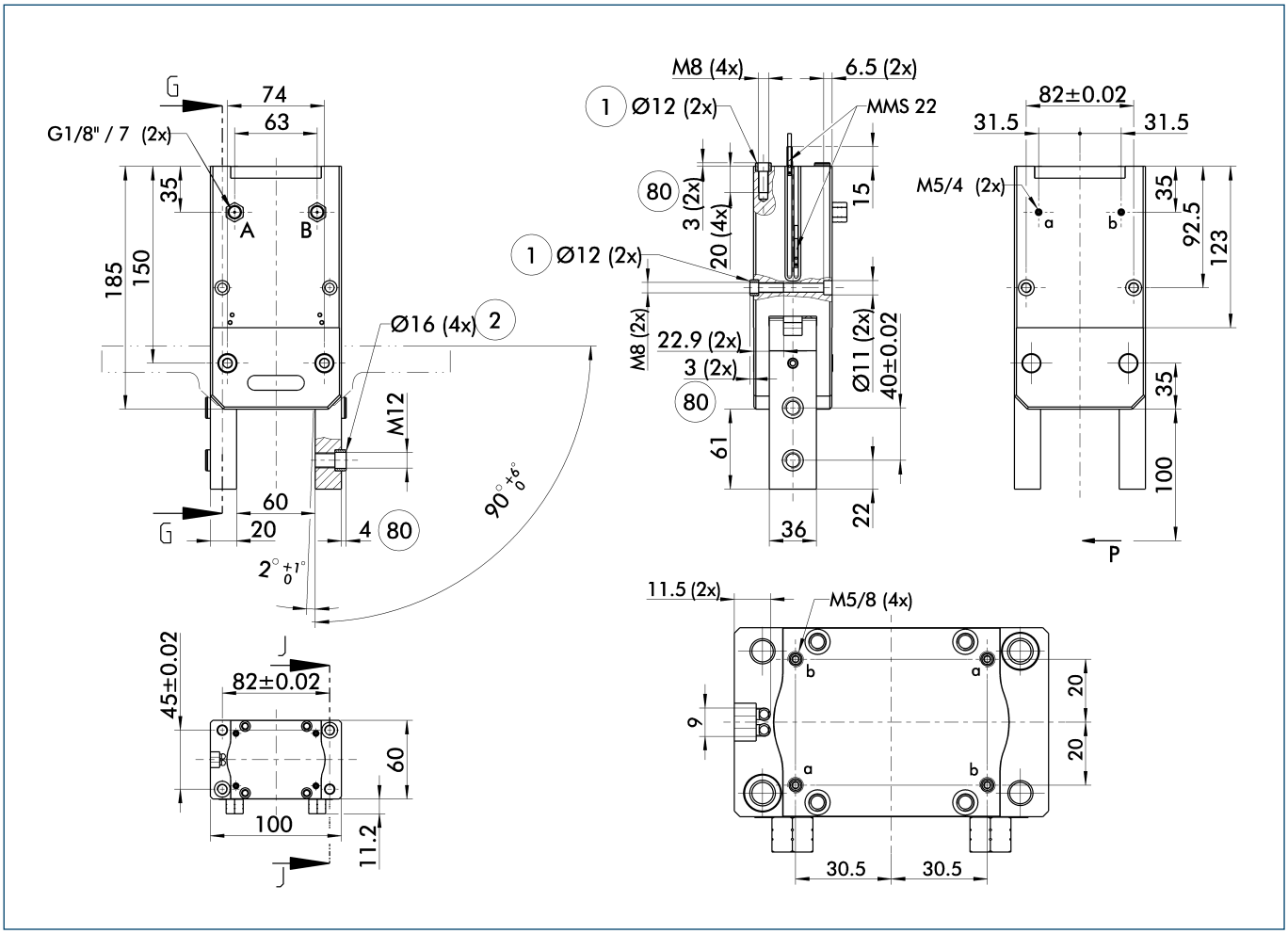


The drawing shows the gripper in the basic version with closed jaws, the dimensions do not include the options described below.

ⓘ The SDV-P pressure maintenance valve can also be used for I.D. or O.D. gripping alternatively or in addition to the spring-loaded, mechanical gripping force maintenance device (see "Accessories" catalog section).

A, a Main/direct connection, gripper opening
B, b Main/direct connection, gripper closing
① Gripper connection
② Finger connection
80 Depth of the centering sleeve hole in the matching part

## Hose-free direct connection

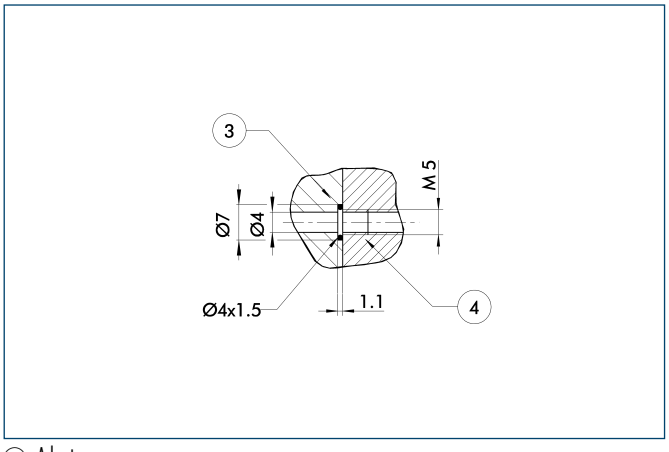


③ Adapter
④ Gripper

The direct connection is used for supplying compressed air without hoses. Instead, the pressure medium is fed through bore-holes in the mounting plate.

## Electronic magnetic switches

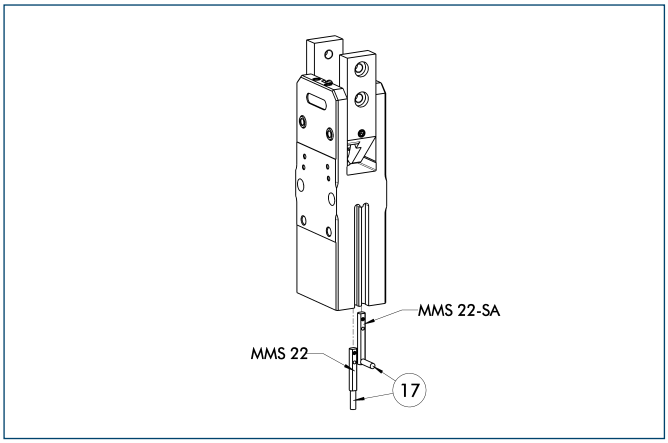


⑰ Cable outlet

End position monitoring for mounting in the C-slot

| Description | ID | Recommended product |
|---|---|---|
| Electronic magnetic switches | | |
| MMS 22-S-M5-PNP | 0301438 | |
| MMS 22-S-M5-NPN | 0301439 | |
| MMS 22-S-M8-PNP | 0301432 | • |
| MMS 22-S-M8-NPN | 0301433 | |
| MMSK 22-S-PNP | 0301434 | |
| MMSK 22-S-NPN | 0301435 | |
| Electronic magnetic switches with lateral cable outlet | | |
| MMS 22-S-M5-PNP-SA | 0301448 | |
| MMS 22-S-M5-NPN-SA | 0301449 | |
| MMS 22-S-M8-PNP-SA | 0301442 | • |
| MMS 22-S-M8-NPN-SA | 0301443 | |
| MMSK 22-S-PNP-SA | 0301444 | |
| MMSK 22-S-NPN-SA | 0301445 | |
| Connection cables | | |
| KA BG05-L 3P-0300 | 0301652 | |
| KA BG08-L 3P-0300-PNP | 0301622 | |
| KA BG08-L 3P-0500-PNP | 0301623 | |
| KA BW05-L 3P-0300 | 0301650 | |
| KA BW08-L 3P-0300-NPN | 0301602 | |
| KA BW08-L 3P-0300-PNP | 0301594 | |
| KA BW08-L 3P-0500-NPN | 9641116 | |
| KA BW08-L 3P-0500-PNP | 0301502 | |
| Cable extensions | | |
| KV BW08-SG08 3P-0030-PNP | 0301495 | |
| KV BW08-SG08 3P-0100-PNP | 0301496 | |
| KV BW08-SG08 3P-0200-PNP | 0301497 | |

ⓘ Two sensors (closer/NO) are required for each gripper, plus extension cables as an option.

ⓘ Please note the minimum permitted bending radii for the sensor cables, which are generally 35 mm.

## Mounting kit for proximity switch

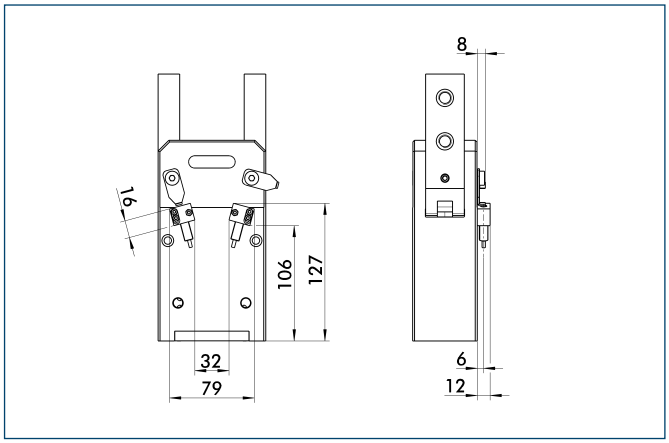


The mounting kit consists of brackets, control cams and appropriate fastening materials. Proximity switches have to be ordered separately.

| Description | ID |
|---|---|
| Mounting kit for proximity switch | |
| AS-PRG 100-IN80 | 0303627 |

You can find more detailed information and individual parts of the above-mentioned accessories in the “Accessories” catalog section.

## Inductive proximity switches

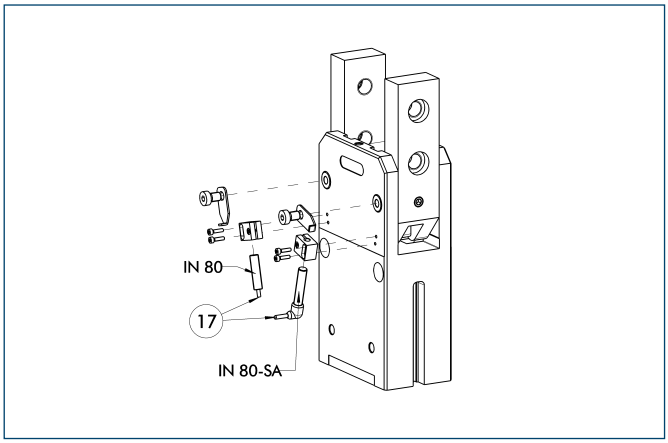


⑰ Cable outlet

End position monitoring mounted with mounting kit

| Description | ID | Recommended product |
|---|---|---|
| Mounting kit for proximity switch | | |
| AS-PRG 100-IN80 | **0303627** | |
| Inductive proximity switches | | |
| IN 80-S-M8 | **0301478** | • |
| IN 80-S-M12 | **0301578** | |
| INK 80-S | **0301550** | |
| Inductive proximity switch with lateral outlet | | |
| IN 80-S-M12-SA | **0301587** | |
| IN 80-S-M8-SA | **0301483** | • |
| INK 80-S-SA | **0301566** | |

ⓘ Two sensors (closer/NO) are required for each gripper, plus extension cables as an option.

ⓘ Please note the minimum permitted bending radii for the sensor cables, which are generally 35 mm.

You can find more detailed information and individual parts of the above-mentioned accessories in the “Accessories” catalog section.

# PRG 125

**Pneumatic • 2-Finger Radial Gripper • Universal Gripper**



## Gripping force, O.D. gripping

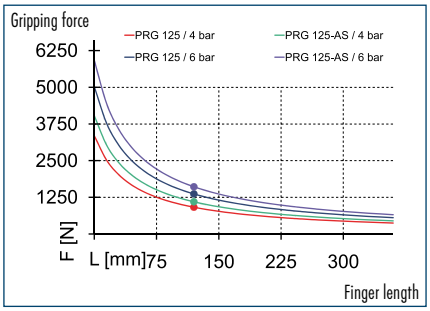


## Maximum admissible inertia J

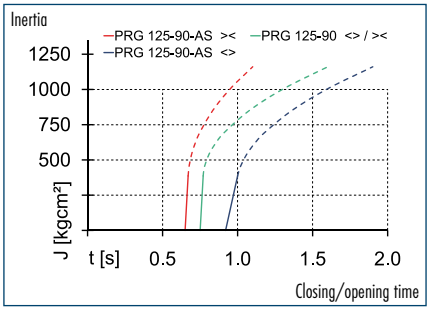


## Finger load

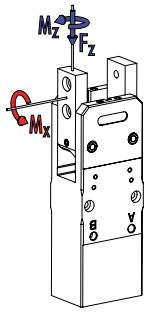


- $M_x$ max. 45.00 Nm
- $M_z$ max. 15.00 Nm
- $F_z$ max. 1770.0 N

ⓘ The indicated moments and forces are statical values, apply for each base jaw and should not appear simultaneously. If the maximum admissible finger weight is exceeded, throttling is necessary in order to ensure a smooth jaw motion without jerks or bounces. The life-time may reduce.

## Technical data

| Description | | PRG 125-30 | PRG 125-30-AS | PRG 125-60 | PRG 125-60-AS | PRG 125-90 | PRG 125-90-AS |
|---|---|---|---|---|---|---|---|
| **ID** | | **0303658** | **0303668** | **0303698** | **0303708** | **0303678** | **0303688** |
| Opening angle per jaw | [°] | 30 | 30 | 60 | 60 | 90 | 90 |
| Closed angle per jaw up to | [°] | 4 | 4 | 4 | 4 | 4 | 4 |
| Closing moment | [Nm] | 225 | 295 | 225 | 295 | 225 | 295 |
| Spring-actuated closing moment | [Nm] | | 70 | | 70 | | 70 |
| Weight | [kg] | 6.49 | 6.72 | 6.48 | 6.71 | 6.46 | 6.69 |
| Recommended workpiece weight | [kg] | 6.96 | 9.12 | 6.96 | 9.12 | 6.96 | 9.12 |
| Air consumption per double stroke | [cm³] | 475 | 475 | 520 | 520 | 580 | 580 |
| Min./max. operating pressure | [bar] | 2/8 | 4/6.5 | 2/8 | 4/6.5 | 2/8 | 4/6.5 |
| Nominal operating pressure | [bar] | 6 | 6 | 6 | 6 | 6 | 6 |
| Closing time | [s] | 0.25 | 0.22 | 0.5 | 0.43 | 0.75 | 0.65 |
| Opening time | [s] | 0.25 | 0.31 | 0.5 | 0.61 | 0.75 | 0.92 |
| Max. permitted finger length | [mm] | 240 | 240 | 240 | 240 | 240 | 240 |
| Max. mass moment of inertia per jaw | [kgcm²] | 386.8 | 386.8 | 386.8 | 386.8 | 386.8 | 386.8 |
| IP class | | 20 | 20 | 20 | 20 | 20 | 20 |
| Min./max. ambient temperature | [°C] | -10/90 | -10/90 | -10/90 | -10/90 | -10/90 | -10/90 |
| Repeat accuracy | [mm] | 0.1 | 0.1 | 0.1 | 0.1 | 0.1 | 0.1 |
| **OPTIONS and their characteristics** | | | | | | | |
| High-temperature version | | **39303658** | **39303668** | **39303698** | **39303708** | **39303678** | **39303688** |
| Min./max. ambient temperature | [°C] | -10/130 | -10/130 | -10/130 | -10/130 | -10/130 | -10/130 |

ⓘ The unit can be actuated without an external customer-specific throttling at the given value of max. mass moment of inertia per jaw. In case of higher mass moments of inertia, an additional throttling is possible (see diagram). The curve applies for 90° versions. For other versions the curve must be parallelly off-set according to the opening and closing times.

## Main view

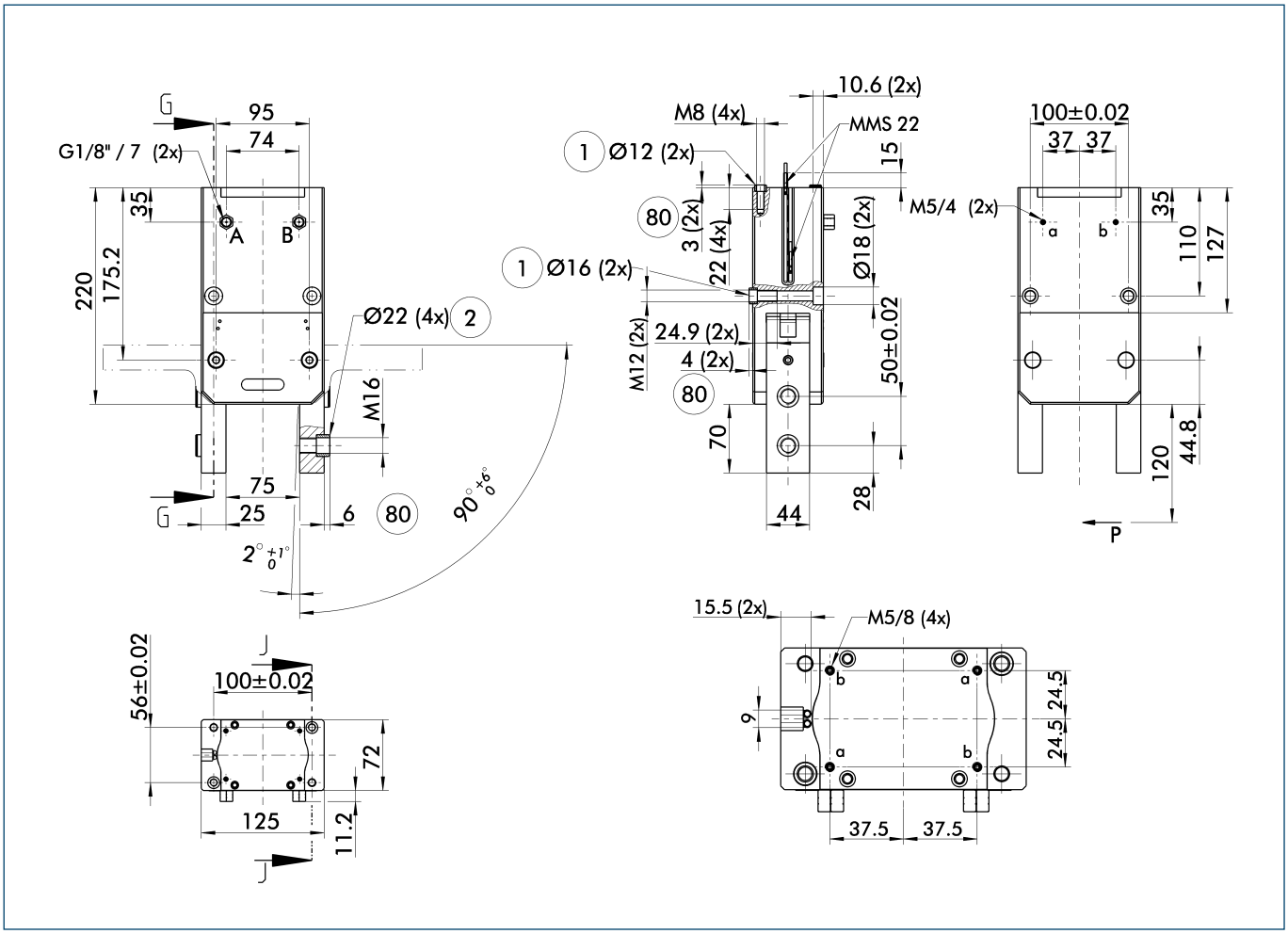


The drawing shows the gripper in the basic version with closed jaws, the dimensions do not include the options described below.

ⓘ The SDV-P pressure maintenance valve can also be used for I.D. or O.D. gripping alternatively or in addition to the spring-loaded, mechanical gripping force maintenance device (see "Accessories" catalog section).

A, a Main/direct connection, gripper opening
B, b Main/direct connection, gripper closing
① Gripper connection
② Finger connection
(80) Depth of the centering sleeve hole in the matching part

## Hose-free direct connection

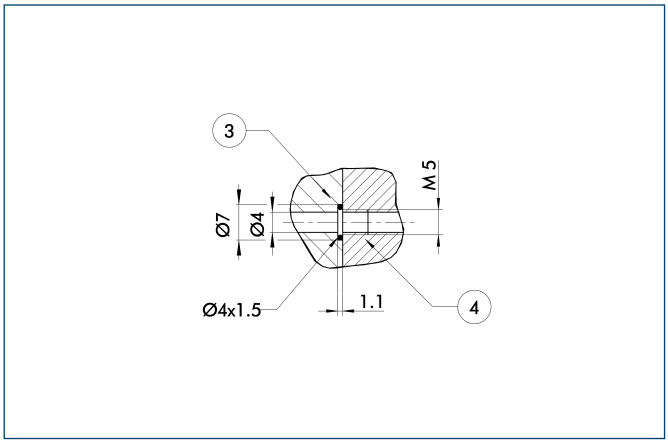


③ Adapter
④ Gripper

The direct connection is used for supplying compressed air without hoses. Instead, the pressure medium is fed through bore-holes in the mounting plate.

## Electronic magnetic switches

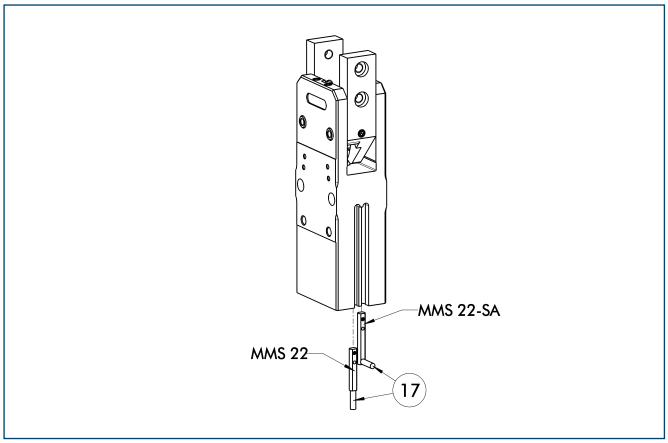


⑰ Cable outlet

End position monitoring for mounting in the C-slot

| Description | ID | Recommended product |
|---|---|---|
| Electronic magnetic switches | | |
| MMS 22-S-M5-PNP | **0301438** | |
| MMS 22-S-M5-NPN | **0301439** | |
| MMS 22-S-M8-PNP | **0301432** | • |
| MMS 22-S-M8-NPN | **0301433** | |
| MMSK 22-S-PNP | **0301434** | |
| MMSK 22-S-NPN | **0301435** | |
| Electronic magnetic switches with lateral cable outlet | | |
| MMS 22-S-M5-PNP-SA | **0301448** | |
| MMS 22-S-M5-NPN-SA | **0301449** | |
| MMS 22-S-M8-PNP-SA | **0301442** | • |
| MMS 22-S-M8-NPN-SA | **0301443** | |
| MMSK 22-S-PNP-SA | **0301444** | |
| MMSK 22-S-NPN-SA | **0301445** | |
| Connection cables | | |
| KA BG05-L 3P-0300 | **0301652** | |
| KA BG08-L 3P-0300-PNP | **0301622** | |
| KA BG08-L 3P-0500-PNP | **0301623** | |
| KA BW05-L 3P-0300 | **0301650** | |
| KA BW08-L 3P-0300-NPN | **0301602** | |
| KA BW08-L 3P-0300-PNP | **0301594** | |
| KA BW08-L 3P-0500-NPN | **9641116** | |
| KA BW08-L 3P-0500-PNP | **0301502** | |
| Cable extensions | | |
| KV BW08-SG08 3P-0030-PNP | **0301495** | |
| KV BW08-SG08 3P-0100-PNP | **0301496** | |
| KV BW08-SG08 3P-0200-PNP | **0301497** | |

ⓘ Two sensors (closer/NO) are required for each gripper, plus extension cables as an option.

ⓘ Please note the minimum permitted bending radii for the sensor cables, which are generally 35 mm.

## Mounting kit for proximity switch

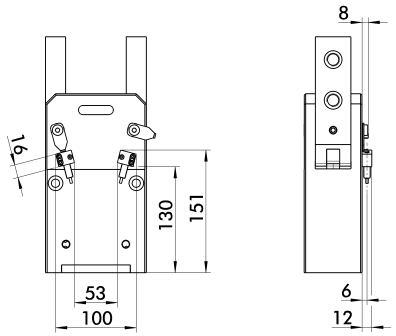


The mounting kit consists of brackets, control cams and appropriate fastening materials. Proximity switches have to be ordered separately.

| Description | ID |
|---|---|
| Mounting kit for proximity switch | |
| AS-PRG 125-IN80 | **0303628** |

You can find more detailed information and individual parts of the above-mentioned accessories in the “Accessories” catalog section.

## Inductive proximity switches

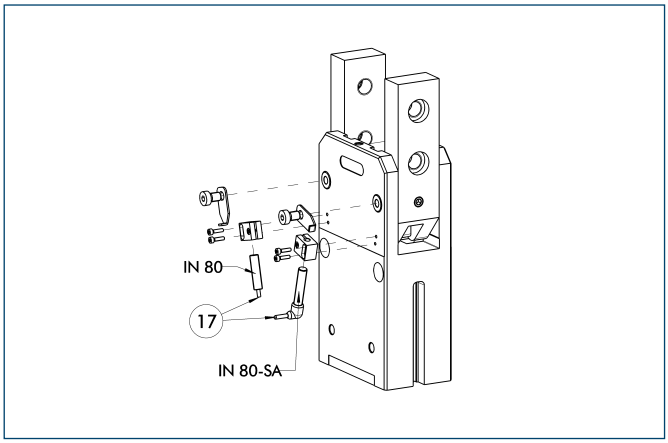


⑰ Cable outlet

End position monitoring mounted with mounting kit

| Description | ID | Recommended product |
|---|---|---|
| Mounting kit for proximity switch | | |
| AS-PRG 125-IN80 | **0303628** | |
| Inductive proximity switches | | |
| IN 80-S-M8 | **0301478** | • |
| IN 80-S-M12 | **0301578** | |
| INK 80-S | **0301550** | |
| Inductive proximity switch with lateral outlet | | |
| IN 80-S-M12-SA | **0301587** | |
| IN 80-S-M8-SA | **0301483** | • |
| INK 80-S-SA | **0301566** | |

ⓘ Two sensors (closer/NO) are required for each gripper, plus extension cables as an option.

ⓘ Please note the minimum permitted bending radii for the sensor cables, which are generally 35 mm.

180°

You can find more detailed information and individual parts of the above-mentioned accessories in the “Accessories” catalog section.

# DRG

**Pneumatic • 2-Finger Radial Gripper • Sealed Gripper**

**Sizes**
44 ... 100

**Weight**
0.5 kg ... 4.46 kg

**Gripping moment**
8.2 Nm ... 143 Nm

**Angle per jaw**
90°

**Workpiece weight**
0.9 kg ... 7.2 kg

## Application example




**Linear gripping unit for removing workpieces from a pallet-loading station**

1. Sealed 2-Finger Radial Gripper DRG
2. MLD Linear Motor Drive

## Sealed Gripper
sealed 180° angular gripper for use in dirty environments

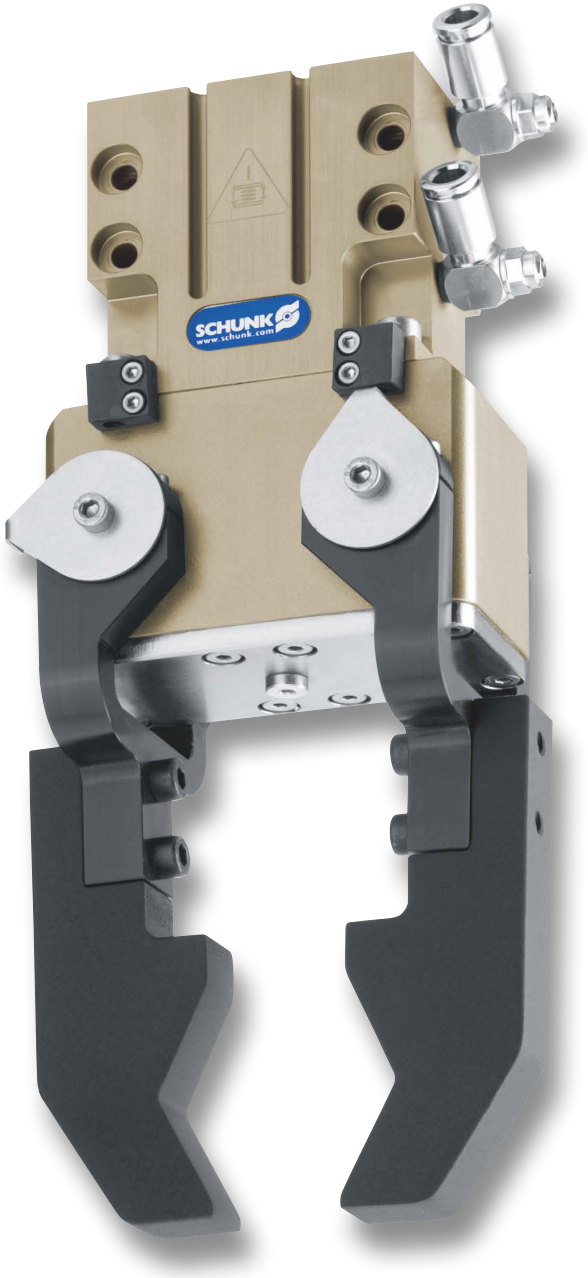


## Field of application
For applications requiring a large opening range. Specially suitable for use in dirty environments.

## Your advantages and benefits

**Completely sealed gripper version**
allows applications in dirty environments

**Air supply via hose-free direct connection or screw connections**
for the flexible supply of compressed air in all automation systems

**Equipped with gripping force maintenance device**
ensuring that the workpiece stays gripped in case of power drop

**Opening angle adjustable from 20° to 180°**
for a versatile field of applications

**Kinematics**
Slotted link gear for concentric gripping with large opening and closing movements

## General note to the series

**Principle of function**
Wedge-hook kinematics

**Housing material**
Aluminum alloy, hard-anodized

**Base jaw material**
Steel

**Actuation**
pneumatic, with filtered compressed air (10 microns): dry, lubricated or non-lubricated
Pressure medium: Required quality class of compressed air according to DIN ISO 8573-1: 6 4 4

**Warranty**
24 months (details, general terms and conditions and operation manuals can be downloaded under www.schunk.com)

**Scope of delivery**
Brackets for proximity switches, centering sleeves, O-rings for direct connection, deaeration controls, assembly and operating manual with manufacturer's declaration

## Sectional diagram

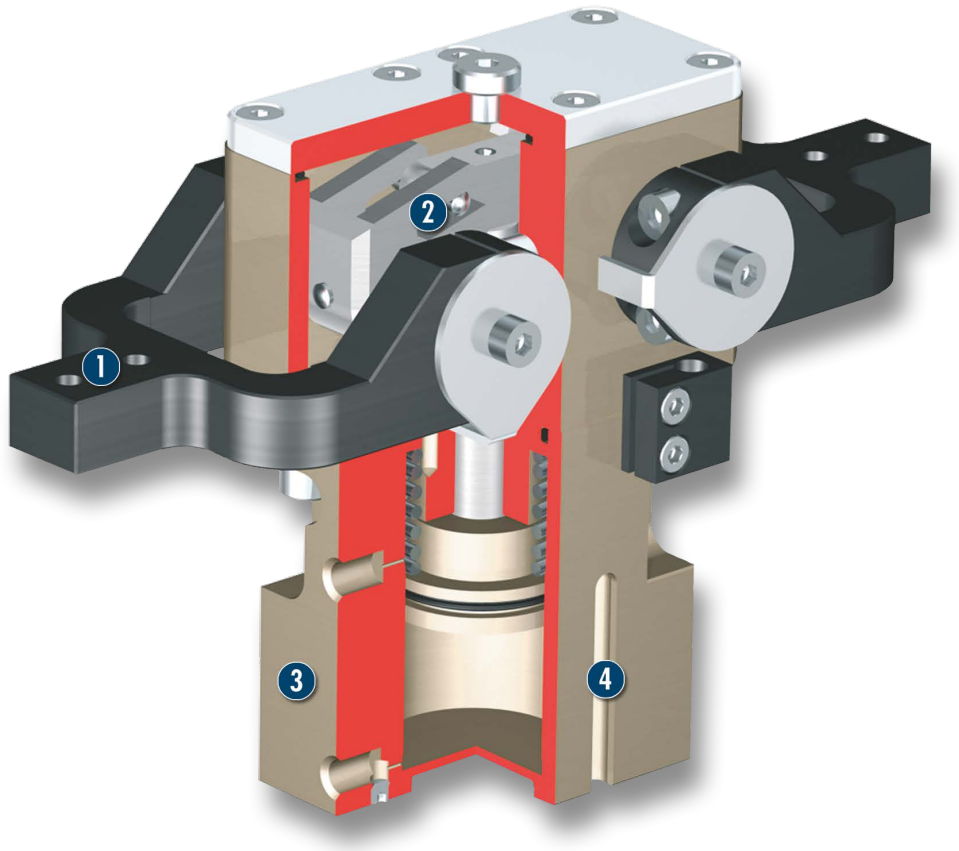




1 **Base jaws**
for the connection of workpiece-specific gripper fingers

2 **Kinematics**
Slotted link gear for concentric gripping with large opening and closing movements

3 **Housing**
weight-optimized through application of hard-anodized, high-strength aluminum alloy

4 **Position monitoring**
with C-slot switch

## Functional description

The round piston is moved up or down by compressed air.
In the process, the two pins of the slotted link gear move in unison and relative to the groove in the top jaws. In the gripping moment, these two pins reach the largest lever arm.

## Options and special information

180° angular grippers (radial grippers) are advantageous in order to avoid additional stroke motions. Since each jaw rotates away by 90°, they are mostly removed from the work area; a stroke motion to retract the entire gripper can be omitted.

## Accessories

Accessories from SCHUNK – the suitable supplement for maximum functionality, reliability and performance of all automation modules.

### Centering sleeves



### Fittings



### Pressure maintenance valve



### Inductive proximity switches



### Plastic inserts





### Sensor cables



### Gripper pads

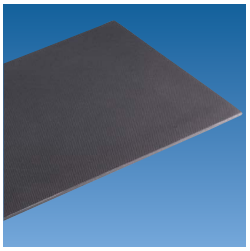

### Sensor Distributor

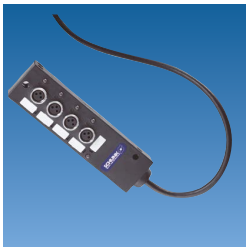

ⓘ For the exact size of the required accessories, availability of this size and the designation and ID, please refer to the additional views at the end of the size in question. You will find more detailed information on our accessory range in the “Accessories” catalog section.

## General note to the series

### Gripping moment

Gripping moment is the arithmetic total of gripping moments for each claw jaw.

### Finger length

The finger length is measured from the upper edge of the gripper housing in direction to the main axis. If the max. admissible finger length is exceeded, the speed of jaw motions have to be reduced and/or the opening angle has to be diminished, as it is done with heavy fingers. The service life of the gripper can shorten.

### Repeat accuracy

is defined as the spread of the limit position after 100 consecutive strokes.

### Workpiece weight

The recommended workpiece weight is calculated for a force-type connection with a coefficient of friction of 0.1 and a safety factor of 2 against slippage of the workpiece on acceleration due to gravity g. Considerably heavier workpiece weights are permitted with form-fit gripping.

### Closing and opening times

Closing and opening times are purely the times that the base jaws or fingers are in motion. Valve switching times, hose filling times or PLC reaction times are not included in the above times and must be taken into consideration when determining cycle times.

# DRG 44

**Pneumatic • 2-Finger Radial Gripper • Sealed Gripper**

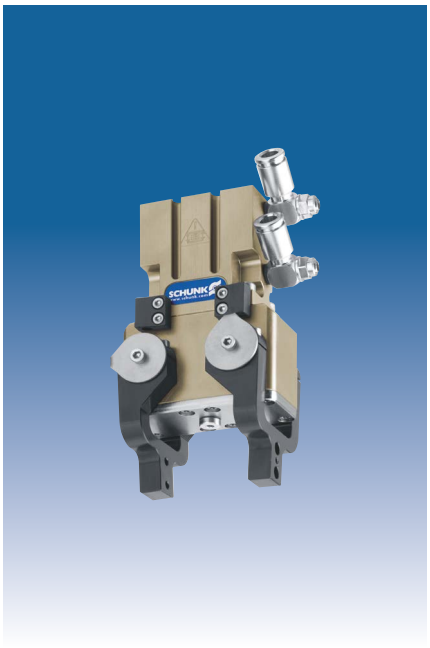

## Gripping force, O.D. gripping

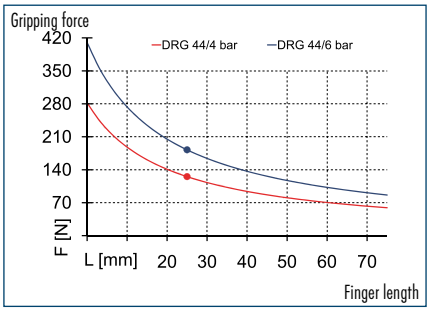


## Finger load

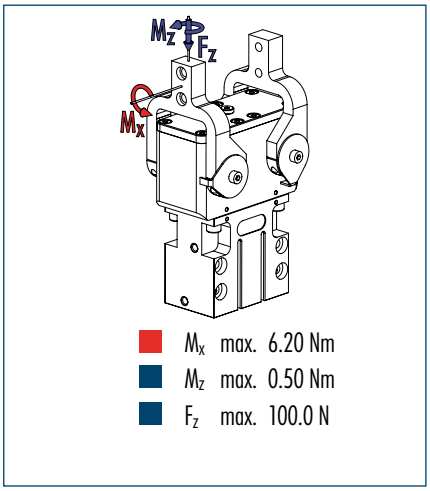


ⓘ The indicated moments and forces are statical values, apply for each base jaw and should not appear simultaneously. If the maximum admissible finger weight is exceeded, throttling is necessary in order to ensure a smooth jaw motion without jerks or bounces. The life-time may reduce.

## Technical data

| Description | | DRG 44 |
|---|---|---|
| **ID** | | **0307106** |
| Opening angle per jaw | [°] | 90 |
| Closed angle per jaw up to | [°] | 1.5 |
| Closing moment | [Nm] | 8.2 |
| Spring-actuated closing moment | [Nm] | 1.8 |
| Weight | [kg] | 0.5 |
| Recommended workpiece weight | [kg] | 0.9 |
| Air consumption per double stroke | [cm³] | 16 |
| Min./max. operating pressure | [bar] | 4/6.5 |
| Nominal operating pressure | [bar] | 6 |
| Closing/opening time | [s] | 0.4/0.5 |
| Max. permitted finger length | [mm] | 50 |
| Max. permitted weight per finger | [kg] | 0.09 |
| IP class | | 67 |
| Min./max. ambient temperature | [°C] | -10/90 |
| Repeat accuracy | [mm] | 0.1 |
| **OPTIONS and their characteristics** | | |
| High-temperature version | | **39307106** |
| Min./max. ambient temperature | [°C] | -10/130 |

ⓘ The opening angle of the base jaws can be limited.

## Main view

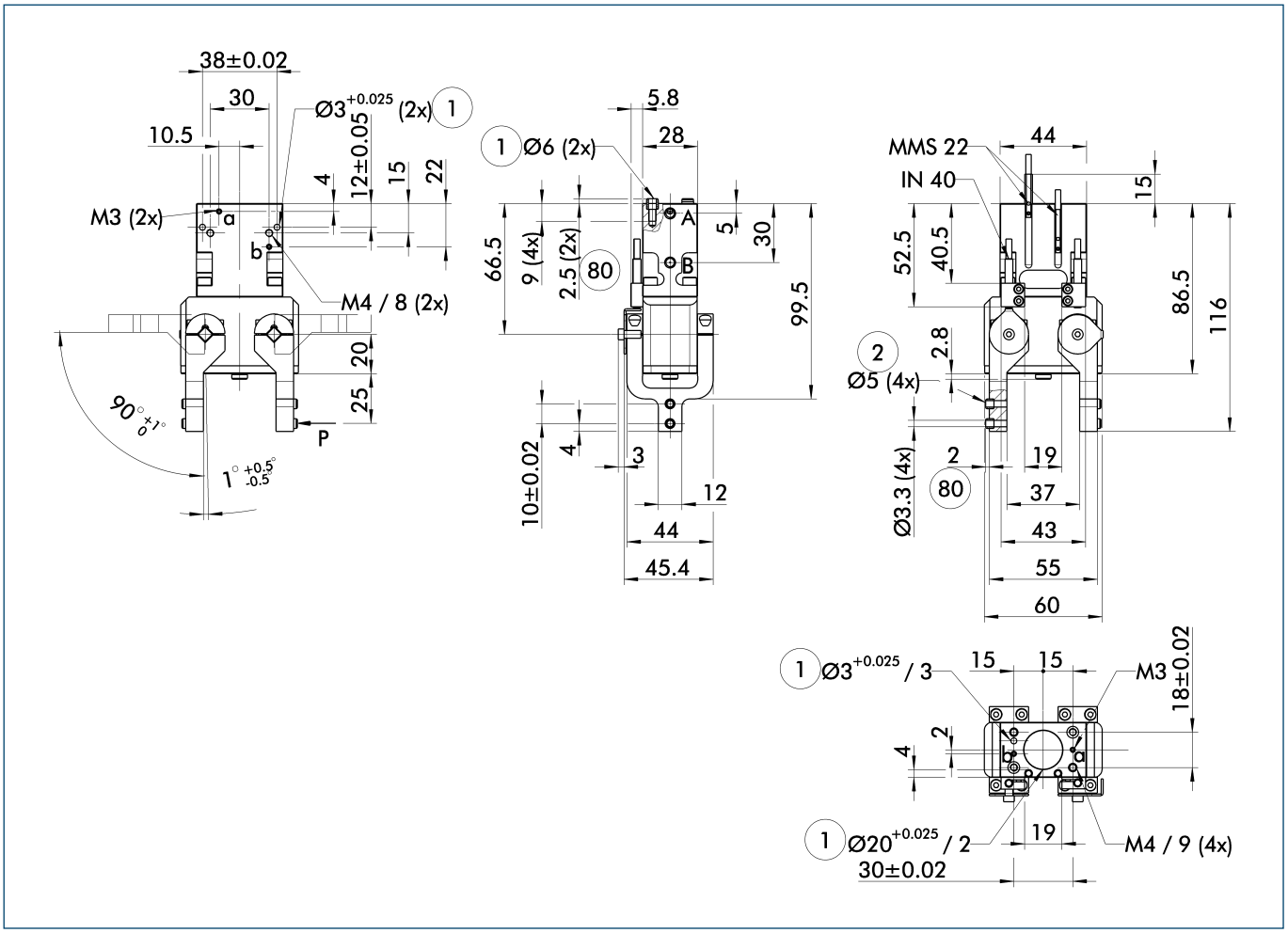


The drawing shows the gripper in the basic version with closed jaws, the dimensions do not include the options described below.

ⓘ The SDV-P pressure maintenance valve can be used as a gripping force maintenance device (see "Accessories" catalog section).

A, a Main/direct connection, gripper opening
B, b Main/direct connection, gripper closing
① Gripper connection
② Finger connection
80 Depth of the centering sleeve hole in the matching part

## Hose-free direct connection

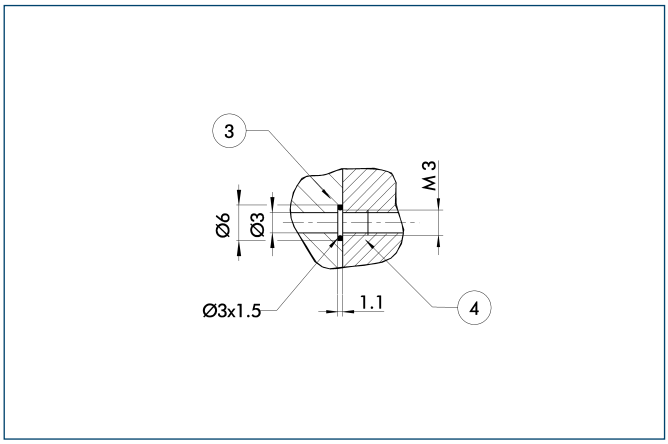


③ Adapter
④ Gripper

The direct connection is used for supplying compressed air without hoses. Instead, the pressure medium is fed through bore-holes in the mounting plate.

## Programmable magnetic switch

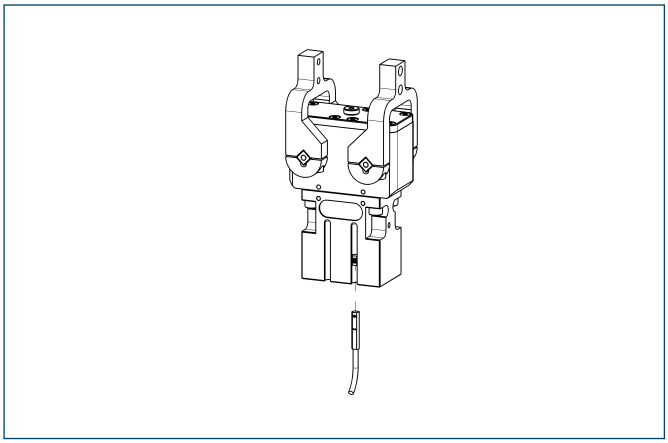

Position monitoring with two programmable positions per sensor. The end position monitoring is mounted in the C-slot.

| Description | ID | Recommended product |
|---|---|---|
| Programmable magnetic switch | | |
| MMS-P 22-S-M8-PNP | **0301370** | • |
| MMSK-P 22-S-PNP | **0301371** | |
| Connection cables | | |
| KA BG08-L 4P-0500 | **0307767** | |
| KA BG08-L 4P-1000 | **0307768** | |
| KA BW08-L 4P-0500 | **0307765** | |
| KA BW08-L 4P-1000 | **0307766** | |
| Sensor Distributor | | |
| V2-M8-4P-2XM8-3P | **0301380** | |

ⓘ Please note the minimum permitted bending radii for the sensor cables, which are generally 35 mm.

ⓘ Per gripper one sensor (closer/NO) is required, optionally a cable extension.

## Electronic magnetic switches

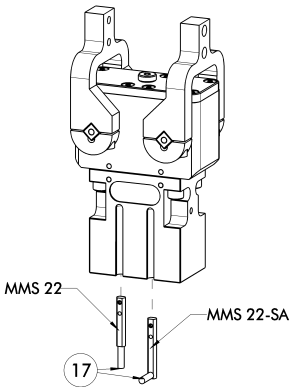


⑰ Cable outlet

End position monitoring for mounting in the C-slot

| Description | ID | Recommended product |
|---|---|---|
| Electronic magnetic switches | | |
| MMS 22-S-M5-PNP | **0301438** | |
| MMS 22-S-M5-NPN | **0301439** | |
| MMS 22-S-M8-PNP | **0301432** | • |
| MMS 22-S-M8-NPN | **0301433** | |
| MMSK 22-S-PNP | **0301434** | |
| MMSK 22-S-NPN | **0301435** | |
| Electronic magnetic switches with lateral cable outlet | | |
| MMS 22-S-M5-PNP-SA | **0301448** | |
| MMS 22-S-M5-NPN-SA | **0301449** | |
| MMS 22-S-M8-PNP-SA | **0301442** | • |
| MMS 22-S-M8-NPN-SA | **0301443** | |
| MMSK 22-S-PNP-SA | **0301444** | |
| MMSK 22-S-NPN-SA | **0301445** | |
| Reed Switches | | |
| RMS 22-S-M8 | **0377720** | • |
| Connection cables | | |
| KA BG05-L 3P-0300 | **0301652** | |
| KA BG08-L 3P-0300-PNP | **0301622** | |
| KA BG08-L 3P-0500-PNP | **0301623** | |
| KA BW05-L 3P-0300 | **0301650** | |
| KA BW08-L 3P-0300-NPN | **0301602** | |
| KA BW08-L 3P-0300-PNP | **0301594** | |
| KA BW08-L 3P-0500-NPN | **9641116** | |
| KA BW08-L 3P-0500-PNP | **0301502** | |
| Cable extensions | | |
| KV BW08-SG08 3P-0030-PNP | **0301495** | |
| KV BW08-SG08 3P-0100-PNP | **0301496** | |
| KV BW08-SG08 3P-0200-PNP | **0301497** | |

ⓘ Two sensors (closer/NO) are required for each gripper, plus extension cables as an option.

ⓘ Please note the minimum permitted bending radii for the sensor cables, which are generally 35 mm.

You can find more detailed information and individual parts of the above-mentioned accessories in the “Accessories” catalog section.

## Inductive proximity switches

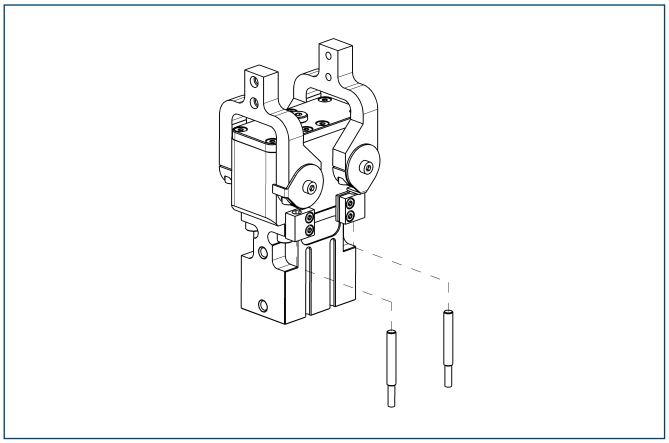

End position monitoring for direct mounting

| Description | ID | Recommended product |
|---|---|---|
| Inductive proximity switches | | |
| IN 40-S-M8 | **0301474** | • |
| IN 40-S-M12 | **0301574** | |
| INK 40-S | **0301555** | |
| IN 40-S-M5-PNP | **0301491** | |
| IN 40-S-M5-NPN | **0301492** | |
| Connection cables | | |
| KA BG05-L 3P-0300 | **0301652** | |
| KA BG08-L 3P-0300-PNP | **0301622** | |
| KA BG08-L 3P-0500-PNP | **0301623** | |
| KA BG12-L 3P-0500-PNP | **30016369** | |
| KA BW05-L 3P-0300 | **0301650** | |
| KA BW08-L 3P-0300-PNP | **0301594** | |
| KA BW08-L 3P-0500-PNP | **0301502** | |
| KA BW12-L 3P-0300-PNP | **0301503** | |
| KA BW12-L 3P-0500-PNP | **0301507** | |
| Cable extensions | | |
| KV BG12-SG12 3P-0030-PNP | **0301999** | |
| KV BG12-SG12 3P-0060-PNP | **0301998** | |
| KV BW08-SG08 3P-0030-PNP | **0301495** | |
| KV BW08-SG08 3P-0100-PNP | **0301496** | |
| KV BW08-SG08 3P-0200-PNP | **0301497** | |
| KV BW12-SG12 3P-0030-PNP | **0301595** | |
| KV BW12-SG12 3P-0100-PNP | **0301596** | |
| KV BW12-SG12 3P-0200-PNP | **0301597** | |

ⓘ Two sensors (closer/NO) are required for each gripper, plus extension cables as an option.

ⓘ Please note the minimum permitted bending radii for the sensor cables, which are generally 35 mm.

## Mounting kit for proximity switch

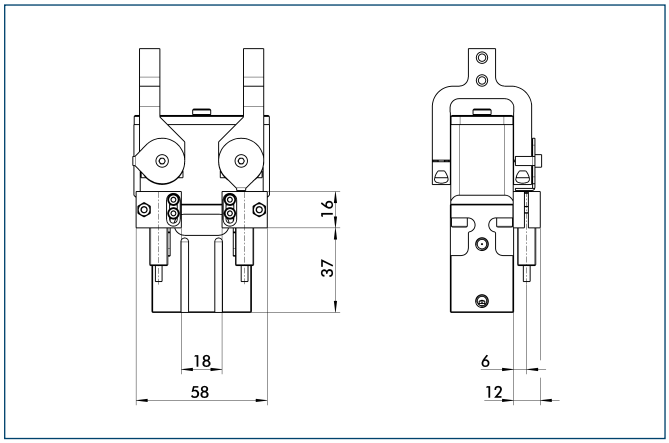


The mounting kit consists of brackets and the appropriate fastening materials. Proximity switches have to be ordered separately.

| Description | ID |
|---|---|
| Mounting kit for proximity switch | |
| AS-DRG-44-80 | **0304131** |

ⓘ This mounting kit needs to be ordered optionally as an accessory.

180°

You can find more detailed information and individual parts of the above-mentioned accessories in the “Accessories” catalog section.

## Inductive proximity switches

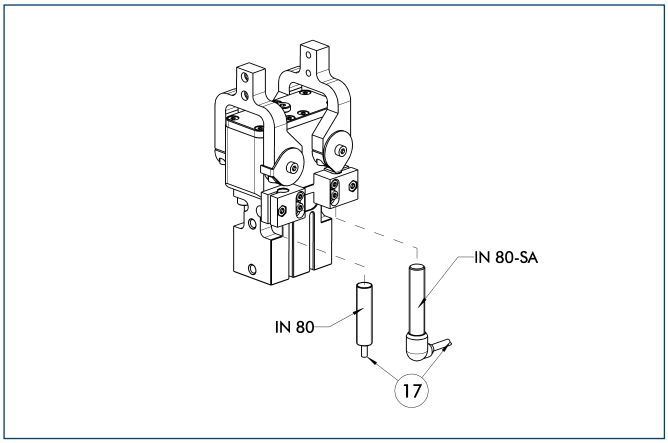


⑰ Cable outlet

End position monitoring mounted with mounting kit

| Description | ID | Recommended product |
|---|---|---|
| Mounting kit for proximity switch | | |
| AS-DRG-44-80 | **0304131** | |
| Inductive proximity switches | | |
| IN 80-S-M8 | **0301478** | • |
| IN 80-S-M12 | **0301578** | |
| INK 80-S | **0301550** | |
| Inductive proximity switch with lateral outlet | | |
| IN 80-S-M12-SA | **0301587** | |
| IN 80-S-M8-SA | **0301483** | • |
| INK 80-S-SA | **0301566** | |

ⓘ Two sensors (closer/NO) are required for each gripper, plus extension cables as an option.
ⓘ This mounting kit needs to be ordered optionally as an accessory.
ⓘ Please note the minimum permitted bending radii for the sensor cables, which are generally 35 mm.

You can find more detailed information and individual parts of the above-mentioned accessories in the “Accessories” catalog section.

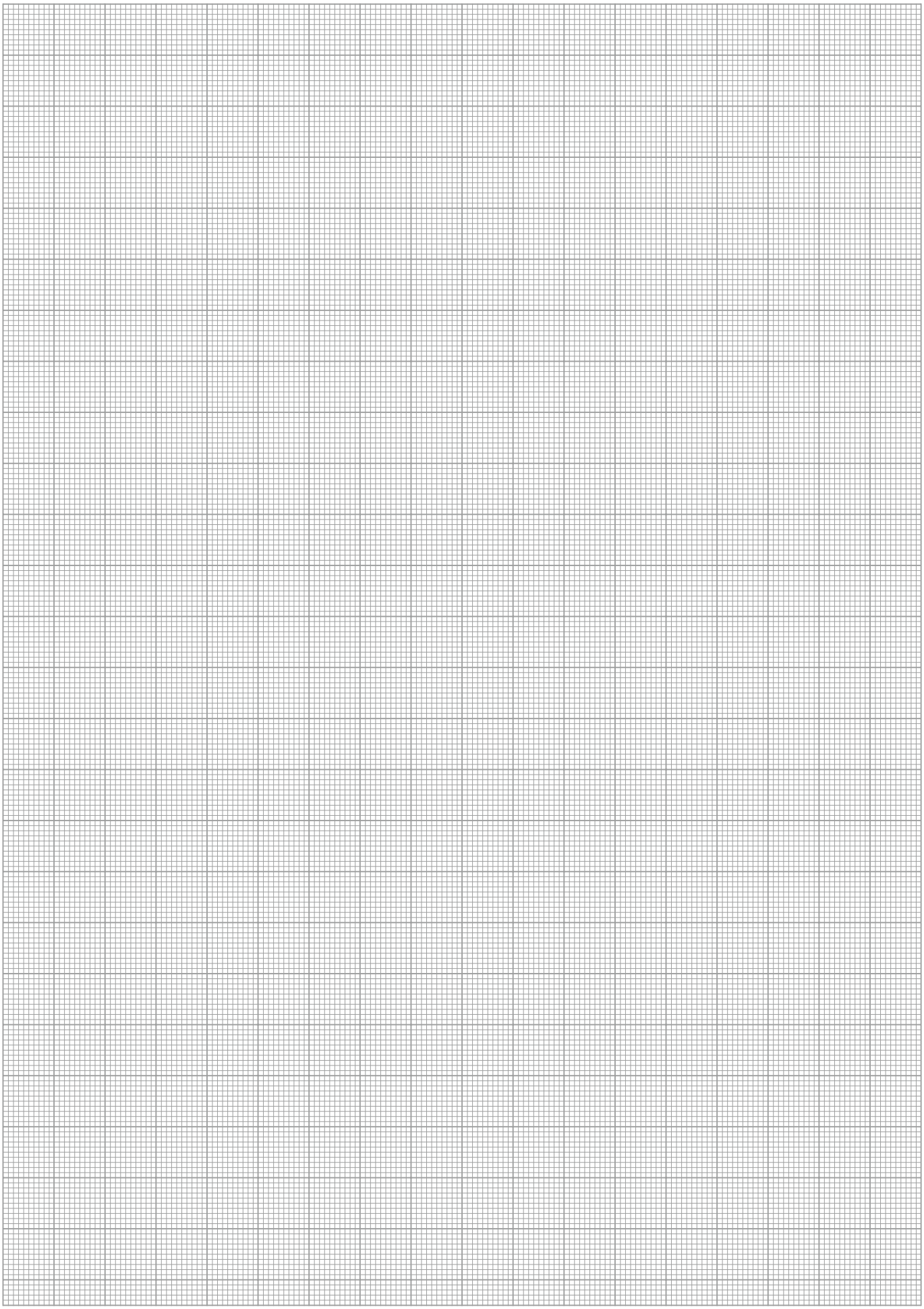

# DRG 54

## Pneumatic • 2-Finger Radial Gripper • Sealed Gripper



### Gripping force, O.D. gripping

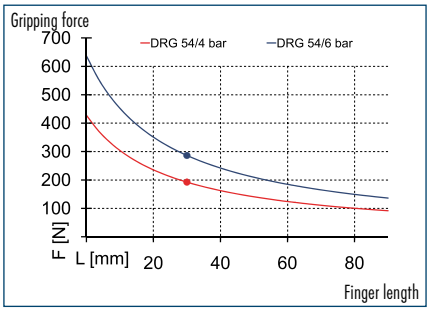


### Finger load

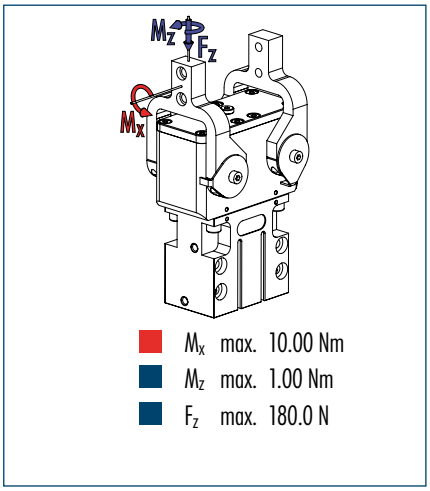


ⓘ The indicated moments and forces are statical values, apply for each base jaw and should not appear simultaneously. If the maximum admissible finger weight is exceeded, throttling is necessary in order to ensure a smooth jaw motion without jerks or bounces. The life-time may reduce.

## Technical data

| Description | | DRG 54 |
|---|---|---|
| **ID** | | **0307107** |
| Opening angle per jaw | [°] | 90 |
| Closed angle per jaw up to | [°] | 1.5 |
| Closing moment | [Nm] | 15.6 |
| Spring-actuated closing moment | [Nm] | 2.8 |
| Weight | [kg] | 0.77 |
| Recommended workpiece weight | [kg] | 1.5 |
| Air consumption per double stroke | [cm³] | 36 |
| Min./max. operating pressure | [bar] | 4/6.5 |
| Nominal operating pressure | [bar] | 6 |
| Closing/opening time | [s] | 0.4/0.5 |
| Max. permitted finger length | [mm] | 60 |
| Max. permitted weight per finger | [kg] | 0.15 |
| IP class | | 67 |
| Min./max. ambient temperature | [°C] | -10/90 |
| Repeat accuracy | [mm] | 0.1 |
| **OPTIONS and their characteristics** | | |
| High-temperature version | | **3907107** |
| Min./max. ambient temperature | [°C] | -10/130 |

ⓘ The opening angle of the base jaws can be limited.

## Main view

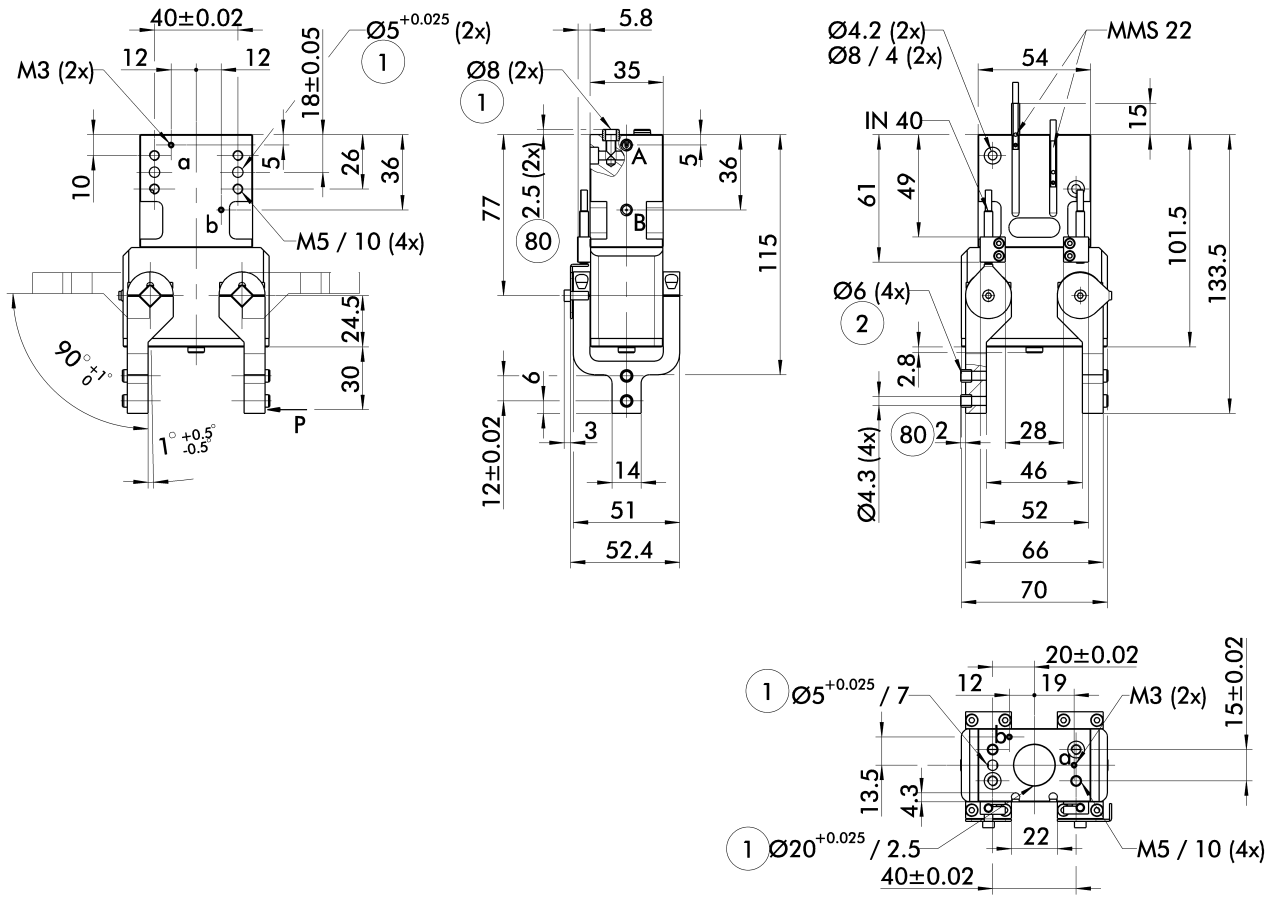


The drawing shows the gripper in the basic version with closed jaws, the dimensions do not include the options described below.

ⓘ The SDV-P pressure maintenance valve can be used as a gripping force maintenance device (see "Accessories" catalog section).

A, a Main/direct connection, gripper opening
B, b Main/direct connection, gripper closing
① Gripper connection
② Finger connection
80 Depth of the centering sleeve hole in the matching part

## Hose-free direct connection

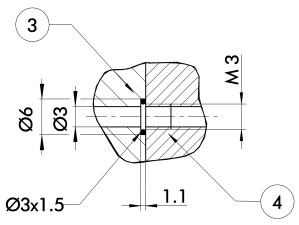


③ Adapter
④ Gripper

The direct connection is used for supplying compressed air without hoses. Instead, the pressure medium is fed through bore-holes in the mounting plate.

## Programmable magnetic switch

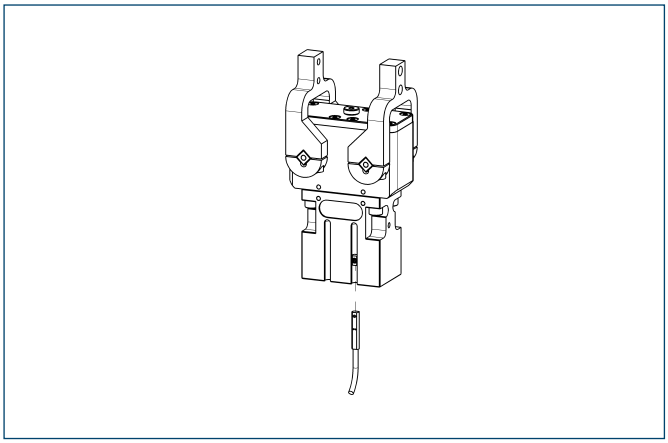

Position monitoring with two programmable positions per sensor. The end position monitoring is mounted in the C-slot.

| Description | ID | Recommended product |
|---|---|---|
| Programmable magnetic switch | | |
| MMS-P 22-S-M8-PNP | **0301370** | • |
| MMSK-P 22-S-PNP | **0301371** | |
| Connection cables | | |
| KA BG08-L 4P-0500 | **0307767** | |
| KA BG08-L 4P-1000 | **0307768** | |
| KA BW08-L 4P-0500 | **0307765** | |
| KA BW08-L 4P-1000 | **0307766** | |
| Sensor Distributor | | |
| V2-M8-4P-2XM8-3P | **0301380** | |

ⓘ Please note the minimum permitted bending radii for the sensor cables, which are generally 35 mm.

ⓘ Per gripper one sensor (closer/NO) is required, optionally a cable extension.

## Electronic magnetic switches

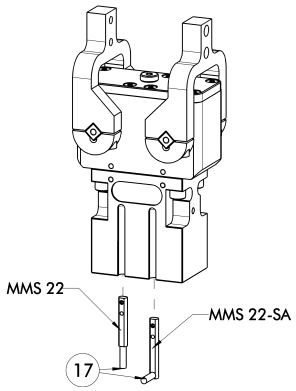


⑰ Cable outlet

End position monitoring for mounting in the C-slot

| Description | ID | Recommended product |
|---|---|---|
| Electronic magnetic switches | | |
| MMS 22-S-M5-PNP | **0301438** | |
| MMS 22-S-M5-NPN | **0301439** | |
| MMS 22-S-M8-PNP | **0301432** | • |
| MMS 22-S-M8-NPN | **0301433** | |
| MMSK 22-S-PNP | **0301434** | |
| MMSK 22-S-NPN | **0301435** | |
| Electronic magnetic switches with lateral cable outlet | | |
| MMS 22-S-M5-PNP-SA | **0301448** | |
| MMS 22-S-M5-NPN-SA | **0301449** | |
| MMS 22-S-M8-PNP-SA | **0301442** | • |
| MMS 22-S-M8-NPN-SA | **0301443** | |
| MMSK 22-S-PNP-SA | **0301444** | |
| MMSK 22-S-NPN-SA | **0301445** | |
| Reed Switches | | |
| RMS 22-S-M8 | **0377720** | • |
| Connection cables | | |
| KA BG05-L 3P-0300 | **0301652** | |
| KA BG08-L 3P-0300-PNP | **0301622** | |
| KA BG08-L 3P-0500-PNP | **0301623** | |
| KA BW05-L 3P-0300 | **0301650** | |
| KA BW08-L 3P-0300-NPN | **0301602** | |
| KA BW08-L 3P-0300-PNP | **0301594** | |
| KA BW08-L 3P-0500-NPN | **9641116** | |
| KA BW08-L 3P-0500-PNP | **0301502** | |
| Cable extensions | | |
| KV BW08-SG08 3P-0030-PNP | **0301495** | |
| KV BW08-SG08 3P-0100-PNP | **0301496** | |
| KV BW08-SG08 3P-0200-PNP | **0301497** | |

ⓘ Two sensors (closer/NO) are required for each gripper, plus extension cables as an option.

ⓘ Please note the minimum permitted bending radii for the sensor cables, which are generally 35 mm.

You can find more detailed information and individual parts of the above-mentioned accessories in the “Accessories” catalog section.

## Inductive proximity switches

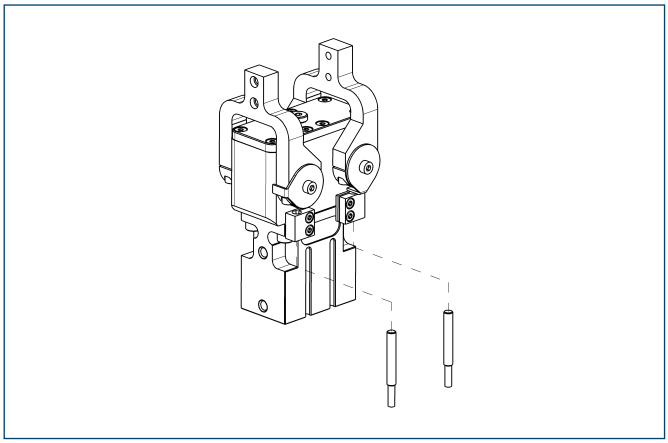

End position monitoring for direct mounting

| Description | ID | Recommended product |
|---|---|---|
| Inductive proximity switches | | |
| IN 40-S-M8 | **0301474** | • |
| IN 40-S-M12 | **0301574** | |
| INK 40-S | **0301555** | |
| IN 40-S-M5-PNP | **0301491** | |
| IN 40-S-M5-NPN | **0301492** | |
| Connection cables | | |
| KA BG05-L 3P-0300 | **0301652** | |
| KA BG08-L 3P-0300-PNP | **0301622** | |
| KA BG08-L 3P-0500-PNP | **0301623** | |
| KA BG12-L 3P-0500-PNP | **30016369** | |
| KA BW05-L 3P-0300 | **0301650** | |
| KA BW08-L 3P-0300-PNP | **0301594** | |
| KA BW08-L 3P-0500-PNP | **0301502** | |
| KA BW12-L 3P-0300-PNP | **0301503** | |
| KA BW12-L 3P-0500-PNP | **0301507** | |
| Cable extensions | | |
| KV BG12-SG12 3P-0030-PNP | **0301999** | |
| KV BG12-SG12 3P-0060-PNP | **0301998** | |
| KV BW08-SG08 3P-0030-PNP | **0301495** | |
| KV BW08-SG08 3P-0100-PNP | **0301496** | |
| KV BW08-SG08 3P-0200-PNP | **0301497** | |
| KV BW12-SG12 3P-0030-PNP | **0301595** | |
| KV BW12-SG12 3P-0100-PNP | **0301596** | |
| KV BW12-SG12 3P-0200-PNP | **0301597** | |

ⓘ Two sensors (closer/NO) are required for each gripper, plus extension cables as an option.

ⓘ Please note the minimum permitted bending radii for the sensor cables, which are generally 35 mm.

## Mounting kit for proximity switch

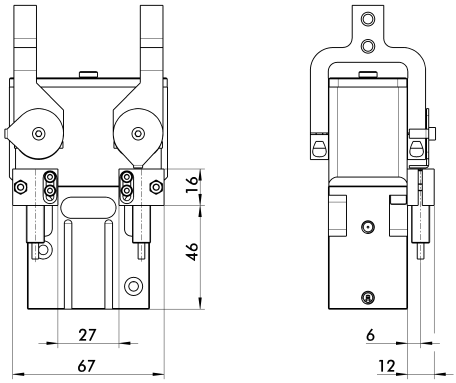


| Description | ID |
|---|---|
| Mounting kit for proximity switch | |
| AS-DRG-44-80 | **0304131** |

ⓘ This mounting kit needs to be ordered optionally as an accessory.

180°

You can find more detailed information and individual parts of the above-mentioned accessories in the “Accessories” catalog section.

## Inductive proximity switches

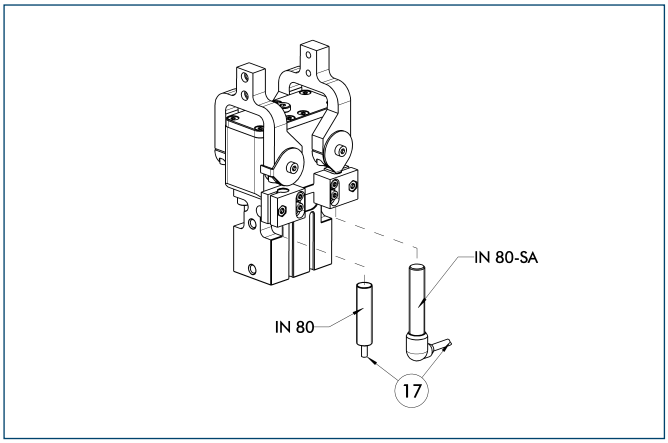


⑰ Cable outlet

End position monitoring mounted with mounting kit

| Description | ID | Recommended product |
|---|---|---|
| Mounting kit for proximity switch | | |
| AS-DRG-44-80 | **0304131** | |
| Inductive proximity switches | | |
| IN 80-S-M8 | **0301478** | • |
| IN 80-S-M12 | **0301578** | |
| INK 80-S | **0301550** | |
| Inductive proximity switch with lateral outlet | | |
| IN 80-S-M12-SA | **0301587** | |
| IN 80-S-M8-SA | **0301483** | • |
| INK 80-S-SA | **0301566** | |

ⓘ Two sensors (closer/NO) are required for each gripper, plus extension cables as an option.
ⓘ This mounting kit needs to be ordered optionally as an accessory.
ⓘ Please note the minimum permitted bending radii for the sensor cables, which are generally 35 mm.

You can find more detailed information and individual parts of the above-mentioned accessories in the “Accessories” catalog section.

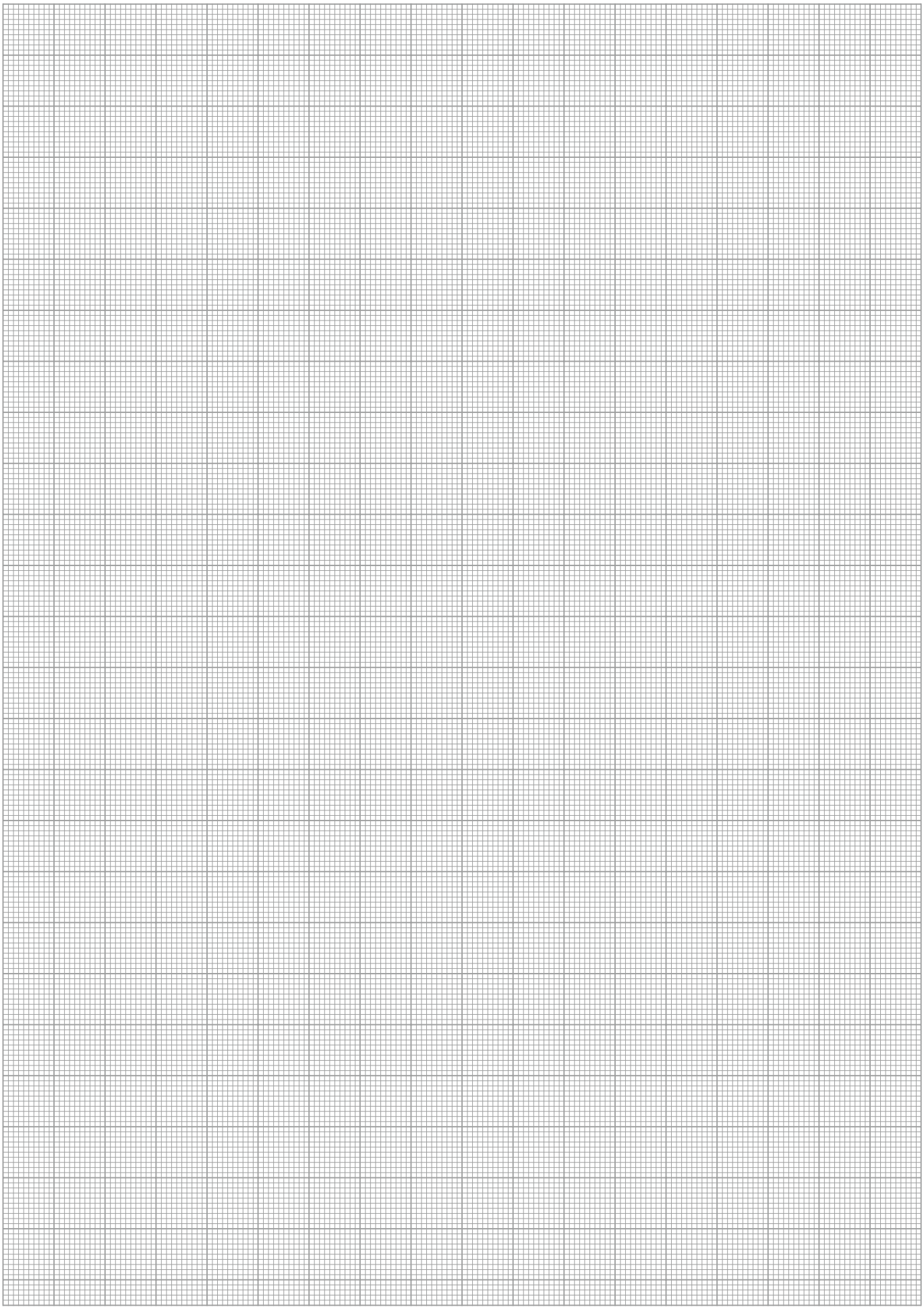

# DRG 64

**Pneumatic • 2-Finger Radial Gripper • Sealed Gripper**

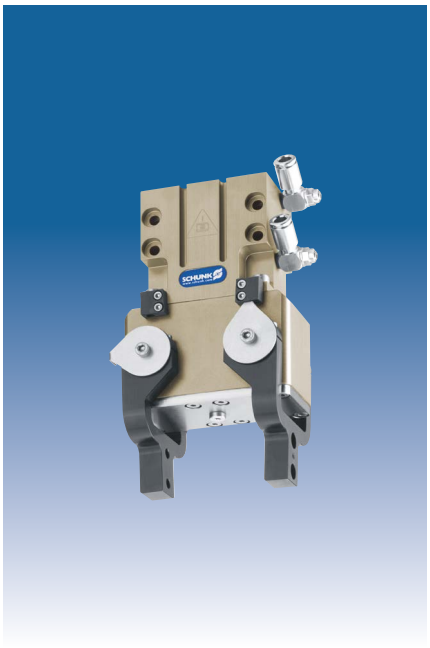

## Gripping force, O.D. gripping

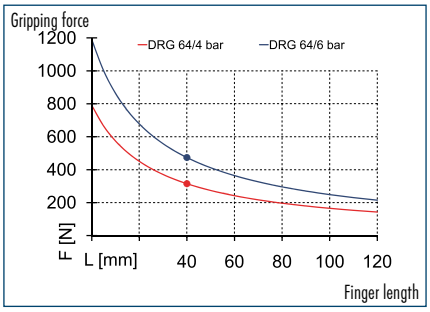


## Finger load

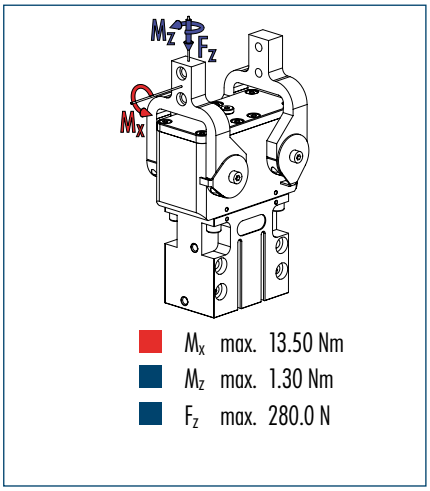


ⓘ The indicated moments and forces are statical values, apply for each base jaw and should not appear simultaneously. If the maximum admissible finger weight is exceeded, throttling is necessary in order to ensure a smooth jaw motion without jerks or bounces. The life-time may reduce.

## Technical data

| Description | | DRG 64 |
|---|---|---|
| **ID** | | **0307108** |
| Opening angle per jaw | [°] | 90 |
| Closed angle per jaw up to | [°] | 1.5 |
| Closing moment | [Nm] | 31.5 |
| Spring-actuated closing moment | [Nm] | 5.1 |
| Weight | [kg] | 1.15 |
| Recommended workpiece weight | [kg] | 2.4 |
| Air consumption per double stroke | [cm³] | 57 |
| Min./max. operating pressure | [bar] | 4/6.5 |
| Nominal operating pressure | [bar] | 6 |
| Closing/opening time | [s] | 0.4/0.5 |
| Max. permitted finger length | [mm] | 80 |
| Max. permitted weight per finger | [kg] | 0.26 |
| IP class | | 67 |
| Min./max. ambient temperature | [°C] | -10/90 |
| Repeat accuracy | [mm] | 0.1 |
| **OPTIONS and their characteristics** | | |
| High-temperature version | | **39307108** |
| Min./max. ambient temperature | [°C] | -10/130 |

ⓘ The opening angle of the base jaws can be limited.

## Main view

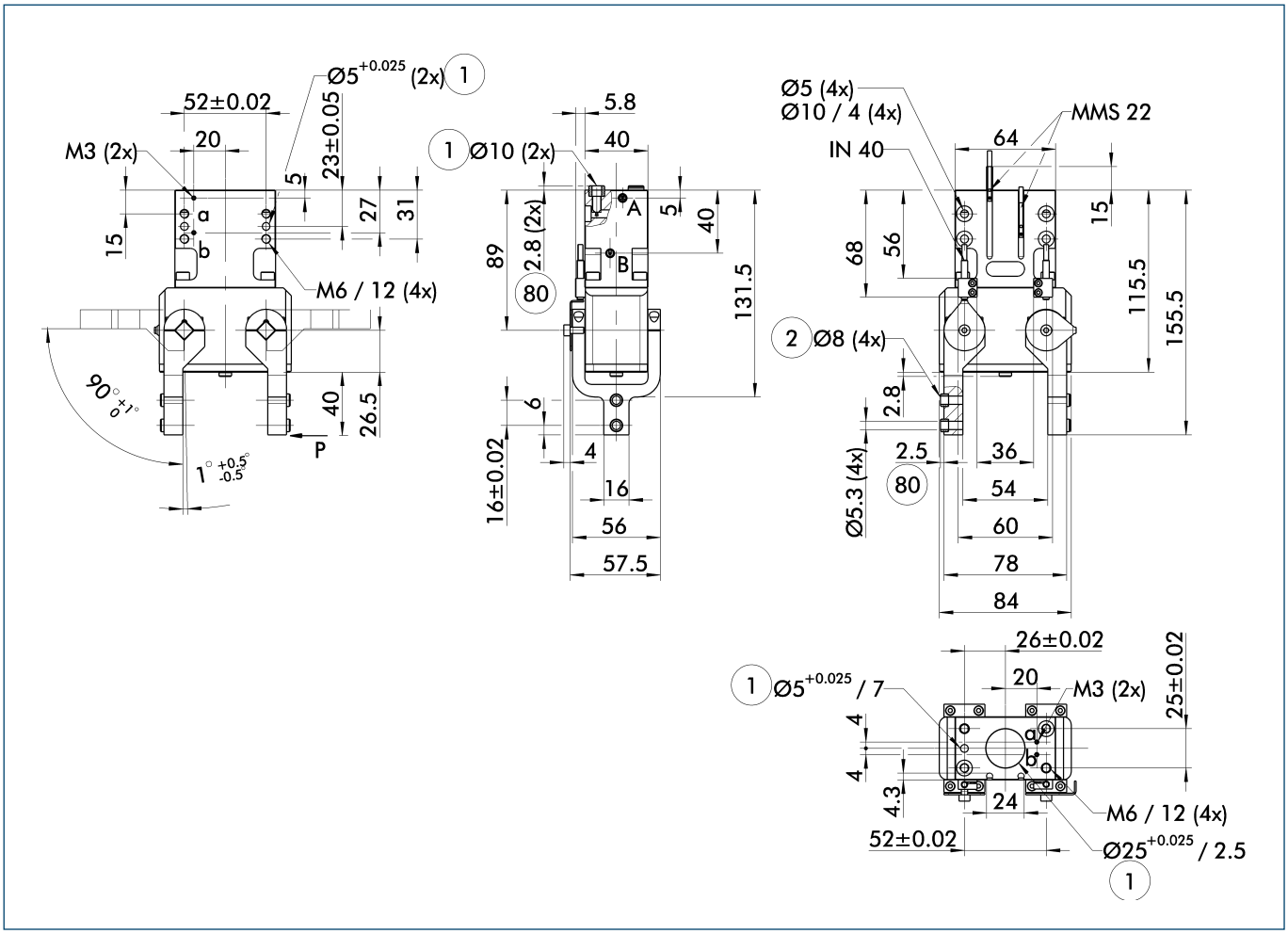


The drawing shows the gripper in the basic version with closed jaws, the dimensions do not include the options described below.

ⓘ The SDV-P pressure maintenance valve can be used as a gripping force maintenance device (see "Accessories" catalog section).

A, a Main/direct connection, gripper opening
B, b Main/direct connection, gripper closing
① Gripper connection
② Finger connection
80 Depth of the centering sleeve hole in the matching part

## Hose-free direct connection

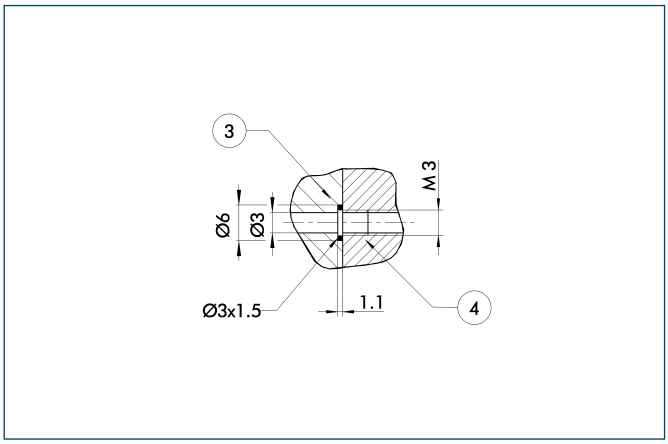


③ Adapter
④ Gripper

The direct connection is used for supplying compressed air without hoses. Instead, the pressure medium is fed through bore-holes in the mounting plate.

## Programmable magnetic switch

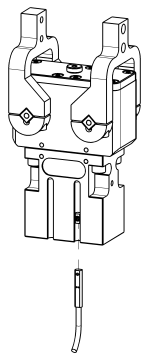

Position monitoring with two programmable positions per sensor. The end position monitoring is mounted in the C-slot.

| Description | ID | Recommended product |
|---|---|---|
| Programmable magnetic switch | | |
| MMS-P 22-S-M8-PNP | **0301370** | • |
| MMSK-P 22-S-PNP | **0301371** | |
| Connection cables | | |
| KA BG08-L 4P-0500 | **0307767** | |
| KA BG08-L 4P-1000 | **0307768** | |
| KA BW08-L 4P-0500 | **0307765** | |
| KA BW08-L 4P-1000 | **0307766** | |
| Sensor Distributor | | |
| V2-M8-4P-2XM8-3P | **0301380** | |

ⓘ Please note the minimum permitted bending radii for the sensor cables, which are generally 35 mm.

ⓘ Per gripper one sensor (closer/NO) is required, optionally a cable extension.

## Electronic magnetic switches

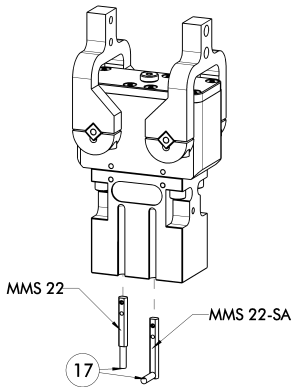


⑰ Cable outlet

End position monitoring for mounting in the C-slot

| Description | ID | Recommended product |
|---|---|---|
| Electronic magnetic switches | | |
| MMS 22-S-M5-PNP | **0301438** | |
| MMS 22-S-M5-NPN | **0301439** | |
| MMS 22-S-M8-PNP | **0301432** | • |
| MMS 22-S-M8-NPN | **0301433** | |
| MMSK 22-S-PNP | **0301434** | |
| MMSK 22-S-NPN | **0301435** | |
| Electronic magnetic switches with lateral cable outlet | | |
| MMS 22-S-M5-PNP-SA | **0301448** | |
| MMS 22-S-M5-NPN-SA | **0301449** | |
| MMS 22-S-M8-PNP-SA | **0301442** | • |
| MMS 22-S-M8-NPN-SA | **0301443** | |
| MMSK 22-S-PNP-SA | **0301444** | |
| MMSK 22-S-NPN-SA | **0301445** | |
| Reed Switches | | |
| RMS 22-S-M8 | **0377720** | • |
| Connection cables | | |
| KA BG05-L 3P-0300 | **0301652** | |
| KA BG08-L 3P-0300-PNP | **0301622** | |
| KA BG08-L 3P-0500-PNP | **0301623** | |
| KA BW05-L 3P-0300 | **0301650** | |
| KA BW08-L 3P-0300-NPN | **0301602** | |
| KA BW08-L 3P-0300-PNP | **0301594** | |
| KA BW08-L 3P-0500-NPN | **9641116** | |
| KA BW08-L 3P-0500-PNP | **0301502** | |
| Cable extensions | | |
| KV BW08-SG08 3P-0030-PNP | **0301495** | |
| KV BW08-SG08 3P-0100-PNP | **0301496** | |
| KV BW08-SG08 3P-0200-PNP | **0301497** | |

ⓘ Two sensors (closer/NO) are required for each gripper, plus extension cables as an option.

ⓘ Please note the minimum permitted bending radii for the sensor cables, which are generally 35 mm.

You can find more detailed information and individual parts of the above-mentioned accessories in the “Accessories” catalog section.

## Inductive proximity switches

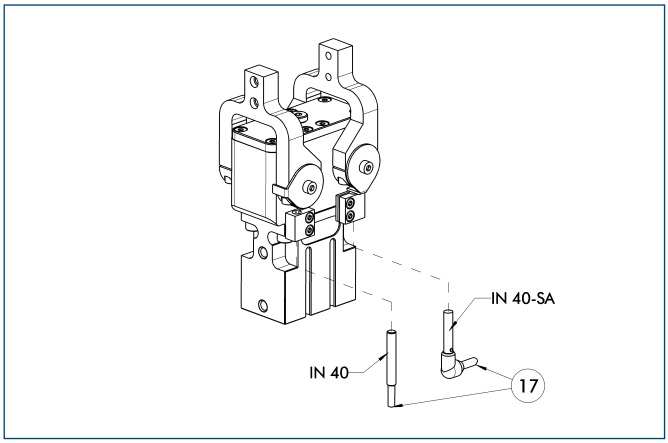


⑰ Cable outlet

End position monitoring for direct mounting

| Description | ID | Recommended product |
|---|---|---|
| Inductive proximity switches | | |
| IN 40-S-M8 | **0301474** | • |
| IN 40-S-M12 | **0301574** | |
| INK 40-S | **0301555** | |
| IN 40-O-M8 | **0301484** | |
| IN 40-O-M12 | **0301584** | |
| INK 40-O | **0301556** | |
| IN 40-S-M5-PNP | **0301491** | |
| IN 40-S-M5-NPN | **0301492** | |
| Inductive proximity switch with lateral outlet | | |
| IN 40-S-M12-SA | **0301577** | |
| IN 40-S-M8-SA | **0301473** | • |
| INK 40-S-SA | **0301565** | |
| Connection cables | | |
| KA BG05-L 3P-0300 | **0301652** | |
| KA BG08-L 3P-0300-PNP | **0301622** | |
| KA BG08-L 3P-0500-PNP | **0301623** | |
| KA BG12-L 3P-0500-PNP | **30016369** | |
| KA BW05-L 3P-0300 | **0301650** | |
| KA BW08-L 3P-0300-PNP | **0301594** | |
| KA BW08-L 3P-0500-PNP | **0301502** | |
| KA BW12-L 3P-0300-PNP | **0301503** | |
| KA BW12-L 3P-0500-PNP | **0301507** | |
| Cable extensions | | |
| KV BG12-SG12 3P-0030-PNP | **0301999** | |
| KV BG12-SG12 3P-0060-PNP | **0301998** | |
| KV BW08-SG08 3P-0030-PNP | **0301495** | |
| KV BW08-SG08 3P-0100-PNP | **0301496** | |
| KV BW08-SG08 3P-0200-PNP | **0301497** | |
| KV BW12-SG12 3P-0030-PNP | **0301595** | |
| KV BW12-SG12 3P-0100-PNP | **0301596** | |
| KV BW12-SG12 3P-0200-PNP | **0301597** | |

ⓘ Two sensors (closer/NO) are required for each gripper, plus extension cables as an option.

ⓘ Please note the minimum permitted bending radii for the sensor cables, which are generally 35 mm.

## Mounting kit for proximity switch

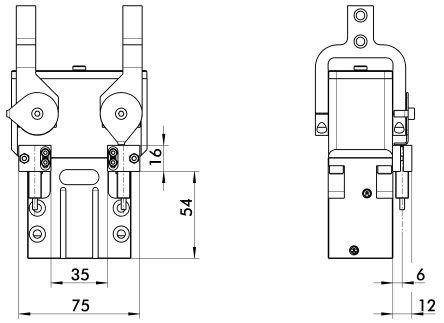


The mounting kit consists of brackets and the appropriate fastening materials. Proximity switches have to be ordered separately.

| Description | ID |
|---|---|
| Mounting kit for proximity switch | |
| AS-DRG-44-80 | **0304131** |

ⓘ This mounting kit needs to be ordered optionally as an accessory.

180°

You can find more detailed information and individual parts of the above-mentioned accessories in the “Accessories” catalog section.

## Inductive proximity switches

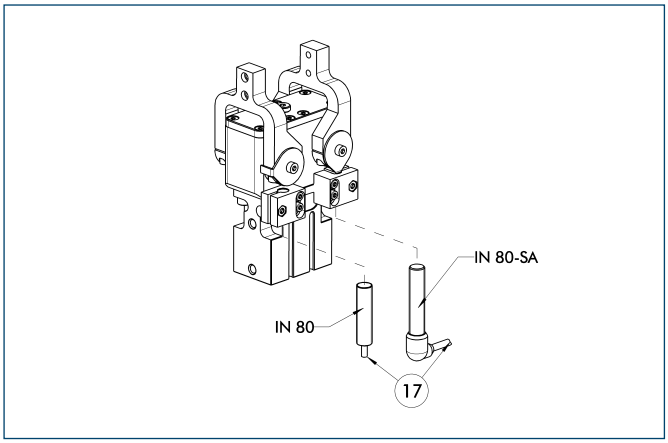


⑰ Cable outlet

End position monitoring mounted with mounting kit

| Description | ID | Recommended product |
|---|---|---|
| Mounting kit for proximity switch | | |
| AS-DRG-44-80 | **0304131** | |
| Inductive proximity switches | | |
| IN 80-S-M8 | **0301478** | • |
| IN 80-S-M12 | **0301578** | |
| INK 80-S | **0301550** | |
| Inductive proximity switch with lateral outlet | | |
| IN 80-S-M12-SA | **0301587** | |
| IN 80-S-M8-SA | **0301483** | • |
| INK 80-S-SA | **0301566** | |

ⓘ Two sensors (closer/NO) are required for each gripper, plus extension cables as an option.
ⓘ This mounting kit needs to be ordered optionally as an accessory.
ⓘ Please note the minimum permitted bending radii for the sensor cables, which are generally 35 mm.

You can find more detailed information and individual parts of the above-mentioned accessories in the “Accessories” catalog section.

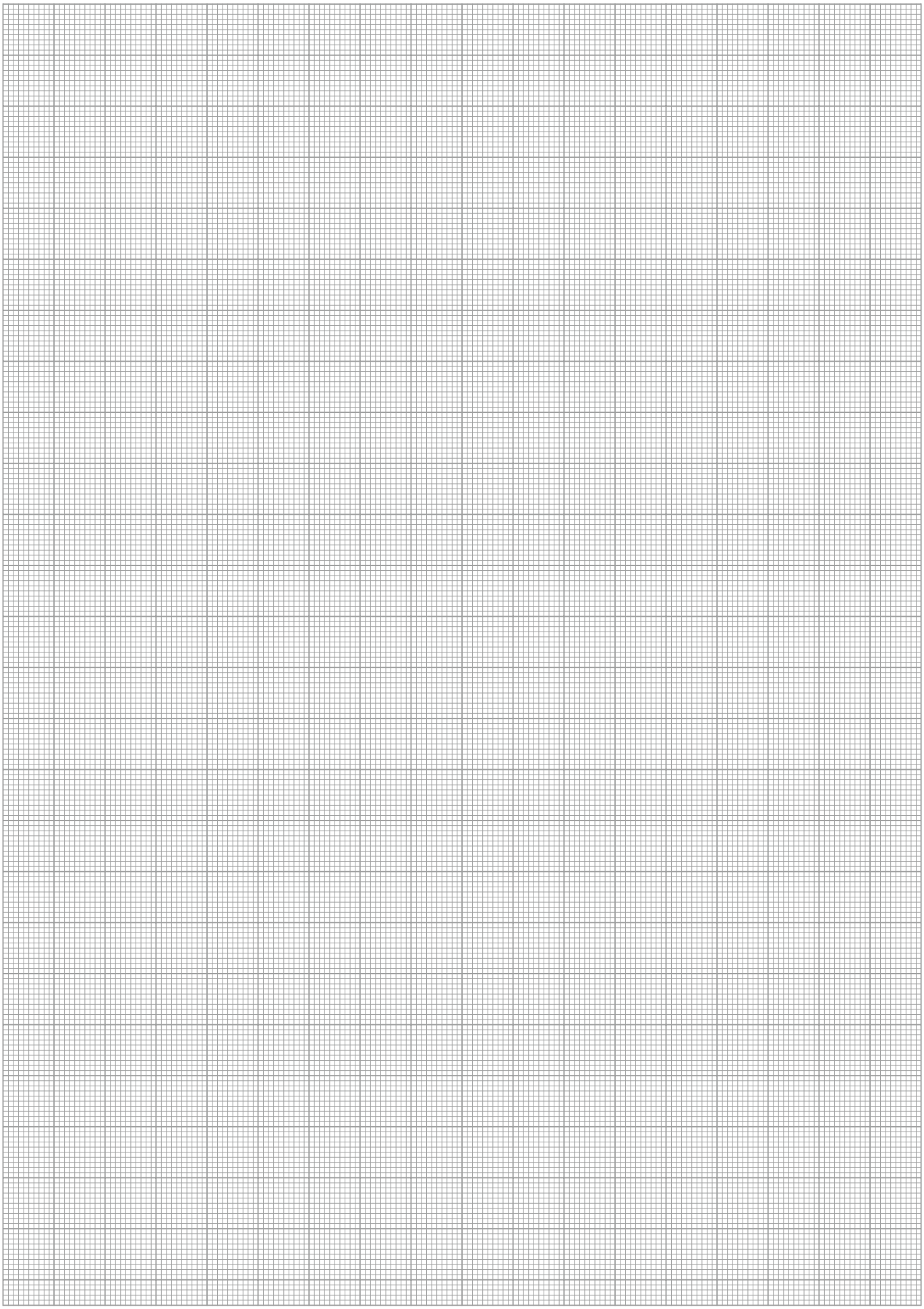

# DRG 80

**Pneumatic • 2-Finger Radial Gripper • Sealed Gripper**



## Gripping force, O.D. gripping

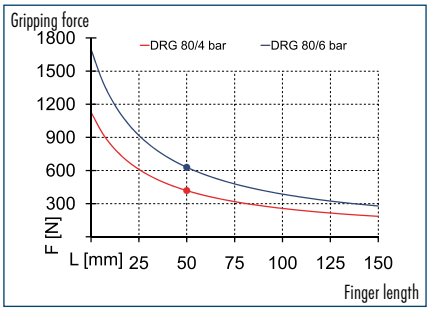


## Finger load

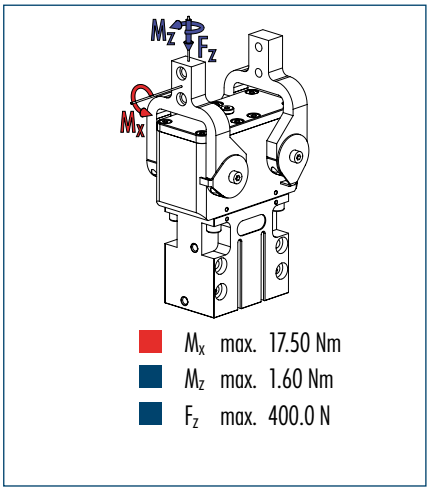


ⓘ The indicated moments and forces are statical values, apply for each base jaw and should not appear simultaneously. If the maximum admissible finger weight is exceeded, throttling is necessary in order to ensure a smooth jaw motion without jerks or bounces. The life-time may reduce.

## Technical data

| Description | | DRG 80 |
|---|---|---|
| **ID** | | **0307109** |
| Opening angle per jaw | [°] | 90 |
| Closed angle per jaw up to | [°] | 1.5 |
| Closing moment | [Nm] | 50 |
| Spring-actuated closing moment | [Nm] | 8.1 |
| Weight | [kg] | 2 |
| Recommended workpiece weight | [kg] | 3.2 |
| Air consumption per double stroke | [cm³] | 110 |
| Min./max. operating pressure | [bar] | 4/6.5 |
| Nominal operating pressure | [bar] | 6 |
| Closing/opening time | [s] | 0.5/0.6 |
| Max. permitted finger length | [mm] | 100 |
| Max. permitted weight per finger | [kg] | 0.5 |
| IP class | | 67 |
| Min./max. ambient temperature | [°C] | -10/90 |
| Repeat accuracy | [mm] | 0.1 |
| **OPTIONS and their characteristics** | | |
| High-temperature version | | **39307109** |
| Min./max. ambient temperature | [°C] | -10/130 |

ⓘ The opening angle of the base jaws can be limited.

## Main view

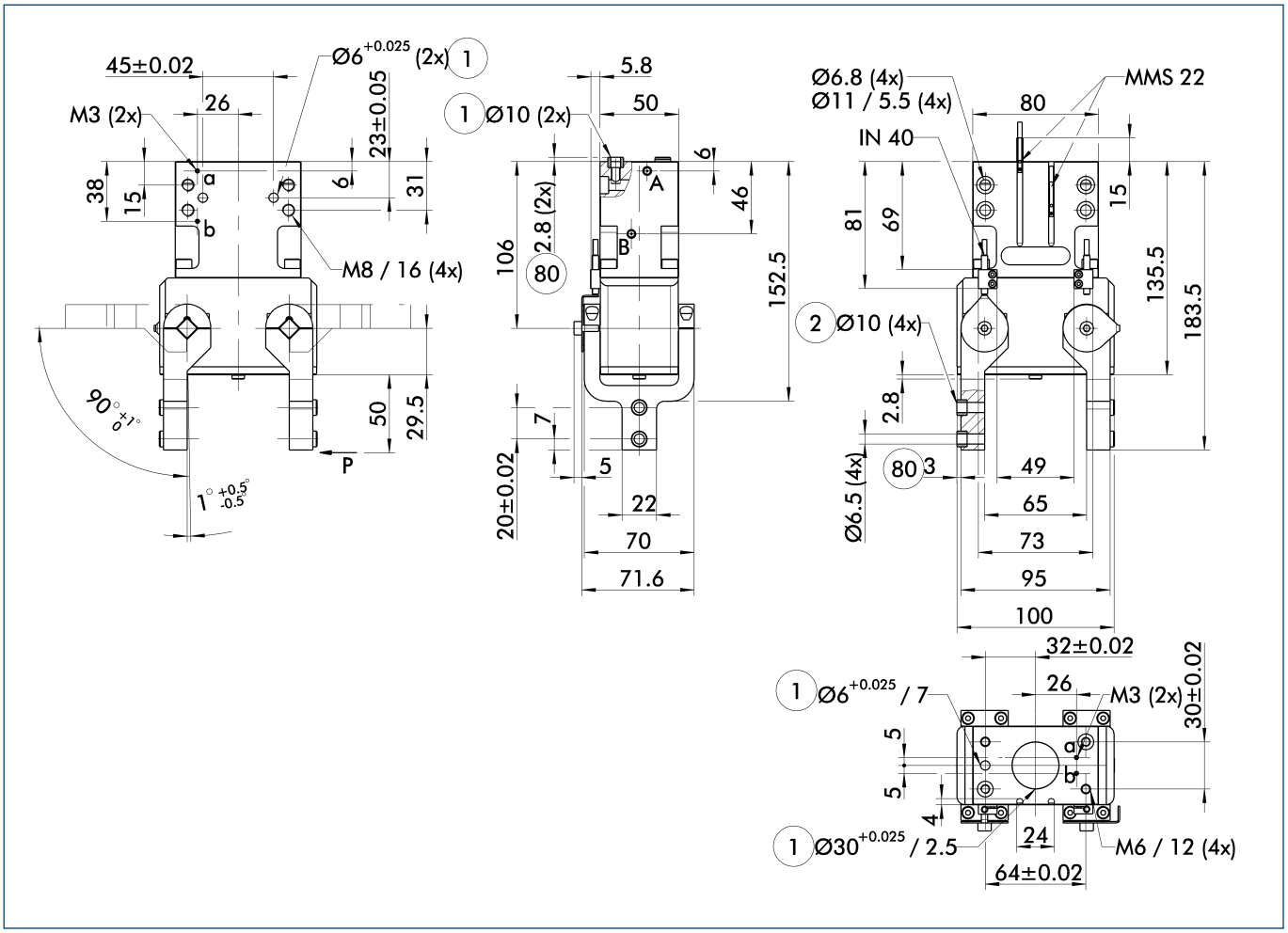


The drawing shows the gripper in the basic version with closed jaws, the dimensions do not include the options described below.

ⓘ The SDV-P pressure maintenance valve can be used as a gripping force maintenance device (see "Accessories" catalog section).

A, a Main/direct connection, gripper opening
B, b Main/direct connection, gripper closing
① Gripper connection
② Finger connection
80 Depth of the centering sleeve hole in the matching part

## Hose-free direct connection

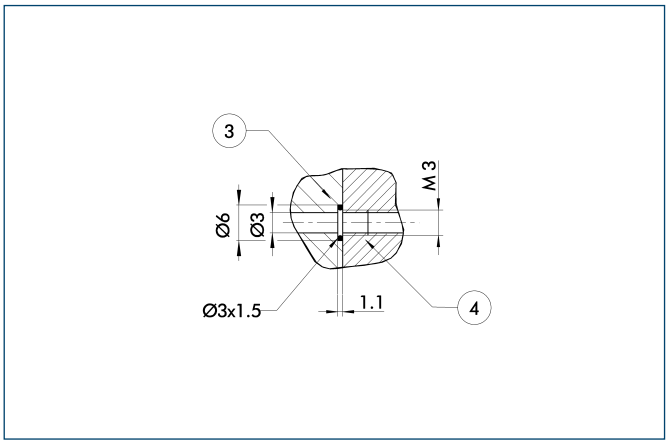


③ Adapter
④ Gripper

The direct connection is used for supplying compressed air without hoses. Instead, the pressure medium is fed through bore-holes in the mounting plate.

## Electronic magnetic switches

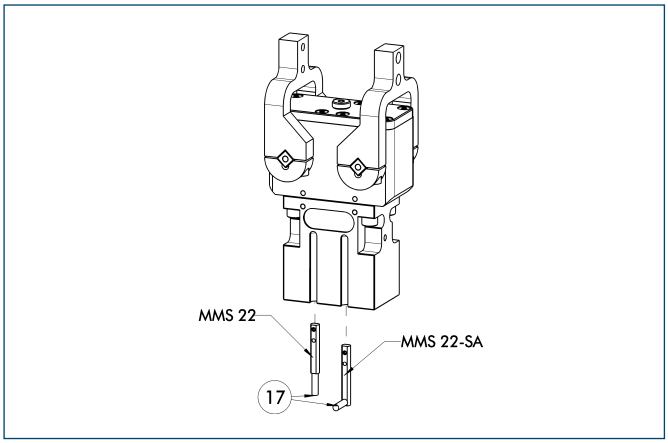


⑰ Cable outlet

End position monitoring for mounting in the C-slot

| Description | ID | Recommended product |
|---|---|---|
| Electronic magnetic switches | | |
| MMS 22-S-M5-PNP | 0301438 | |
| MMS 22-S-M5-NPN | 0301439 | |
| MMS 22-S-M8-PNP | 0301432 | • |
| MMS 22-S-M8-NPN | 0301433 | |
| MMSK 22-S-PNP | 0301434 | |
| MMSK 22-S-NPN | 0301435 | |
| Electronic magnetic switches with lateral cable outlet | | |
| MMS 22-S-M5-PNP-SA | 0301448 | |
| MMS 22-S-M5-NPN-SA | 0301449 | |
| MMS 22-S-M8-PNP-SA | 0301442 | • |
| MMS 22-S-M8-NPN-SA | 0301443 | |
| MMSK 22-S-PNP-SA | 0301444 | |
| MMSK 22-S-NPN-SA | 0301445 | |
| Reed Switches | | |
| RMS 22-S-M8 | 0377720 | • |
| Connection cables | | |
| KA BG05-L 3P-0300 | 0301652 | |
| KA BG08-L 3P-0300-PNP | 0301622 | |
| KA BG08-L 3P-0500-PNP | 0301623 | |
| KA BW05-L 3P-0300 | 0301650 | |
| KA BW08-L 3P-0300-NPN | 0301602 | |
| KA BW08-L 3P-0300-PNP | 0301594 | |
| KA BW08-L 3P-0500-NPN | 9641116 | |
| KA BW08-L 3P-0500-PNP | 0301502 | |
| Cable extensions | | |
| KV BW08-SG08 3P-0030-PNP | 0301495 | |
| KV BW08-SG08 3P-0100-PNP | 0301496 | |
| KV BW08-SG08 3P-0200-PNP | 0301497 | |

ⓘ Two sensors (closer/NO) are required for each gripper, plus extension cables as an option.

ⓘ Please note the minimum permitted bending radii for the sensor cables, which are generally 35 mm.

## Inductive proximity switches

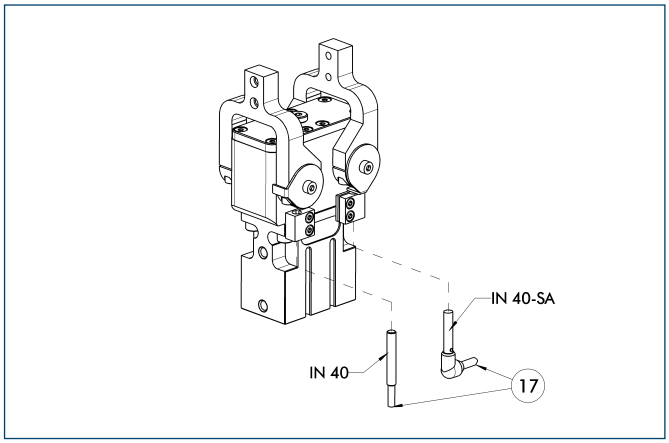


⑰ Cable outlet

End position monitoring for direct mounting

| Description | ID | Recommended product |
|---|---|---|
| Inductive proximity switches | | |
| IN 40-S-M8 | 0301474 | • |
| IN 40-S-M12 | 0301574 | |
| INK 40-S | 0301555 | |
| IN 40-S-M5-PNP | 0301491 | |
| IN 40-S-M5-NPN | 0301492 | |
| Inductive proximity switch with lateral outlet | | |
| IN 40-S-M12-SA | 0301577 | |
| IN 40-S-M8-SA | 0301473 | • |
| INK 40-S-SA | 0301565 | |
| Connection cables | | |
| KA BG05-L 3P-0300 | 0301652 | |
| KA BG08-L 3P-0300-PNP | 0301622 | |
| KA BG08-L 3P-0500-PNP | 0301623 | |
| KA BG12-L 3P-0500-PNP | 30016369 | |
| KA BW05-L 3P-0300 | 0301650 | |
| KA BW08-L 3P-0300-PNP | 0301594 | |
| KA BW08-L 3P-0500-PNP | 0301502 | |
| KA BW12-L 3P-0300-PNP | 0301503 | |
| KA BW12-L 3P-0500-PNP | 0301507 | |
| Cable extensions | | |
| KV BG12-SG12 3P-0030-PNP | 0301999 | |
| KV BG12-SG12 3P-0060-PNP | 0301998 | |
| KV BW08-SG08 3P-0030-PNP | 0301495 | |
| KV BW08-SG08 3P-0100-PNP | 0301496 | |
| KV BW08-SG08 3P-0200-PNP | 0301497 | |
| KV BW12-SG12 3P-0030-PNP | 0301595 | |
| KV BW12-SG12 3P-0100-PNP | 0301596 | |
| KV BW12-SG12 3P-0200-PNP | 0301597 | |

ⓘ Two sensors (closer/NO) are required for each gripper, plus extension cables as an option.

ⓘ Please note the minimum permitted bending radii for the sensor cables, which are generally 35 mm.

You can find more detailed information and individual parts of the above-mentioned accessories in the “Accessories” catalog section.

## Mounting kit for proximity switch

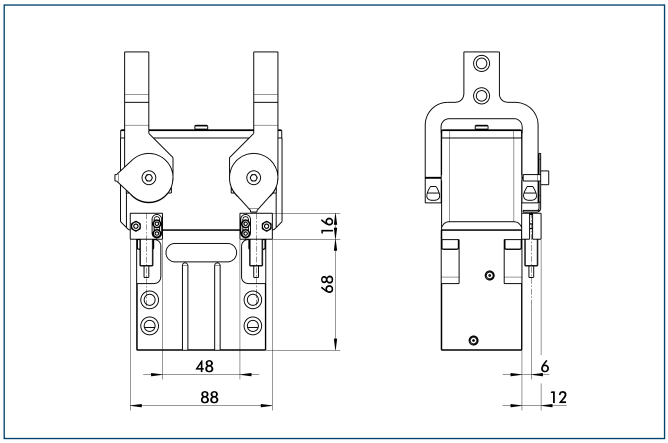


The mounting kit consists of brackets and the appropriate fastening materials. Proximity switches have to be ordered separately.

| Description | ID |
|---|---|
| Mounting kit for proximity switch | |
| AS-DRG-44-80 | **0304131** |

ⓘ This mounting kit needs to be ordered optionally as an accessory.

## Inductive proximity switches

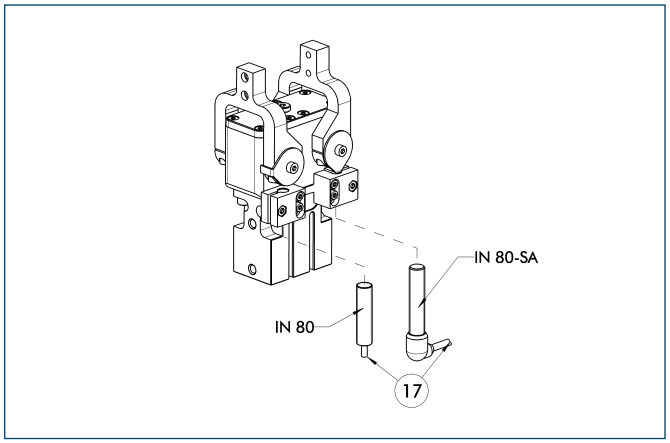


⑰ Cable outlet

End position monitoring mounted with mounting kit

| Description | ID | Recommended product |
|---|---|---|
| Mounting kit for proximity switch | | |
| AS-DRG-44-80 | **0304131** | |
| Inductive proximity switches | | |
| IN 80-S-M8 | **0301478** | • |
| IN 80-S-M12 | **0301578** | |
| INK 80-S | **0301550** | |
| Inductive proximity switch with lateral outlet | | |
| IN 80-S-M12-SA | **0301587** | |
| IN 80-S-M8-SA | **0301483** | • |
| INK 80-S-SA | **0301566** | |

ⓘ Two sensors (closer/NO) are required for each gripper, plus extension cables as an option.
ⓘ This mounting kit needs to be ordered optionally as an accessory.
ⓘ Please note the minimum permitted bending radii for the sensor cables, which are generally 35 mm.

180°

You can find more detailed information and individual parts of the above-mentioned accessories in the “Accessories” catalog section.

# DRG 100

**Pneumatic • 2-Finger Radial Gripper • Sealed Gripper**

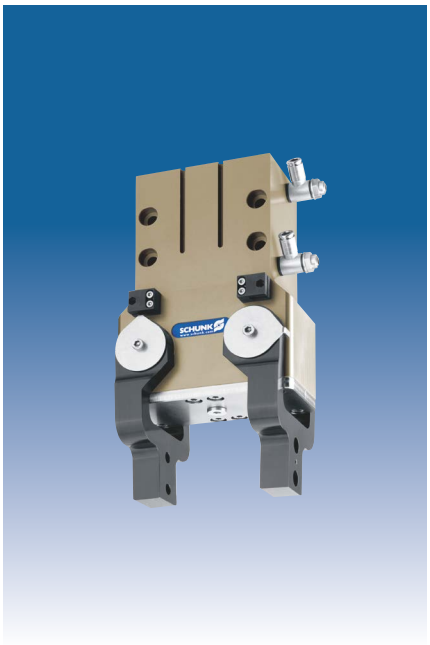

## Gripping force, O.D. gripping

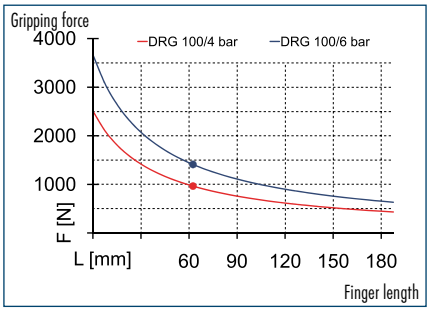


## Finger load

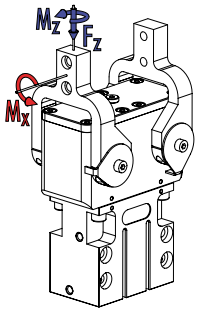


$M_x$ max. 35.00 Nm
$M_z$ max. 10.00 Nm
$F_z$ max. 1200.0 N

ⓘ The indicated moments and forces are statical values, apply for each base jaw and should not appear simultaneously. If the maximum admissible finger weight is exceeded, throttling is necessary in order to ensure a smooth jaw motion without jerks or bounces. The life-time may reduce.

## Technical data

| Description | | DRG 100 |
|---|---|---|
| **ID** | | **0307110** |
| Opening angle per jaw | [°] | 90 |
| Closed angle per jaw up to | [°] | 1.5 |
| Closing moment | [Nm] | 143 |
| Spring-actuated closing moment | [Nm] | 30 |
| Weight | [kg] | 4.46 |
| Recommended workpiece weight | [kg] | 7.2 |
| Air consumption per double stroke | [cm³] | 217 |
| Min./max. operating pressure | [bar] | 4/6.5 |
| Nominal operating pressure | [bar] | 6 |
| Closing/opening time | [s] | 0.3/0.6 |
| Max. permitted finger length | [mm] | 125 |
| Max. permitted weight per finger | [kg] | 1 |
| IP class | | 67 |
| Min./max. ambient temperature | [°C] | -10/90 |
| Repeat accuracy | [mm] | 0.1 |
| **OPTIONS and their characteristics** | | |
| High-temperature version | | **39307110** |
| Min./max. ambient temperature | [°C] | -10/130 |

ⓘ The opening angle of the base jaws can be limited.

## Main view

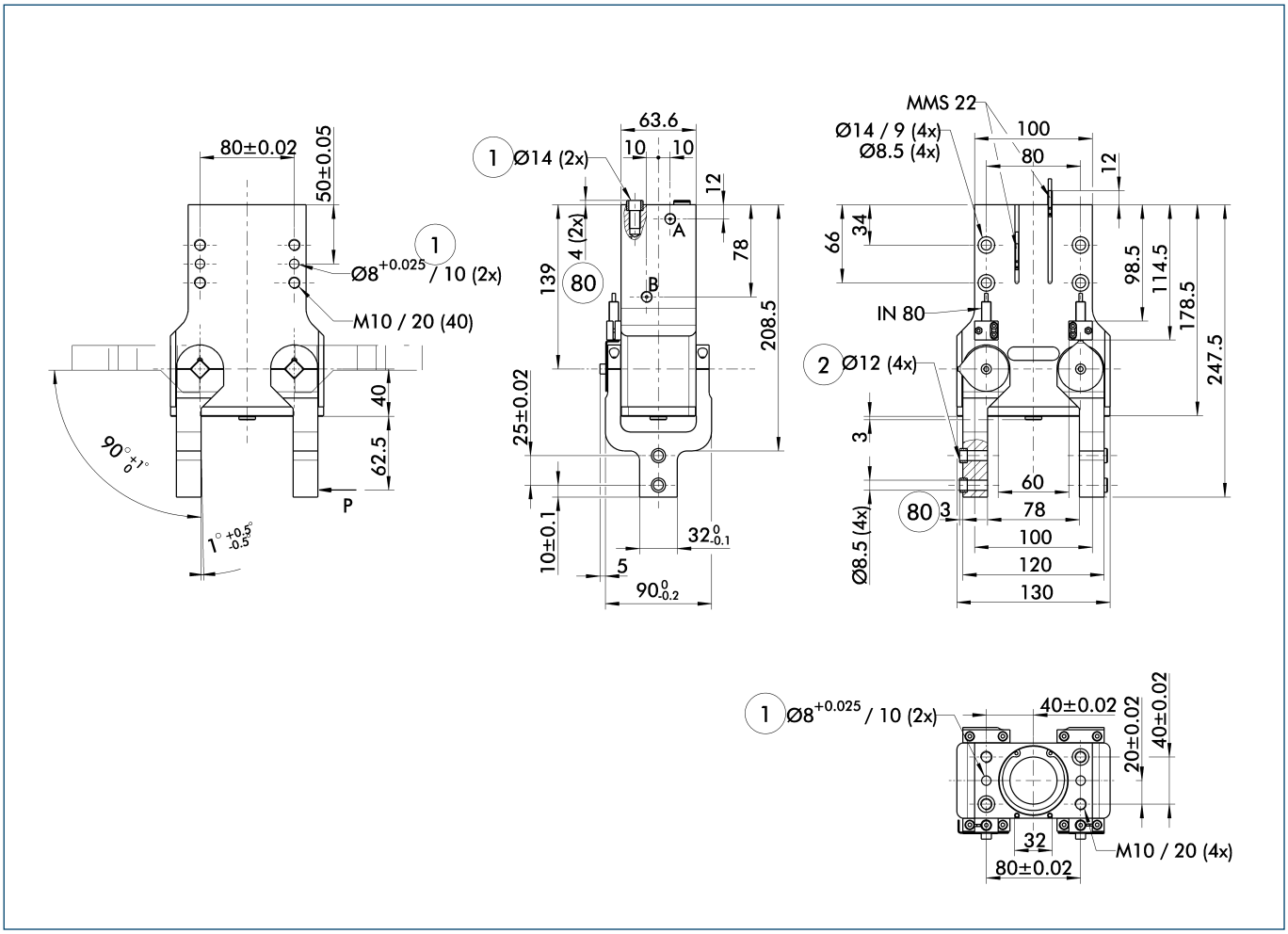


The drawing shows the gripper in the basic version with closed jaws, the dimensions do not include the options described below.

ⓘ The SDV-P pressure maintenance valve can be used as a gripping force maintenance device (see "Accessories" catalog section).

A, a Main/direct connection, gripper opening
B, b Main/direct connection, gripper closing
① Gripper connection
② Finger connection
(80) Depth of the centering sleeve hole in the matching part

## Electronic magnetic switches

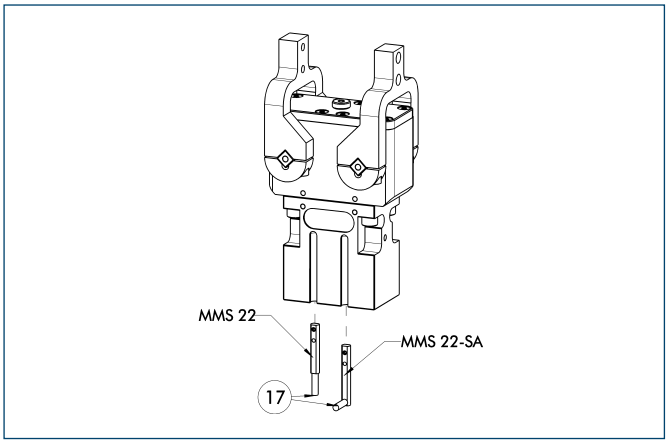


⑰ Cable outlet

End position monitoring for mounting in the C-slot

| Description | ID | Recommended product |
|---|---|---|
| Electronic magnetic switches | | |
| MMS 22-S-M5-PNP | **0301438** | |
| MMS 22-S-M5-NPN | **0301439** | |
| MMS 22-S-M8-PNP | **0301432** | • |
| MMS 22-S-M8-NPN | **0301433** | |
| MMSK 22-S-PNP | **0301434** | |
| MMSK 22-S-NPN | **0301435** | |
| Electronic magnetic switches with lateral cable outlet | | |
| MMS 22-S-M5-PNP-SA | **0301448** | |
| MMS 22-S-M5-NPN-SA | **0301449** | |
| MMS 22-S-M8-PNP-SA | **0301442** | • |
| MMS 22-S-M8-NPN-SA | **0301443** | |
| MMSK 22-S-PNP-SA | **0301444** | |
| MMSK 22-S-NPN-SA | **0301445** | |
| Reed Switches | | |
| RMS 22-S-M8 | **0377720** | • |
| Connection cables | | |
| KA BG05-L 3P-0300 | **0301652** | |
| KA BG08-L 3P-0300-PNP | **0301622** | |
| KA BG08-L 3P-0500-PNP | **0301623** | |
| KA BW05-L 3P-0300 | **0301650** | |
| KA BW08-L 3P-0300-NPN | **0301602** | |
| KA BW08-L 3P-0300-PNP | **0301594** | |
| KA BW08-L 3P-0500-NPN | **9641116** | |
| KA BW08-L 3P-0500-PNP | **0301502** | |
| Cable extensions | | |
| KV BW08-SG08 3P-0030-PNP | **0301495** | |
| KV BW08-SG08 3P-0100-PNP | **0301496** | |
| KV BW08-SG08 3P-0200-PNP | **0301497** | |

ⓘ Two sensors (closer/NO) are required for each gripper, plus extension cables as an option.

ⓘ Please note the minimum permitted bending radii for the sensor cables, which are generally 35 mm.

## Inductive proximity switches

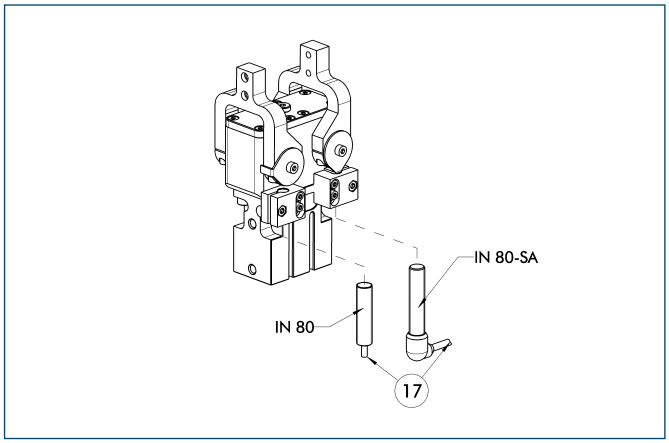


⑰ Cable outlet

End position monitoring for direct mounting

| Description | ID | Recommended product |
|---|---|---|
| Inductive proximity switches | | |
| IN 80-S-M8 | **0301478** | • |
| IN 80-S-M12 | **0301578** | |
| INK 80-S | **0301550** | |
| Inductive proximity switch with lateral outlet | | |
| IN 80-S-M12-SA | **0301587** | |
| IN 80-S-M8-SA | **0301483** | • |
| INK 80-S-SA | **0301566** | |
| Connection cables | | |
| KA BG08-L 3P-0300-PNP | **0301622** | |
| KA BG08-L 3P-0500-PNP | **0301623** | |
| KA BG12-L 3P-0500-PNP | **30016369** | |
| KA BW08-L 3P-0300-PNP | **0301594** | |
| KA BW08-L 3P-0500-PNP | **0301502** | |
| KA BW12-L 3P-0300-PNP | **0301503** | |
| KA BW12-L 3P-0500-PNP | **0301507** | |
| Cable extensions | | |
| KV BG12-SG12 3P-0030-PNP | **0301999** | |
| KV BG12-SG12 3P-0060-PNP | **0301998** | |
| KV BW08-SG08 3P-0030-PNP | **0301495** | |
| KV BW08-SG08 3P-0100-PNP | **0301496** | |
| KV BW08-SG08 3P-0200-PNP | **0301497** | |
| KV BW12-SG12 3P-0030-PNP | **0301595** | |
| KV BW12-SG12 3P-0100-PNP | **0301596** | |
| KV BW12-SG12 3P-0200-PNP | **0301597** | |

ⓘ Two sensors (closer/NO) are required for each gripper, plus extension cables as an option.

ⓘ Please note the minimum permitted bending radii for the sensor cables, which are generally 35 mm.


You can find more detailed information and individual parts of the above-mentioned accessories in the “Accessories” catalog section.

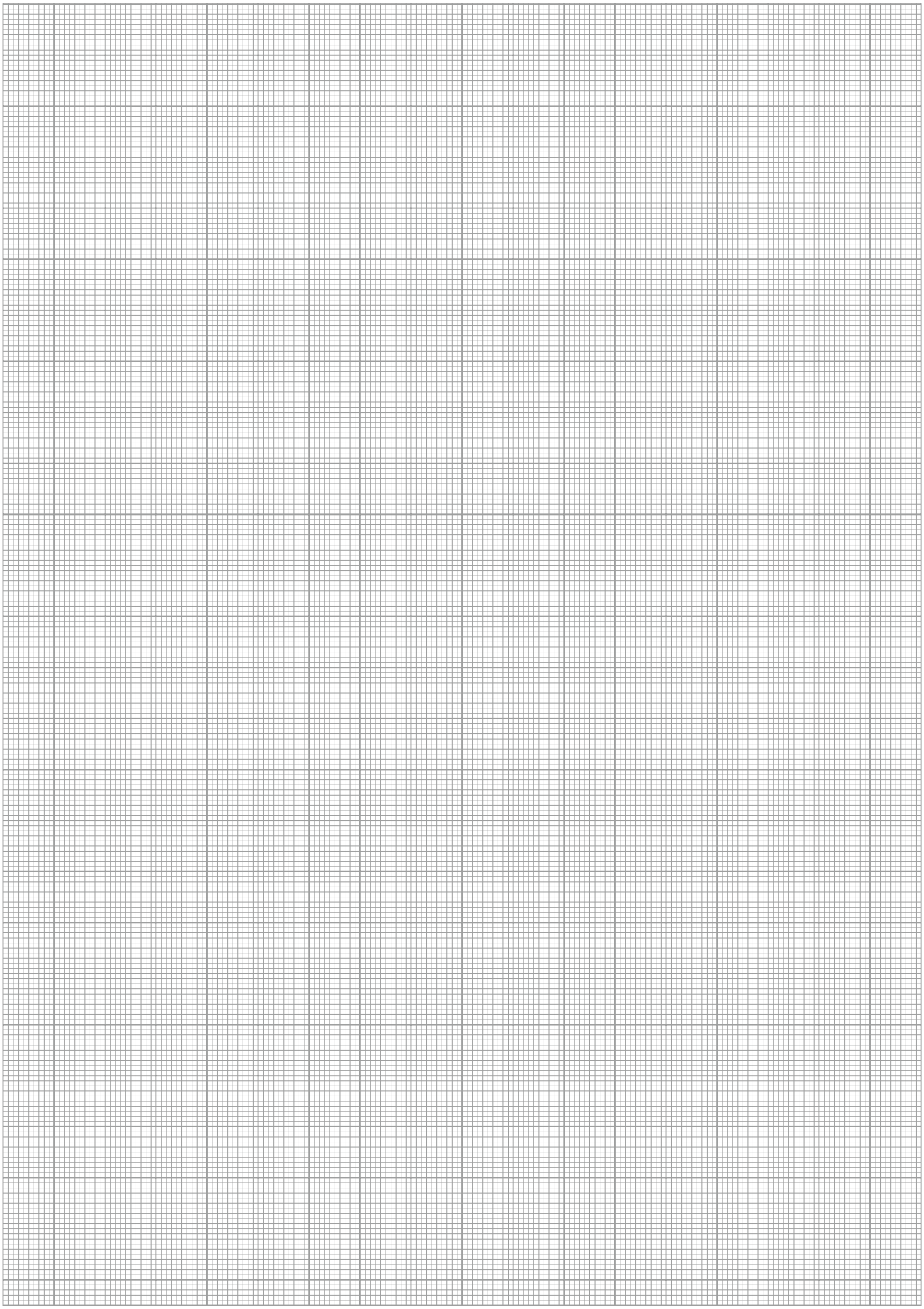

# Pneumatic Modular Gripping System



MODULAR GRIPPING SYSTEM


| Series | Size | Page |
|---|---|---|
| **KONEX** | | |
| KONEX | | 1096 |
| KONEX | P 50 | 1100 |
| KONEX | S 50 | 1104 |
| KONEX | H 50 | 1108 |

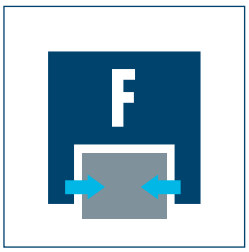


**Gripping force**
100 N

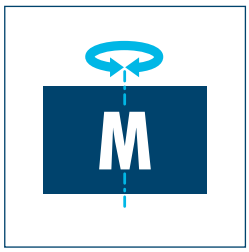


**Torque**
0.9 Nm

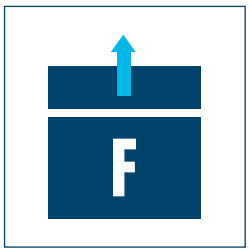


**Piston force (extended)**
250 N

## Application example

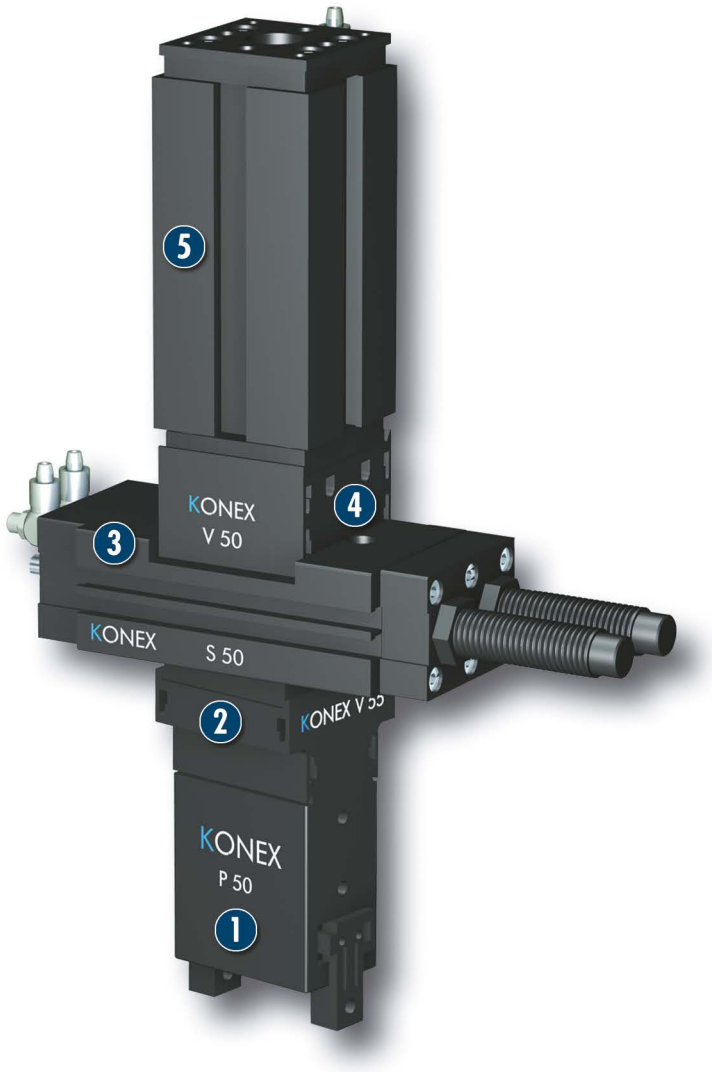


**KONEX weight-reduced, modular gripping system for economical automation in assembly and production**

1. **KONEX P 50 2-Finger Parallel Gripper**
2. **KONEX V 55 connector**
3. **KONEX S 50 Rotary Unit**
4. **KONEX V 50 connector**
5. **KONEX H 50 Linear Unit**

# Modular Gripping System

weight-reduced, low-price gripping system consisting of a linear unit, a gripper and a rotary unit connected with snap-on connectors, so that the modules do not need to be screwed in place




## Area of application

suitable for clean environments and light loads

## Your advantages and benefits

**Low-price gripping system**
comprising rotary unit, linear unit and parallel gripper

**Complete series weight-reduced through the use of a high-performance polymer**
making the modules extremely light and free from corrosion

**Simple connection of the various components using snap-on connectors**
enabling easy, fast assembly of modules

## Information about the series

**Working principle**
Pneumatic piston drive, with transmission to a pinion in the case of the rotary unit

**Housing material**
High-performance polymer

**Actuation**
Pneumatic, with filtered compressed air (10 µm): Dry, lubricated or non-lubricated
Pressure medium: Requirements on quality of the compressed air according to DIN ISO 8573-1: 6 4 4

**Warranty**
24 months

**Scope of delivery**
Brackets for proximity switches (gripper only), assembly and operating manual with manufacturer's declaration

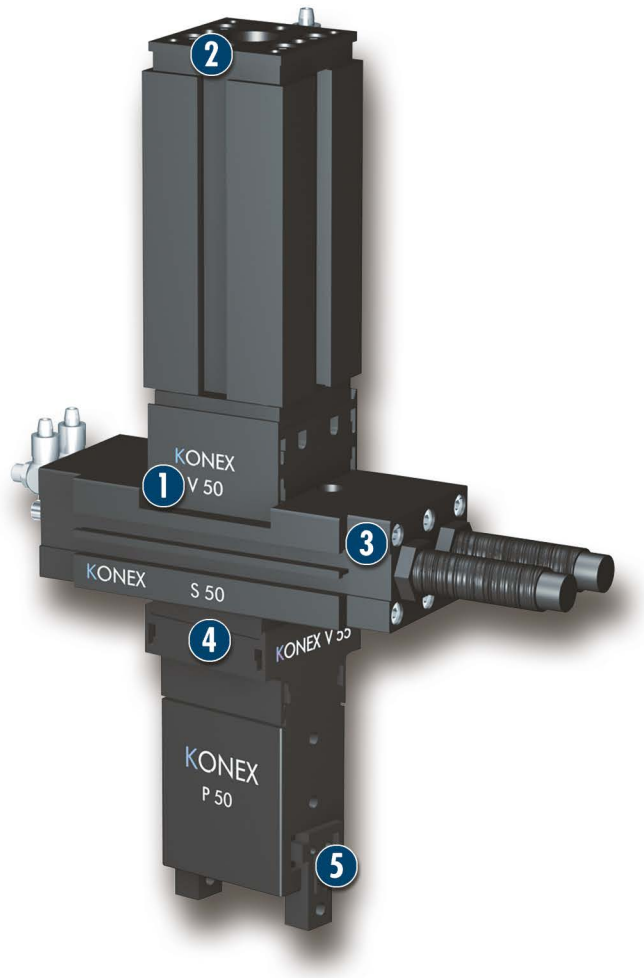


1 **V 50 connector**
for connecting linear units and rotary units in any direction, attachable at 90° intervals

2 **KONEX H**
weight-reduced Linear Unit

3 **KONEX S**
weight-reduced Rotary Unit

4 **V 55 connector**
for connecting a Rotary Unit or a Linear Unit to a Gripper, attachable at 90° intervals

5 **KONEX P**
weight-reduced Parallel Gripper

## Function description

The KONEX series works with pneumatics. The gripper functions by means of a pneumatic piston, the rotary unit on the basis of a double-piston rack and pinion principle and the linear unit through the direct connection of the lifting plate to the piston rod.

## Options and special information

Thanks to the snap-on connectors, the individual modules are mounted within seconds.

## Accessories

Accessories from SCHUNK – the suitable supplement for maximum functionality, reliability and performance of all automation modules.

### Centering sleeves

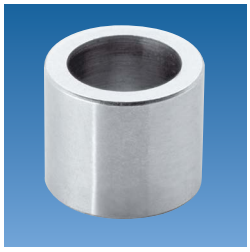

### Fittings



### MMS magnetic switches



### IN inductive proximity switches



### Quentes plastic inserts






### KV/KA sensor cables



### HKI gripper pads

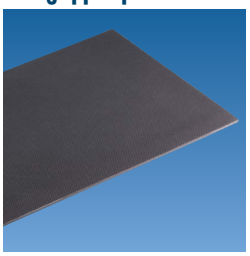

### V sensor distributors

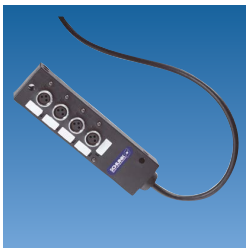

### SDV-P pressure maintenance valves



### Connector

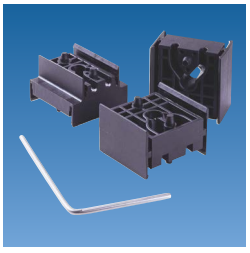

ⓘ For the exact size of the required accessories, availability of this size and the designation and ID, please refer to the additional views at the end of the size in question. You will find more detailed information on our accessory range in the "Accessories" catalog section.

## General information on the series

### Gripping force

is the arithmetic total of the gripping force applied to each base jaw at distance P (see illustration), measured from the upper edge of the gripper.

### Finger length

is measured from the upper edge of the gripper housing in the direction of the main axis.

### Repeat accuracy

is defined as the spread of the limit position after 100 consecutive strokes.

### V 50 and V 55 connectors

The linear unit is connected to the rotary unit via the V 50 connector. The gripper can be secured to the linear unit or rotary unit via the V 55 connector.

### Closing and opening times

Closing and opening times are purely the times that the base jaws or fingers are in motion. Valve switching times, hose filling times or PLC reaction times are not included in the above times and must be taken into consideration when determining cycle times.

# KONEX P 50






## Gripping force, I.D. gripping

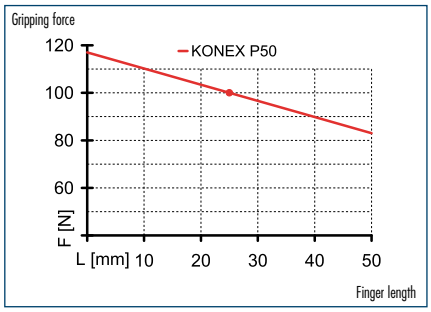


## Gripping force, O.D. gripping

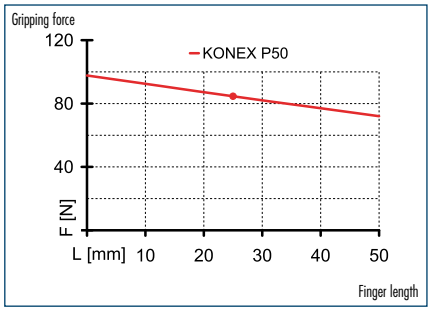


## Finger load

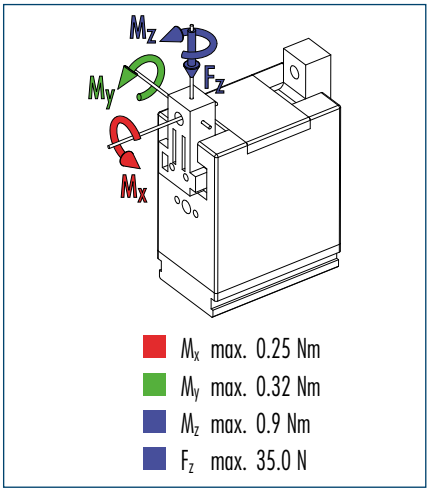


ⓘ Moments and forces apply per base jaw and may occur simultaneously. $M_y$ may arise in addition to the moment generated by the gripping force itself. If the max. permitted finger weight is exceeded, it is imperative to throttle the air pressure so that the jaw movement occurs without any hitting or bouncing. Service life may reduce.

## Technical data

| Description | | Konex P 50 |
|---|---|---|
| ID | | 0305550 |
| Stroke per finger | [mm] | 5.0 |
| Closing force | [N] | 85.0 |
| Opening force | [N] | 100.0 |
| Weight | [kg] | 0.15 |
| Recommended workpiece weight | [kg] | 0.2 |
| Air consumption per double stroke | [cm³] | 5.2 |
| Nominal pressure | [bar] | 6.0 |
| Minimum pressure | [bar] | 2.5 |
| Maximum pressure | [bar] | 6.5 |
| Closing time | [s] | 0.03 |
| Opening time | [s] | 0.025 |
| Max. permitted finger length | [mm] | 50.0 |
| Max. permitted weight per finger | [kg] | 0.05 |
| IP class | | 30 |
| Min. ambient temperature | [°C] | 5.0 |
| Max. ambient temperature | [°C] | 60.0 |
| Repeat accuracy | [mm] | 0.05 |

## Main view

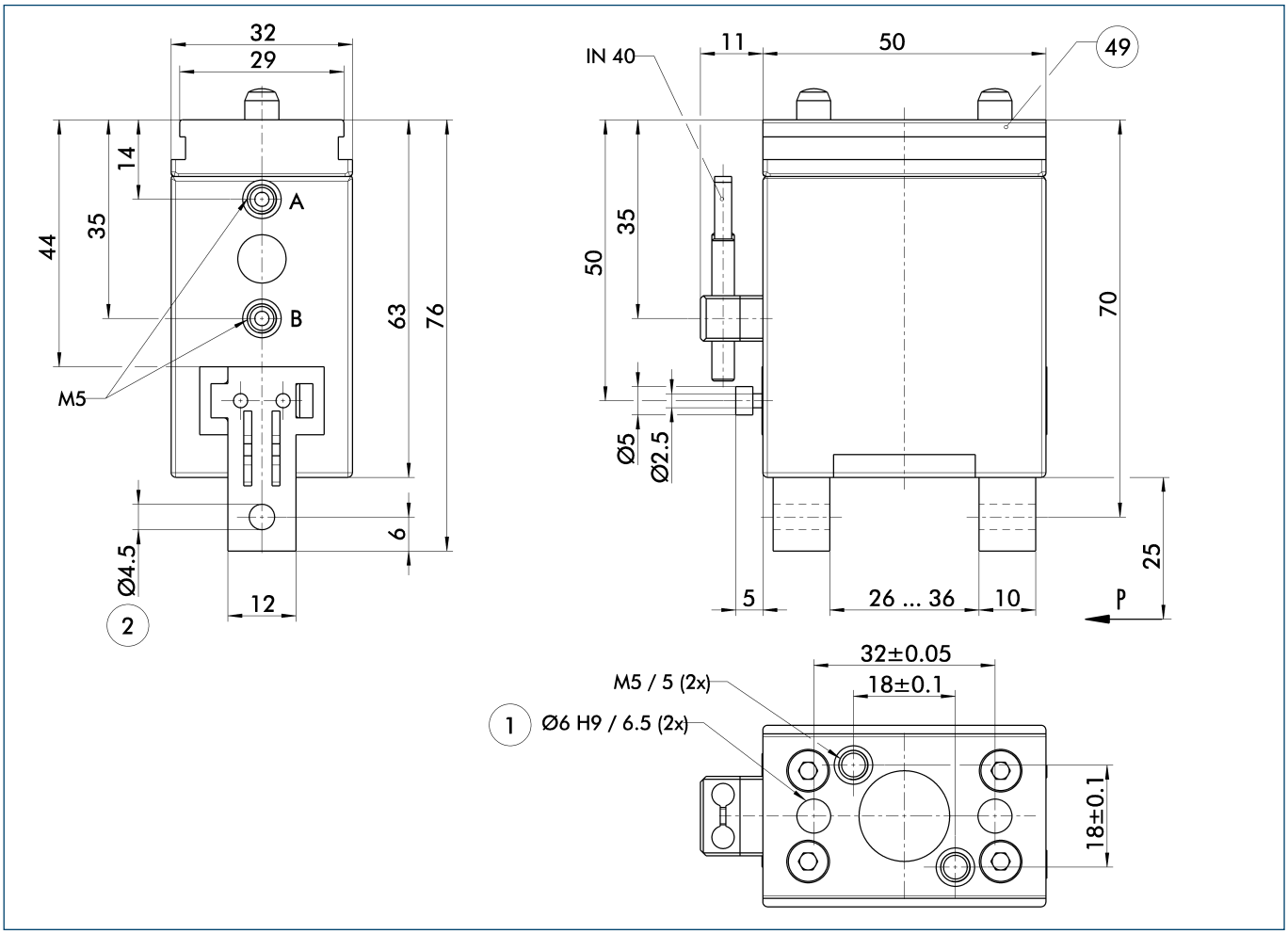


The drawing shows the unit in the basic version, the dimensions do not include the option described below.

ⓘ The SDV-P pressure maintenance valve can be used to hold the position upon a loss of pressure (see "Accessories" catalog section).

A,a Main/direct connection, gripper opening
B,b Main/direct connection, gripper closing
① Gripper connection
② Finger connection
㊾ Undercut for snap-on connection

## KONEX V 55 connecting element

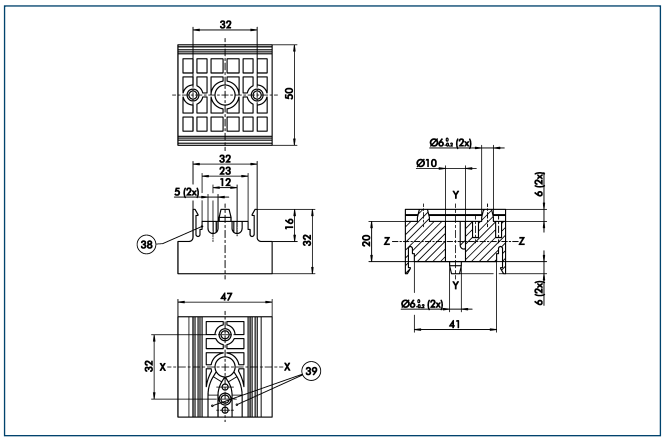


㊳ Slot for disassembly tool
㊴ Slot for air hose Ø4

Connecting element between gripper and linear unit or rotary unit

## Adapter plate

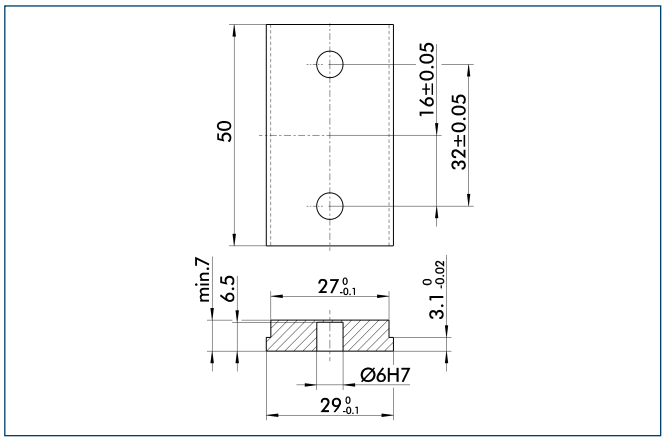


For fastening the KONEX P 50 gripper with the V 55 connecting element

## Sensor system

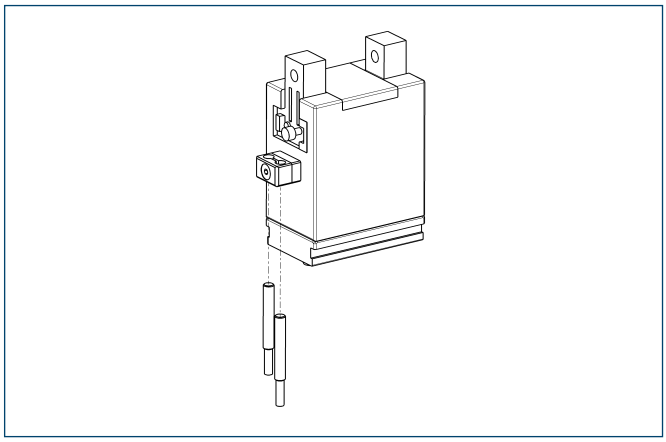

End position monitoring:
Inductive proximity switches, for direct mounting

| Description | ID | Recommended product |
|---|---|---|
| IN 40-S-M12 | 0301574 | |
| IN 40-S-M5-NPN | 0301492 | |
| IN 40-S-M5-PNP | 0301491 | |
| IN 40-S-M8 | 0301474 | • |
| INK 40-S | 0301555 | |

ⓘ Two sensors (NO contacts) are required for each gripper, plus extension cables as an option.

Extension cables for proximity switches/magnetic switches

| Description | ID |
|---|---|
| KA BG05-L 3P-0300 | 0301652 |
| KA BG08-L 3P-0300-PNP | 0301622 |
| KA BW05-L 3P-0300 | 0301650 |
| KA BW08-L 3P-0300-PNP | 0301594 |
| KA BW08-L 3P-0500-PNP | 0301502 |
| KA BW12-L 3P-0300-PNP | 0301503 |
| KA BW12-L 3P-0500-PNP | 0301507 |
| KV BW08-SG08 3P-0030-PNP | 0301495 |
| KV BW08-SG08 3P-0100-PNP | 0301496 |
| KV BW08-SG08 3P-0200-PNP | 0301497 |
| KV BW12-SG12 3P-0030-PNP | 0301595 |
| KV BW12-SG12 3P-0100-PNP | 0301596 |
| KV BW12-SG12 3P-0200-PNP | 0301597 |

ⓘ Please note the minimum permitted bending radii for the sensor cables, which are generally 35 mm.

You can find more detailed information and individual parts of the above-mentioned accessories in the “Accessories” catalog section.

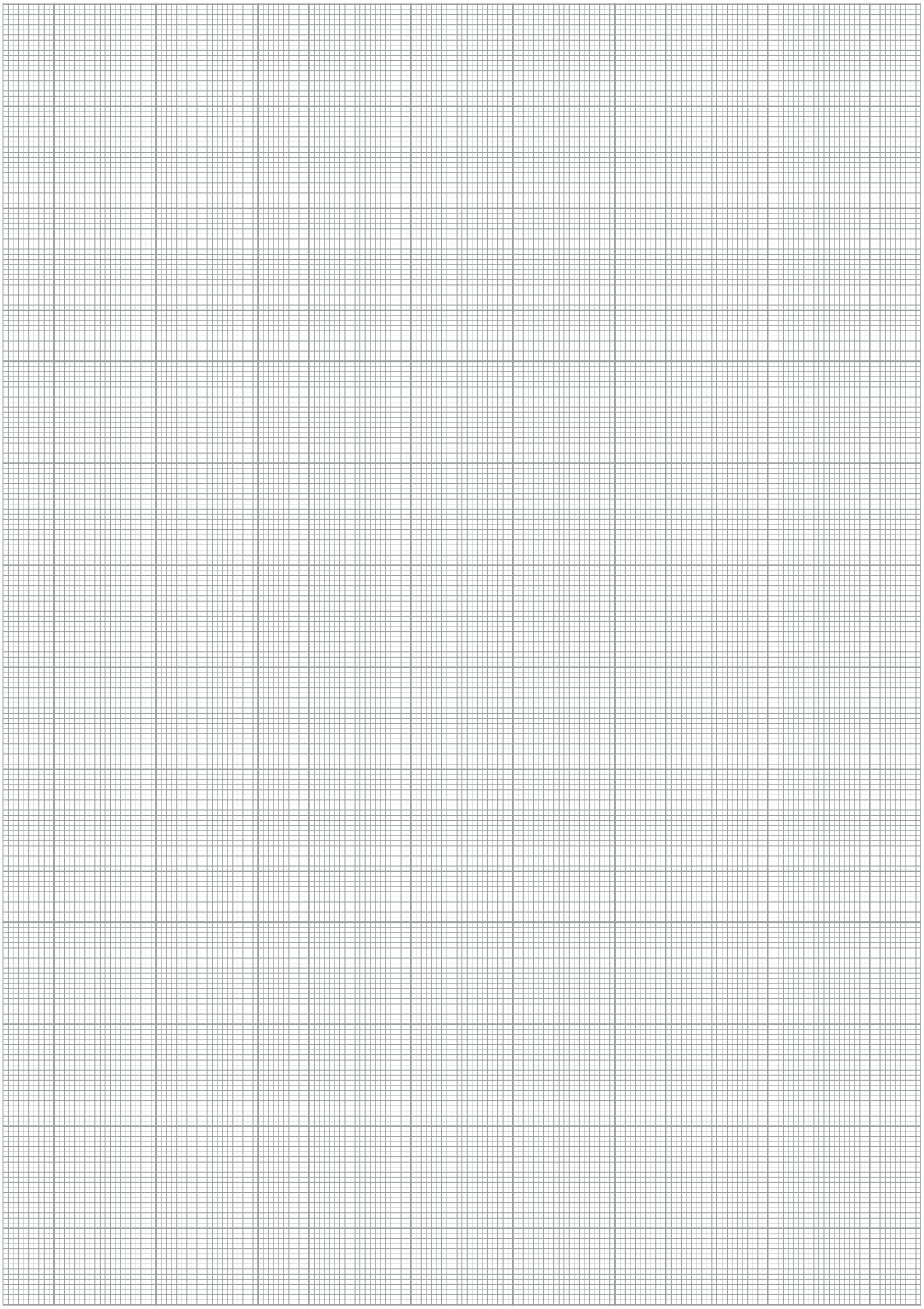

# KONEX S 50






## Pinion load

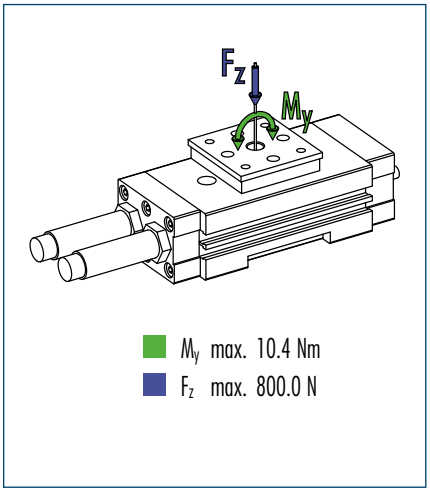


ⓘ The moment and force acting on the pinion may occur simultaneously.

## Technical data

| Description | | Konex S 50 |
|---|---|---|
| **ID** | | **0305450** |
| Torque | [Nm] | 0.9 |
| Rotating angle | [°] | 180.0 |
| End Position Adjustability | [°] | 2.0 |
| Weight | [kg] | 0.53 |
| IP class | | 40 |
| Max. permitted axial bearing load | [N] | 800.0 |
| Max. permitted radial bearing load | [Nm] | 10.4 |
| Cycle time (1x nominal angle of rotation) without attached load | [s] | 0.35 |
| Air consumption per cycle | [$cm^3$] | 10.5 |
| Min. ambient temperature | [°C] | 5.0 |
| Max. ambient temperature | [°C] | 60.0 |
| Nominal operating pressure | [bar] | 6.0 |
| Min. required operating pressure | [bar] | 2.0 |
| Max. permitted operating pressure | [bar] | 6.5 |
| Repeat accuracy | [°] | 0.2 |

## Main view

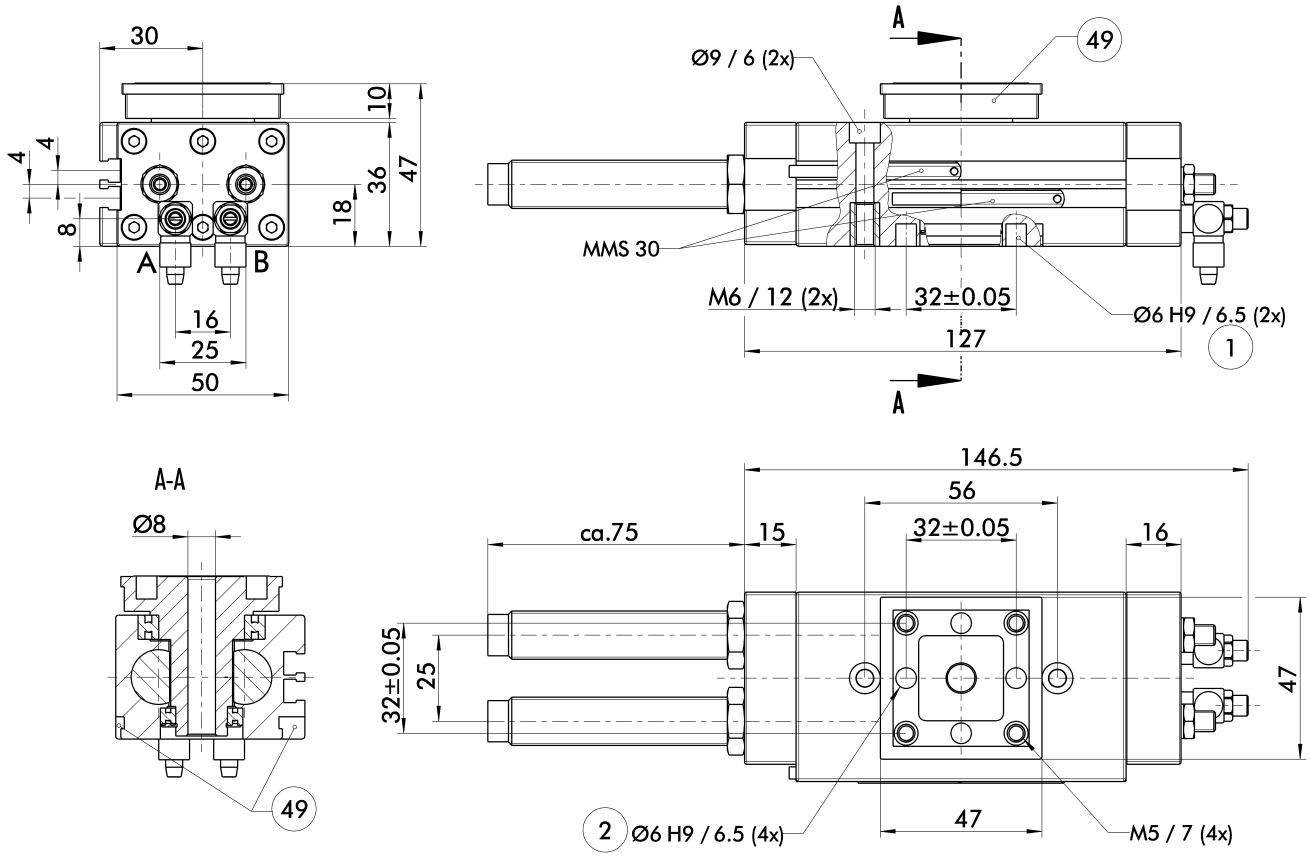


The drawing shows the unit in the basic version, the dimensions do not include the option described below.

ⓘ The SDV-P pressure maintenance valve can be used to hold the position upon a loss of pressure (see "Accessories" catalog section).

A,a Main/direct connection, clockwise rotary unit
B,b Main/direct connection, anti-clockwise rotary unit
① Rotary unit connection
② Attachment connection
㊾ Undercut for snap-on connection

## KONEX V 50 connecting element

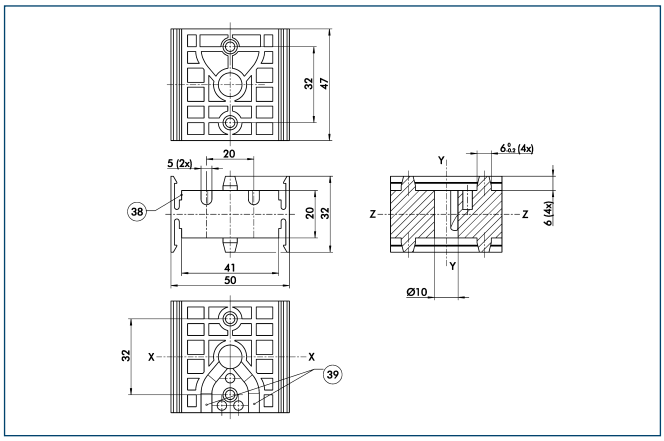


㊳ Slot for disassembly tool
㊴ Slot for air hose Ø4

Connecting element between linear unit and rotary unit

## Adapter plate

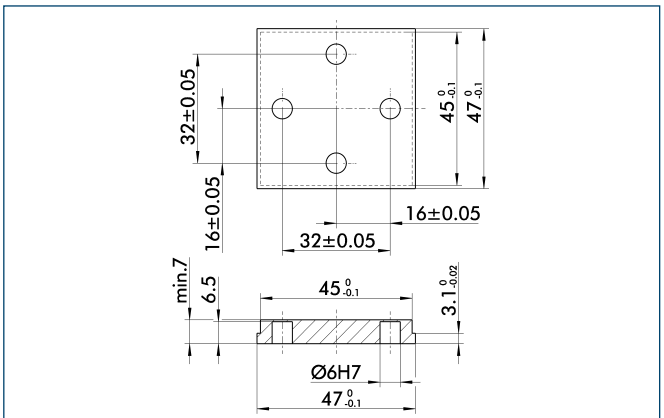


For connecting any modules you require to the linear unit or rotary unit with the V 50 connecting element

## KONEX V 55 connecting element

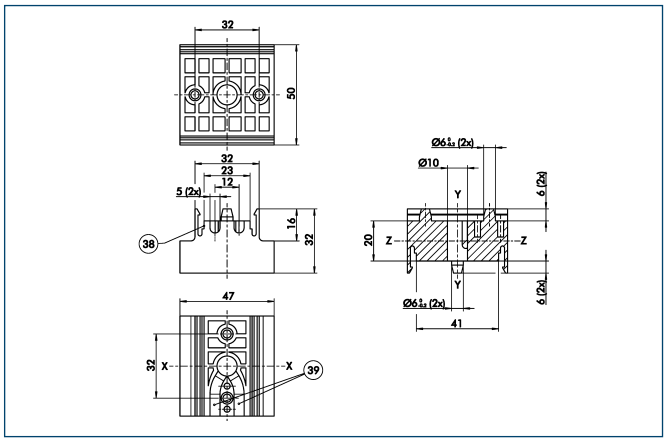


38 Slot for disassembly tool
39 Slot for air hose Ø4

Connecting element between gripper and linear unit or rotary unit

## Adapter plate

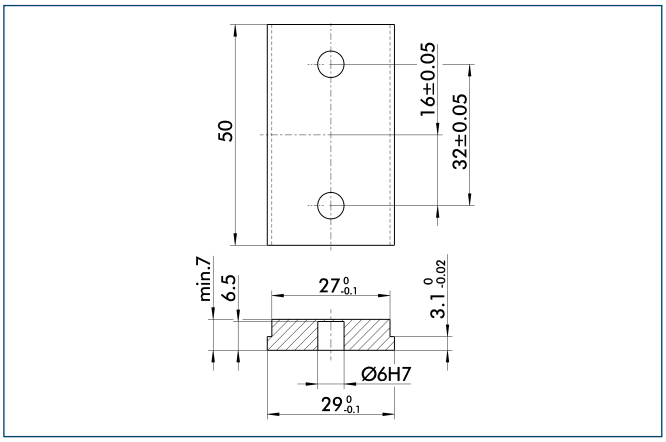


For connecting any modules you require to the linear unit or rotary unit with the V 55 connecting element

You can find more detailed information and individual parts of the above-mentioned accessories in the "Accessories" catalog section.

## Sensor system

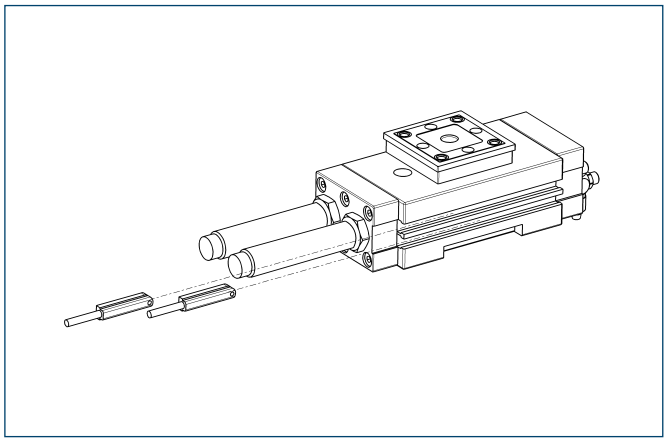

End position monitoring:
Electronic magnetic switches, for mounting in C-slot

| Description | ID | Recommended product |
|---|---|---|
| MMS 30-S-M12-PNP | 0301571 | |
| MMS 30-S-M8-PNP | 0301471 | • |
| MMSK 30-S-PNP | 0301563 | |

ⓘ Two sensors (NO contacts) are required for each unit.

Extension cables for proximity switches/magnetic switches

| Description | ID |
|---|---|
| KA BG08-L 3P-0300-PNP | 0301622 |
| KA BW08-L 3P-0300-PNP | 0301594 |
| KA BW08-L 3P-0500-PNP | 0301502 |
| KV BW08-SG08 3P-0030-PNP | 0301495 |
| KV BW08-SG08 3P-0100-PNP | 0301496 |
| KV BW08-SG08 3P-0200-PNP | 0301497 |
| KV BW12-SG12 3P-0030-PNP | 0301595 |
| KV BW12-SG12 3P-0100-PNP | 0301596 |
| KV BW12-SG12 3P-0200-PNP | 0301597 |

ⓘ Please note the minimum permitted bending radii for the sensor cables, which are generally 35 mm.

You can find more detailed information and individual parts of the above-mentioned accessories in the “Accessories” catalog section.

# KONEX H 50






## Moment load

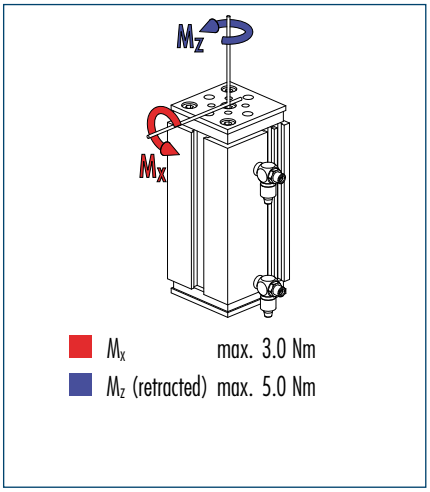


ⓘ The loading forces and moments may occur simultaneously.

## Technical data

| Description | | Konex H 50 |
|---|---|---|
| **ID** | | **0305350** |
| Extension force | [N] | 250.0 |
| Retraction force | [N] | 180.0 |
| Stroke | [mm] | 60.0 |
| Weight | [kg] | 0.45 |
| Max. permitted torsional moment (extended) | [Nm] | 2.0 |
| Air consumption per double stroke | [cm³] | 54.0 |
| Nominal operating pressure | [bar] | 6.0 |
| Max. permitted operating pressure | [bar] | 6.5 |
| Stroke time (extended) | [s] | 0.07 |
| IP class | | 42 |
| Min. ambient temperature | [°C] | 5.0 |
| Max. ambient temperature | [°C] | 60.0 |
| Repeat accuracy | [mm] | 0.2 |

## Main view

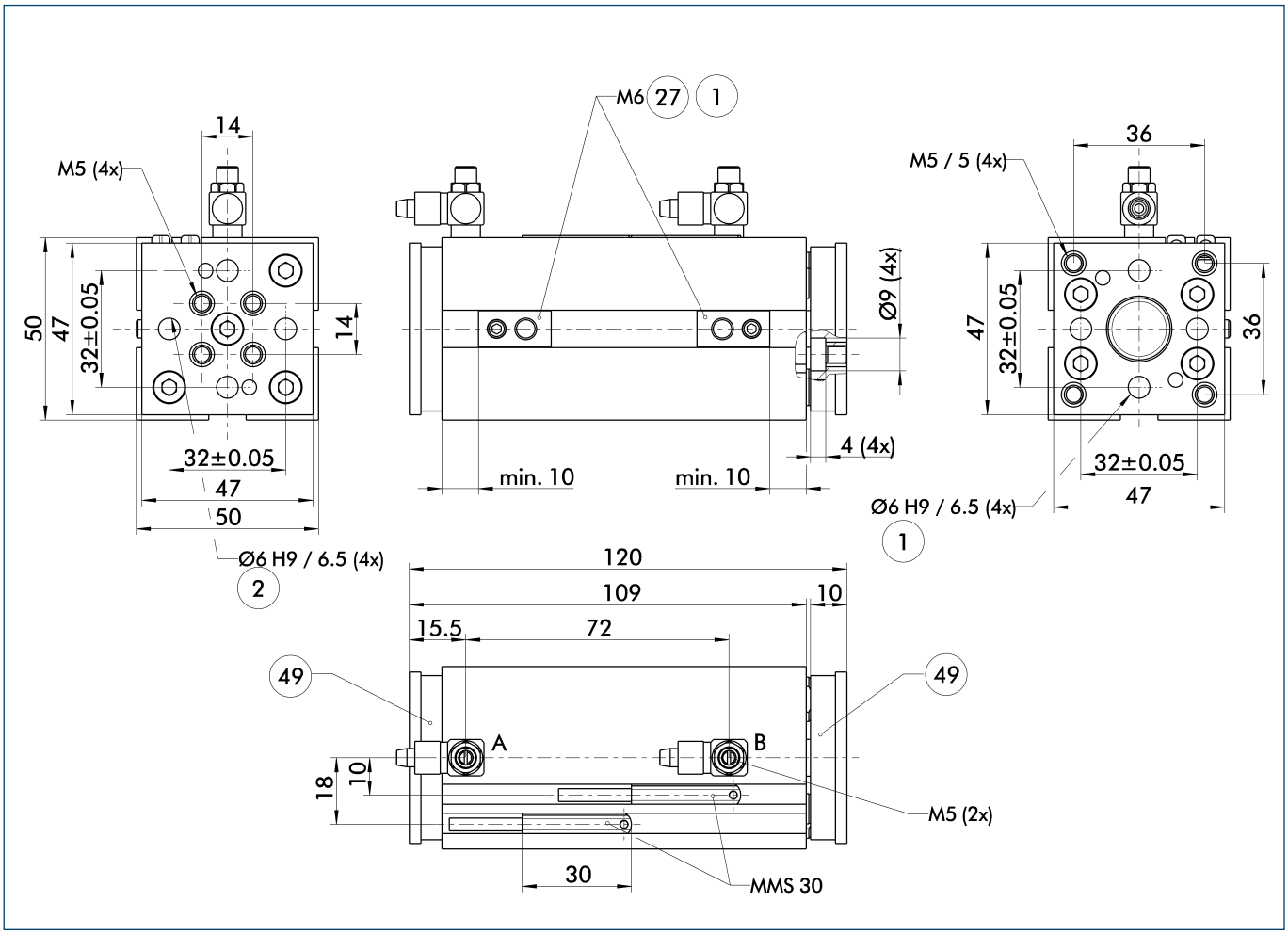


The drawing shows the unit in the basic version, the dimensions do not include the option described below.

ⓘ The SDV-P pressure maintenance valve can be used to hold the position upon a loss of pressure (see "Accessories" catalog section).

A,a Main/direct connection, extend advance linear unit
B,b Main/direct connection, return retract linear unit
① Linear unit connection
② Attachment connection
㉗ Fastening groove for T-nuts
㊾ Undercut for snap-on connection

## KONEX V 50 connecting element

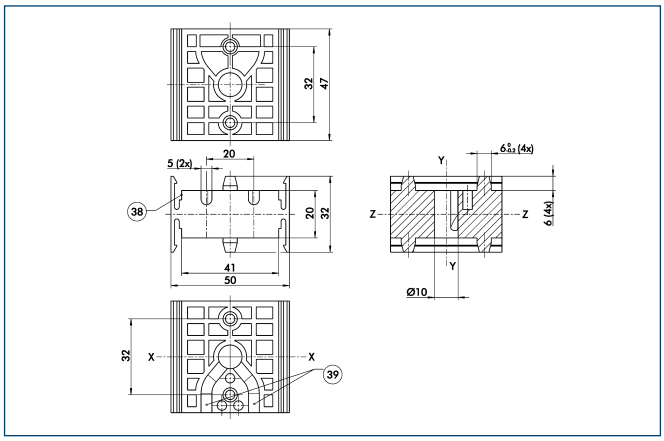


㊳ Slot for disassembly tool
㊴ Slot for air hose Ø4

Connecting element between linear unit and rotary unit

## Adapter plate

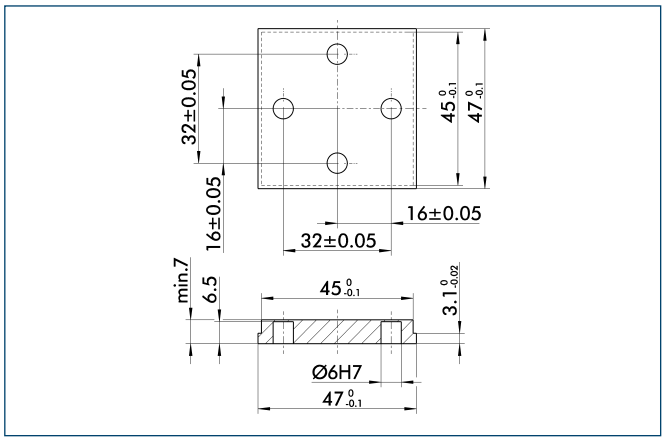


For connecting any modules you require to the linear unit or rotary unit with the V 50 connecting element

## KONEX V 55 connecting element

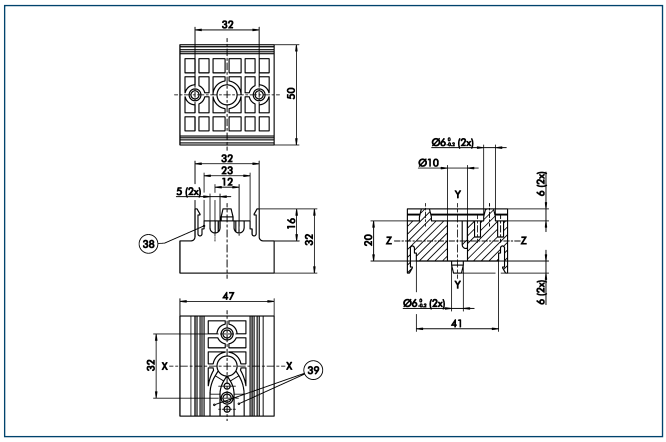


38 Slot for disassembly tool
39 Slot for air hose Ø4

Connecting element between gripper and linear unit or rotary unit

## Adapter plate

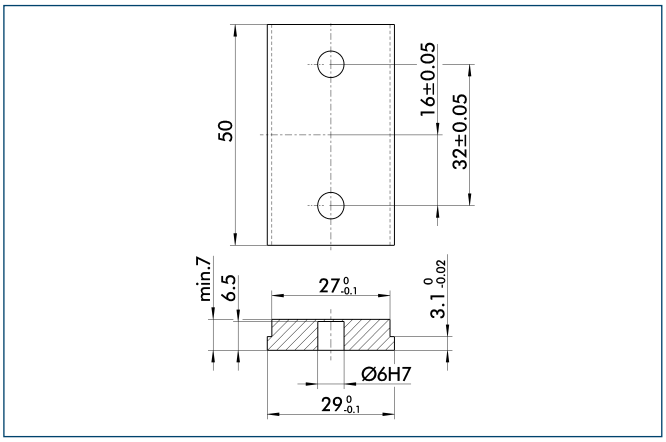


For connecting any modules you require to the linear unit or rotary unit with the V 55 connecting element

## Bending moment

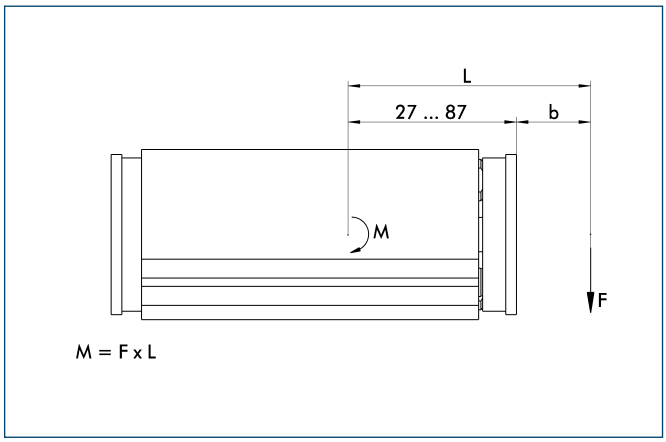


The drawing shows the center of rotation on which the leverage is based for the purpose of the bending moment calculation.

You can find more detailed information and individual parts of the above-mentioned accessories in the "Accessories" catalog section.

## Sensor system

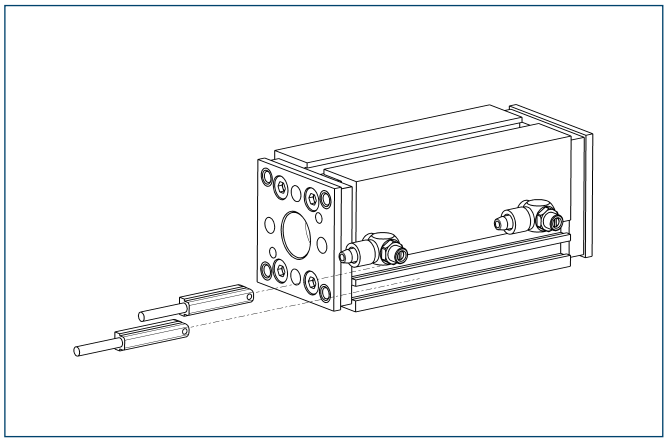

End position monitoring:
Electronic magnetic switches, for direct mounting

| Description | ID | Recommended product |
|---|---|---|
| MMS 30-S-M12-PNP | 0301571 | |
| MMS 30-S-M8-PNP | 0301471 | • |
| MMSK 30-S-PNP | 0301563 | |

ⓘ Two sensors (NO contacts) are required for each unit.

Extension cables for proximity switches/magnetic switches

| Description | ID |
|---|---|
| KA BG08-L 3P-0300-PNP | 0301622 |
| KA BW08-L 3P-0300-PNP | 0301594 |
| KA BW08-L 3P-0500-PNP | 0301502 |
| KV BW08-SG08 3P-0030-PNP | 0301495 |
| KV BW08-SG08 3P-0100-PNP | 0301496 |
| KV BW08-SG08 3P-0200-PNP | 0301497 |
| KV BW12-SG12 3P-0030-PNP | 0301595 |
| KV BW12-SG12 3P-0100-PNP | 0301596 |
| KV BW12-SG12 3P-0200-PNP | 0301597 |

ⓘ Please note the minimum permitted bending radii for the sensor cables, which are generally 35 mm.

You can find more detailed information and individual parts of the above-mentioned accessories in the “Accessories” catalog section.

# Pneumatic Gripper-Swivel System



GRIPPER-SWIVEL SYSTEM


| Series | Size | Page |
|---|---|---|
| GSM | | 1114 |
| **Parallel Gripper** | | |
| GSM-P | | 1116 |
| GSM-P | 32 | 1120 |
| GSM-P | 40 | 1124 |
| GSM-P | 50 | 1128 |
| GSM-P | 64 | 1132 |
| **Centric Gripper** | | |
| GSM-Z | | 1136 |
| GSM-Z | 30 | 1140 |
| GSM-Z | 38 | 1144 |
| GSM-Z | 45 | 1148 |
| **Angular Gripper** | | |
| GSM-W | | 1152 |
| GSM-W | 16 | 1156 |
| GSM-W | 20 | 1160 |
| GSM-W | 25 | 1164 |
| GSM-W | 32 | 1168 |
| GSM-W | 40 | 1172 |
| **Radial Gripper** | | |
| GSM-R | | 1176 |
| GSM-R | 16 | 1180 |
| GSM-R | 20 | 1184 |
| GSM-R | 25 | 1188 |
| GSM-R | 32 | 1192 |
| GSM-R | 40 | 1196 |

## Modular Design

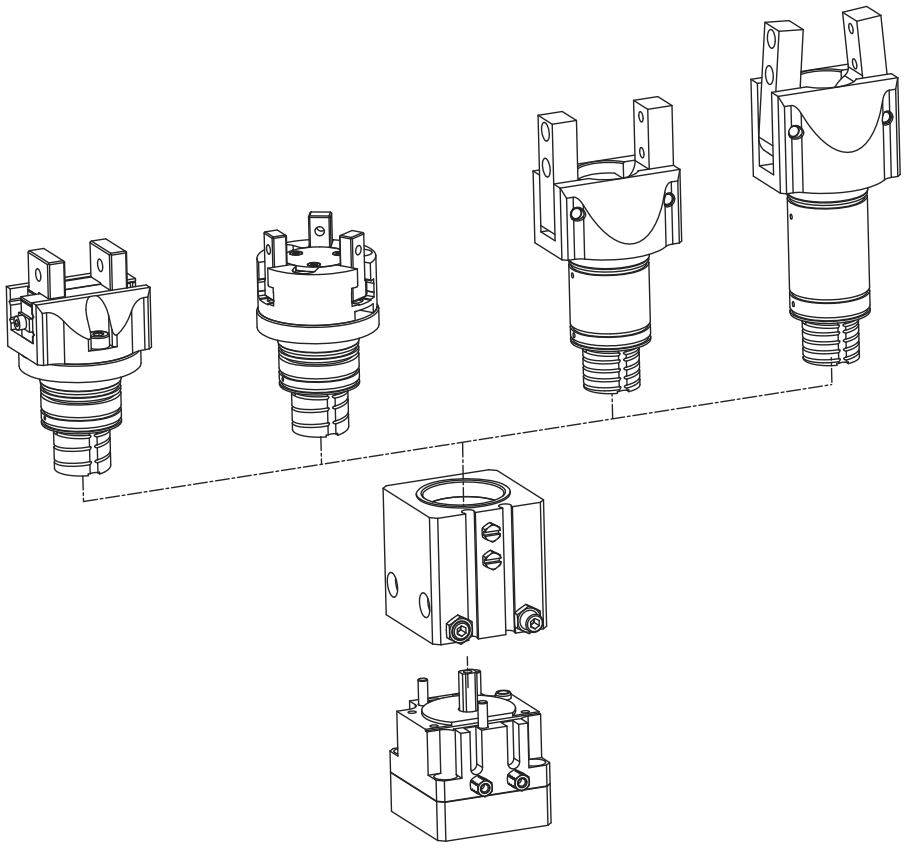

## Versions of the series

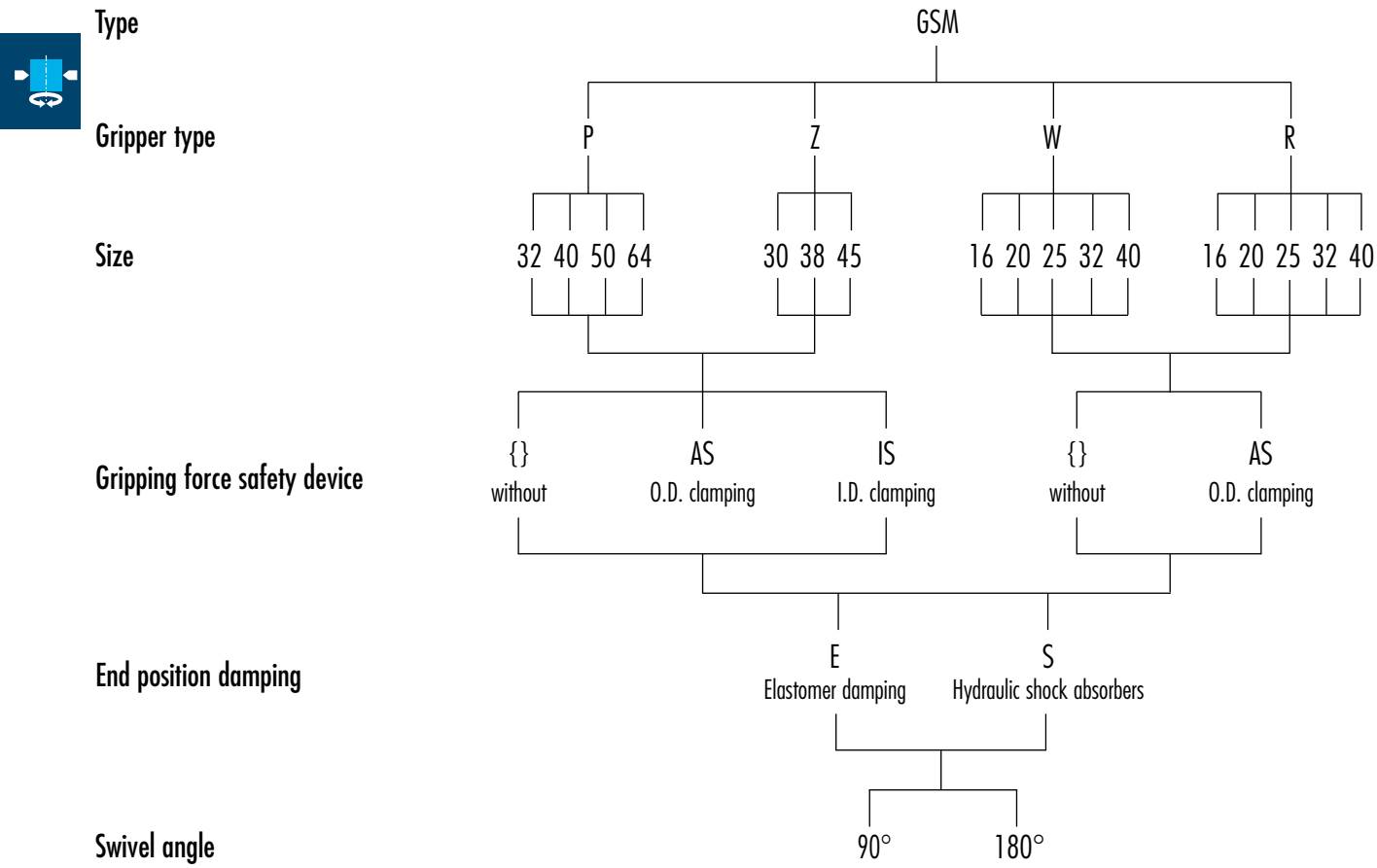

## How to order

GSM – P – 20 – AS – E – 090

- 090: 90° / 180° — Swivel angle
- E: E = with Elastomer damping; S = with Hydraulic shock absorbers — End position damping
- AS: without / O.D. clamping / I.D. clamping — Gripping force safety device
- 20: 16 / 20 / 25 / 30 / 32 / 38 /40 / 45 / 50 / 64 — Size
- P: P = Parallel gripper; Z = Centric gripper; W = Angular gripper; R = Radial gripper — Gripper type
- GSM: Rotary Gripper Module — Type

## End stop adjustability and switching angle of sensor

- in the case of 90° units

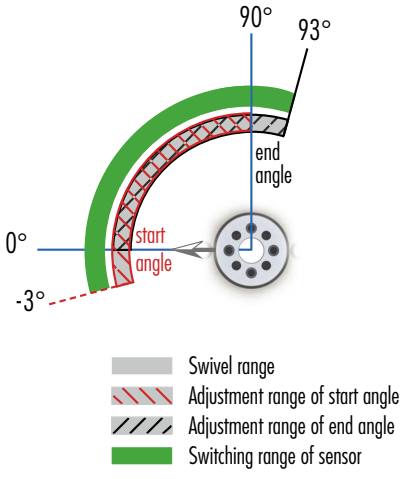


- in the case of 180° units

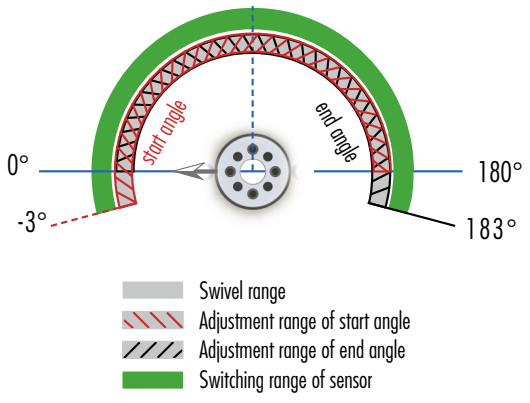

# GSM-P





**Sizes**
32 ... 64




**Weight**
0.37 kg ... 1.51 kg

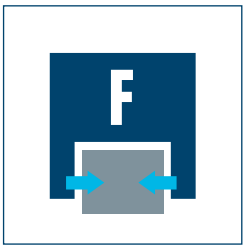


**Gripping force**
39 N ... 162 N




**Stroke per finger**
4 mm ... 10 mm

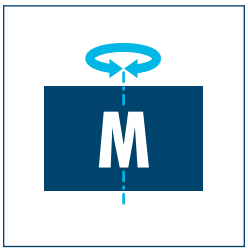


**Torque**
0.3 Nm ... 2.9 Nm

## Application example

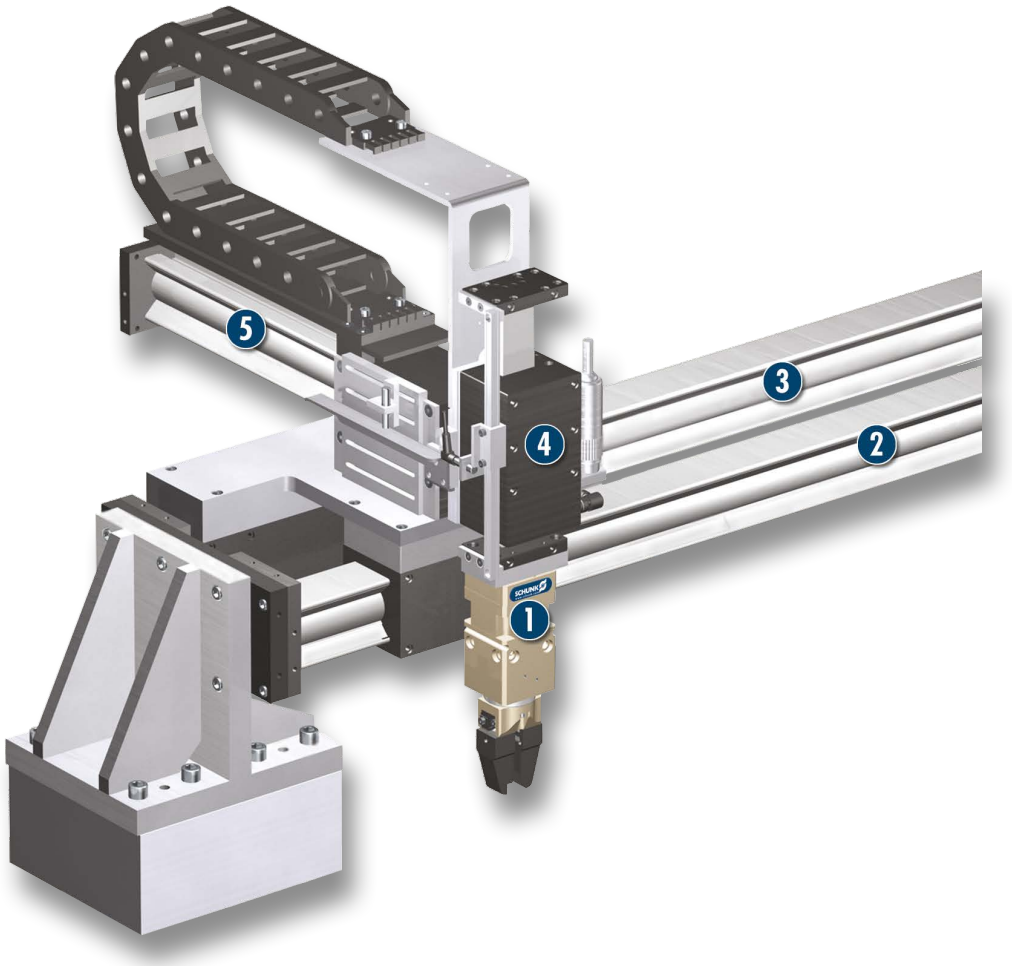


The three-axis boom (X-Y-Z) with rotary gripping combination is employed to insert various products individually in outer packaging whilst rotating them if necessary.

1. GSM-P Gripper Swivel Module
2. MLD Linear Motor Drive
3. Support axis without drive
4. Short-stroke Axis with direct drive MLD Stroke with reference switch
5. Linear axis with direct drive MLD with measuring system

## Parallel Gripper Swivel Module

compact rotary gripping combination, consisting of a powerful rotor drive, an end-position and damping device and a 2-finger parallel gripper

## Field of application

gripping and rotating combined in a single compact module, for automated assembly in places with a restricted amount of available space

## Your advantages and benefits

**Space-saving**
as the rotary drive, end-position damping unit and gripper are merged in one compact module

**Economical**
since adapter plates are not needed, there will be costs for project planning and engineering design

**Powerful**
thanks to optional hydraulic damping

**Flexible**
through several mounting options, infinitely adjustable rotating angle and numerous product versions

**Roller guide**
for precise gripping through base jaw guidance with minimum play

**Process reliability**
as moving cables and hoses are replaced by integrated feed-throughs

**Mounting from three sides in three screw directions possible**
for universal and flexible assembly of the rotary gripper module

**Air supply via hose-free direct connection or screw connections**
for the connection of exactly the right rotary gripper module in all automation solutions

**Comprehensive accessories**
through the use of existing gripper components




## General note to the series

**Principle of function**
Combined rotor and piston drive

**Housing material**
Aluminum alloy, hard-anodized

**Base jaw material**
Steel

**Actuation**
pneumatic, with filtered compressed air (10 microns): dry, lubricated or non-lubricated
Pressure medium: Required quality class of compressed air according to DIN ISO 8573-1: 6 4 4

**Warranty**
24 months (details, general terms and conditions and operation manuals can be downloaded under www.schunk.com)

**Scope of delivery**
Centering sleeves, O-rings for direct connection, screws for lateral fastening, steel balls for adjustment of the swiveling angle, assembly and operation manual with declaration of incorporation

**Gripping force maintenance device**
possible with SDV-P pressure maintenance valve

## Sectional diagram

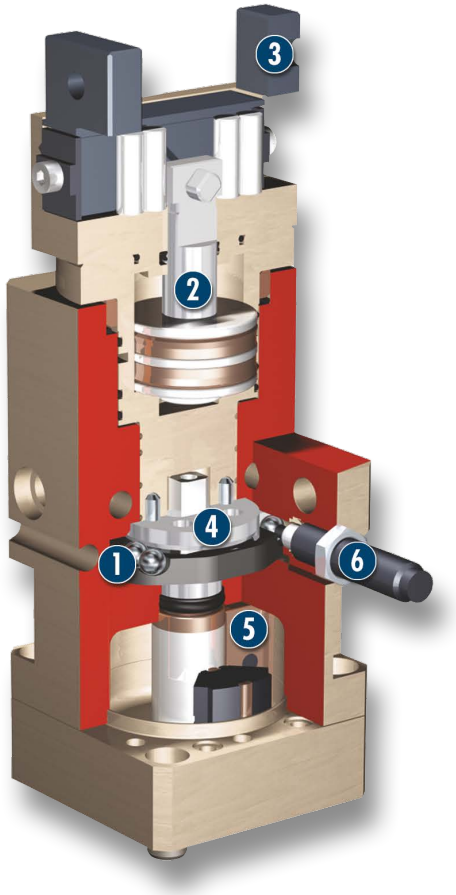


**1 Preset of rotating angle**
using steel balls for any desired angle of rotation

**2 Gripper drive**
double-acting piston drive system with wedge hook

**3 Base jaw**
for the connection of workpiece-specific gripper fingers

**4 End-position damping assembly**
for end-position adjustment and damping

**5 Rotor**
as a compact, powerful drive

**6 Hydraulic shock absorber**
to increase the damping performance

## Functional description

As its rotor is actuated with pressure, the drive rotates the integrated gripping module. The module itself is driven by its own piston. The piston motion is subsequently transformed into a synchronized gripping motion.

## Options and special information

Despite the many options and versions already available as standard, SCHUNK also designs and produces customized versions on request.

## Accessories

Accessories from SCHUNK – the suitable supplement for maximum functionality, reliability and performance of all automation modules.

### Centering sleeves



### Fittings



### Programmable magnetic switch



### Inductive proximity switches



### Plastic inserts






### Sensor cables



### Gripper pads

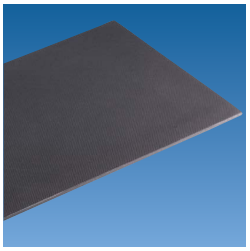

### Sensor Distributor

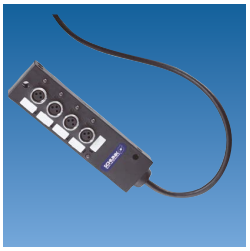

### Pressure maintenance valve



### Finger blanks



ⓘ For the exact size of the required accessories, availability of this size and the designation and ID, please refer to the additional views at the end of the size in question. You will find more detailed information on our accessory range in the “Accessories” catalog section.

## General note to the series

### Gripping force

is the arithmetic total of the gripping force applied to each finger at distance P (see illustration) measured from the upper edge of the gripper.

### Finger length

The finger length is measured from the upper edge of the gripper housing in the direction of the main axis.

### Workpiece weight

The recommended workpiece weight is calculated for a force-type connection with a coefficient of friction of 0.1 and a safety factor of 2 against slippage of the workpiece on acceleration due to gravity g. Considerably heavier workpiece weights are permitted with form-fit gripping.

### Repeat accuracy

is defined as the spread of the limit position after 100 consecutive strokes.

### Closing and opening times, cycle times

Closing and opening times are purely the times that the base jaws or fingers are in motion. Cycle times are purely the times that the rotating part (mostly the pinion) is in motion. Valve switching times, hose filling times or PLC reaction times are not included in the above times and must be taken into consideration when determining cycle times.

### Middle attached load

The middle attached load should constitute a typical load. It is defined as the half of the max. possible mass moment of inertia that can be swiveled without restriction, bouncing or hitting, with a centric load and a vertical rotating axis.

# GSM-P 32

**Pneumatic • Gripper-Swivel System • Parallel Gripper Swivel Module**



## Gripping force, I.D. gripping

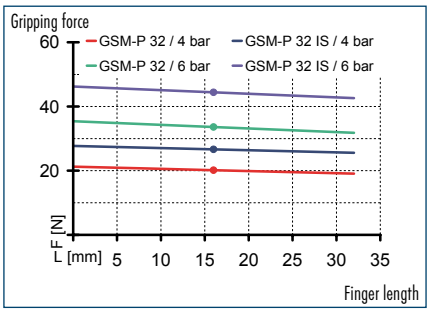


## Gripping force, O.D. gripping

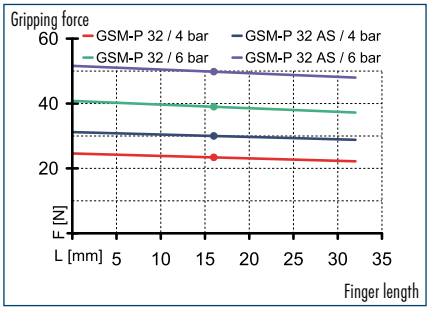


## Finger load

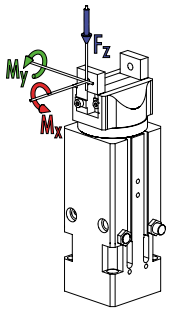


$M_x$ max. 1.50 Nm
$M_y$ max. 1.00 Nm
$F_z$ max. 105.0 N

ⓘ The indicated moments and forces are static values, apply per base jaw and may occur simultaneously. $M_y$ may arise in addition to the moment generated by the gripping force itself. If the max. permitted finger weight is exceeded, it is imperative to throttle the air pressure so that the jaw movement occurs without any hitting or bouncing. Service life may be reduced.

## Technical data

| Description | | GSM-P 32-E-090 | GSM-P 32-S-090 | GSM-P 32-AS-E-090 | GSM-P 32-AS-S-090 | GSM-P 32-IS-E-090 | GSM-P 32-IS-S-090 |
|---|---|---|---|---|---|---|---|
| **ID** | | **0304630** | **0304730** | **0304631** | **0304731** | **0304632** | **0304732** |
| End position adjustability | [°] | 90 | 90 | 90 | 90 | 90 | 90 |
| Stroke per finger | [mm] | 4 | 4 | 4 | 4 | 4 | 4 |
| Closing/Opening force | [N] | 39/33 | 39/33 | 51/- | 51/- | -/48 | -/48 |
| Min. spring force | [N] | | | 12 | 12 | 15 | 15 |
| Torque | [Nm] | 0.35 | 0.35 | 0.35 | 0.35 | 0.35 | 0.35 |
| Damping for rotation | | Elastomer damping | hydr. shock absorbers | Elastomer damping | hydr. shock absorbers | Elastomer damping | hydr. shock absorbers |
| Recommended workpiece weight | [kg] | 0.2 | 0.2 | 0.2 | 0.2 | 0.2 | 0.2 |
| Air consumption for gripping | [cm³] | 4 | 4 | 4 | 4 | 4 | 4 |
| Air consumption for swiveling | [cm³] | 9 | 9 | 9 | 9 | 9 | 9 |
| Weight | [kg] | 0.37 | 0.37 | 0.42 | 0.42 | 0.42 | 0.42 |
| Nominal operating pressure | [bar] | 6 | 6 | 6 | 6 | 6 | 6 |
| Max. operating pressure | [bar] | 6.5 | 6.5 | 6.5 | 6.5 | 6.5 | 6.5 |
| Minimum operating pressure for gripping | [bar] | 2 | 2 | 4 | 4 | 4 | 4 |
| Minimum operating pressure for swiveling | [bar] | 3.5 | 3.5 | 3.5 | 3.5 | 3.5 | 3.5 |
| Closing/opening time | [s] | 0.04/0.04 | 0.04/0.04 | 0.03/0.04 | 0.03/0.04 | 0.04/0.03 | 0.04/0.03 |
| Swiveling time with middle attached load | [s] | 0.06 | 0.12 | 0.12 | 0.12 | 0.12 | 0.12 |
| Max. permitted finger length | [mm] | 32 | 32 | 32 | 32 | 32 | 32 |
| Max. permitted weight per finger | [kg] | 0.04 | 0.04 | 0.04 | 0.04 | 0.04 | 0.04 |
| IP class | | 30 | 30 | 30 | 30 | 30 | 30 |
| Min./max. ambient temperature | [°C] | -10/90 | 5/60 | -10/90 | 5/60 | -10/90 | 5/60 |
| Repeat accuracy for gripping | [mm] | 0.02 | 0.02 | 0.02 | 0.02 | 0.02 | 0.02 |
| Repeat accuracy for swiveling | [°] | 0.1 | 0.1 | 0.1 | 0.1 | 0.1 | 0.1 |

### OPTIONS and their characteristics

| Description | | GSM-P 32-E-180 | GSM-P 32-S-180 | GSM-P 32-AS-E-180 | GSM-P 32-AS-S-180 | GSM-P 32-IS-E-180 | GSM-P 32-IS-S-180 |
|---|---|---|---|---|---|---|---|
| ID | | **0303830** | **0303930** | **0303831** | **0303931** | **0303832** | **0303932** |
| End position adjustability | [°] | 180 | 180 | 180 | 180 | 180 | 180 |
| Air consumption for swiveling | [cm³] | 15 | 15 | 15 | 15 | 15 | 15 |
| Swiveling time with middle attached load | [s] | 0.18 | 0.18 | 0.18 | 0.18 | 0.18 | 0.18 |

## Main view

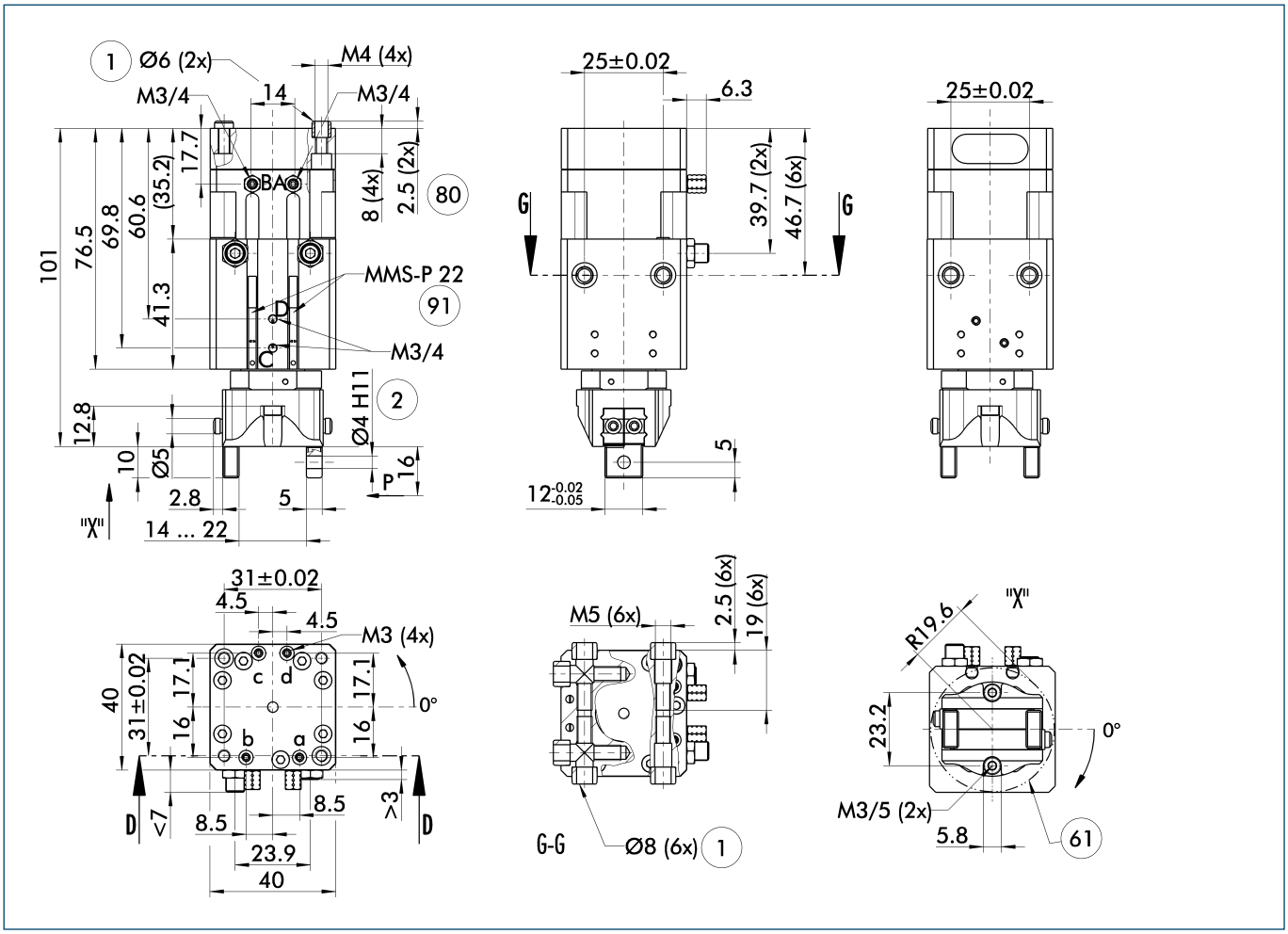


The drawing shows the gripper in the basic version with opened jaws without considering the dimensions of the described options below.

ⓘ The SDV-P pressure maintenance valve can also be used for I.D. or O.D. gripping alternatively or in addition to the spring-loaded, mechanical gripping force maintenance device (see "Accessories" catalog section).

A, a Main/direct connection, rotary actuator clockwise turning
B, b Main/direct connection, rotary actuator anti-clockwise turning
C, c Main/direct connection, gripper opening
D, d Main/direct connection, gripper closing

(1) Gripper connection
(2) Finger connection
(61) Interfering contour during swiveling
(80) Depth of the centering sleeve hole in the matching part
(91) Monitoring of gripping and swiveling

## Hose-free direct connection

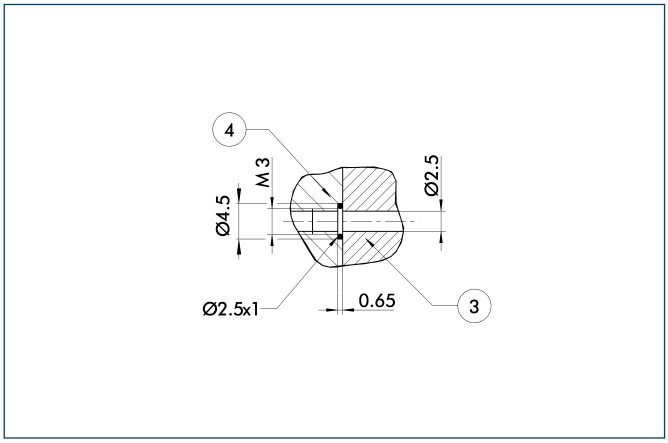


(3) Adapter
(4) Gripper swivel module

The direct connection is used for supplying compressed air without hoses. Instead, the pressure medium is fed through bore-holes in the mounting plate.

## AS/IS gripping force maintenance device

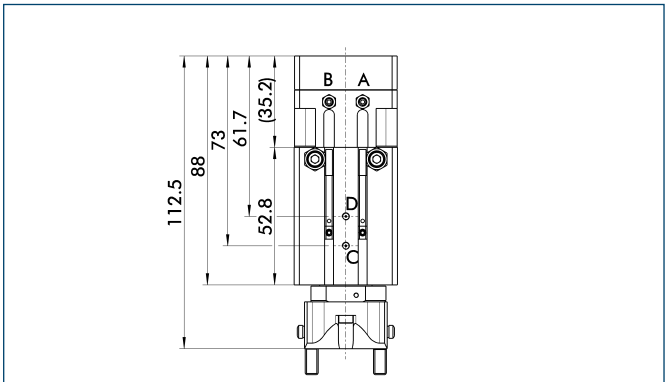


The mechanical gripping force maintenance device ensures a minimum gripping force even in case of pressure drop. This acts as closing force in the AS version, and as opening force in the IS version. In addition, the gripping force maintenance device can also be used for increasing the gripping force or for single-acting gripping.

## Version with shock absorbers

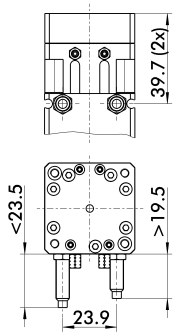


The drawing shows changes in dimensions of the shock absorber versions, compared to the elastomer versions shown on the main view.

## Stacked arrangement

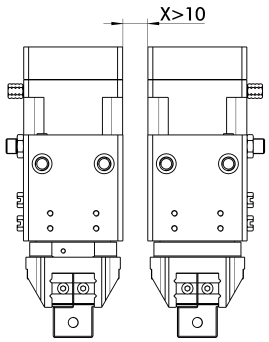


CAUTION: Monitoring is carried out by magnetic switches, and in case of side-by-side assembly of several units, a minimum distance of X mm between the units must be maintained.

## Finger blanks

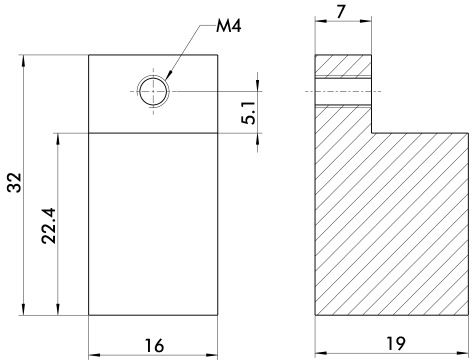


Finger blanks for customized subsequent machining

| Description | ID | Material | Scope of delivery |
|---|---|---|---|
| Finger blanks | | | |
| ABR 32 | **0340212** | Aluminum | 2 |

## Programmable magnetic switch

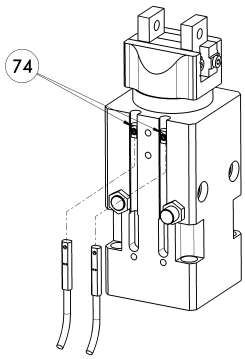


74 Stop for MMS-P

Position monitoring with two programmable positions per sensor. The end position monitoring is mounted in the C-slot.

| Description | ID | Recommended product |
|---|---|---|
| Programmable magnetic switch | | |
| MMS-P 22-S-M8-PNP | **0301370** | • |
| MMSK-P 22-S-PNP | **0301371** | |
| Connection cables | | |
| KA BG08-L 4P-0500 | **0307767** | |
| KA BG08-L 4P-1000 | **0307768** | |
| KA BW08-L 4P-0500 | **0307765** | |
| KA BW08-L 4P-1000 | **0307766** | |
| Sensor Distributor | | |
| V2-M8-4P-2XM8-3P | **0301380** | |

ⓘ Please note the minimum permitted bending radii for the sensor cables, which are generally 35 mm.

ⓘ Per each GSM two sensors MMS-P are required. If standard extension cables (M8-3P) are used, the sensor distributor can be applied.


You can find more detailed information and individual parts of the above-mentioned accessories in the “Accessories” catalog section.

## Mounting kit for proximity switches – angle of rotation 90°

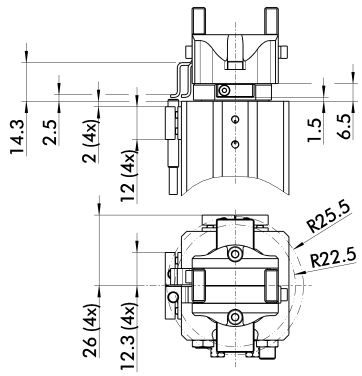


The mounting kits for the 90° and 180° GSM versions are identical, only the mounting is different. The mounting kit consists of two switch cams, two operating cams and small components. The proximity switches must be ordered separately.

| Description | ID |
|---|---|
| Mounting kit for proximity switch | |
| AS-GSM-P 32 | **0304934** |

ⓘ This mounting kit needs to be ordered optionally as an accessory.

## Mounting kit for proximity switches – angle of rotation 180°

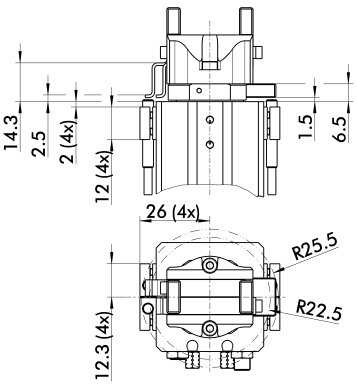


The mounting kits for the 90° and 180° GSM versions are identical, only the mounting is different. The mounting kit consists of two switch cams, two operating cams (only one needs to be fitted, see operating manual), four sensor brackets and small components. The proximity switches must be ordered separately.

| Description | ID |
|---|---|
| Mounting kit for proximity switch | |
| AS-GSM-P 32 | **0304934** |

ⓘ This mounting kit needs to be ordered optionally as an accessory.

## Inductive proximity switches

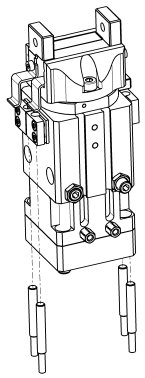

End position monitoring mounted with mounting kit

| Description | ID | Recommended product |
|---|---|---|
| Mounting kit for proximity switch | | |
| AS-GSM-P 32 | **0304934** | |
| Inductive proximity switches | | |
| IN 40-S-M8 | **0301474** | • |
| IN 40-S-M12 | **0301574** | |
| INK 40-S | **0301555** | |

ⓘ Per each GSM four sensors (closer/NO) are required, optionally also an extension cable. The conditions of the swivelling or gripping processes are evaluated of the control unit by logic evaluation of the four sensor signals. If inductive proximity switches should be used, please take care that the switching positions cannot be adjusted.

ⓘ This mounting kit needs to be ordered optionally as an accessory.

ⓘ Please note the minimum permitted bending radii for the sensor cables, which are generally 35 mm.

You can find more detailed information and individual parts of the above-mentioned accessories in the “Accessories” catalog section.

# GSM-P 40

**Pneumatic • Gripper-Swivel System • Parallel Gripper Swivel Module**



## Gripping force, I.D. gripping

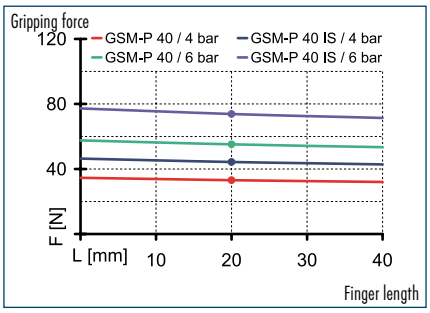


## Gripping force, O.D. gripping

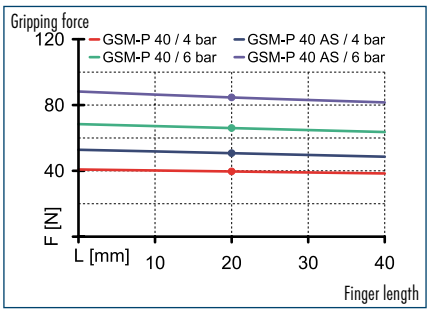


## Finger load

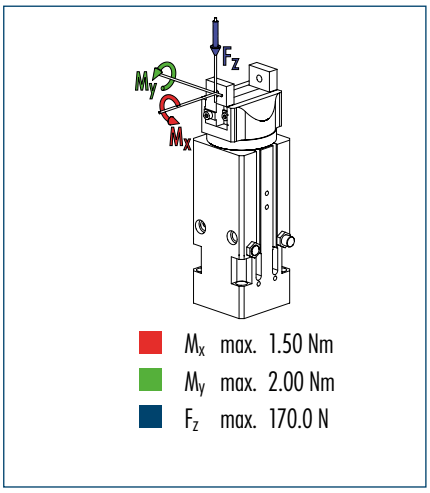


ⓘ The indicated moments and forces are static values, apply per base jaw and may occur simultaneously. $M_y$ may arise in addition to the moment generated by the gripping force itself. If the max. permitted finger weight is exceeded, it is imperative to throttle the air pressure so that the jaw movement occurs without any hitting or bouncing. Service life may be reduced.

## Technical data

| Description | | GSM-P 40-E-090 | GSM-P 40-S-090 | GSM-P 40-AS-E-090 | GSM-P 40-AS-S-090 | GSM-P 40-IS-E-090 | GSM-P 40-IS-S-090 |
|---|---|---|---|---|---|---|---|
| **ID** | | **0304640** | **0304740** | **0304641** | **0304741** | **0304642** | **0304742** |
| End position adjustability | [°] | 90 | 90 | 90 | 90 | 90 | 90 |
| Stroke per finger | [mm] | 6 | 6 | 6 | 6 | 6 | 6 |
| Closing/Opening force | [N] | 66/54 | 66/54 | 87/- | 87/- | -/69 | -/69 |
| Min. spring force | [N] | | | 21 | 21 | 15 | 15 |
| Torque | [Nm] | 0.3 | 0.3 | 0.3 | 0.3 | 0.3 | 0.3 |
| Damping for rotation | | Elastomer damping | hydr. shock absorbers | Elastomer damping | hydr. shock absorbers | Elastomer damping | hydr. shock absorbers |
| Recommended workpiece weight | [kg] | 0.33 | 0.33 | 0.33 | 0.33 | 0.33 | 0.33 |
| Air consumption for gripping | [cm³] | 5.97 | 5.97 | 5.97 | 5.97 | 5.97 | 5.97 |
| Air consumption for swiveling | [cm³] | 9 | 9 | 9 | 9 | 9 | 9 |
| Weight | [kg] | 0.43 | 0.43 | 0.5 | 0.5 | 0.5 | 0.5 |
| Nominal operating pressure | [bar] | 6 | 6 | 6 | 6 | 6 | 6 |
| Max. operating pressure | [bar] | 6.5 | 6.5 | 6.5 | 6.5 | 6.5 | 6.5 |
| Minimum operating pressure for gripping | [bar] | 2 | 2 | 4 | 4 | 4 | 4 |
| Minimum operating pressure for swiveling | [bar] | 4 | 4 | 4 | 4 | 4 | 4 |
| Closing/opening time | [s] | 0.05/0.05 | 0.05/0.05 | 0.03/0.05 | 0.03/0.05 | 0.05/0.03 | 0.05/0.03 |
| Swiveling time with middle attached load | [s] | 0.14 | 0.14 | 0.14 | 0.14 | 0.14 | 0.14 |
| Max. permitted finger length | [mm] | 40 | 40 | 40 | 40 | 40 | 40 |
| Max. permitted weight per finger | [kg] | 0.08 | 0.08 | 0.08 | 0.08 | 0.08 | 0.08 |
| IP class | | 30 | 30 | 30 | 30 | 30 | 30 |
| Min./max. ambient temperature | [°C] | -10/90 | 5/60 | -10/90 | 5/60 | -10/90 | 5/60 |
| Repeat accuracy for gripping | [mm] | 0.02 | 0.02 | 0.02 | 0.02 | 0.02 | 0.02 |
| Repeat accuracy for swiveling | [°] | 0.1 | 0.1 | 0.1 | 0.1 | 0.1 | 0.1 |

### OPTIONS and their characteristics

| Description | | GSM-P 40-E-180 | GSM-P 40-S-180 | GSM-P 40-AS-E-180 | GSM-P 40-AS-S-180 | GSM-P 40-IS-E-180 | GSM-P 40-IS-S-180 |
|---|---|---|---|---|---|---|---|
| ID | | **0303840** | **0303940** | **0303841** | **0303941** | **0303842** | **0303942** |
| End position adjustability | [°] | 180 | 180 | 180 | 180 | 180 | 180 |
| Air consumption for swiveling | [cm³] | 15 | 15 | 15 | 15 | 15 | 15 |
| Swiveling time with middle attached load | [s] | 0.22 | 0.22 | 0.22 | 0.22 | 0.22 | 0.22 |

## Main view

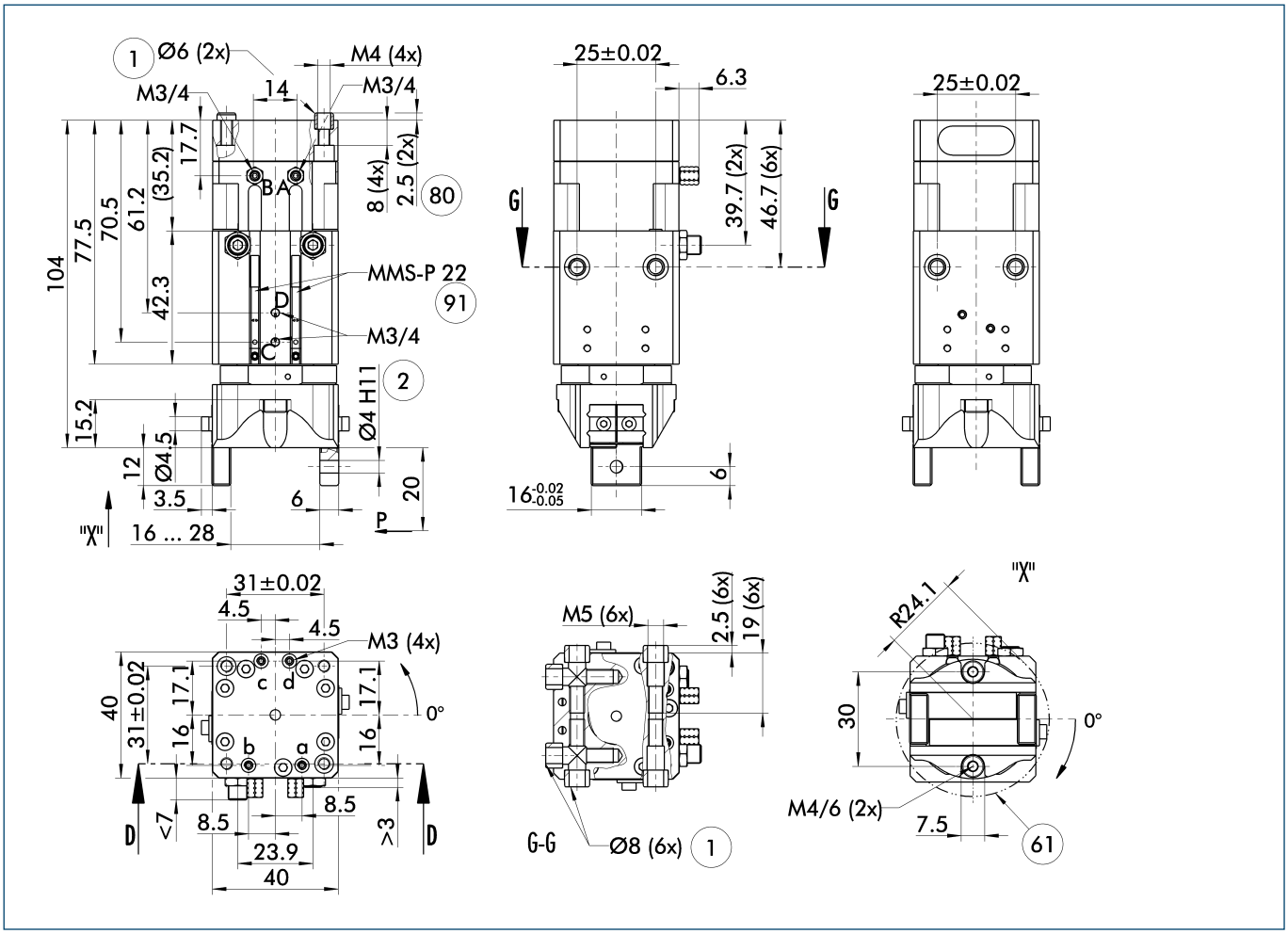


The drawing shows the gripper in the basic version with opened jaws without considering the dimensions of the described options below.

ⓘ The SDV-P pressure maintenance valve can also be used for I.D. or O.D. gripping alternatively or in addition to the spring-loaded, mechanical gripping force maintenance device (see "Accessories" catalog section).

A, a Main/direct connection, rotary actuator clockwise turning
B, b Main/direct connection, rotary actuator anti-clockwise turning
C, c Main/direct connection, gripper opening
D, d Main/direct connection, gripper closing

(1) Gripper connection
(2) Finger connection
(61) Interfering contour during swiveling
(80) Depth of the centering sleeve hole in the matching part
(91) Monitoring of gripping and swiveling

## Hose-free direct connection

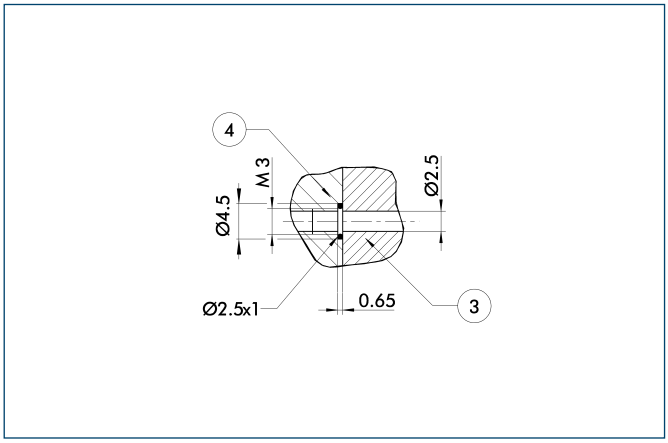


(3) Adapter
(4) Gripper swivel module

The direct connection is used for supplying compressed air without hoses. Instead, the pressure medium is fed through bore-holes in the mounting plate.

## AS/IS gripping force maintenance device

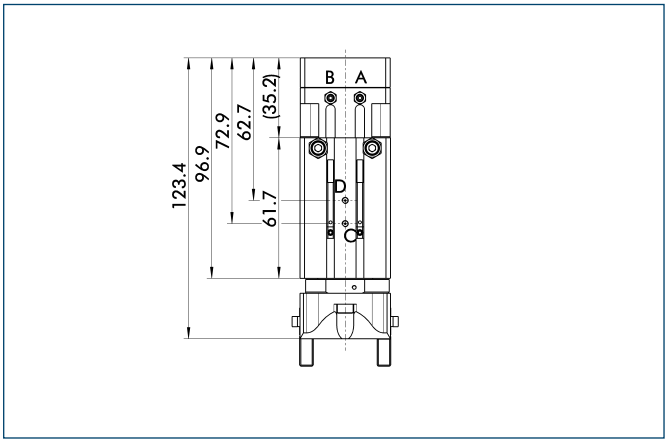


The mechanical gripping force maintenance device ensures a minimum gripping force even in case of pressure drop. This acts as closing force in the AS version, and as opening force in the IS version. In addition, the gripping force maintenance device can also be used for increasing the gripping force or for single-acting gripping.

## Version with shock absorbers

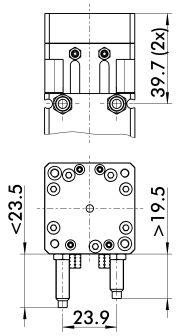


The drawing shows changes in dimensions of the shock absorber versions, compared to the elastomer versions shown on the main view.

## Stacked arrangement

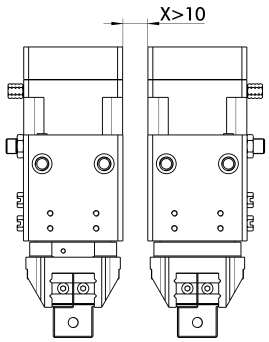


CAUTION: Monitoring is carried out by magnetic switches, and in case of side-by-side assembly of several units, a minimum distance of X mm between the units must be maintained.

## Finger blanks

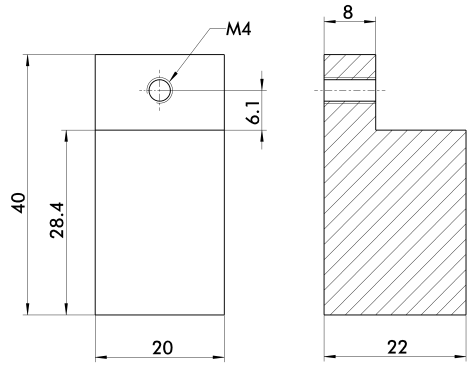


Finger blanks for customized subsequent machining

| Description | ID | Material | Scope of delivery |
|---|---|---|---|
| Finger blanks | | | |
| ABR 40 | **0340213** | Aluminum | 2 |

## Programmable magnetic switch

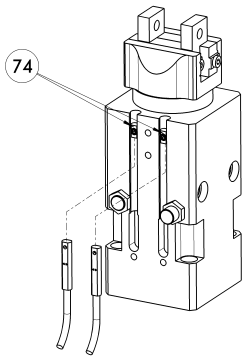


74 Stop for MMS-P

Position monitoring with two programmable positions per sensor. The end position monitoring is mounted in the C-slot.

| Description | ID | Recommended product |
|---|---|---|
| Programmable magnetic switch | | |
| MMS-P 22-S-M8-PNP | **0301370** | • |
| MMSK-P 22-S-PNP | **0301371** | |
| Connection cables | | |
| KA BG08-L 4P-0500 | **0307767** | |
| KA BG08-L 4P-1000 | **0307768** | |
| KA BW08-L 4P-0500 | **0307765** | |
| KA BW08-L 4P-1000 | **0307766** | |
| Sensor Distributor | | |
| V2-M8-4P-2XM8-3P | **0301380** | |

ⓘ Please note the minimum permitted bending radii for the sensor cables, which are generally 35 mm.

ⓘ Per each GSM two sensors MMS-P are required. If standard extension cables (M8-3P) are used, the sensor distributor can be applied.


You can find more detailed information and individual parts of the above-mentioned accessories in the “Accessories” catalog section.

## Mounting kit for proximity switches – angle of rotation 90°

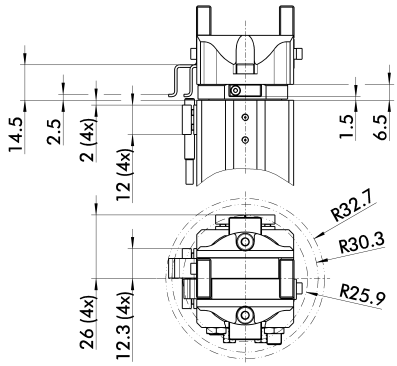


The mounting kits for the 90° and 180° GSM versions are identical, only the mounting is different. The mounting kit consists of two switch cams, two operating cams and small components. The proximity switches must be ordered separately.

| Description | ID |
|---|---|
| Mounting kit for proximity switch | |
| AS-GSM-P 40 | **0304935** |

ⓘ This mounting kit needs to be ordered optionally as an accessory.

## Mounting kit for proximity switches – angle of rotation 180°

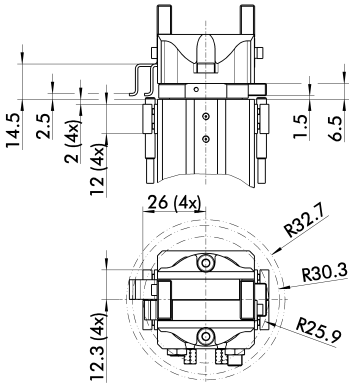


The mounting kits for the 90° and 180° GSM versions are identical, only the mounting is different. The mounting kit consists of two switch cams, two operating cams (only one needs to be fitted, see operating manual), four sensor brackets and small components. The proximity switches must be ordered separately.

| Description | ID |
|---|---|
| Mounting kit for proximity switch | |
| AS-GSM-P 40 | **0304935** |

ⓘ This mounting kit needs to be ordered optionally as an accessory.

## Inductive proximity switches

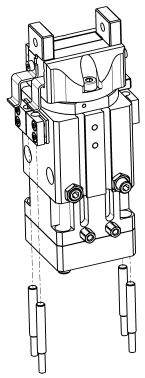

End position monitoring mounted with mounting kit

| Description | ID | Recommended product |
|---|---|---|
| Mounting kit for proximity switch | | |
| AS-GSM-P 40 | **0304935** | |
| Inductive proximity switches | | |
| IN 40-S-M8 | **0301474** | • |
| IN 40-S-M12 | **0301574** | |
| INK 40-S | **0301555** | |

ⓘ Per each GSM four sensors (closer/NO) are required, optionally also an extension cable. The conditions of the swivelling or gripping processes are evaluated of the control unit by logic evaluation of the four sensor signals. If inductive proximity switches should be used, please take care that the switching positions cannot be adjusted.

ⓘ This mounting kit needs to be ordered optionally as an accessory.

ⓘ Please note the minimum permitted bending radii for the sensor cables, which are generally 35 mm.

You can find more detailed information and individual parts of the above-mentioned accessories in the “Accessories” catalog section.

# GSM-P 50

**Pneumatic • Gripper-Swivel System • Parallel Gripper Swivel Module**



## Gripping force, I.D. gripping

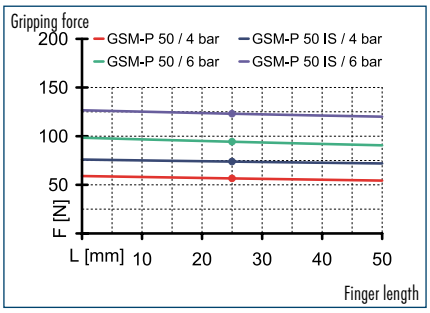


## Gripping force, O.D. gripping

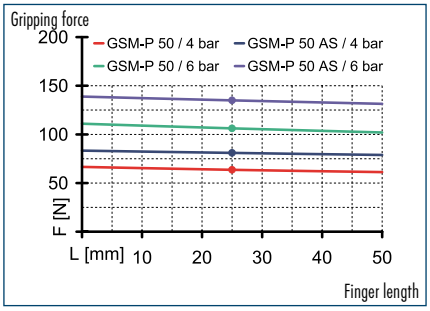


## Finger load

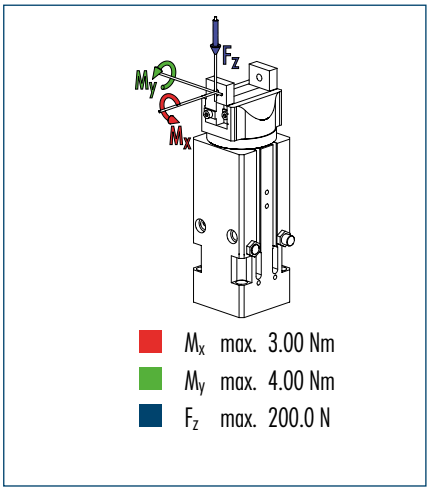


ⓘ The indicated moments and forces are static values, apply per base jaw and may occur simultaneously. $M_y$ may arise in addition to the moment generated by the gripping force itself. If the max. permitted finger weight is exceeded, it is imperative to throttle the air pressure so that the jaw movement occurs without any hitting or bouncing. Service life may be reduced.

## Technical data

| Description | | GSM-P 50-E-090 | GSM-P 50-S-090 | GSM-P 50-AS-E-090 | GSM-P 50-AS-S-090 | GSM-P 50-IS-E-090 | GSM-P 50-IS-S-090 |
|---|---|---|---|---|---|---|---|
| **ID** | | **0304650** | **0304750** | **0304651** | **0304751** | **0304652** | **0304752** |
| End position adjustability | [°] | 90 | 90 | 90 | 90 | 90 | 90 |
| Stroke per finger | [mm] | 8 | 8 | 8 | 8 | 8 | 8 |
| Closing/Opening force | [N] | 105/93 | 105/93 | 135/- | 135/- | -/114 | -/114 |
| Min. spring force | [N] | | | 30 | 30 | 21 | 21 |
| Torque | [Nm] | 2.9 | 2.9 | 2.9 | 2.9 | 2.9 | 2.9 |
| Damping for rotation | | Elastomer damping | hydr. shock absorbers | Elastomer damping | hydr. shock absorbers | Elastomer damping | hydr. shock absorbers |
| Recommended workpiece weight | [kg] | 0.52 | 0.52 | 0.52 | 0.52 | 0.52 | 0.52 |
| Air consumption for gripping | [cm³] | 10.84 | 10.84 | 10.84 | 10.84 | 10.84 | 10.84 |
| Air consumption for swiveling | [cm³] | 51 | 51 | 51 | 51 | 51 | 51 |
| Weight | [kg] | 1.19 | 1.19 | 1.19 | 1.19 | 1.2 | 1.2 |
| Nominal operating pressure | [bar] | 6 | 6 | 6 | 6 | 6 | 6 |
| Max. operating pressure | [bar] | 6.5 | 6.5 | 6.5 | 6.5 | 6.5 | 6.5 |
| Minimum operating pressure for gripping | [bar] | 2 | 2 | 4 | 4 | 4 | 4 |
| Minimum operating pressure for swiveling | [bar] | 3 | 3 | 3 | 3 | 3 | 3 |
| Closing/opening time | [s] | 0.01/0.01 | 0.01/0.01 | 0.01/0.02 | 0.01/0.02 | 0.02/0.01 | 0.02/0.01 |
| Swiveling time with middle attached load | [s] | 0.14 | 0.14 | 0.14 | 0.14 | 0.14 | 0.14 |
| Max. permitted finger length | [mm] | 50 | 50 | 50 | 50 | 50 | 50 |
| Max. permitted weight per finger | [kg] | 0.14 | 0.14 | 0.14 | 0.14 | 0.14 | 0.14 |
| IP class | | 30 | 30 | 30 | 30 | 30 | 30 |
| Min./max. ambient temperature | [°C] | -10/90 | 5/60 | -10/90 | 5/60 | -10/90 | 5/60 |
| Repeat accuracy for gripping | [mm] | 0.02 | 0.02 | 0.02 | 0.02 | 0.02 | 0.02 |
| Repeat accuracy for swiveling | [°] | 0.1 | 0.1 | 0.1 | 0.1 | 0.1 | 0.1 |

### OPTIONS and their characteristics

| Description | | GSM-P 50-E-180 | GSM-P 50-S-180 | GSM-P 50-AS-E-180 | GSM-P 50-AS-S-180 | GSM-P 50-IS-E-180 | GSM-P 50-IS-S-180 |
|---|---|---|---|---|---|---|---|
| ID | | **0303850** | **0303950** | **0303851** | **0303951** | **0303852** | **0303952** |
| End position adjustability | [°] | 180 | 180 | 180 | 180 | 180 | 180 |
| Air consumption for swiveling | [cm³] | 85 | 85 | 85 | 85 | 85 | 85 |
| Swiveling time with middle attached load | [s] | 0.24 | 0.24 | 0.24 | 0.24 | 0.24 | 0.24 |

## Main view

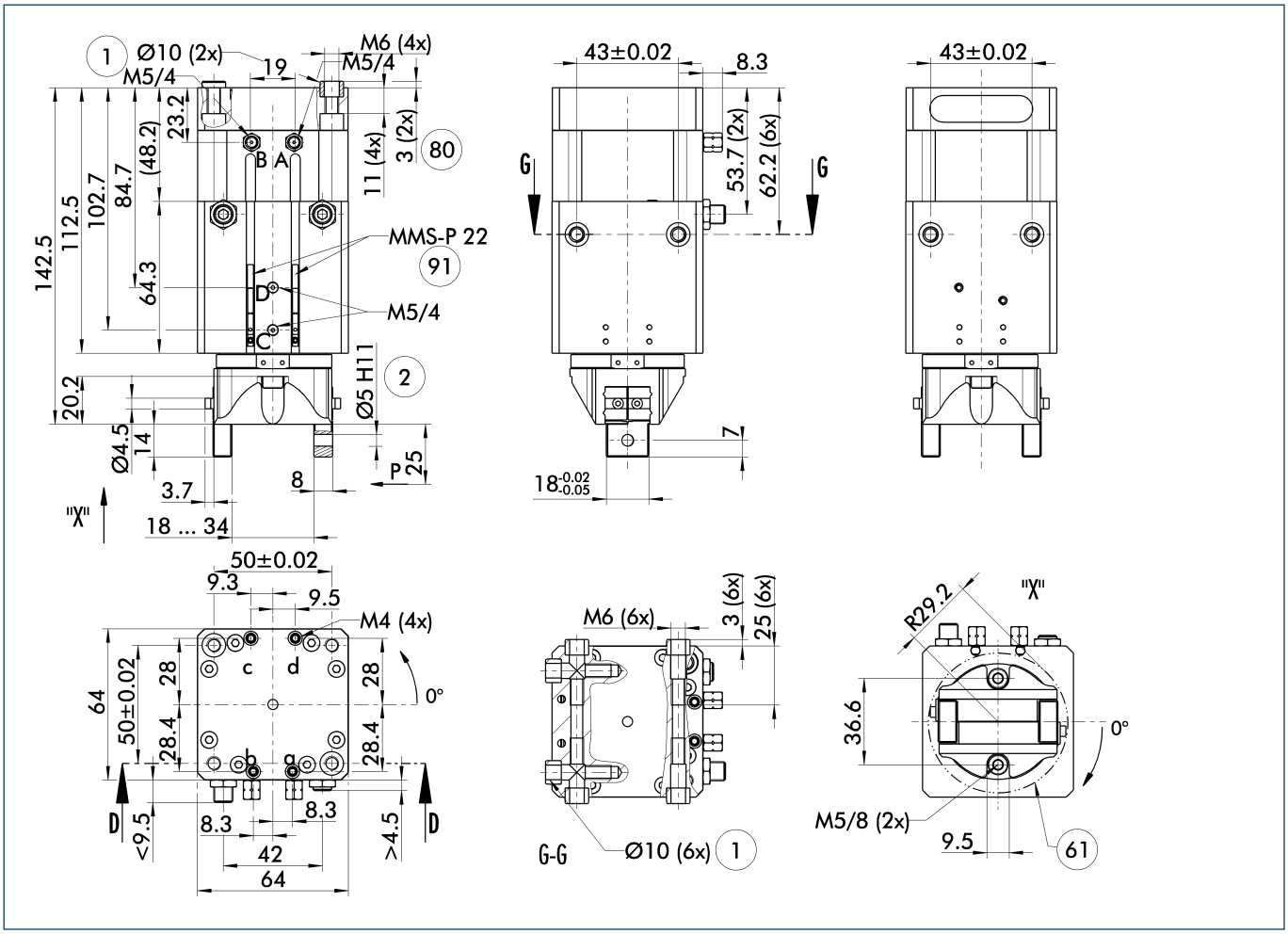


The drawing shows the gripper in the basic version with opened jaws without considering the dimensions of the described options below.

ⓘ The SDV-P pressure maintenance valve can also be used for I.D. or O.D. gripping alternatively or in addition to the spring-loaded, mechanical gripping force maintenance device (see "Accessories" catalog section).

A, a Main/direct connection, rotary actuator clockwise turning
B, b Main/direct connection, rotary actuator anti-clockwise turning
C, c Main/direct connection, gripper opening
D, d Main/direct connection, gripper closing

(1) Gripper connection
(2) Finger connection
(61) Interfering contour during swiveling
(80) Depth of the centering sleeve hole in the matching part
(91) Monitoring of gripping and swiveling

## Hose-free direct connection

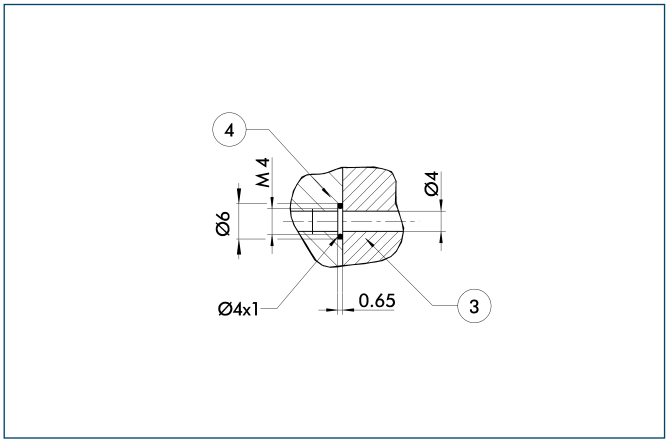


(3) Adapter
(4) Gripper swivel module

The direct connection is used for supplying compressed air without hoses. Instead, the pressure medium is fed through bore-holes in the mounting plate.

## AS/IS gripping force maintenance device

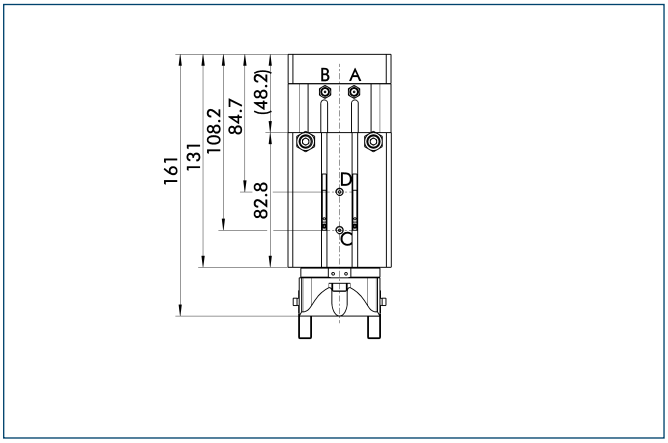


The mechanical gripping force maintenance device ensures a minimum gripping force even in case of pressure drop. This acts as closing force in the AS version, and as opening force in the IS version. In addition, the gripping force maintenance device can also be used for increasing the gripping force or for single-acting gripping.

## Version with shock absorbers

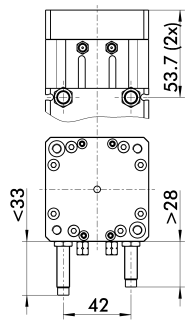


The drawing shows changes in dimensions of the shock absorber versions, compared to the elastomer versions shown on the main view.

## Stacked arrangement

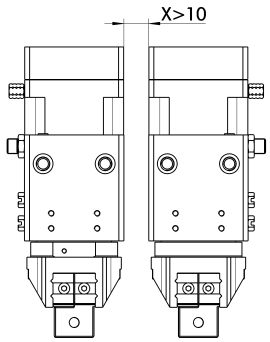


CAUTION: Monitoring is carried out by magnetic switches, and in case of side-by-side assembly of several units, a minimum distance of X mm between the units must be maintained.

## Finger blanks

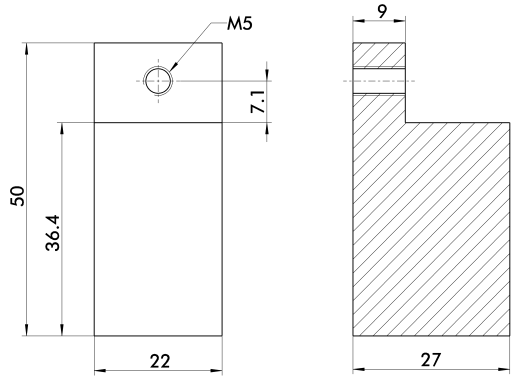


Finger blanks for customized subsequent machining

| Description | ID | Material | Scope of delivery |
|---|---|---|---|
| Finger blanks | | | |
| ABR 50 | **0340214** | Aluminum | 2 |

## Programmable magnetic switch

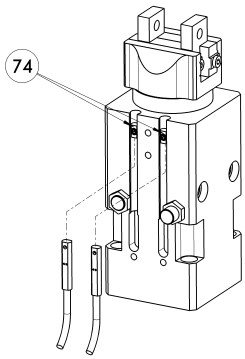


74 Stop for MMS-P

Position monitoring with two programmable positions per sensor. The end position monitoring is mounted in the C-slot.

| Description | ID | Recommended product |
|---|---|---|
| Programmable magnetic switch | | |
| MMS-P 22-S-M8-PNP | **0301370** | • |
| MMSK-P 22-S-PNP | **0301371** | |
| Connection cables | | |
| KA BG08-L 4P-0500 | **0307767** | |
| KA BG08-L 4P-1000 | **0307768** | |
| KA BW08-L 4P-0500 | **0307765** | |
| KA BW08-L 4P-1000 | **0307766** | |
| Sensor Distributor | | |
| V2-M8-4P-2XM8-3P | **0301380** | |

ⓘ Please note the minimum permitted bending radii for the sensor cables, which are generally 35 mm.

ⓘ Per each GSM two sensors MMS-P are required. If standard extension cables (M8-3P) are used, the sensor distributor can be applied.


You can find more detailed information and individual parts of the above-mentioned accessories in the “Accessories” catalog section.

## Mounting kit for proximity switches – angle of rotation 90°

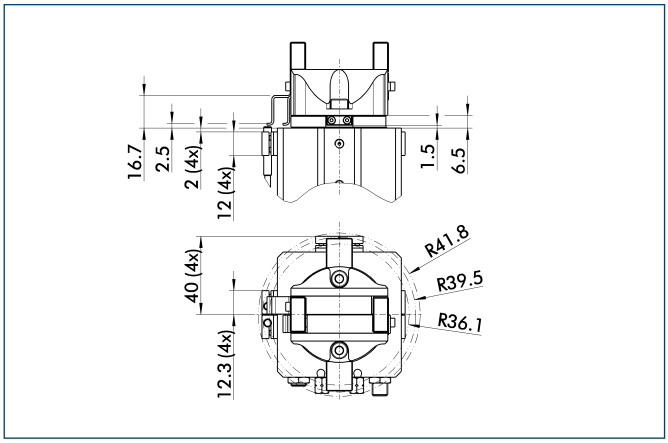


The mounting kits for the 90° and 180° GSM versions are identical, only the mounting is different. The mounting kit consists of two switch cams, two operating cams and small components. The proximity switches must be ordered separately.

| Description | ID |
|---|---|
| Mounting kit for proximity switch | |
| AS-GSM-P 50 | **0304936** |

ⓘ This mounting kit needs to be ordered optionally as an accessory.

## Mounting kit for proximity switches – angle of rotation 180°

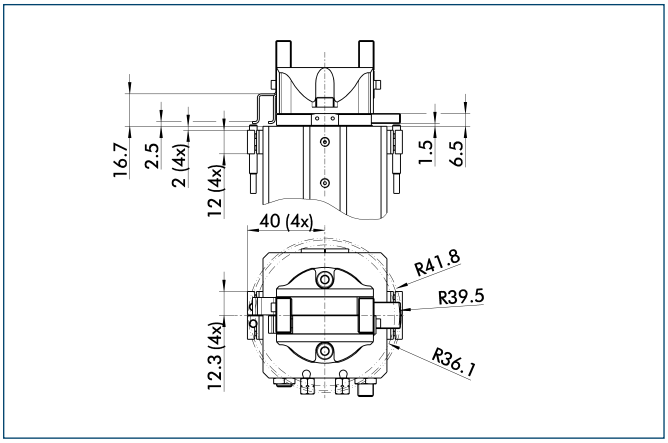


The mounting kits for the 90° and 180° GSM versions are identical, only the mounting is different. The mounting kit consists of two switch cams, two operating cams (only one needs to be fitted, see operating manual), four sensor brackets and small components. The proximity switches must be ordered separately.

| Description | ID |
|---|---|
| Mounting kit for proximity switch | |
| AS-GSM-P 50 | **0304936** |

ⓘ This mounting kit needs to be ordered optionally as an accessory.

## Inductive proximity switches

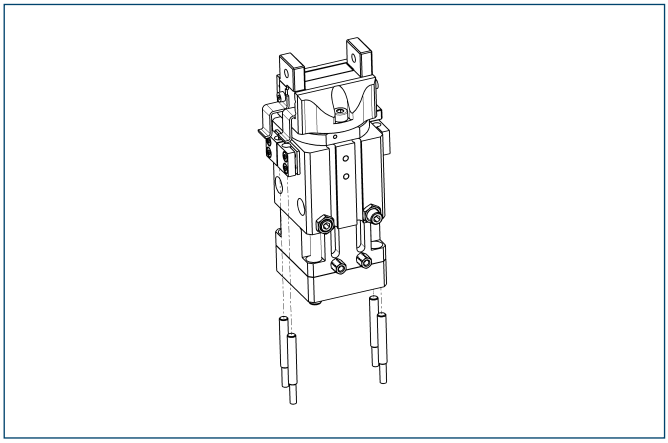

End position monitoring mounted with mounting kit

| Description | ID | Recommended product |
|---|---|---|
| Mounting kit for proximity switch | | |
| AS-GSM-P 50 | **0304936** | |
| Inductive proximity switches | | |
| IN 40-S-M8 | **0301474** | • |
| IN 40-S-M12 | **0301574** | |
| INK 40-S | **0301555** | |

ⓘ Per each GSM four sensors (closer/NO) are required, optionally also an extension cable. The conditions of the swivelling or gripping processes are evaluated of the control unit by logic evaluation of the four sensor signals. If inductive proximity switches should be used, please take care that the switching positions cannot be adjusted.

ⓘ This mounting kit needs to be ordered optionally as an accessory.

ⓘ Please note the minimum permitted bending radii for the sensor cables, which are generally 35 mm.

You can find more detailed information and individual parts of the above-mentioned accessories in the “Accessories” catalog section.

# GSM-P 64

**Pneumatic • Gripper-Swivel System • Parallel Gripper Swivel Module**



## Gripping force, I.D. gripping

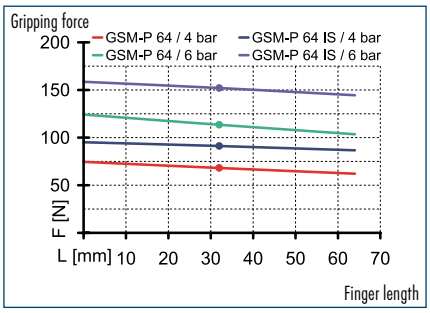


## Gripping force, O.D. gripping

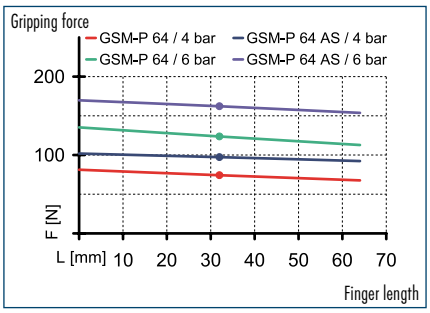


## Finger load

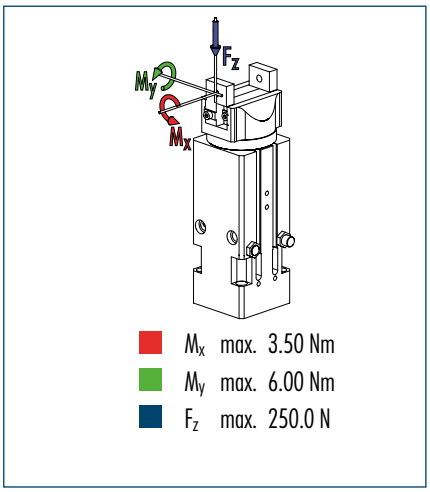


ⓘ The indicated moments and forces are static values, apply per base jaw and may occur simultaneously. $M_y$ may arise in addition to the moment generated by the gripping force itself. If the max. permitted finger weight is exceeded, it is imperative to throttle the air pressure so that the jaw movement occurs without any hitting or bouncing. Service life may be reduced.

## Technical data

| Description | | GSM-P 64-E-090 | GSM-P 64-S-090 | GSM-P 64-AS-E-090 | GSM-P 64-AS-S-090 | GSM-P 64-IS-E-090 | GSM-P 64-IS-S-090 |
|---|---|---|---|---|---|---|---|
| **ID** | | **0304660** | **0304760** | **0304661** | **0304761** | **0304662** | **0304762** |
| End position adjustability | [°] | 90 | 90 | 90 | 90 | 90 | 90 |
| Stroke per finger | [mm] | 10 | 10 | 10 | 10 | 10 | 10 |
| Closing/Opening force | [N] | 120/114 | 120/114 | 162/- | 162/- | -/147 | -/147 |
| Min. spring force | [N] | | | 42 | 42 | 33 | 33 |
| Torque | [Nm] | 2.7 | 2.7 | 2.7 | 2.7 | 2.7 | 2.7 |
| Damping for rotation | | Elastomer damping | hydr. shock absorbers | Elastomer damping | hydr. shock absorbers | Elastomer damping | hydr. shock absorbers |
| Recommended workpiece weight | [kg] | 0.61 | 0.61 | 0.61 | 0.61 | 0.61 | 0.61 |
| Air consumption for gripping | [cm³] | 15.81 | 15.81 | 15.81 | 15.81 | 15.81 | 15.81 |
| Air consumption for swiveling | [cm³] | 51 | 51 | 51 | 51 | 51 | 51 |
| Weight | [kg] | 1.39 | 1.39 | 1.51 | 1.51 | 1.51 | 1.51 |
| Nominal operating pressure | [bar] | 6 | 6 | 6 | 6 | 6 | 6 |
| Max. operating pressure | [bar] | 6.5 | 6.5 | 6.5 | 6.5 | 6.5 | 6.5 |
| Minimum operating pressure for gripping | [bar] | 2 | 2 | 4 | 4 | 4 | 4 |
| Minimum operating pressure for swiveling | [bar] | 3 | 3 | 3 | 3 | 3 | 3 |
| Closing/opening time | [s] | 0.01/0.01 | 0.01/0.01 | 0.01/0.02 | 0.01/0.02 | 0.02/0.01 | 0.02/0.01 |
| Swiveling time with middle attached load | [s] | 0.14 | 0.14 | 0.14 | 0.14 | 0.14 | 0.14 |
| Max. permitted finger length | [mm] | 64 | 64 | 64 | 64 | 64 | 64 |
| Max. permitted weight per finger | [kg] | 0.24 | 0.24 | 0.24 | 0.24 | 0.24 | 0.24 |
| IP class | | 30 | 30 | 30 | 30 | 30 | 30 |
| Min./max. ambient temperature | [°C] | -10/90 | 5/60 | -10/90 | 5/60 | -10/90 | 5/60 |
| Repeat accuracy for gripping | [mm] | 0.02 | 0.02 | 0.02 | 0.02 | 0.02 | 0.02 |
| Repeat accuracy for swiveling | [°] | 0.1 | 0.1 | 0.1 | 0.1 | 0.1 | 0.1 |

### OPTIONS and their characteristics

| Description | | GSM-P 64-E-180 | GSM-P 64-S-180 | GSM-P 64-AS-E-180 | GSM-P 64-AS-S-180 | GSM-P 64-IS-E-180 | GSM-P 64-IS-S-180 |
|---|---|---|---|---|---|---|---|
| ID | | **0303860** | **0303960** | **0303861** | **0303961** | **0303862** | **0303962** |
| End position adjustability | [°] | 180 | 180 | 180 | 180 | 180 | 180 |
| Air consumption for swiveling | [cm³] | 85 | 85 | 85 | 85 | 85 | 85 |
| Swiveling time with middle attached load | [s] | 0.24 | 0.24 | 0.24 | 0.24 | 0.24 | 0.24 |

## Main view

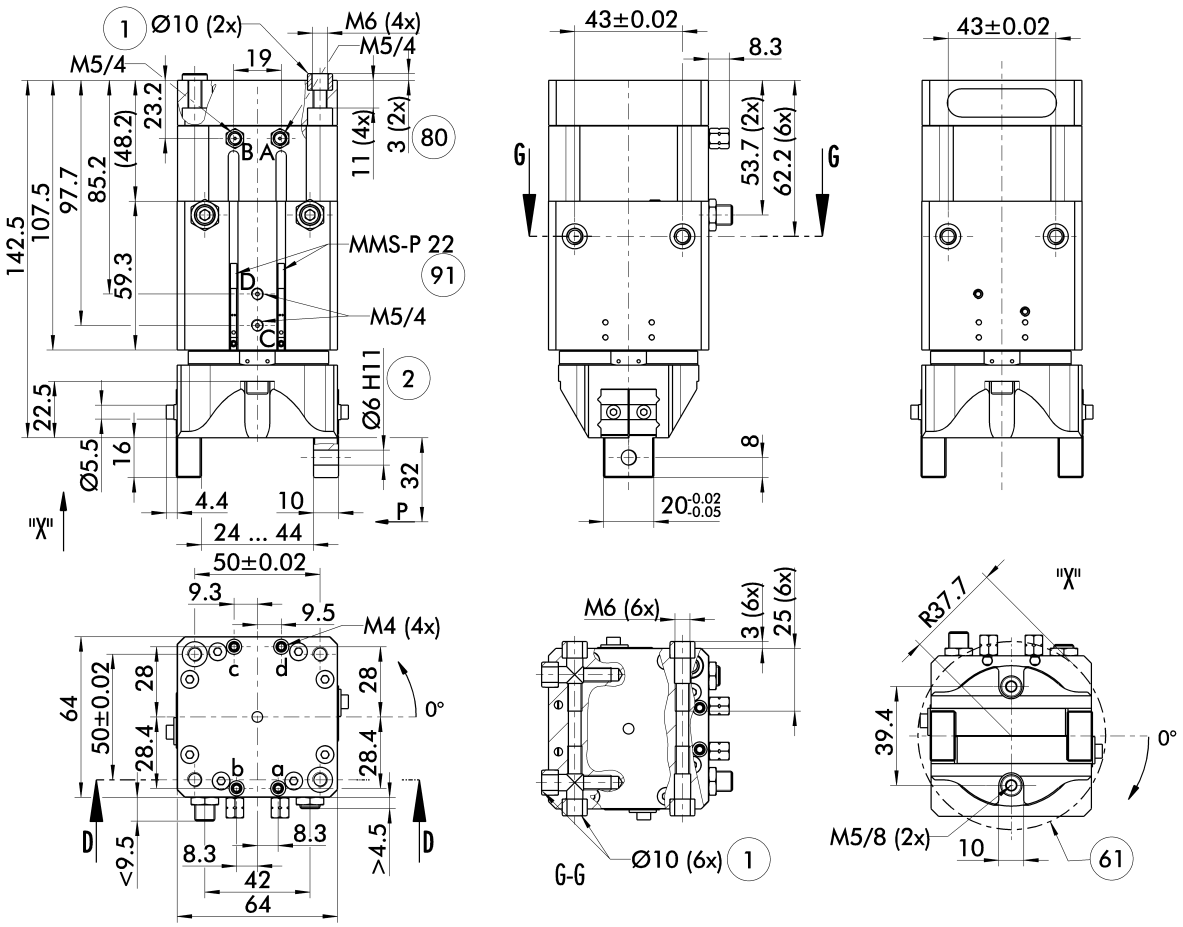


The drawing shows the gripper in the basic version with opened jaws without considering the dimensions of the described options below.

ⓘ The SDV-P pressure maintenance valve can also be used for I.D. or O.D. gripping alternatively or in addition to the spring-loaded, mechanical gripping force maintenance device (see "Accessories" catalog section).

A, a Main/direct connection, rotary actuator clockwise turning
B, b Main/direct connection, rotary actuator anti-clockwise turning
C, c Main/direct connection, gripper opening
D, d Main/direct connection, gripper closing

(1) Gripper connection
(2) Finger connection
(61) Interfering contour during swiveling
(80) Depth of the centering sleeve hole in the matching part
(91) Monitoring of gripping and swiveling

## Hose-free direct connection

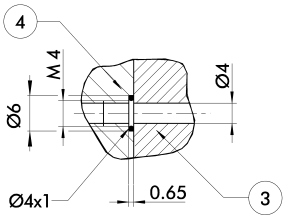


(3) Adapter
(4) Gripper swivel module

The direct connection is used for supplying compressed air without hoses. Instead, the pressure medium is fed through bore-holes in the mounting plate.

## AS/IS gripping force maintenance device

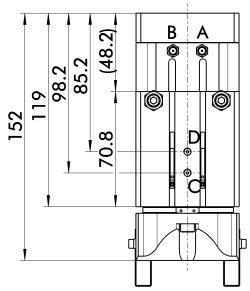


The mechanical gripping force maintenance device ensures a minimum gripping force even in case of pressure drop. This acts as closing force in the AS version, and as opening force in the IS version. In addition, the gripping force maintenance device can also be used for increasing the gripping force or for single-acting gripping.

## Version with shock absorbers

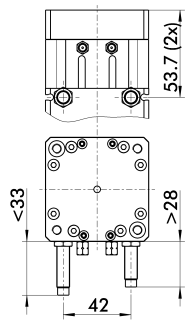


The drawing shows changes in dimensions of the shock absorber versions, compared to the elastomer versions shown on the main view.

## Stacked arrangement

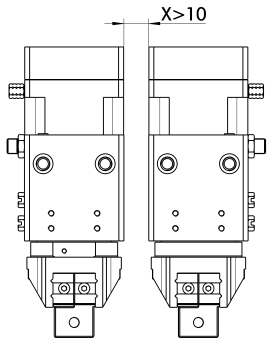


CAUTION: Monitoring is carried out by magnetic switches, and in case of side-by-side assembly of several units, a minimum distance of X mm between the units must be maintained.

## Finger blanks

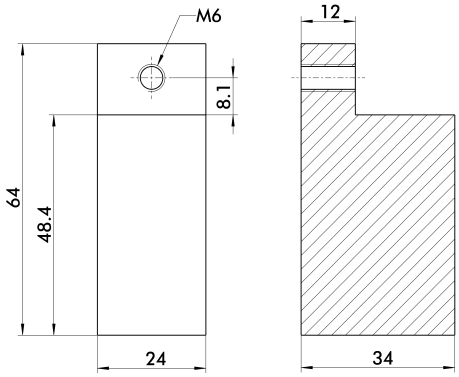


Finger blanks for customized subsequent machining

| Description | ID | Material | Scope of delivery |
|---|---|---|---|
| Finger blanks | | | |
| ABR 64 | **0340215** | Aluminum | 2 |

## Programmable magnetic switch

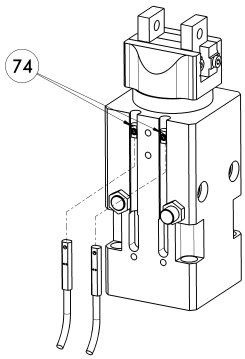


74 Stop for MMS-P

Position monitoring with two programmable positions per sensor. The end position monitoring is mounted in the C-slot.

| Description | ID | Recommended product |
|---|---|---|
| Programmable magnetic switch | | |
| MMS-P 22-S-M8-PNP | **0301370** | • |
| MMSK-P 22-S-PNP | **0301371** | |
| Connection cables | | |
| KA BG08-L 4P-0500 | **0307767** | |
| KA BG08-L 4P-1000 | **0307768** | |
| KA BW08-L 4P-0500 | **0307765** | |
| KA BW08-L 4P-1000 | **0307766** | |
| Sensor Distributor | | |
| V2-M8-4P-2XM8-3P | **0301380** | |

ⓘ Please note the minimum permitted bending radii for the sensor cables, which are generally 35 mm.

ⓘ Per each GSM two sensors MMS-P are required. If standard extension cables (M8-3P) are used, the sensor distributor can be applied.


You can find more detailed information and individual parts of the above-mentioned accessories in the “Accessories” catalog section.

## Mounting kit for proximity switches – angle of rotation 90°

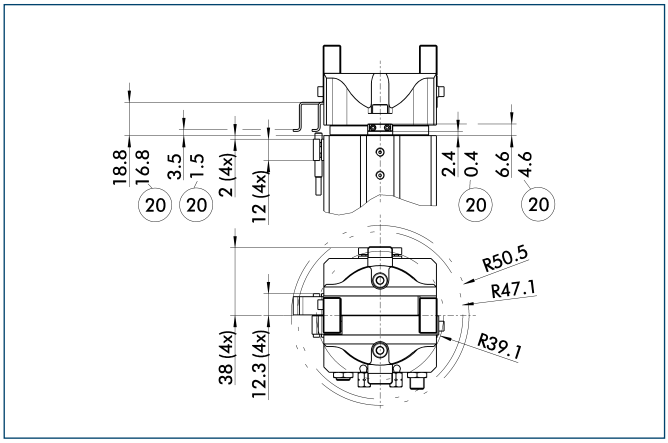


⑳ For AS / IS version

The mounting kits for the 90° and 180° GSM versions are identical, only the mounting is different. The mounting kit consists of two switch cams, two operating cams and small components. The proximity switches must be ordered separately.

| Description | ID |
|---|---|
| Mounting kit for proximity switch | |
| AS-GSM-P 64 | **0304937** |

ⓘ This mounting kit needs to be ordered optionally as an accessory.

## Mounting kit for proximity switches – angle of rotation 180°

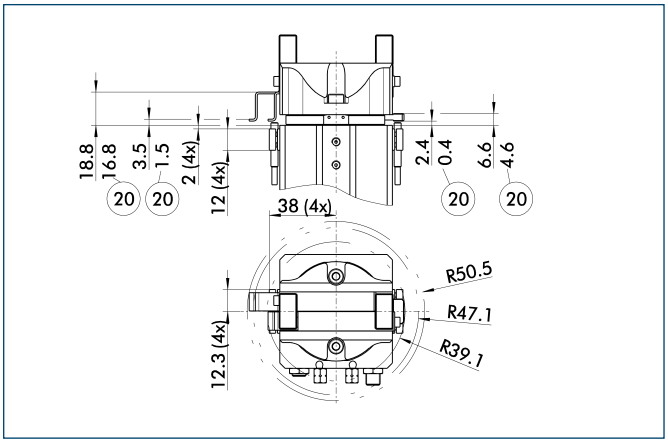


⑳ For AS / IS version

The mounting kits for the 90° and 180° GSM versions are identical, only the mounting is different. The mounting kit consists of two switch cams, two operating cams (only one needs to be fitted, see operating manual), four sensor brackets and small components. The proximity switches must be ordered separately.

| Description | ID |
|---|---|
| Mounting kit for proximity switch | |
| AS-GSM-P 64 | **0304937** |

ⓘ This mounting kit needs to be ordered optionally as an accessory.

## Inductive proximity switches

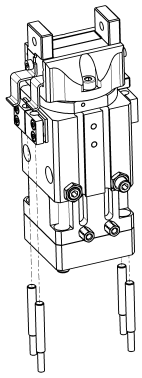

End position monitoring mounted with mounting kit

| Description | ID | Recommended product |
|---|---|---|
| Mounting kit for proximity switch | | |
| AS-GSM-P 64 | **0304937** | |
| Inductive proximity switches | | |
| IN 40-S-M8 | **0301474** | • |
| IN 40-S-M12 | **0301574** | |
| INK 40-S | **0301555** | |

ⓘ Per each GSM four sensors (closer/NO) are required, optionally also an extension cable. The conditions of the swivelling or gripping processes are evaluated of the control unit by logic evaluation of the four sensor signals. If inductive proximity switches should be used, please take care that the switching positions cannot be adjusted.

ⓘ This mounting kit needs to be ordered optionally as an accessory.

ⓘ Please note the minimum permitted bending radii for the sensor cables, which are generally 35 mm.

You can find more detailed information and individual parts of the above-mentioned accessories in the “Accessories” catalog section.

# GSM-Z



**Sizes**
30 ... 45

**Weight**
0.35 kg ... 1.32 kg

**Gripping force**
55 N ... 310 N

**Stroke per finger**
3 mm ... 5 mm

**Torque**
0.3 Nm ... 2.7 Nm

## Application example

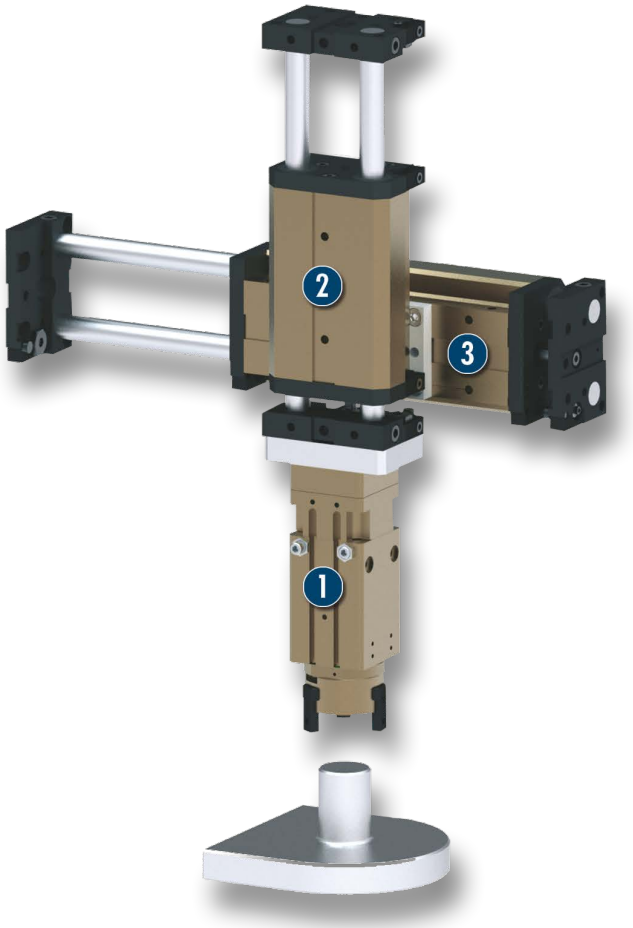


**Compact, economical linear rotary gripper unit for mounting a suspension device**

1. GSM-Z Gripper Swivel Module
2. Linear Module KLM
3. Linear Module KLM

## Concentric Gripper Swivel Module

compact rotary gripping combination, consisting of a powerful rotor drive, an end-position and damping device and a 3-finger concentric gripper

## Field of application

gripping and rotating combined in a single compact module, for automated assembly in places with a restricted amount of available space

## Your advantages and benefits

**Space-saving**
as the rotary drive, end-position damping unit and gripper are merged in one compact module

**Economical**
since adapter plates are not needed, there will be costs for project planning and engineering design

**T-slot guidance**
for precise gripping at high moment loads

**Flexible**
through several mounting options, infinitely adjustable rotating angle and numerous product versions

**Process reliability**
as moving cables and hoses are replaced by integrated feed-throughs

**Mounting from three sides in three screw directions possible**
for universal and flexible assembly of the rotary gripper module

**Air supply via hose-free direct connection or screw connections**
for the connection of exactly the right rotary gripper module in all automation solutions

**Comprehensive accessories**
through the use of existing gripper components




## General note to the series

**Principle of function**
Combined rotor and piston drive

**Housing material**
Aluminum alloy, hard-anodized

**Base jaw material**
Steel

**Actuation**
pneumatic, with filtered compressed air (10 microns): dry, lubricated or non-lubricated
Pressure medium: Required quality class of compressed air according to DIN ISO 8573-1: 6 4 4

**Warranty**
24 months (details, general terms and conditions and operation manuals can be downloaded under www.schunk.com)

**Scope of delivery**
Centering sleeves, O-rings for direct connection, screws for lateral fastening, steel balls for adjustment of the swiveling angle, assembly and operation manual with declaration of incorporation

**Gripping force maintenance device**
with either mechanical gripping force maintenance or SDV-P pressure maintenance valve

## Sectional diagram

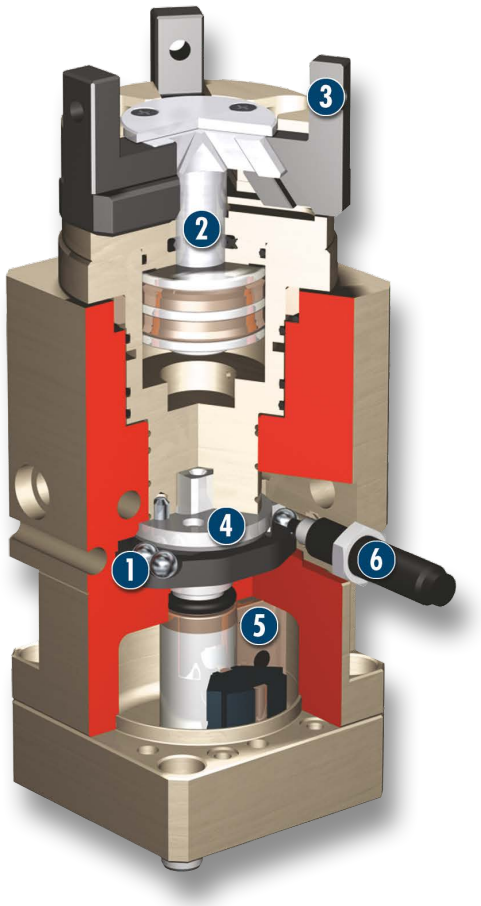


1 **Preset of rotating angle**
using steel balls for any desired angle of rotation

2 **Gripper drive**
double-acting piston drive system with wedge hook

3 **Base jaw**
for mounting the top fingers

4 **End-position damping assembly**
for end-position adjustment and damping

5 **Rotor**
as a compact, powerful drive

6 **Hydraulic shock absorber**
to increase the damping performance

## Functional description

As its rotor is actuated with pressure, the drive rotates the integrated gripping module. The module itself is driven by its own piston. The piston motion is subsequently transformed into a synchronized gripping motion.

## Options and special information

Despite the many options and versions already available as standard, SCHUNK also designs and produces customized versions on request.

## Accessories

Accessories from SCHUNK – the suitable supplement for maximum functionality, reliability and performance of all automation modules.

### Centering sleeves



### Fittings



### Programmable magnetic switch



### Inductive proximity switches



### Plastic inserts



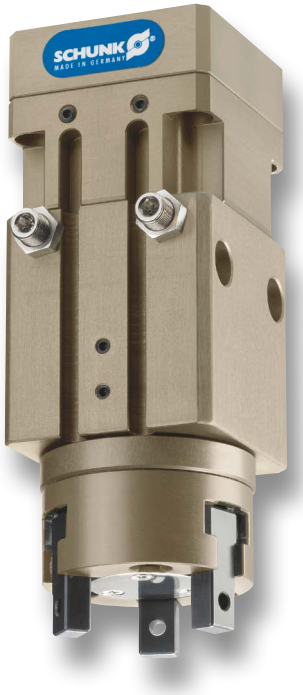


### Sensor cables



### Gripper pads

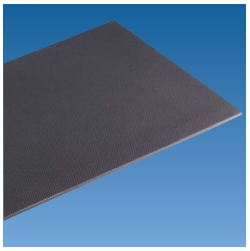

### Sensor Distributor

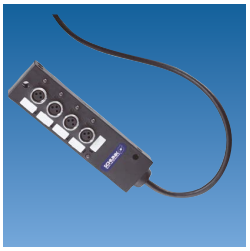

### Pressure maintenance valve



### Finger blanks



ⓘ For the exact size of the required accessories, availability of this size and the designation and ID, please refer to the additional views at the end of the size in question. You will find more detailed information on our accessory range in the “Accessories” catalog section.

## General note to the series

### Gripping force

is the arithmetic total of the gripping force applied to each finger at distance P (see illustration) measured from the upper edge of the gripper.

### Finger length

The finger length is measured from the upper edge of the gripper housing in the direction of the main axis.

### Workpiece weight

The recommended workpiece weight is calculated for a force-type connection with a coefficient of friction of 0.1 and a safety factor of 2 against slippage of the workpiece on acceleration due to gravity g. Considerably heavier workpiece weights are permitted with form-fit gripping.

### Repeat accuracy

is defined as the spread of the limit position after 100 consecutive strokes.

### Closing and opening times, cycle times

Closing and opening times are purely the times that the base jaws or fingers are in motion. Cycle times are purely the times that the rotating part (mostly the pinion) is in motion. Valve switching times, hose filling times or PLC reaction times are not included in the above times and must be taken into consideration when determining cycle times.

### Middle attached load

The middle attached load should constitute a typical load. It is defined as the half of the max. possible mass moment of inertia that can be swiveled without restriction, bouncing or hitting, with a centric load and a vertical rotating axis.

# GSM-Z 30

**Pneumatic • Gripper-Swivel System • Concentric Gripper Swivel Module**



## Gripping force, I.D. gripping

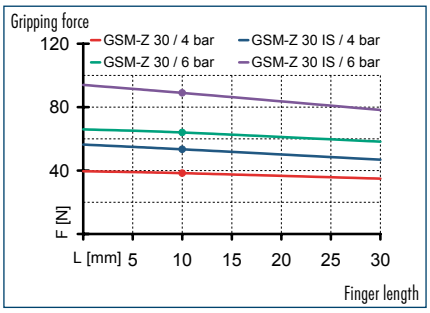


## Gripping force, O.D. gripping

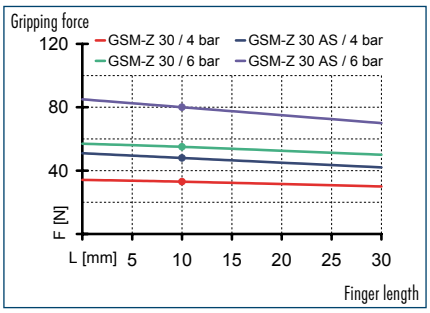


## Finger load

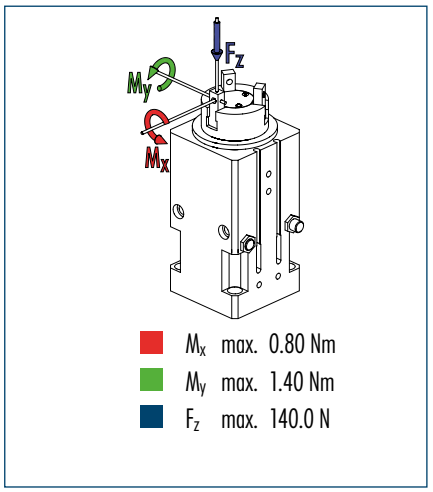


ⓘ The indicated moments and forces are static values, apply per base jaw and may occur simultaneously. $M_y$ may arise in addition to the moment generated by the gripping force itself. If the max. permitted finger weight is exceeded, it is imperative to throttle the air pressure so that the jaw movement occurs without any hitting or bouncing. Service life may be reduced.

## Technical data

| Description | | GSM-Z 30-E-090 | GSM-Z 30-S-090 | GSM-Z 30-AS-E-090 | GSM-Z 30-AS-S-090 | GSM-Z 30-IS-E-090 | GSM-Z 30-IS-S-090 |
|---|---|---|---|---|---|---|---|
| **ID** | | **0304633** | **0304733** | **0304634** | **0304734** | **0304635** | **0304735** |
| End position adjustability | [°] | 90 | 90 | 90 | 90 | 90 | 90 |
| Stroke per finger | [mm] | 3 | 3 | 3 | 3 | 3 | 3 |
| Closing/Opening force | [N] | 55/65 | 55/65 | 80/- | 80/- | -/90 | -/90 |
| Min. spring force | [N] | | | 25 | 25 | 25 | 25 |
| Torque | [Nm] | 0.35 | 0.35 | 0.35 | 0.35 | 0.35 | 0.35 |
| Damping for rotation | | Elastomer damping | hydr. shock absorbers | Elastomer damping | hydr. shock absorbers | Elastomer damping | hydr. shock absorbers |
| Recommended workpiece weight | [kg] | 0.25 | 0.25 | 0.25 | 0.25 | 0.25 | 0.25 |
| Air consumption for gripping | [cm³] | 4.51 | 4.51 | 4.51 | 4.51 | 4.51 | 4.51 |
| Air consumption for swiveling | [cm³] | 9 | 9 | 9 | 9 | 9 | 9 |
| Weight | [kg] | 0.35 | 0.35 | 0.4 | 0.4 | 0.4 | 0.4 |
| Nominal operating pressure | [bar] | 6 | 6 | 6 | 6 | 6 | 6 |
| Max. operating pressure | [bar] | 6.5 | 6.5 | 6.5 | 6.5 | 6.5 | 6.5 |
| Minimum operating pressure for gripping | [bar] | 2 | 2 | 4 | 4 | 4 | 4 |
| Minimum operating pressure for swiveling | [bar] | 3.5 | 3.5 | 3.5 | 3.5 | 3.5 | 3.5 |
| Closing/opening time | [s] | 0.02/0.02 | 0.02/0.02 | 0.02/0.04 | 0.02/0.04 | 0.04/0.02 | 0.04/0.02 |
| Swiveling time with middle attached load | [s] | 0.06 | 0.12 | 0.12 | 0.12 | 0.12 | 0.12 |
| Max. permitted finger length | [mm] | 30 | 30 | 30 | 30 | 30 | 30 |
| Max. permitted weight per finger | [kg] | 0.03 | 0.03 | 0.03 | 0.03 | 0.03 | 0.03 |
| IP class | | 40 | 40 | 40 | 40 | 40 | 40 |
| Min./max. ambient temperature | [°C] | -10/90 | 5/60 | -10/90 | 5/60 | -10/90 | 5/60 |
| Repeat accuracy for gripping | [mm] | 0.01 | 0.01 | 0.01 | 0.01 | 0.01 | 0.01 |
| Repeat accuracy for swiveling | [°] | 0.1 | 0.1 | 0.1 | 0.1 | 0.1 | 0.1 |

### OPTIONS and their characteristics

| Description | | GSM-Z 30-E-180 | GSM-Z 30-S-180 | GSM-Z 30-AS-E-180 | GSM-Z 30-AS-S-180 | GSM-Z 30-IS-E-180 | GSM-Z 30-IS-S-180 |
|---|---|---|---|---|---|---|---|
| ID | | **0303833** | **0303933** | **0303834** | **0303934** | **0303835** | **0303935** |
| End position adjustability | [°] | 180 | 180 | 180 | 180 | 180 | 180 |
| Air consumption for swiveling | [cm³] | 15 | 15 | 15 | 15 | 15 | 15 |
| Swiveling time with middle attached load | [s] | 0.18 | 0.18 | 0.18 | 0.18 | 0.18 | 0.18 |

## Main view

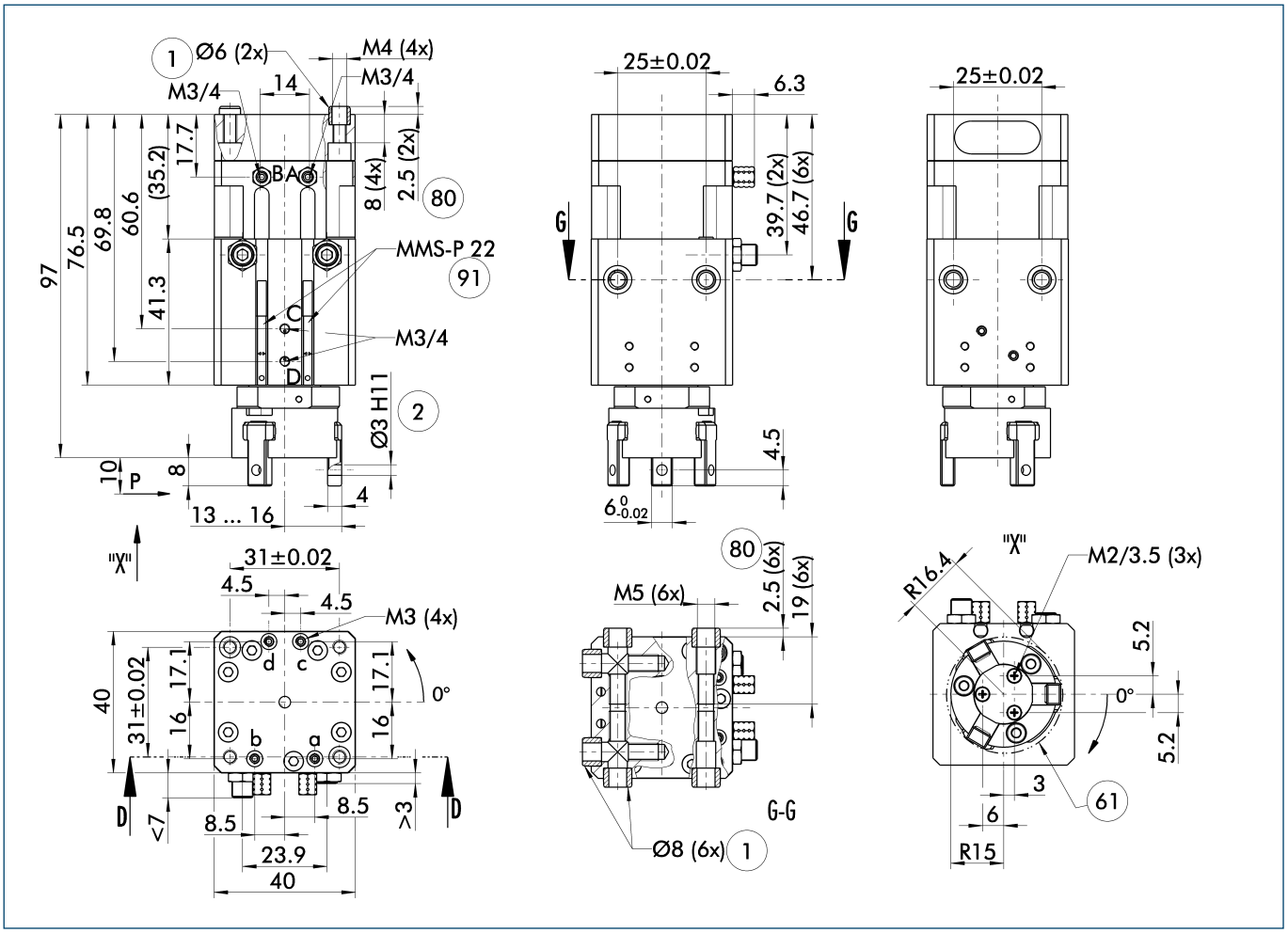


The drawing shows the gripper in the basic version with opened jaws without considering the dimensions of the described options below.

ⓘ The SDV-P pressure maintenance valve can also be used for I.D. or O.D. gripping alternatively or in addition to the spring-loaded, mechanical gripping force maintenance device (see "Accessories" catalog section).

A, a Main/direct connection, rotary actuator clockwise turning
B, b Main/direct connection, rotary actuator anti-clockwise turning
C, c Main/direct connection, gripper opening
D, d Main/direct connection, gripper closing

① Connection gripper-rotary actuator
② Finger connection
⑥① Interfering contour during swiveling
⑧⓪ Depth of the centering sleeve hole in the matching part
⑨① Monitoring of gripping and swiveling

## Hose-free direct connection

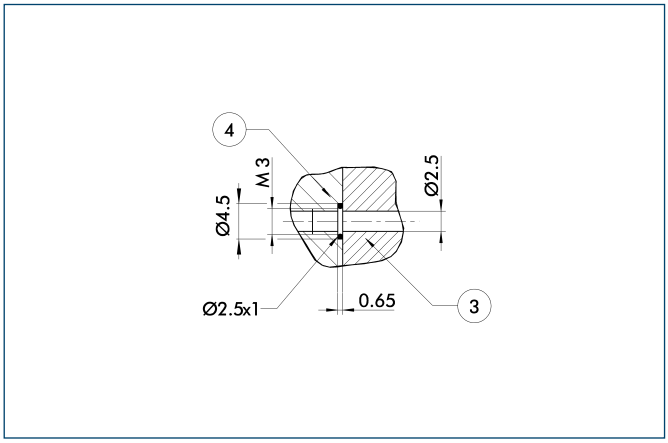


③ Adapter
④ Gripper swivel module

The direct connection is used for supplying compressed air without hoses. Instead, the pressure medium is fed through bore-holes in the mounting plate.

## AS/IS gripping force maintenance device

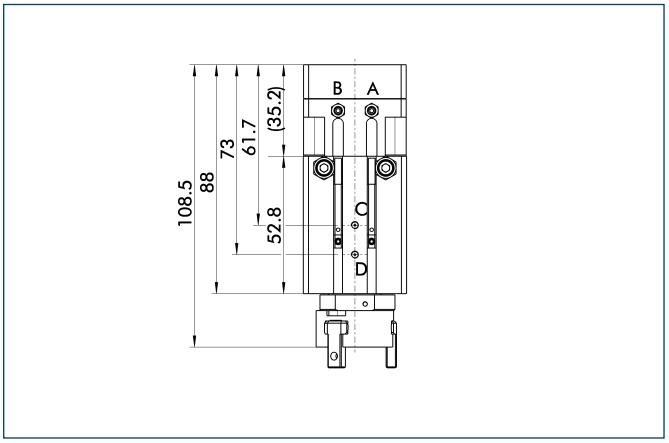


The mechanical gripping force maintenance device ensures a minimum gripping force even in case of pressure drop. This acts as closing force in the AS version, and as opening force in the IS version. In addition, the gripping force maintenance device can also be used for increasing the gripping force or for single-acting gripping.

## Version with shock absorbers

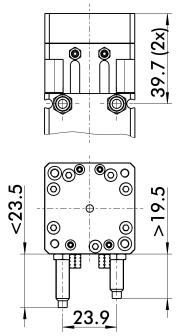


The drawing shows changes in dimensions of the shock absorber versions, compared to the elastomer versions shown on the main view.

## Stacked arrangement

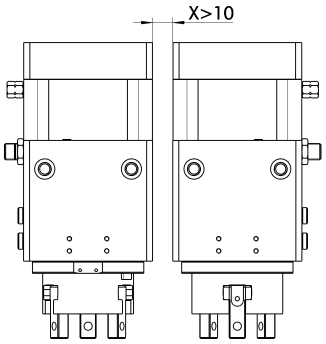


CAUTION: Monitoring is carried out by magnetic switches, and in case of side-by-side assembly of several units, a minimum distance of X mm between the units must be maintained.

## Finger blanks

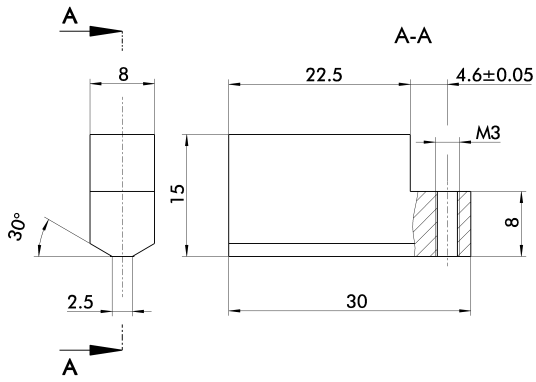


Finger blanks for customized subsequent machining

| Description | ID | Material | Scope of delivery |
|---|---|---|---|
| Finger blanks | | | |
| ABR 30 | **0340519** | Aluminum | 3 |

## Programmable magnetic switch

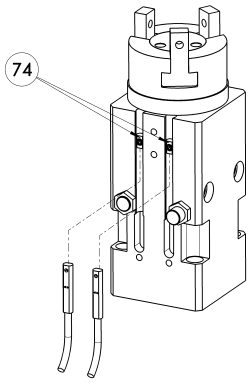


74 Stop for MMS-P

Position monitoring with two programmable positions per sensor. The end position monitoring is mounted in the C-slot.

| Description | ID | Recommended product |
|---|---|---|
| Programmable magnetic switch | | |
| MMS-P 22-S-M8-PNP | **0301370** | • |
| MMSK-P 22-S-PNP | **0301371** | |
| Connection cables | | |
| KA BG08-L 4P-0500 | **0307767** | |
| KA BG08-L 4P-1000 | **0307768** | |
| KA BW08-L 4P-0500 | **0307765** | |
| KA BW08-L 4P-1000 | **0307766** | |
| Sensor Distributor | | |
| V2-M8-4P-2XM8-3P | **0301380** | |

ⓘ Please note the minimum permitted bending radii for the sensor cables, which are generally 35 mm.

ⓘ Per each GSM two sensors MMS-P are required. If standard extension cables (M8-3P) are used, the sensor distributor can be applied.


You can find more detailed information and individual parts of the above-mentioned accessories in the “Accessories” catalog section.

## Mounting kit for proximity switches – angle of rotation 90°

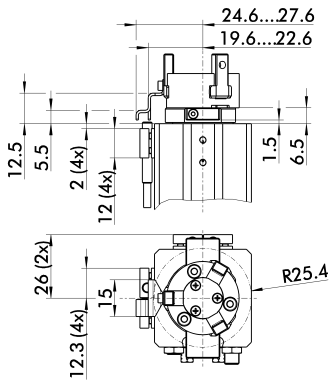


The mounting kits for the 90° and 180° GSM versions are identical, only the mounting is different. The mounting kit consists of two switch cams, two operating cams and small components. The proximity switches must be ordered separately.

| Description | ID |
|---|---|
| Mounting kit for proximity switch | |
| AS-GSM-Z 30 | **0304944** |

ⓘ This mounting kit needs to be ordered optionally as an accessory.

## Mounting kit for proximity switches – angle of rotation 180°

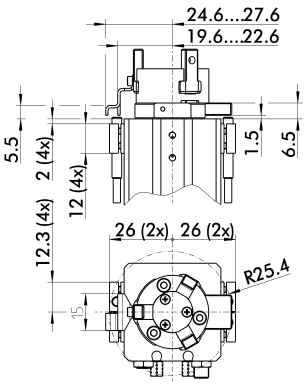


The mounting kits for the 90° and 180° GSM versions are identical, only the mounting is different. The mounting kit consists of two switch cams, two operating cams (only one needs to be fitted, see operating manual), four sensor brackets and small components. The proximity switches must be ordered separately.

| Description | ID |
|---|---|
| Mounting kit for proximity switch | |
| AS-GSM-Z 30 | **0304944** |

ⓘ This mounting kit needs to be ordered optionally as an accessory.

## Inductive proximity switches

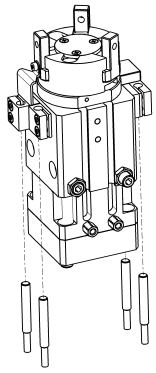

End position monitoring mounted with mounting kit

| Description | ID | Recommended product |
|---|---|---|
| Mounting kit for proximity switch | | |
| AS-GSM-Z 30 | **0304944** | |
| Inductive proximity switches | | |
| IN 40-S-M8 | **0301474** | • |
| IN 40-S-M12 | **0301574** | |
| INK 40-S | **0301555** | |

ⓘ Per each GSM four sensors (closer/NO) are required, optionally also an extension cable. The conditions of the swivelling or gripping processes are evaluated of the control unit by logic evaluation of the four sensor signals. If inductive proximity switches should be used, please take care that the switching positions cannot be adjusted.

ⓘ This mounting kit needs to be ordered optionally as an accessory.

ⓘ Please note the minimum permitted bending radii for the sensor cables, which are generally 35 mm.

You can find more detailed information and individual parts of the above-mentioned accessories in the “Accessories” catalog section.

# GSM-Z 38

**Pneumatic • Gripper-Swivel System • Concentric Gripper Swivel Module**



## Gripping force, I.D. gripping

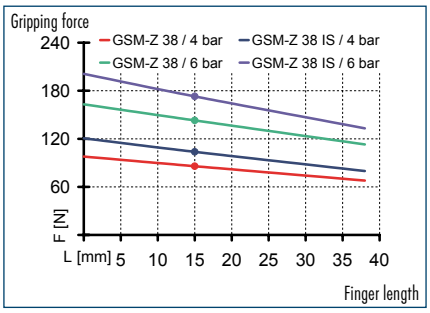


## Gripping force, O.D. gripping

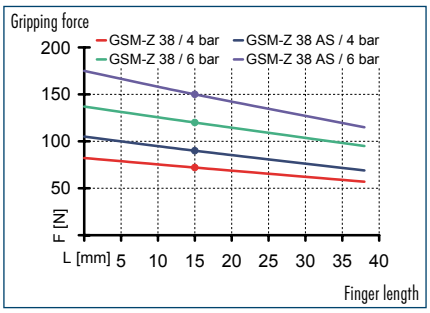


## Finger load

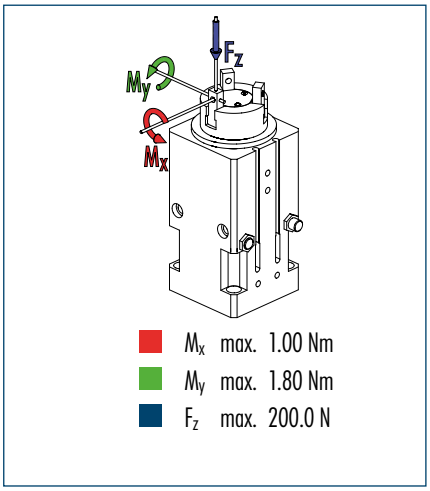


ⓘ The indicated moments and forces are static values, apply per base jaw and may occur simultaneously. $M_y$ may arise in addition to the moment generated by the gripping force itself. If the max. permitted finger weight is exceeded, it is imperative to throttle the air pressure so that the jaw movement occurs without any hitting or bouncing. Service life may be reduced.

## Technical data

| Description | | GSM-Z 38-E-090 | GSM-Z 38-S-090 | GSM-Z 38-AS-E-090 | GSM-Z 38-AS-S-090 | GSM-Z 38-IS-E-090 | GSM-Z 38-IS-S-090 |
|---|---|---|---|---|---|---|---|
| **ID** | | **0304643** | **0304743** | **0304644** | **0304744** | **0304645** | **0304745** |
| End position adjustability | [°] | 90 | 90 | 90 | 90 | 90 | 90 |
| Stroke per finger | [mm] | 4 | 4 | 4 | 4 | 4 | 4 |
| Closing/Opening force | [N] | 120/140 | 120/140 | 150/- | 150/- | -/160 | -/160 |
| Min. spring force | [N] | | | 30 | 30 | 40 | 40 |
| Torque | [Nm] | 0.3 | 0.3 | 0.3 | 0.3 | 0.3 | 0.3 |
| Damping for rotation | | Elastomer damping | hydr. shock absorbers | Elastomer damping | hydr. shock absorbers | Elastomer damping | hydr. shock absorbers |
| Recommended workpiece weight | [kg] | 0.6 | 0.6 | 0.6 | 0.6 | 0.6 | 0.6 |
| Air consumption for gripping | [cm³] | 6.58 | 6.58 | 6.58 | 6.58 | 6.58 | 6.58 |
| Air consumption for swiveling | [cm³] | 9 | 9 | 9 | 9 | 9 | 9 |
| Weight | [kg] | 0.4 | 0.4 | 0.48 | 0.48 | 0.48 | 0.48 |
| Nominal operating pressure | [bar] | 6 | 6 | 6 | 6 | 6 | 6 |
| Max. operating pressure | [bar] | 6.5 | 6.5 | 6.5 | 6.5 | 6.5 | 6.5 |
| Minimum operating pressure for gripping | [bar] | 2 | 2 | 4 | 4 | 4 | 4 |
| Minimum operating pressure for swiveling | [bar] | 4 | 4 | 4 | 4 | 4 | 4 |
| Closing/opening time | [s] | 0.02/0.02 | 0.02/0.02 | 0.02/0.04 | 0.02/0.04 | 0.04/0.02 | 0.04/0.02 |
| Swiveling time with middle attached load | [s] | 0.14 | 0.14 | 0.14 | 0.14 | 0.14 | 0.14 |
| Max. permitted finger length | [mm] | 38 | 38 | 38 | 38 | 38 | 38 |
| Max. permitted weight per finger | [kg] | 0.05 | 0.05 | 0.05 | 0.05 | 0.05 | 0.05 |
| IP class | | 40 | 40 | 40 | 40 | 40 | 40 |
| Min./max. ambient temperature | [°C] | -10/90 | 5/60 | -10/90 | 5/60 | -10/90 | 5/60 |
| Repeat accuracy for gripping | [mm] | 0.01 | 0.01 | 0.01 | 0.01 | 0.01 | 0.01 |
| Repeat accuracy for swiveling | [°] | 0.1 | 0.1 | 0.1 | 0.1 | 0.1 | 0.1 |

### OPTIONS and their characteristics

| Description | | GSM-Z 38-E-180 | GSM-Z 38-S-180 | GSM-Z 38-AS-E-180 | GSM-Z 38-AS-S-180 | GSM-Z 38-IS-E-180 | GSM-Z 38-IS-S-180 |
|---|---|---|---|---|---|---|---|
| ID | | **0303843** | **0303943** | **0303844** | **0303944** | **0303845** | **0303945** |
| End position adjustability | [°] | 180 | 180 | 180 | 180 | 180 | 180 |
| Air consumption for swiveling | [cm³] | 15 | 15 | 15 | 15 | 15 | 15 |
| Swiveling time with middle attached load | [s] | 0.22 | 0.22 | 0.22 | 0.22 | 0.22 | 0.22 |

## Main view

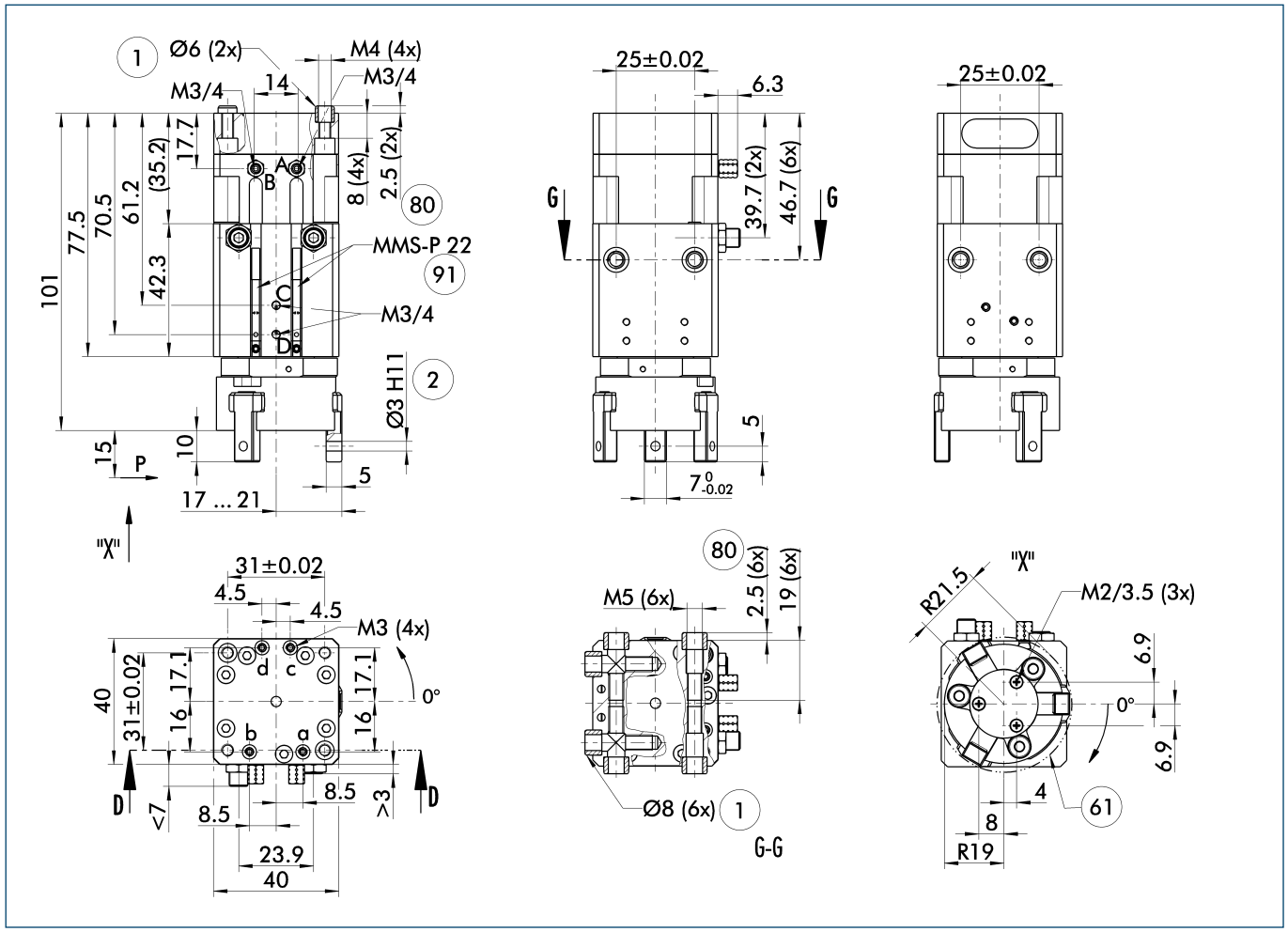


The drawing shows the gripper in the basic version with opened jaws without considering the dimensions of the described options below.

ⓘ The SDV-P pressure maintenance valve can also be used for I.D. or O.D. gripping alternatively or in addition to the spring-loaded, mechanical gripping force maintenance device (see "Accessories" catalog section).

A, a Main/direct connection, rotary actuator clockwise turning
B, b Main/direct connection, rotary actuator anti-clockwise turning
C, c Main/direct connection, gripper opening
D, d Main/direct connection, gripper closing

① Rotary actuator connection
② Finger connection
61 Interfering contour during swiveling
80 Depth of the centering sleeve hole in the matching part
91 Monitoring of gripping and swiveling

## Hose-free direct connection

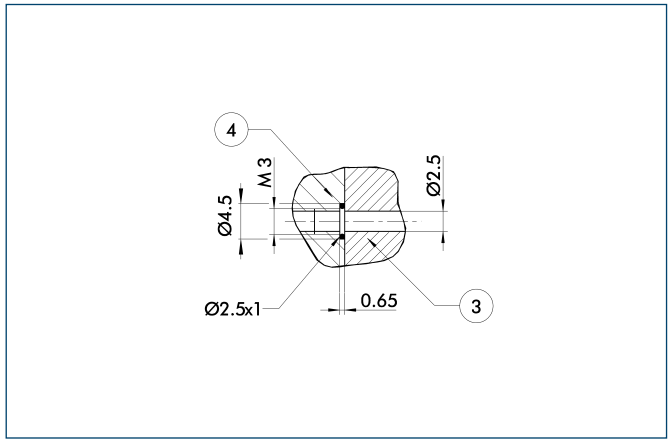


③ Adapter
④ Gripper swivel module

The direct connection is used for supplying compressed air without hoses. Instead, the pressure medium is fed through bore-holes in the mounting plate.

## AS/IS gripping force maintenance device

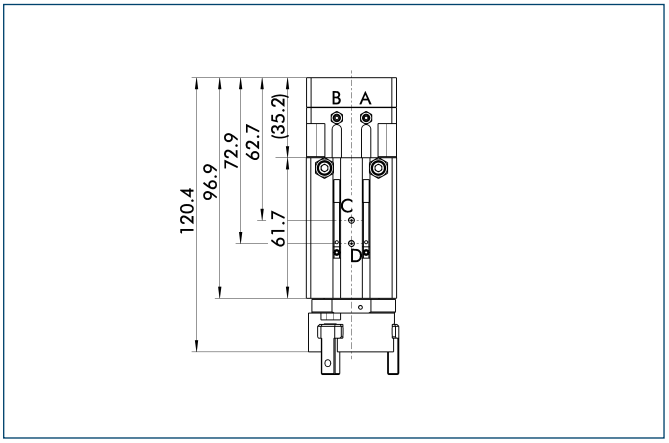


The mechanical gripping force maintenance device ensures a minimum gripping force even in case of pressure drop. This acts as closing force in the AS version, and as opening force in the IS version. In addition, the gripping force maintenance device can also be used for increasing the gripping force or for single-acting gripping.

## Version with shock absorbers

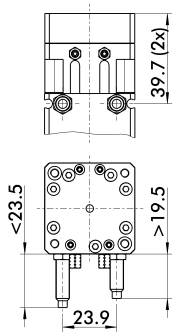


The drawing shows changes in dimensions of the shock absorber versions, compared to the elastomer versions shown on the main view.

## Stacked arrangement

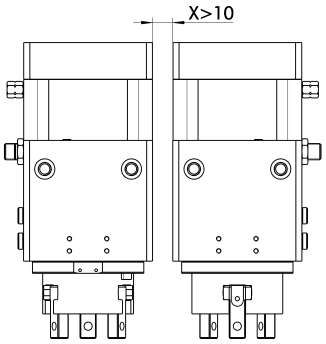


CAUTION: Monitoring is carried out by magnetic switches, and in case of side-by-side assembly of several units, a minimum distance of X mm between the units must be maintained.

## Finger blanks

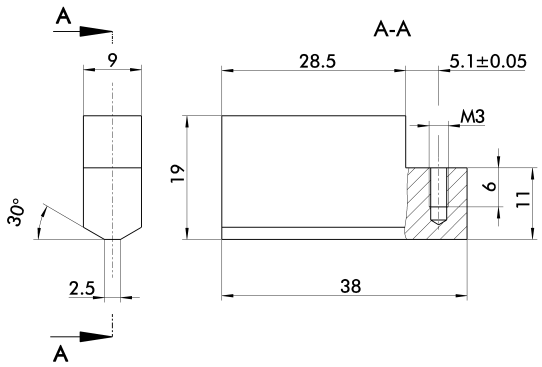


Finger blanks for customized subsequent machining

| Description | ID | Material | Scope of delivery |
|---|---|---|---|
| Finger blanks | | | |
| ABR 38 | **0340529** | Aluminum | 3 |

## Programmable magnetic switch

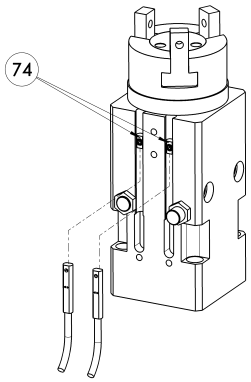


(74) Stop for MMS-P

Position monitoring with two programmable positions per sensor. The end position monitoring is mounted in the C-slot.

| Description | ID | Recommended product |
|---|---|---|
| Programmable magnetic switch | | |
| MMS-P 22-S-M8-PNP | **0301370** | • |
| MMSK-P 22-S-PNP | **0301371** | |
| Connection cables | | |
| KA BG08-L 4P-0500 | **0307767** | |
| KA BG08-L 4P-1000 | **0307768** | |
| KA BW08-L 4P-0500 | **0307765** | |
| KA BW08-L 4P-1000 | **0307766** | |
| Sensor Distributor | | |
| V2-M8-4P-2XM8-3P | **0301380** | |

ⓘ Please note the minimum permitted bending radii for the sensor cables, which are generally 35 mm.

ⓘ Per each GSM two sensors MMS-P are required. If standard extension cables (M8-3P) are used, the sensor distributor can be applied.

You can find more detailed information and individual parts of the above-mentioned accessories in the “Accessories” catalog section.

## Mounting kit for proximity switches – angle of rotation 90°

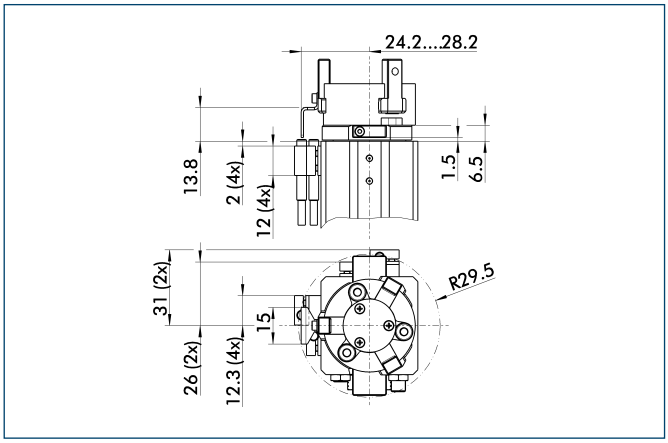


The mounting kits for the 90° and 180° GSM versions are identical, only the mounting is different. The mounting kit consists of two switch cams, two operating cams and small components. The proximity switches must be ordered separately.

| Description | ID |
|---|---|
| Mounting kit for proximity switch | |
| AS-GSM-Z 38 | **0304945** |

ⓘ This mounting kit needs to be ordered optionally as an accessory.

## Mounting kit for proximity switches – angle of rotation 180°

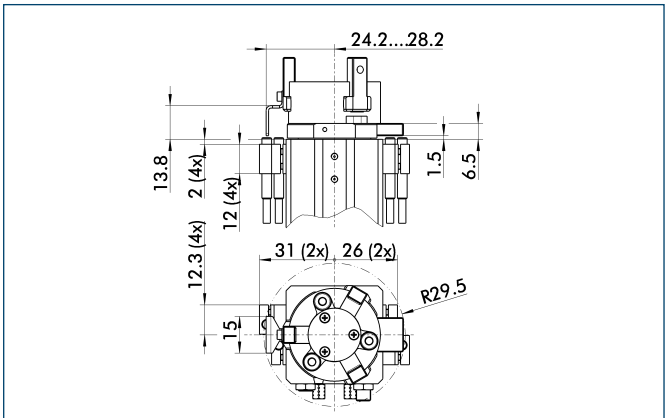


The mounting kits for the 90° and 180° GSM versions are identical, only the mounting is different. The mounting kit consists of two switch cams, two operating cams (only one needs to be fitted, see operating manual), four sensor brackets and small components. The proximity switches must be ordered separately.

| Description | ID |
|---|---|
| Mounting kit for proximity switch | |
| AS-GSM-Z 38 | **0304945** |

ⓘ This mounting kit needs to be ordered optionally as an accessory.

## Inductive proximity switches

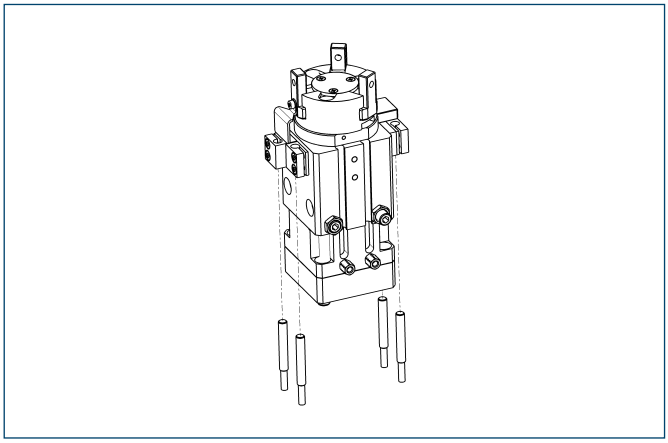

End position monitoring mounted with mounting kit

| Description | ID | Recommended product |
|---|---|---|
| Mounting kit for proximity switch | | |
| AS-GSM-Z 38 | **0304945** | |
| Inductive proximity switches | | |
| IN 40-S-M8 | **0301474** | • |
| IN 40-S-M12 | **0301574** | |
| INK 40-S | **0301555** | |

ⓘ Per each GSM four sensors (closer/NO) are required, optionally also an extension cable. The conditions of the swivelling or gripping processes are evaluated of the control unit by logic evaluation of the four sensor signals. If inductive proximity switches should be used, please take care that the switching positions cannot be adjusted.

ⓘ This mounting kit needs to be ordered optionally as an accessory.

ⓘ Please note the minimum permitted bending radii for the sensor cables, which are generally 35 mm.

You can find more detailed information and individual parts of the above-mentioned accessories in the “Accessories” catalog section.

# GSM-Z 45

**Pneumatic • Gripper-Swivel System • Concentric Gripper Swivel Module**



## Gripping force, I.D. gripping

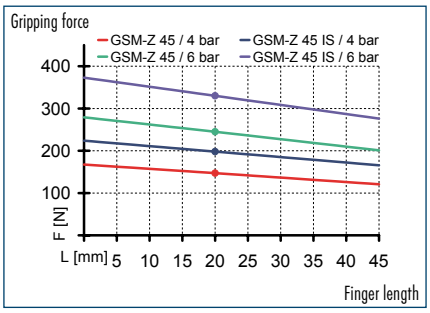


## Gripping force, O.D. gripping

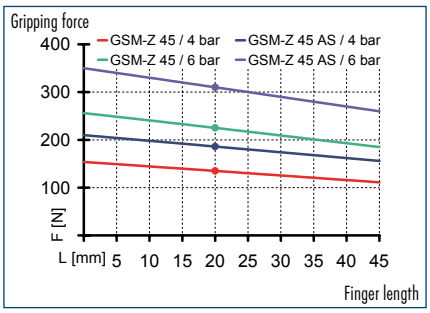


## Finger load

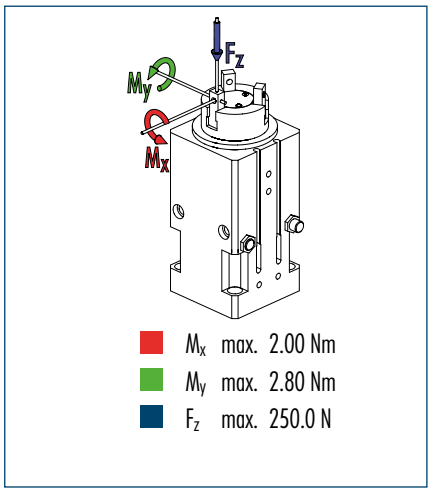


ⓘ The indicated moments and forces are static values, apply per base jaw and may occur simultaneously. $M_y$ may arise in addition to the moment generated by the gripping force itself. If the max. permitted finger weight is exceeded, it is imperative to throttle the air pressure so that the jaw movement occurs without any hitting or bouncing. Service life may be reduced.

## Technical data

| Description | | GSM-Z 45-E-090 | GSM-Z 45-S-090 | GSM-Z 45-AS-E-090 | GSM-Z 45-AS-S-090 | GSM-Z 45-IS-E-090 | GSM-Z 45-IS-S-090 |
|---|---|---|---|---|---|---|---|
| **ID** | | **0304663** | **0304763** | **0304664** | **0304764** | **0304665** | **0304765** |
| End position adjustability | [°] | 90 | 90 | 90 | 90 | 90 | 90 |
| Stroke per finger | [mm] | 5 | 5 | 5 | 5 | 5 | 5 |
| Closing/Opening force | [N] | 225/245 | 225/245 | 310/- | 310/- | -/310 | -/310 |
| Min. spring force | [N] | | | 85 | 85 | 95 | 95 |
| Torque | [Nm] | 2.7 | 2.7 | 2.7 | 2.7 | 2.7 | 2.7 |
| Damping for rotation | | Elastomer damping | hydr. shock absorbers | Elastomer damping | hydr. shock absorbers | Elastomer damping | hydr. shock absorbers |
| Recommended workpiece weight | [kg] | 1.1 | 1.1 | 1.1 | 1.1 | 1.1 | 1.1 |
| Air consumption for gripping | [cm³] | 13.85 | 13.85 | 13.85 | 13.85 | 13.85 | 13.85 |
| Air consumption for swiveling | [cm³] | 51 | 51 | 51 | 51 | 51 | 51 |
| Weight | [kg] | 1.2 | 1.2 | 1.32 | 1.32 | 1.32 | 1.32 |
| Nominal operating pressure | [bar] | 6 | 6 | 6 | 6 | 6 | 6 |
| Max. operating pressure | [bar] | 6.5 | 6.5 | 6.5 | 6.5 | 6.5 | 6.5 |
| Minimum operating pressure for gripping | [bar] | 2 | 2 | 4 | 4 | 4 | 4 |
| Minimum operating pressure for swiveling | [bar] | 3 | 3 | 3 | 3 | 3 | 3 |
| Closing/opening time | [s] | 0.05/0.05 | 0.05/0.05 | 0.04/0.05 | 0.04/0.05 | 0.05/0.04 | 0.05/0.04 |
| Swiveling time with middle attached load | [s] | 0.14 | 0.14 | 0.14 | 0.14 | 0.14 | 0.14 |
| Max. permitted finger length | [mm] | 45 | 45 | 45 | 45 | 45 | 45 |
| Max. permitted weight per finger | [kg] | 0.08 | 0.08 | 0.08 | 0.08 | 0.08 | 0.08 |
| IP class | | 40 | 40 | 40 | 40 | 40 | 40 |
| Min./max. ambient temperature | [°C] | -10/90 | 5/60 | -10/90 | 5/60 | -10/90 | 5/60 |
| Repeat accuracy for gripping | [mm] | 0.01 | 0.01 | 0.01 | 0.01 | 0.01 | 0.01 |
| Repeat accuracy for swiveling | [°] | 0.1 | 0.1 | 0.1 | 0.1 | 0.1 | 0.1 |

### OPTIONS and their characteristics

| Description | | GSM-Z 45-E-180 | GSM-Z 45-S-180 | GSM-Z 45-AS-E-180 | GSM-Z 45-AS-S-180 | GSM-Z 45-IS-E-180 | GSM-Z 45-IS-S-180 |
|---|---|---|---|---|---|---|---|
| ID | | **0303863** | **0303963** | **0303864** | **0303964** | **0303865** | **0303965** |
| End position adjustability | [°] | 180 | 180 | 180 | 180 | 180 | 180 |
| Air consumption for swiveling | [cm³] | 85 | 85 | 85 | 85 | 85 | 85 |
| Swiveling time with middle attached load | [s] | 0.24 | 0.24 | 0.24 | 0.24 | 0.24 | 0.24 |

## Main view

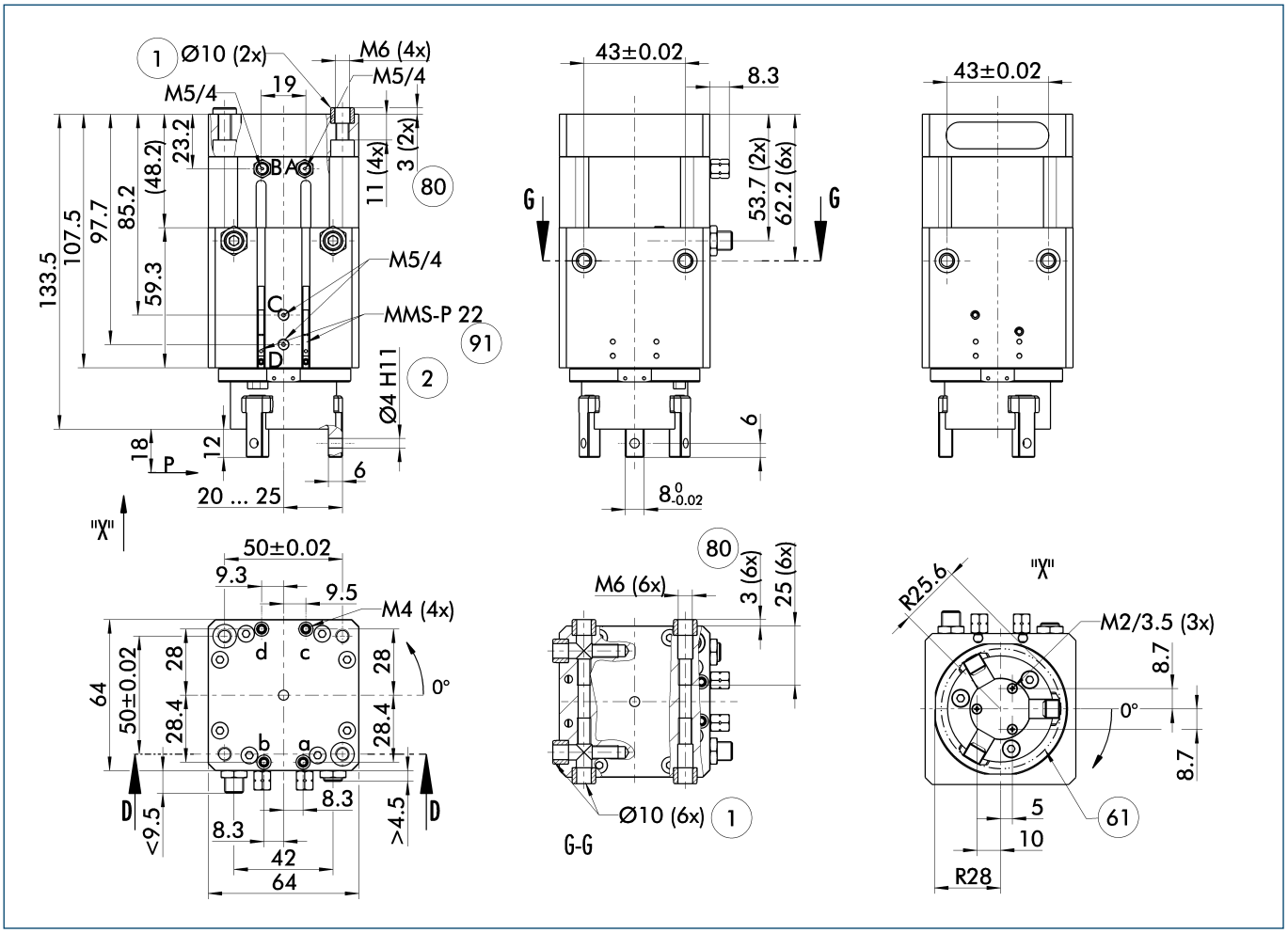


The drawing shows the gripper in the basic version with opened jaws without considering the dimensions of the described options below.

ⓘ The SDV-P pressure maintenance valve can also be used for I.D. or O.D. gripping alternatively or in addition to the spring-loaded, mechanical gripping force maintenance device (see "Accessories" catalog section).

A, a Main/direct connection, rotary actuator clockwise turning
B, b Main/direct connection, rotary actuator anti-clockwise turning
C, c Main/direct connection, gripper opening
D, d Main/direct connection, gripper closing

① Rotary actuator connection
② Finger connection
⑥① Interfering contour during swiveling
⑧⓪ Depth of the centering sleeve hole in the matching part
⑨① Monitoring of gripping and swiveling

## Hose-free direct connection

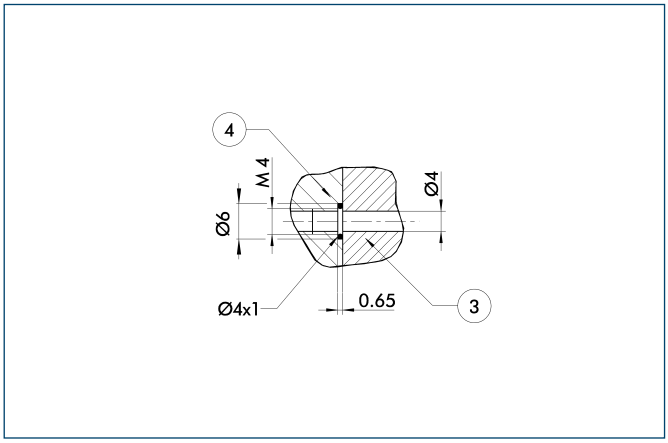


③ Adapter
④ Gripper swivel module

The direct connection is used for supplying compressed air without hoses. Instead, the pressure medium is fed through bore-holes in the mounting plate.

## AS/IS gripping force maintenance device

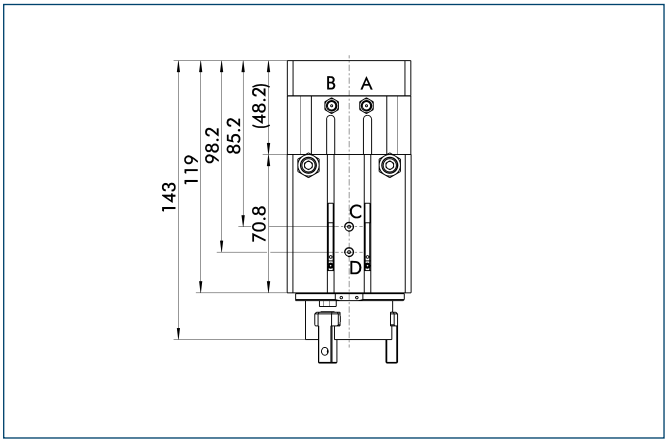


The mechanical gripping force maintenance device ensures a minimum gripping force even in case of pressure drop. This acts as closing force in the AS version, and as opening force in the IS version. In addition, the gripping force maintenance device can also be used for increasing the gripping force or for single-acting gripping.

## Version with shock absorbers

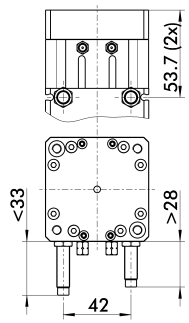


The drawing shows changes in dimensions of the shock absorber versions, compared to the elastomer versions shown on the main view.

## Stacked arrangement

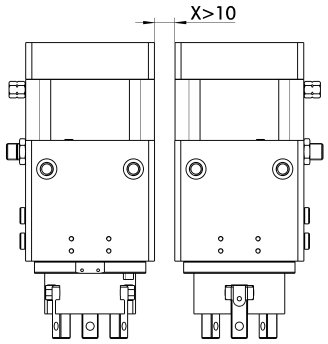


CAUTION: Monitoring is carried out by magnetic switches, and in case of side-by-side assembly of several units, a minimum distance of X mm between the units must be maintained.

## Finger blanks

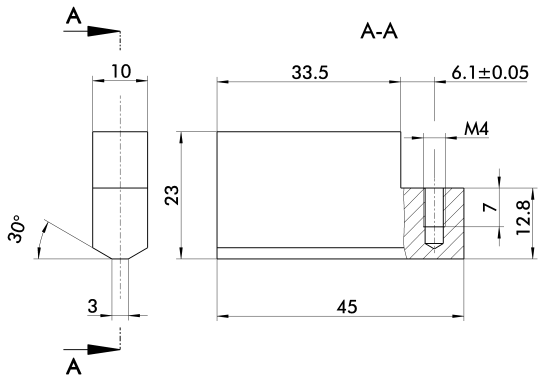


Finger blanks for customized subsequent machining

| Description | ID | Material | Scope of delivery |
|---|---|---|---|
| Finger blanks | | | |
| ABR 45 | **0340539** | Aluminum | 3 |

## Programmable magnetic switch

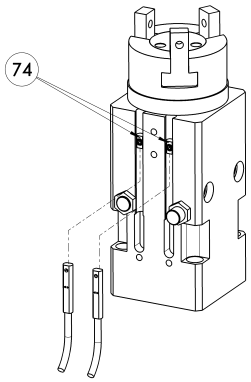


(74) Stop for MMS-P

Position monitoring with two programmable positions per sensor. The end position monitoring is mounted in the C-slot.

| Description | ID | Recommended product |
|---|---|---|
| Programmable magnetic switch | | |
| MMS-P 22-S-M8-PNP | **0301370** | • |
| MMSK-P 22-S-PNP | **0301371** | |
| Connection cables | | |
| KA BG08-L 4P-0500 | **0307767** | |
| KA BG08-L 4P-1000 | **0307768** | |
| KA BW08-L 4P-0500 | **0307765** | |
| KA BW08-L 4P-1000 | **0307766** | |
| Sensor Distributor | | |
| V2-M8-4P-2XM8-3P | **0301380** | |

ⓘ Please note the minimum permitted bending radii for the sensor cables, which are generally 35 mm.

ⓘ Per each GSM two sensors MMS-P are required. If standard extension cables (M8-3P) are used, the sensor distributor can be applied.


You can find more detailed information and individual parts of the above-mentioned accessories in the “Accessories” catalog section.

## Mounting kit for proximity switches – angle of rotation 90°

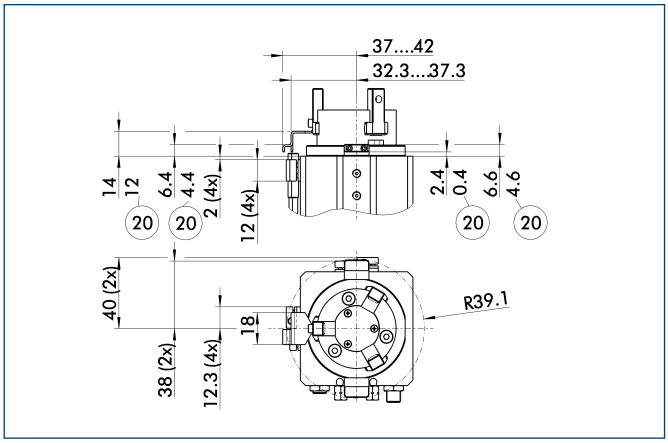


⑳ For AS / IS version

The mounting kits for the 90° and 180° GSM versions are identical, only the mounting is different. The mounting kit consists of two switch cams, two operating cams and small components. The proximity switches must be ordered separately.

| Description | ID |
|---|---|
| Mounting kit for proximity switch | |
| AS-GSM-Z 45 | **0304946** |

ⓘ This mounting kit needs to be ordered optionally as an accessory.

## Mounting kit for proximity switches – angle of rotation 180°

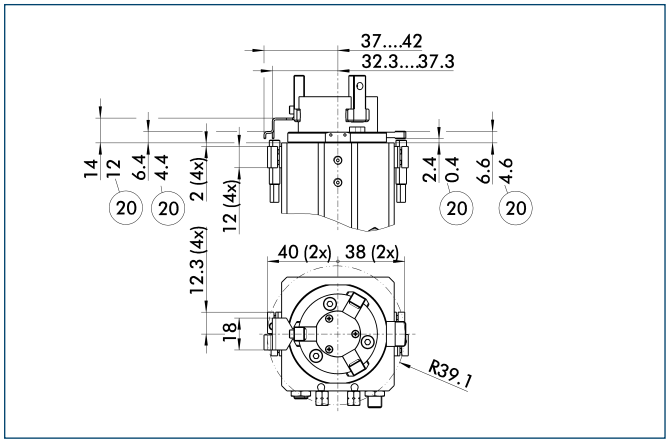


⑳ For AS / IS version

The mounting kits for the 90° and 180° GSM versions are identical, only the mounting is different. The mounting kit consists of two switch cams, two operating cams (only one needs to be fitted, see operating manual), four sensor brackets and small components. The proximity switches must be ordered separately.

| Description | ID |
|---|---|
| Mounting kit for proximity switch | |
| AS-GSM-Z 45 | **0304946** |

ⓘ This mounting kit needs to be ordered optionally as an accessory.

## Inductive proximity switches

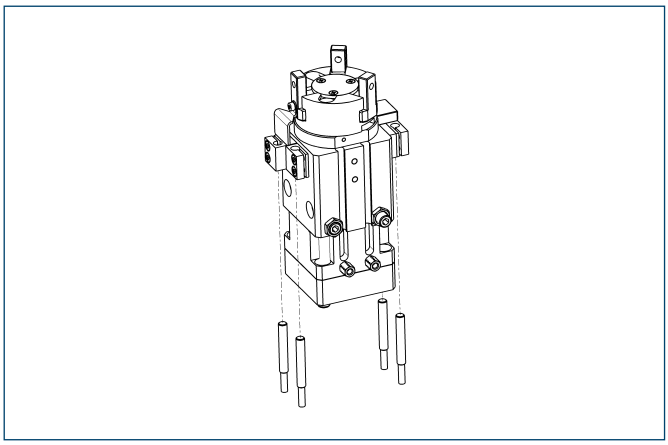

End position monitoring mounted with mounting kit

| Description | ID | Recommended product |
|---|---|---|
| Mounting kit for proximity switch | | |
| AS-GSM-Z 45 | **0304946** | |
| Inductive proximity switches | | |
| IN 40-S-M8 | **0301474** | • |
| IN 40-S-M12 | **0301574** | |
| INK 40-S | **0301555** | |

ⓘ Per each GSM four sensors (closer/NO) are required, optionally also an extension cable. The conditions of the swivelling or gripping processes are evaluated of the control unit by logic evaluation of the four sensor signals. If inductive proximity switches should be used, please take care that the switching positions cannot be adjusted.

ⓘ This mounting kit needs to be ordered optionally as an accessory.

ⓘ Please note the minimum permitted bending radii for the sensor cables, which are generally 35 mm.

You can find more detailed information and individual parts of the above-mentioned accessories in the “Accessories” catalog section.

# GSM-W



**Sizes**
16 ... 40

**Weight**
0.4 kg ... 1.73 kg

**Gripping moment**
1 Nm ... 11.2 Nm

**Angle per jaw**
20°

**Torque**
0.3 Nm ... 2.9 Nm

## Application example




Unit for selecting defective components and for spot checks of the current process.

1. GSM-W Gripper Swivel Module
2. Linear module LM

## Angular Gripper Swivel Module

compact rotary gripper combination, consisting of a powerful pneumatic rotary actuator, an end position and damping mechanism and an angular gripper

## Field of application

gripping and rotating combined in a single compact module, for automated assembly in places with a restricted amount of available space

## Your advantages and benefits

**Space-saving**
as the rotary drive, end-position damping unit and gripper are merged in one compact module

**Economical**
since adapter plates are not needed, there will be costs for project planning and engineering design

**Kinematics**
for high power transmission and synchronized gripping

**Process reliability**
as moving cables and hoses are replaced by integrated feed-throughs

**Comprehensive accessories**
through the use of existing gripper components




## General note to the series

**Principle of function**
Combined rotor and piston drive

**Housing material**
Aluminum alloy, hard-anodized

**Base jaw material**
Aluminum alloy, hard-anodized

**Actuation**
pneumatic, with filtered compressed air (10 microns): dry, lubricated or non-lubricated
Pressure medium: Required quality class of compressed air according to DIN ISO 8573-1: 6 4 4

**Warranty**
24 months (details, general terms and conditions and operation manuals can be downloaded under www.schunk.com)

**Scope of delivery**
Centering sleeves, O-rings for direct connection, screws for lateral fastening, steel balls for adjustment of the swiveling angle, assembly and operation manual with declaration of incorporation

**Gripping force maintenance device**
always integrated, also possible via SDV-P pressure maintenance valve

## Sectional diagram

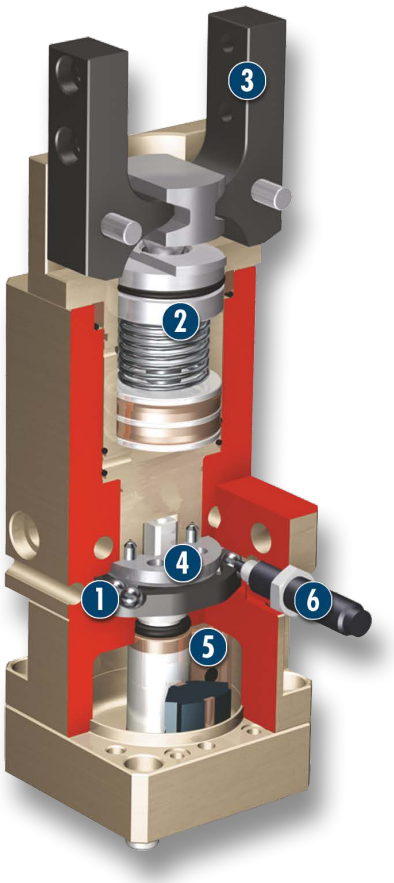


**1 Preset of rotating angle**
using steel balls for any desired angle of rotation

**2 Gripper drive**
via integrated pneumatic piston

**3 Base jaw**
for mounting the top fingers

**4 End-position damping assembly**
for end-position adjustment and damping

**5 Rotor**
as a compact, powerful drive

**6 Hydraulic shock absorber**
to increase the damping performance

## Functional description

As its rotor is actuated with pressure, the drive rotates the integrated gripping module. The module itself is driven by its own piston. The piston motion is subsequently transformed into a synchronized gripping motion.

## Options and special information

Despite the many options and versions already available as standard, SCHUNK also designs and produces customized versions on request.

## Accessories

Accessories from SCHUNK – the suitable supplement for maximum functionality, reliability and performance of all automation modules.

### Centering sleeves



### Fittings



### Programmable magnetic switch



### Sensor cables



### Plastic inserts





### Sensor Distributor

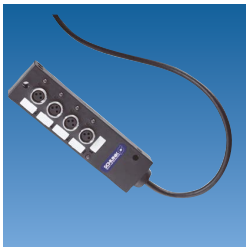

### Gripper pads

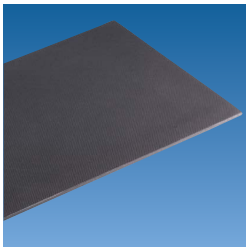

### Pressure maintenance valve



ⓘ For the exact size of the required accessories, availability of this size and the designation and ID, please refer to the additional views at the end of the size in question. You will find more detailed information on our accessory range in the “Accessories” catalog section.

## General note to the series

### Gripping moment

Gripping moment is the arithmetic total of gripping moments for each claw jaw.

### Finger length

The finger length is measured from the upper edge of the gripper housing in direction to the main axis. If the max. admissible finger length is exceeded, the speed of jaw motions have to be reduced and/or the opening angle has to be diminished, as it is done with heavy fingers. The service life of the gripper can shorten.

### Repeat accuracy

is defined as the spread of the limit position after 100 consecutive strokes.

### Workpiece weight

The recommended workpiece weight is calculated for a force-type connection with a coefficient of friction of 0.1 and a safety factor of 2 against slippage of the workpiece on acceleration due to gravity g. Considerably heavier workpiece weights are permitted with form-fit gripping.

### Closing and opening times, cycle times

Closing and opening times are purely the times that the base jaws or fingers are in motion. Cycle times are purely the times that the rotating part (mostly the pinion) is in motion. Valve switching times, hose filling times or PLC reaction times are not included in the above times and must be taken into consideration when determining cycle times.

### Middle attached load

The middle attached load should constitute a typical load. It is defined as the half of the max. possible mass moment of inertia that can be swiveled without restriction, bouncing or hitting, with a centric load and a vertical rotating axis.

# GSM-W 16





## Gripping force, O.D. gripping

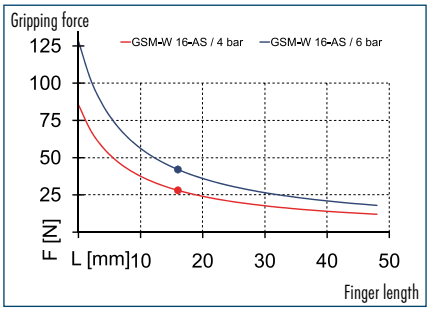


## Finger load

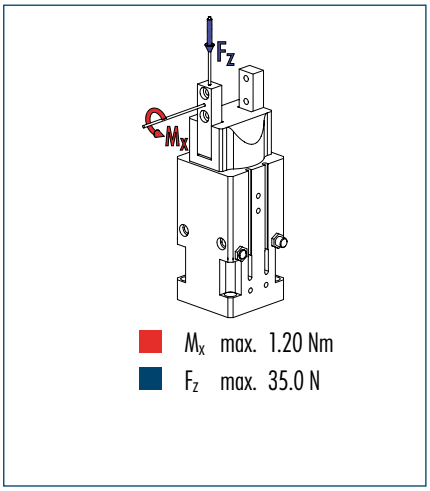


ⓘ The indicated moments and forces are statical values, apply for each base jaw and should not appear simultaneously. If the maximum admissible finger weight is exceeded, throttling is necessary in order to ensure a smooth jaw motion without jerks or bounces. The life-time may reduce.

## Technical data

| Description | | GSM-W 16-AS-E-090 | GSM-W 16-AS-S-090 |
|---|---|---|---|
| **ID** | | **0304637** | **0304737** |
| End position adjustability | [°] | 90 | 90 |
| Opening angle per jaw | [°] | 20 | 20 |
| Closed angle per jaw up to | [°] | 7 | 7 |
| Closing moment | [Nm] | 1 | 1 |
| Spring-actuated closing moment | [Nm] | 0.22 | 0.22 |
| Torque | [Nm] | 0.35 | 0.35 |
| Angle of rotation | [°] | 90 | 90 |
| Recommended workpiece weight | [kg] | 0.21 | 0.21 |
| Air consumption for gripping | [cm³] | 5.5 | 5.5 |
| Air consumption for swiveling | [cm³] | 9 | 9 |
| Weight | [kg] | 0.4 | 0.4 |
| Nominal operating pressure | [bar] | 6 | 6 |
| Max. operating pressure | [bar] | 6.5 | 6.5 |
| Minimum operating pressure for gripping | [bar] | 4 | 4 |
| Minimum operating pressure for swiveling | [bar] | 3.5 | 3.5 |
| Closing/opening time | [s] | 0.03/0.03 | 0.03/0.03 |
| Swiveling time with middle attached load | [s] | 0.12 | 0.12 |
| Max. permitted finger length | [mm] | 32 | 32 |
| Max. permitted weight per finger | [kg] | 0.04 | 0.04 |
| IP class | | 30 | 30 |
| Min./max. ambient temperature | [°C] | -10/90 | 5/60 |
| Repeat accuracy for gripping | [mm] | 0.02 | 0.02 |
| Repeat accuracy for swiveling | [°] | 0.1 | 0.1 |

### OPTIONS and their characteristics

| Description | | GSM-W 16-AS-E-180 | GSM-W 16-AS-S-180 |
|---|---|---|---|
| ID | | **0303837** | **0303937** |
| End position adjustability | [°] | 180 | 180 |
| Air consumption for swiveling | [cm³] | 15 | 15 |
| Swiveling time with middle attached load | [s] | 0.18 | 0.18 |

## Main view

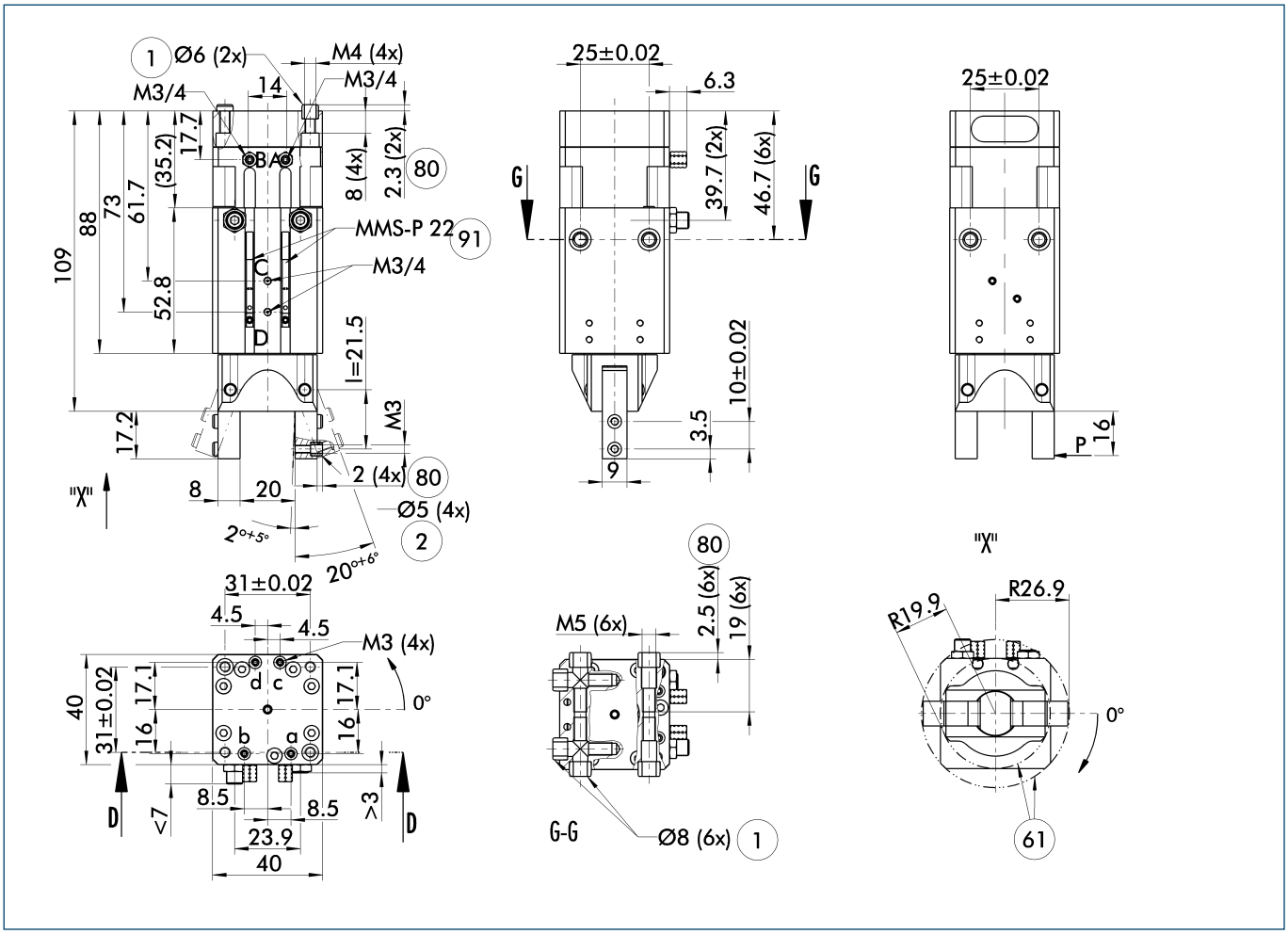


The drawing shows the gripper in the basic version with closed jaws, the dimensions do not include the options described below.

ⓘ The SDV-P pressure maintenance valve can also be used for I.D. or O.D. gripping alternatively or in addition to the spring-loaded, mechanical gripping force maintenance device (see "Accessories" catalog section).

A, a Main/direct connection, rotary actuator clockwise turning
B, b Main/direct connection, rotary actuator anti-clockwise turning
C, c Main/direct connection, gripper opening
D, d Main/direct connection, gripper closing

(1) Connection gripper-rotary actuator
(2) Finger connection
(61) Interfering contour during swiveling
(80) Depth of the centering sleeve hole in the matching part
(91) Monitoring of gripping and swiveling

## Hose-free direct connection

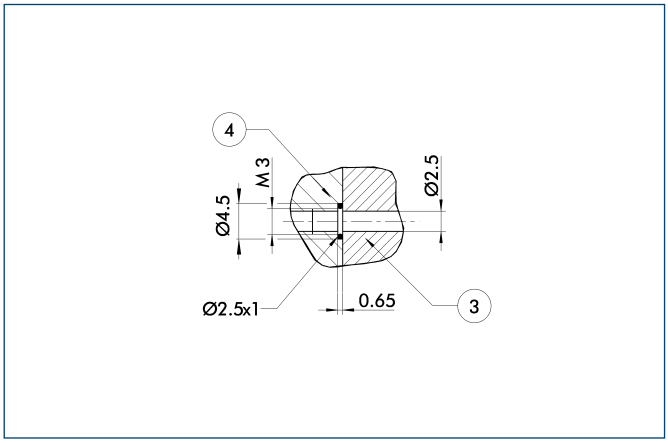


(3) Adapter
(4) Gripper swivel module

The direct connection is used for supplying compressed air without hoses. Instead, the pressure medium is fed through bore-holes in the mounting plate.

## Version with shock absorbers

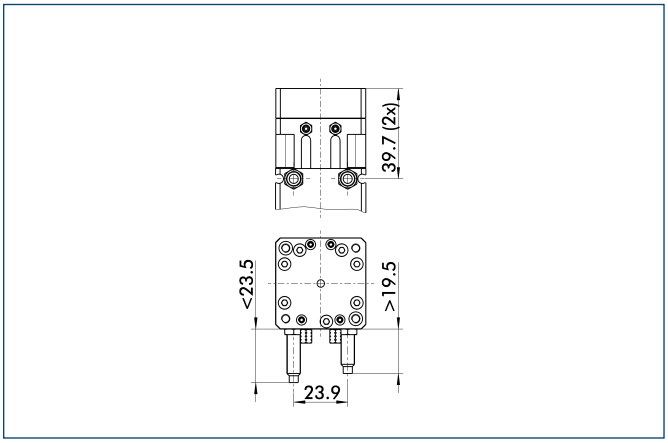


The drawing shows changes in dimensions of the shock absorber versions, compared to the elastomer versions shown on the main view.

## Stacked arrangement

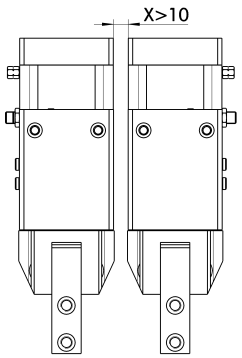


CAUTION: Monitoring is carried out by magnetic switches, and in case of side-by-side assembly of several units, a minimum distance of X mm between the units must be maintained.

## Programmable magnetic switch

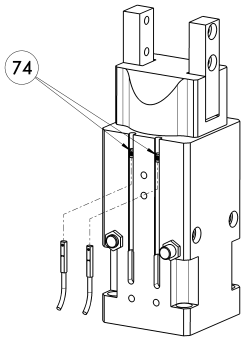


74 Stop for MMS-P

Position monitoring with two programmable positions per sensor. The end position monitoring is mounted in the C-slot.

| Description | ID | Recommended product |
|---|---|---|
| Programmable magnetic switch | | |
| MMS-P 22-S-M8-PNP | **0301370** | • |
| MMSK-P 22-S-PNP | **0301371** | |
| Connection cables | | |
| KA BG08-L 4P-0500 | **0307767** | |
| KA BG08-L 4P-1000 | **0307768** | |
| KA BW08-L 4P-0500 | **0307765** | |
| KA BW08-L 4P-1000 | **0307766** | |
| Sensor Distributor | | |
| V2-M8-4P-2XM8-3P | **0301380** | |

ⓘ Please note the minimum permitted bending radii for the sensor cables, which are generally 35 mm.

ⓘ Per each GSM two sensors MMS-P are required. If standard extension cables (M8-3P) are used, the sensor distributor can be applied.

You can find more detailed information and individual parts of the above-mentioned accessories in the “Accessories” catalog section.



# GSM-W 20





## Gripping force, O.D. gripping

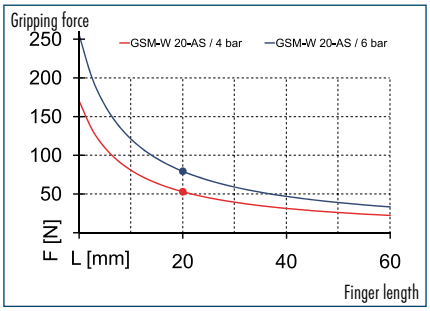


## Finger load

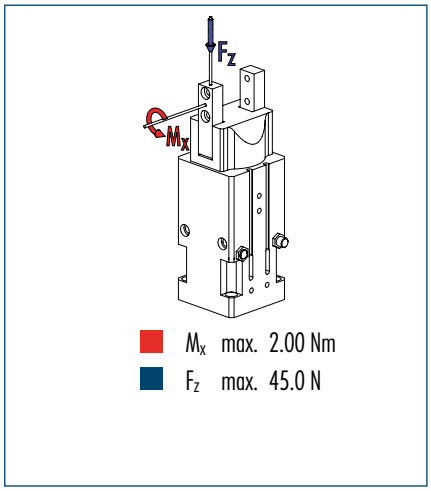


ⓘ The indicated moments and forces are statical values, apply for each base jaw and should not appear simultaneously. If the maximum admissible finger weight is exceeded, throttling is necessary in order to ensure a smooth jaw motion without jerks or bounces. The life-time may reduce.

## Technical data

| Description | | GSM-W 20-AS-E-090 | GSM-W 20-AS-S-090 |
|---|---|---|---|
| **ID** | | **0304647** | **0304747** |
| End position adjustability | [°] | 90 | 90 |
| Opening angle per jaw | [°] | 20 | 20 |
| Closed angle per jaw up to | [°] | 7 | 7 |
| Closing moment | [Nm] | 2.3 | 2.3 |
| Spring-actuated closing moment | [Nm] | 0.7 | 0.7 |
| Torque | [Nm] | 0.3 | 0.3 |
| Angle of rotation | [°] | 90 | 90 |
| Recommended workpiece weight | [kg] | 0.4 | 0.4 |
| Air consumption for gripping | [cm³] | 8.22 | 8.22 |
| Air consumption for swiveling | [cm³] | 9 | 9 |
| Weight | [kg] | 0.44 | 0.44 |
| Nominal operating pressure | [bar] | 6 | 6 |
| Max. operating pressure | [bar] | 6.5 | 6.5 |
| Minimum operating pressure for gripping | [bar] | 4 | 4 |
| Minimum operating pressure for swiveling | [bar] | 4 | 4 |
| Closing/opening time | [s] | 0.04/0.06 | 0.04/0.06 |
| Swiveling time with middle attached load | [s] | 0.14 | 0.14 |
| Max. permitted finger length | [mm] | 40 | 40 |
| Max. permitted weight per finger | [kg] | 0.07 | 0.07 |
| IP class | | 30 | 30 |
| Min./max. ambient temperature | [°C] | -10/90 | 5/60 |
| Repeat accuracy for gripping | [mm] | 0.02 | 0.02 |
| Repeat accuracy for swiveling | [°] | 0.1 | 0.1 |

### OPTIONS and their characteristics

| Description | | GSM-W 20-AS-E-180 | GSM-W 20-AS-S-180 |
|---|---|---|---|
| ID | | **0303847** | **0303947** |
| End position adjustability | [°] | 180 | 180 |
| Air consumption for swiveling | [cm³] | 15 | 15 |
| Swiveling time with middle attached load | [s] | 0.22 | 0.22 |

## Main view

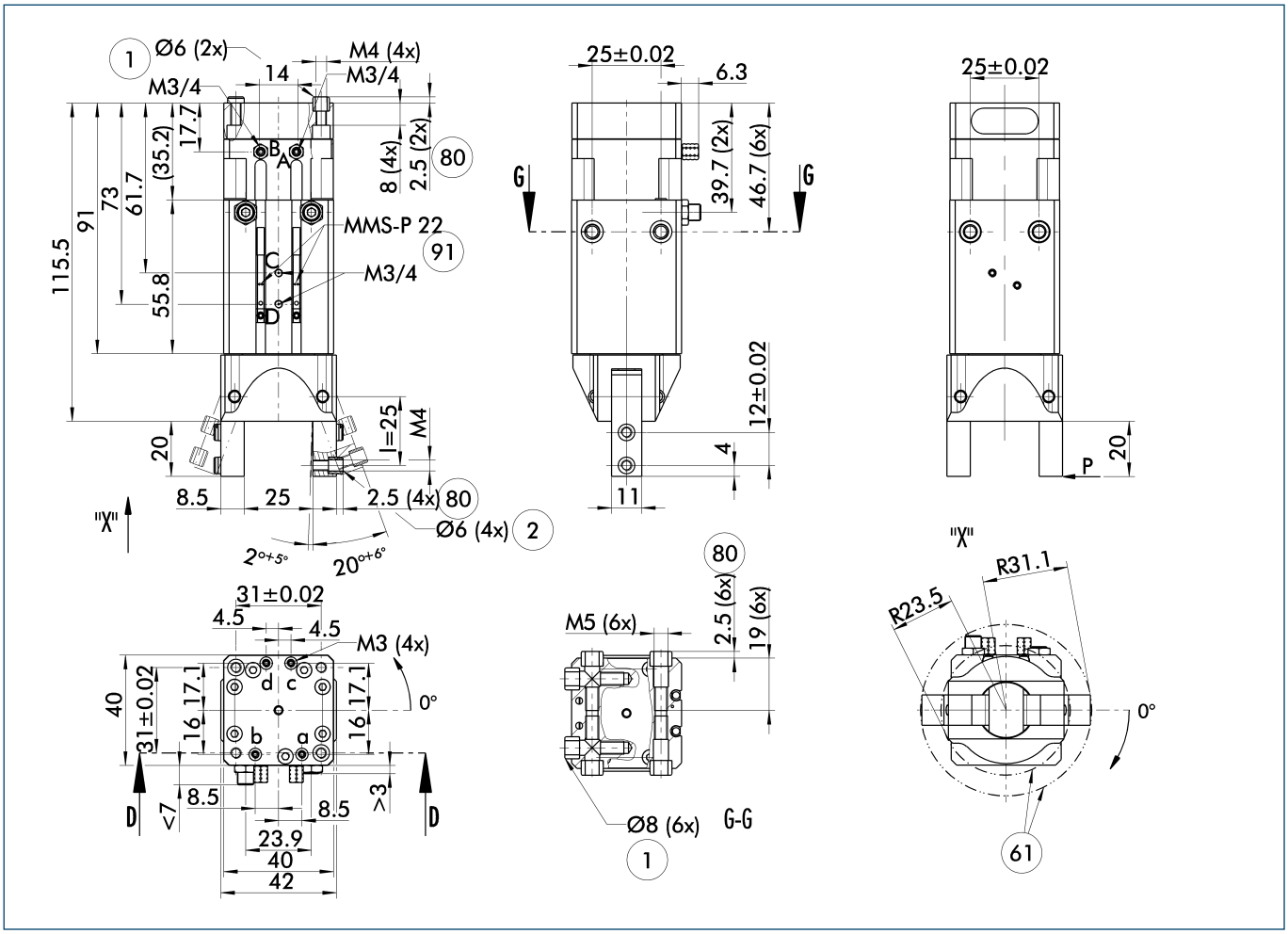


The drawing shows the gripper in the basic version with closed jaws, the dimensions do not include the options described below.

ⓘ The SDV-P pressure maintenance valve can also be used for I.D. or O.D. gripping alternatively or in addition to the spring-loaded, mechanical gripping force maintenance device (see "Accessories" catalog section).

A, a Main/direct connection, rotary actuator clockwise turning
B, b Main/direct connection, rotary actuator anti-clockwise turning
C, c Main/direct connection, gripper opening
D, d Main/direct connection, gripper closing

(1) Connection gripper-rotary actuator
(2) Finger connection
(61) Interfering contour during swiveling
(80) Depth of the centering sleeve hole in the matching part
(91) Monitoring of gripping and swiveling

## Hose-free direct connection

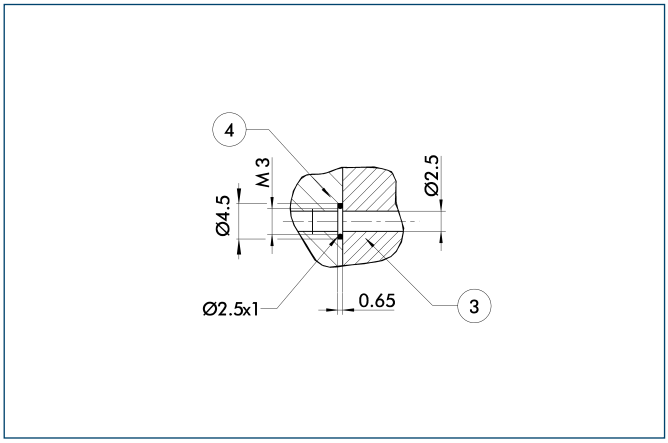


(3) Adapter
(4) Gripper swivel module

The direct connection is used for supplying compressed air without hoses. Instead, the pressure medium is fed through bore-holes in the mounting plate.

## Version with shock absorbers

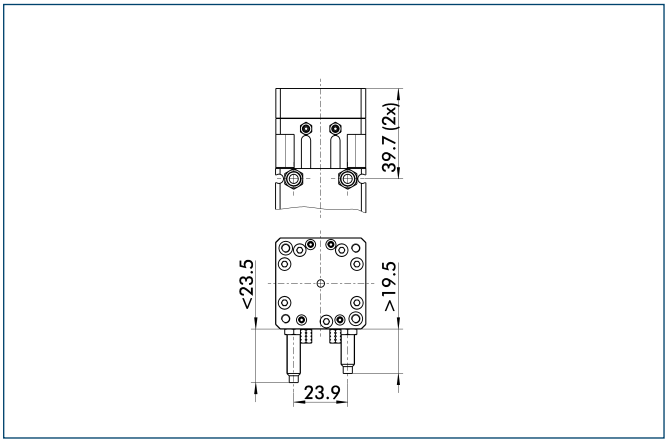


The drawing shows changes in dimensions of the shock absorber versions, compared to the elastomer versions shown on the main view.

## Stacked arrangement

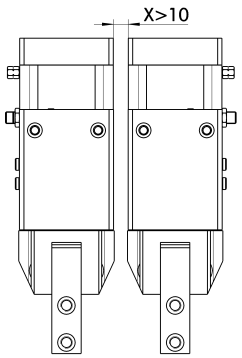


CAUTION: Monitoring is carried out by magnetic switches, and in case of side-by-side assembly of several units, a minimum distance of X mm between the units must be maintained.

## Programmable magnetic switch

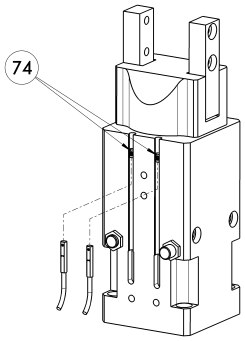


74 Stop for MMS-P

Position monitoring with two programmable positions per sensor. The end position monitoring is mounted in the C-slot.

| Description | ID | Recommended product |
|---|---|---|
| Programmable magnetic switch | | |
| MMS-P 22-S-M8-PNP | **0301370** | • |
| MMSK-P 22-S-PNP | **0301371** | |
| Connection cables | | |
| KA BG08-L 4P-0500 | **0307767** | |
| KA BG08-L 4P-1000 | **0307768** | |
| KA BW08-L 4P-0500 | **0307765** | |
| KA BW08-L 4P-1000 | **0307766** | |
| Sensor Distributor | | |
| V2-M8-4P-2XM8-3P | **0301380** | |

ⓘ Please note the minimum permitted bending radii for the sensor cables, which are generally 35 mm.

ⓘ Per each GSM two sensors MMS-P are required. If standard extension cables (M8-3P) are used, the sensor distributor can be applied.

You can find more detailed information and individual parts of the above-mentioned accessories in the “Accessories” catalog section.



# GSM-W 25





## Gripping force, O.D. gripping

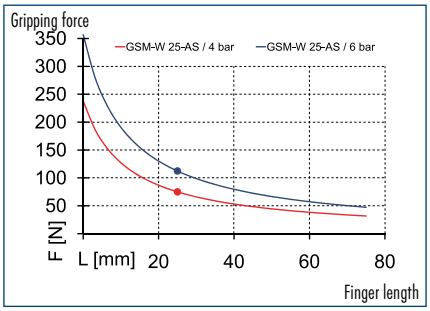


## Finger load

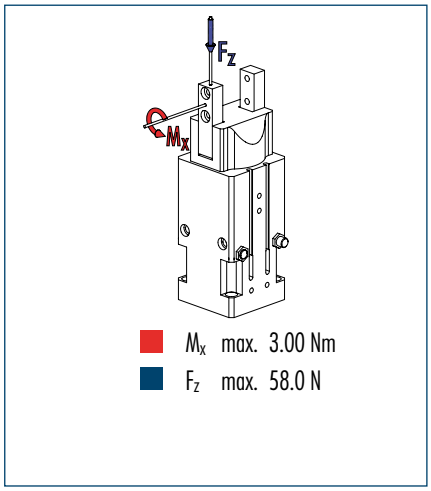


ⓘ The indicated moments and forces are statical values, apply for each base jaw and should not appear simultaneously. If the maximum admissible finger weight is exceeded, throttling is necessary in order to ensure a smooth jaw motion without jerks or bounces. The life-time may reduce.

## Technical data

| Description | | GSM-W 25-AS-E-090 | GSM-W 25-AS-S-090 |
|---|---|---|---|
| **ID** | | **0304657** | **0304757** |
| End position adjustability | [°] | 90 | 90 |
| Opening angle per jaw | [°] | 20 | 20 |
| Closed angle per jaw up to | [°] | 7 | 7 |
| Closing moment | [Nm] | 4.1 | 4.1 |
| Spring-actuated closing moment | [Nm] | 0.9 | 0.9 |
| Torque | [Nm] | 2.9 | 2.9 |
| Angle of rotation | [°] | 90 | 90 |
| Recommended workpiece weight | [kg] | 0.55 | 0.55 |
| Air consumption for gripping | [cm³] | 16.53 | 16.53 |
| Air consumption for swiveling | [cm³] | 51 | 51 |
| Weight | [kg] | 1.32 | 1.32 |
| Nominal operating pressure | [bar] | 6 | 6 |
| Max. operating pressure | [bar] | 6.5 | 6.5 |
| Minimum operating pressure for gripping | [bar] | 4 | 4 |
| Minimum operating pressure for swiveling | [bar] | 3 | 3 |
| Closing/opening time | [s] | 0.04/0.06 | 0.04/0.06 |
| Swiveling time with middle attached load | [s] | 0.14 | 0.14 |
| Max. permitted finger length | [mm] | 50 | 50 |
| Max. permitted weight per finger | [kg] | 0.1 | 0.1 |
| IP class | | 30 | 30 |
| Min./max. ambient temperature | [°C] | -10/90 | 5/60 |
| Repeat accuracy for gripping | [mm] | 0.02 | 0.02 |
| Repeat accuracy for swiveling | [°] | 0.1 | 0.1 |

### OPTIONS and their characteristics

| Description | | GSM-W 25-AS-E-180 | GSM-W 25-AS-S-180 |
|---|---|---|---|
| ID | | **0303857** | **0303957** |
| End position adjustability | [°] | 180 | 180 |
| Air consumption for swiveling | [cm³] | 85 | 85 |
| Swiveling time with middle attached load | [s] | 0.24 | 0.24 |

## Main view

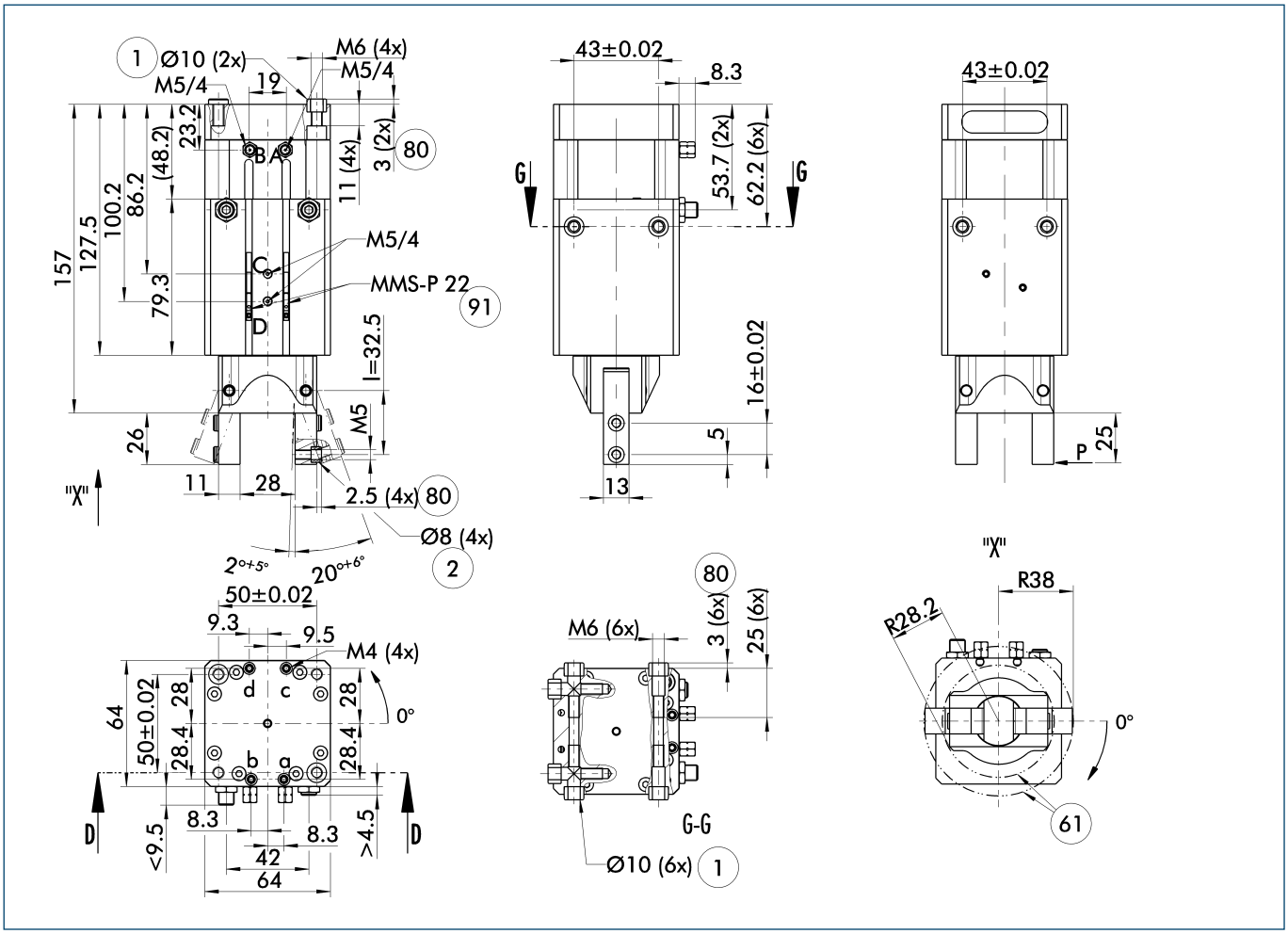


The drawing shows the gripper in the basic version with closed jaws, the dimensions do not include the options described below.

ⓘ The SDV-P pressure maintenance valve can also be used for I.D. or O.D. gripping alternatively or in addition to the spring-loaded, mechanical gripping force maintenance device (see "Accessories" catalog section).

A, a Main/direct connection, rotary actuator clockwise turning
B, b Main/direct connection, rotary actuator anti-clockwise turning
C, c Main/direct connection, gripper opening
D, d Main/direct connection, gripper closing

(1) Connection gripper-rotary actuator
(2) Finger connection
(61) Interfering contour during swiveling
(80) Depth of the centering sleeve hole in the matching part
(91) Monitoring of gripping and swiveling

## Hose-free direct connection

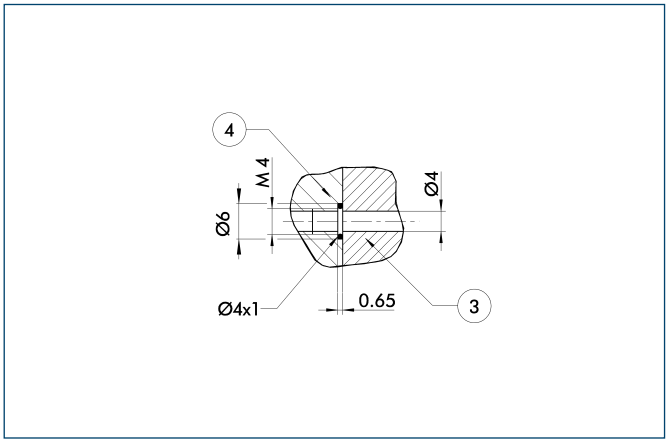


(3) Adapter
(4) Gripper swivel module

The direct connection is used for supplying compressed air without hoses. Instead, the pressure medium is fed through bore-holes in the mounting plate.

## Version with shock absorbers

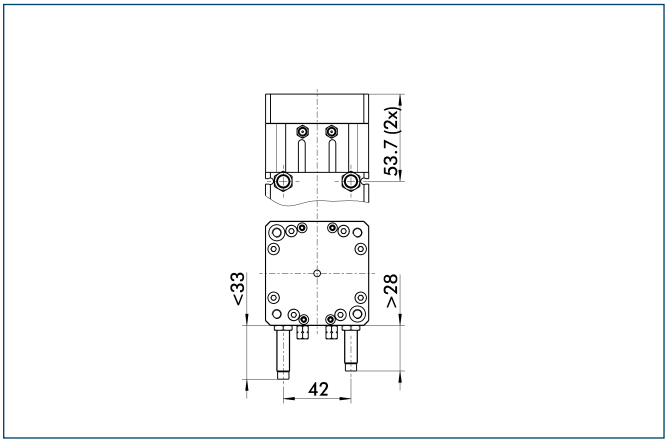


The drawing shows changes in dimensions of the shock absorber versions, compared to the elastomer versions shown on the main view.

## Stacked arrangement

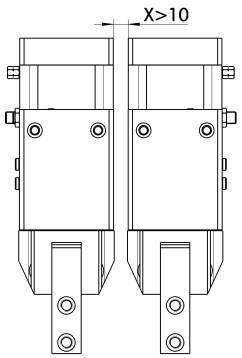


CAUTION: Monitoring is carried out by magnetic switches, and in case of side-by-side assembly of several units, a minimum distance of X mm between the units must be maintained.

## Programmable magnetic switch

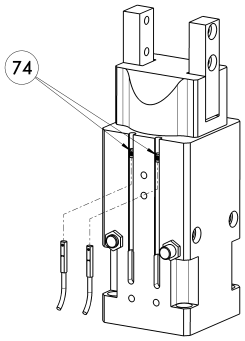


(74) Stop for MMS-P

Position monitoring with two programmable positions per sensor. The end position monitoring is mounted in the C-slot.

| Description | ID | Recommended product |
|---|---|---|
| Programmable magnetic switch | | |
| MMS-P 22-S-M8-PNP | **0301370** | • |
| MMSK-P 22-S-PNP | **0301371** | |
| Connection cables | | |
| KA BG08-L 4P-0500 | **0307767** | |
| KA BG08-L 4P-1000 | **0307768** | |
| KA BW08-L 4P-0500 | **0307765** | |
| KA BW08-L 4P-1000 | **0307766** | |
| Sensor Distributor | | |
| V2-M8-4P-2XM8-3P | **0301380** | |

ⓘ Please note the minimum permitted bending radii for the sensor cables, which are generally 35 mm.

ⓘ Per each GSM two sensors MMS-P are required. If standard extension cables (M8-3P) are used, the sensor distributor can be applied.

You can find more detailed information and individual parts of the above-mentioned accessories in the “Accessories” catalog section.

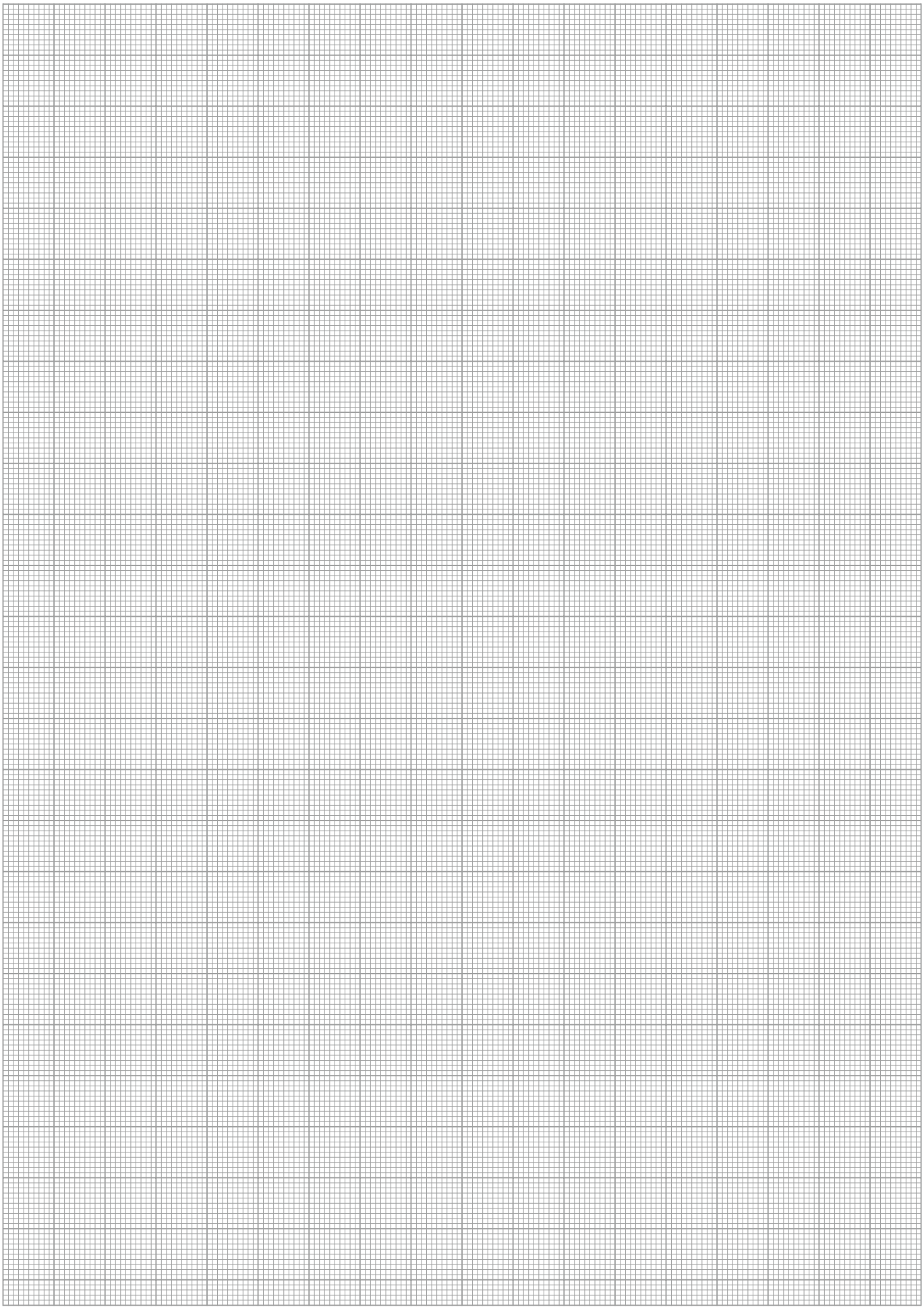

# GSM-W 32





## Gripping force, O.D. gripping

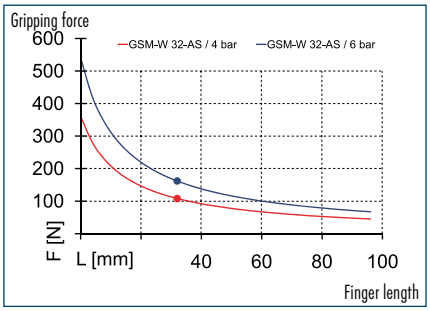


## Finger load

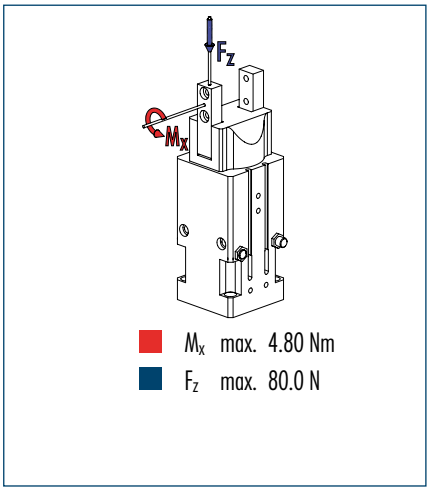


ⓘ The indicated moments and forces are statical values, apply for each base jaw and should not appear simultaneously. If the maximum admissible finger weight is exceeded, throttling is necessary in order to ensure a smooth jaw motion without jerks or bounces. The life-time may reduce.

## Technical data

| Description | | GSM-W 32-AS-E-090 | GSM-W 32-AS-S-090 |
|---|---|---|---|
| ID | | 0304677 | 0304777 |
| End position adjustability | [°] | 90 | 90 |
| Opening angle per jaw | [°] | 20 | 20 |
| Closed angle per jaw up to | [°] | 7 | 7 |
| Closing moment | [Nm] | 7.4 | 7.4 |
| Spring-actuated closing moment | [Nm] | 1.8 | 1.8 |
| Torque | [Nm] | 2.7 | 2.7 |
| Angle of rotation | [°] | 90 | 90 |
| Recommended workpiece weight | [kg] | 0.84 | 0.84 |
| Air consumption for gripping | [cm³] | 25.56 | 25.56 |
| Air consumption for swiveling | [cm³] | 51 | 51 |
| Weight | [kg] | 1.44 | 1.44 |
| Nominal operating pressure | [bar] | 6 | 6 |
| Max. operating pressure | [bar] | 6.5 | 6.5 |
| Minimum operating pressure for gripping | [bar] | 4 | 4 |
| Minimum operating pressure for swiveling | [bar] | 3 | 3 |
| Closing/opening time | [s] | 0.05/0.07 | 0.05/0.07 |
| Swiveling time with middle attached load | [s] | 0.14 | 0.14 |
| Max. permitted finger length | [mm] | 64 | 64 |
| Max. permitted weight per finger | [kg] | 0.15 | 0.15 |
| IP class | | 30 | 30 |
| Min./max. ambient temperature | [°C] | -10/90 | 5/60 |
| Repeat accuracy for gripping | [mm] | 0.02 | 0.02 |
| Repeat accuracy for swiveling | [°] | 0.1 | 0.1 |

### OPTIONS and their characteristics

| Description | | GSM-W 32-AS-E-180 | GSM-W 32-AS-S-180 |
|---|---|---|---|
| ID | | 0303877 | 0303977 |
| End position adjustability | [°] | 180 | 180 |
| Air consumption for swiveling | [cm³] | 85 | 85 |
| Swiveling time with middle attached load | [s] | 0.24 | 0.24 |

## Main view

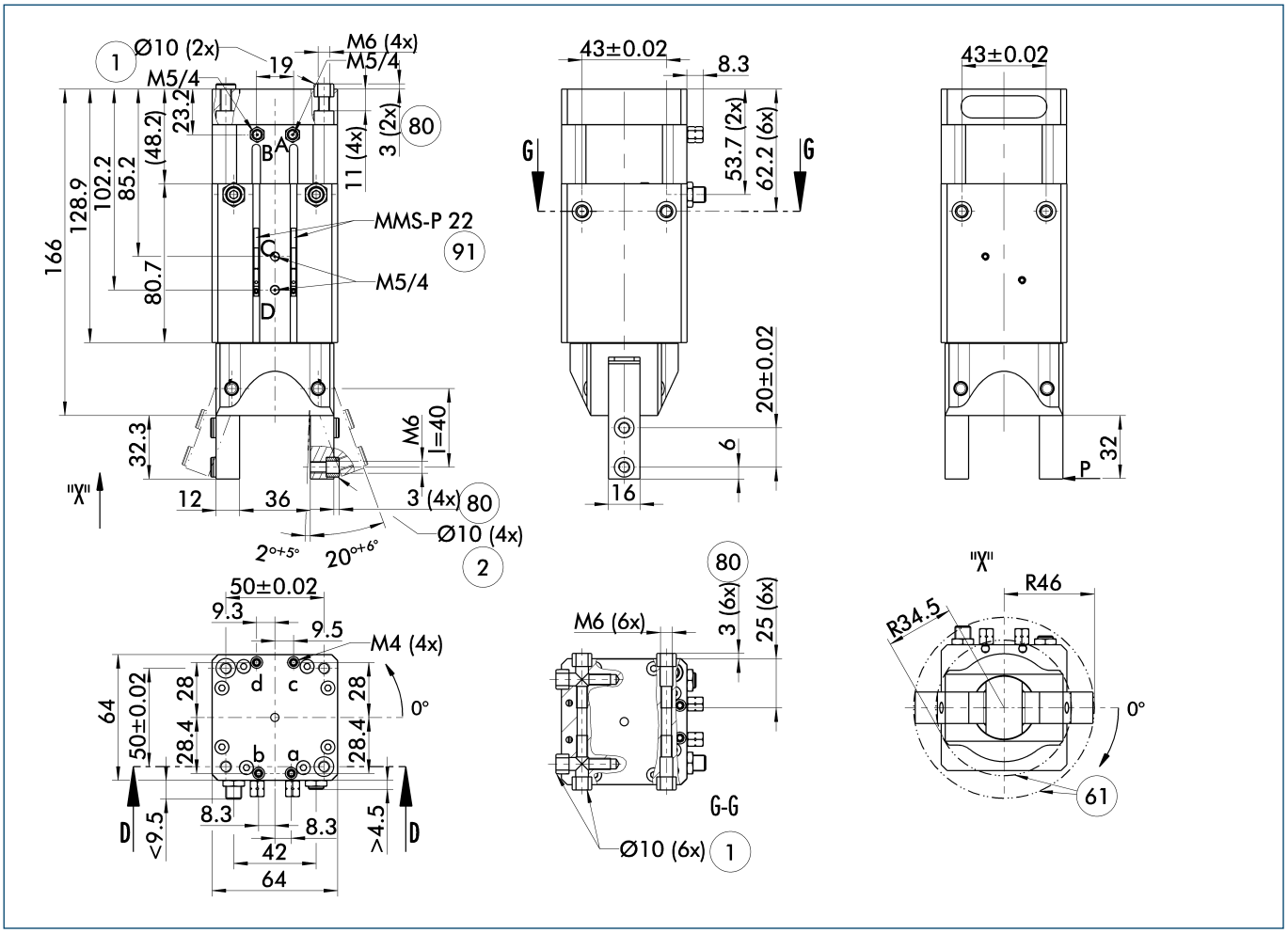


The drawing shows the gripper in the basic version with closed jaws, the dimensions do not include the options described below.

ⓘ The SDV-P pressure maintenance valve can also be used for I.D. or O.D. gripping alternatively or in addition to the spring-loaded, mechanical gripping force maintenance device (see "Accessories" catalog section).

A, a Main/direct connection, rotary actuator clockwise turning
B, b Main/direct connection, rotary actuator anti-clockwise turning
C, c Main/direct connection, gripper opening
D, d Main/direct connection, gripper closing

(1) Connection gripper-rotary actuator
(2) Finger connection
(61) Interfering contour during swiveling
(80) Depth of the centering sleeve hole in the matching part
(91) Monitoring of gripping and swiveling

## Hose-free direct connection

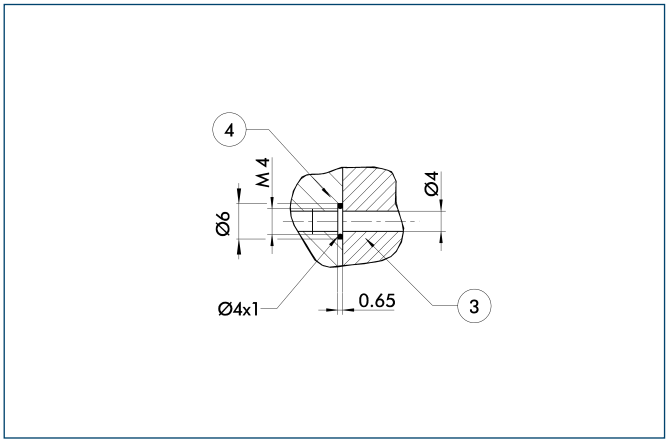


(3) Adapter
(4) Gripper swivel module

The direct connection is used for supplying compressed air without hoses. Instead, the pressure medium is fed through bore-holes in the mounting plate.

## Version with shock absorbers

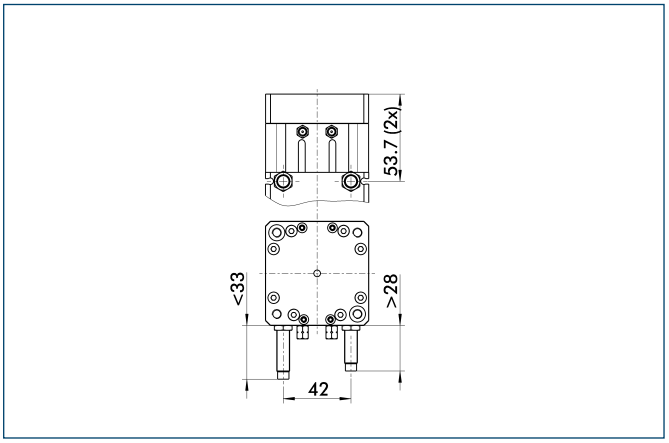


The drawing shows changes in dimensions of the shock absorber versions, compared to the elastomer versions shown on the main view.

## Stacked arrangement

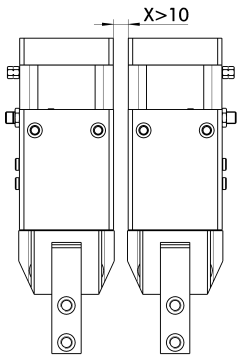


CAUTION: Monitoring is carried out by magnetic switches, and in case of side-by-side assembly of several units, a minimum distance of X mm between the units must be maintained.

## Programmable magnetic switch

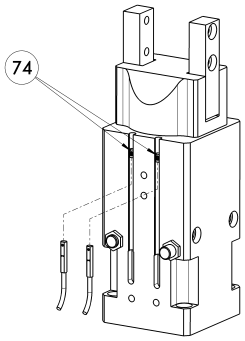


74 Stop for MMS-P

Position monitoring with two programmable positions per sensor. The end position monitoring is mounted in the C-slot.

| Description | ID | Recommended product |
|---|---|---|
| Programmable magnetic switch | | |
| MMS-P 22-S-M8-PNP | **0301370** | • |
| MMSK-P 22-S-PNP | **0301371** | |
| Connection cables | | |
| KA BG08-L 4P-0500 | **0307767** | |
| KA BG08-L 4P-1000 | **0307768** | |
| KA BW08-L 4P-0500 | **0307765** | |
| KA BW08-L 4P-1000 | **0307766** | |
| Sensor Distributor | | |
| V2-M8-4P-2XM8-3P | **0301380** | |

ⓘ Please note the minimum permitted bending radii for the sensor cables, which are generally 35 mm.

ⓘ Per each GSM two sensors MMS-P are required. If standard extension cables (M8-3P) are used, the sensor distributor can be applied.

You can find more detailed information and individual parts of the above-mentioned accessories in the “Accessories” catalog section.

# GSM-W 40





## Gripping force, O.D. gripping

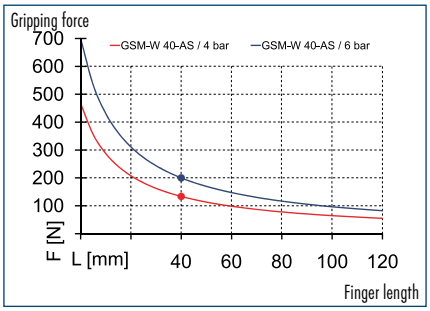


## Finger load

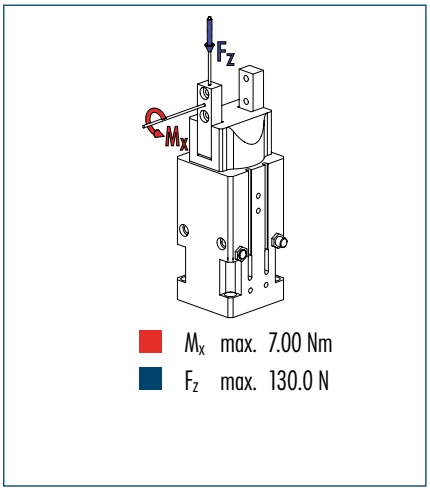


ⓘ The indicated moments and forces are statical values, apply for each base jaw and should not appear simultaneously. If the maximum admissible finger weight is exceeded, throttling is necessary in order to ensure a smooth jaw motion without jerks or bounces. The life-time may reduce.

## Technical data

| Description | | GSM-W 40-AS-E-090 | GSM-W 40-AS-S-090 |
|---|---|---|---|
| **ID** | | **0304687** | **0304787** |
| End position adjustability | [°] | 90 | 90 |
| Opening angle per jaw | [°] | 20 | 20 |
| Closed angle per jaw up to | [°] | 7 | 7 |
| Closing moment | [Nm] | 11.2 | 11.2 |
| Spring-actuated closing moment | [Nm] | 2.6 | 2.6 |
| Torque | [Nm] | 2.6 | 2.6 |
| Angle of rotation | [°] | 90 | 90 |
| Recommended workpiece weight | [kg] | 1 | 1 |
| Air consumption for gripping | [cm³] | 48.04 | 48.04 |
| Air consumption for swiveling | [cm³] | 51 | 51 |
| Weight | [kg] | 1.73 | 1.73 |
| Nominal operating pressure | [bar] | 6 | 6 |
| Max. operating pressure | [bar] | 6.5 | 6.5 |
| Minimum operating pressure for gripping | [bar] | 4 | 4 |
| Minimum operating pressure for swiveling | [bar] | 3 | 3 |
| Closing/opening time | [s] | 0.07/0.1 | 0.07/0.1 |
| Swiveling time with middle attached load | [s] | 0.14 | 0.14 |
| Max. permitted finger length | [mm] | 80 | 80 |
| Max. permitted weight per finger | [kg] | 0.25 | 0.25 |
| IP class | | 30 | 30 |
| Min./max. ambient temperature | [°C] | -10/90 | 5/60 |
| Repeat accuracy for gripping | [mm] | 0.02 | 0.02 |
| Repeat accuracy for swiveling | [°] | 0.1 | 0.1 |

### OPTIONS and their characteristics

| Description | | GSM-W 40-AS-E-180 | GSM-W 40-AS-S-180 |
|---|---|---|---|
| ID | | **0303887** | **0303987** |
| End position adjustability | [°] | 180 | 180 |
| Air consumption for swiveling | [cm³] | 85 | 85 |
| Swiveling time with middle attached load | [s] | 0.24 | 0.24 |

## Main view

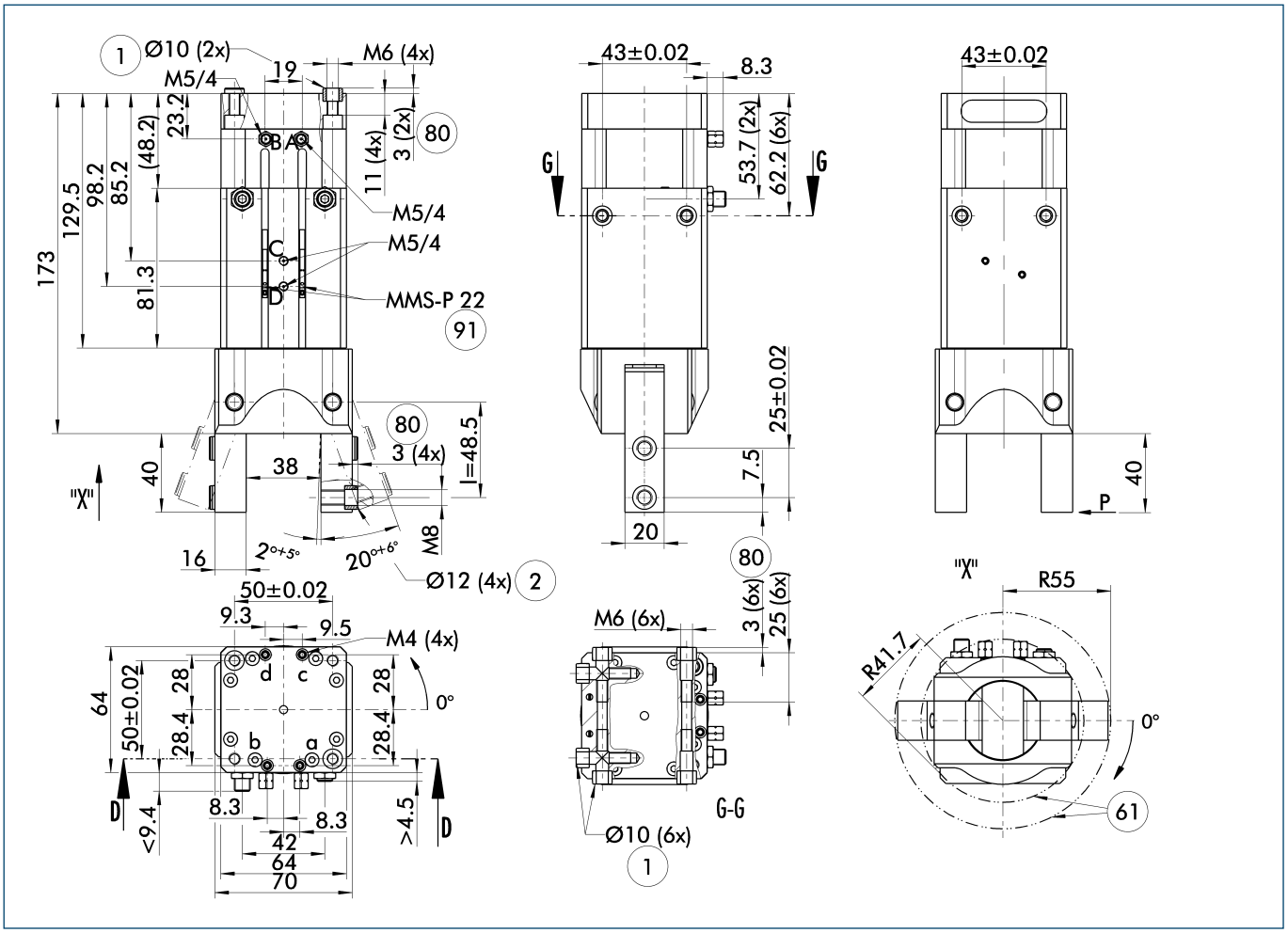


The drawing shows the gripper in the basic version with closed jaws, the dimensions do not include the options described below.

ⓘ The SDV-P pressure maintenance valve can also be used for I.D. or O.D. gripping alternatively or in addition to the spring-loaded, mechanical gripping force maintenance device (see "Accessories" catalog section).

A, a Main/direct connection, rotary actuator clockwise turning
B, b Main/direct connection, rotary actuator anti-clockwise turning
C, c Main/direct connection, gripper opening
D, d Main/direct connection, gripper closing

(1) Connection gripper-rotary actuator
(2) Finger connection
(61) Interfering contour during swiveling
(80) Depth of the centering sleeve hole in the matching part
(91) Monitoring of gripping and swiveling

## Hose-free direct connection

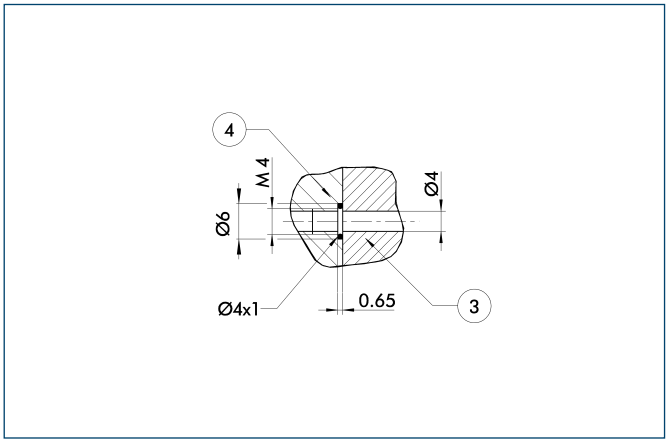


(3) Adapter
(4) Gripper swivel module

The direct connection is used for supplying compressed air without hoses. Instead, the pressure medium is fed through bore-holes in the mounting plate.

## Version with shock absorbers

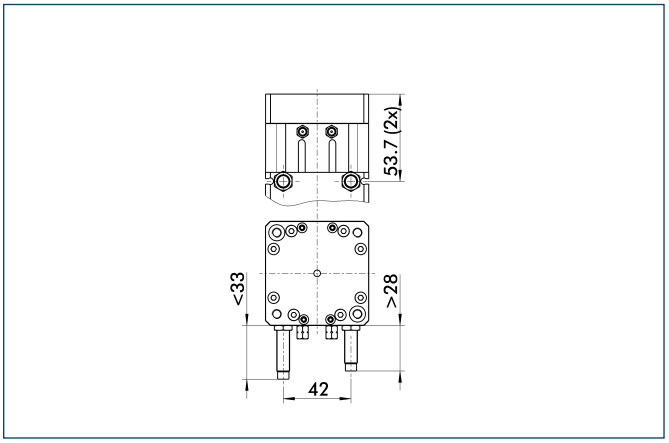


The drawing shows changes in dimensions of the shock absorber versions, compared to the elastomer versions shown on the main view.

## Stacked arrangement

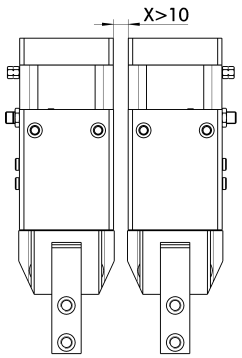


CAUTION: Monitoring is carried out by magnetic switches, and in case of side-by-side assembly of several units, a minimum distance of X mm between the units must be maintained.

## Programmable magnetic switch

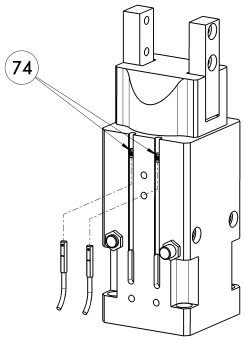


74 Stop for MMS-P

Position monitoring with two programmable positions per sensor. The end position monitoring is mounted in the C-slot.

| Description | ID | Recommended product |
|---|---|---|
| Programmable magnetic switch | | |
| MMS-P 22-S-M8-PNP | **0301370** | • |
| MMSK-P 22-S-PNP | **0301371** | |
| Connection cables | | |
| KA BG08-L 4P-0500 | **0307767** | |
| KA BG08-L 4P-1000 | **0307768** | |
| KA BW08-L 4P-0500 | **0307765** | |
| KA BW08-L 4P-1000 | **0307766** | |
| Sensor Distributor | | |
| V2-M8-4P-2XM8-3P | **0301380** | |

ⓘ Please note the minimum permitted bending radii for the sensor cables, which are generally 35 mm.

ⓘ Per each GSM two sensors MMS-P are required. If standard extension cables (M8-3P) are used, the sensor distributor can be applied.

You can find more detailed information and individual parts of the above-mentioned accessories in the “Accessories” catalog section.



**Sizes**
16 ... 40

**Weight**
0.49 kg ... 2.19 kg

**Gripping moment**
0.9 Nm ... 15 Nm

**Angle per jaw**
90°

**Torque**
0.3 Nm ... 2.9 Nm

## Application example

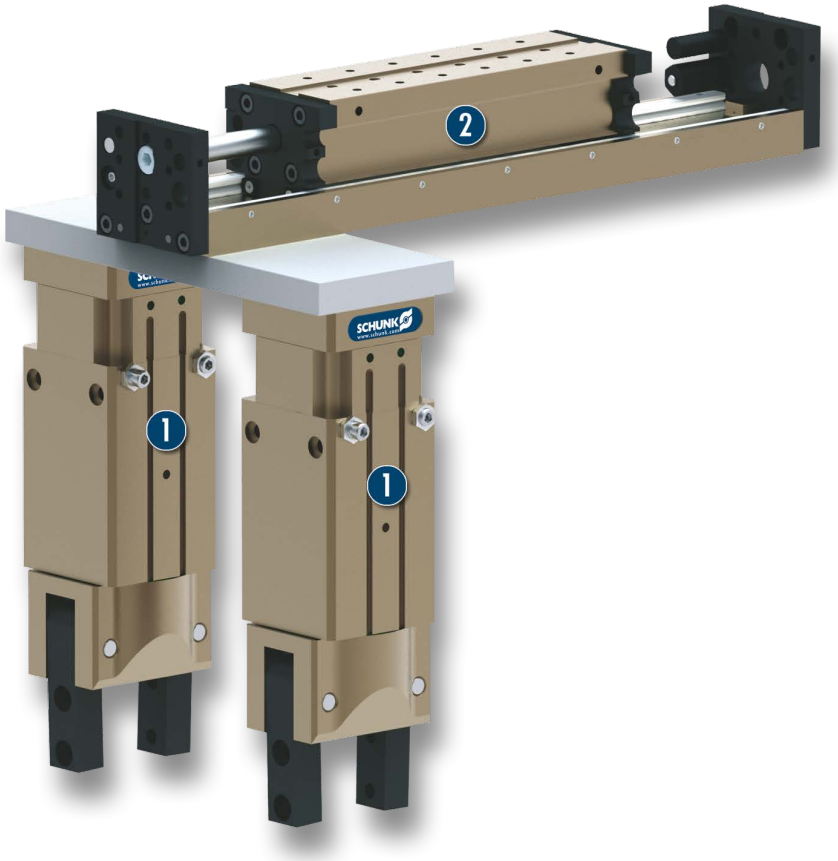


**Double converter for simultaneous conversion of two workpieces on a separate workpiece carrier.**

1. GSM-R Gripper Swivel Module
2. Linear module LM

## Radial Gripper Swivel Module

compact rotary gripper combination, consisting of a powerful pneumatic rotary actuator, an end position and damping mechanism and a radial gripper

## Field of application

gripping and rotating combined in a single compact module, for automated assembly in places with a restricted amount of available space

## Your advantages and benefits

**Space-saving**
as the rotary drive, end-position damping unit and gripper are merged in one compact module

**Economical**
since adapter plates are not needed, there will be costs for project planning and engineering design

**Roller guide**
for precise gripping through base jaw guidance with minimum play

**Process reliability**
as moving cables and hoses are replaced by integrated feed-throughs

**Comprehensive accessories**
through the use of existing gripper components




## General note to the series

**Principle of function**
double-acting, guided kinematics

**Housing material**
Aluminum alloy, hard-anodized

**Base jaw material**
Steel

**Actuation**
pneumatic, with filtered compressed air (10 microns): dry, lubricated or non-lubricated
Pressure medium: Required quality class of compressed air according to DIN ISO 8573-1: 6 4 4

**Warranty**
24 months (details, general terms and conditions and operation manuals can be downloaded under www.schunk.com)

**Scope of delivery**
Centering sleeves, O-rings for direct connection, screws for lateral fastening, steel balls for adjustment of the swiveling angle, assembly and operation manual with declaration of incorporation

**Gripping force maintenance device**
with either mechanical gripping force maintenance or SDV-P pressure maintenance valve

## Sectional diagram

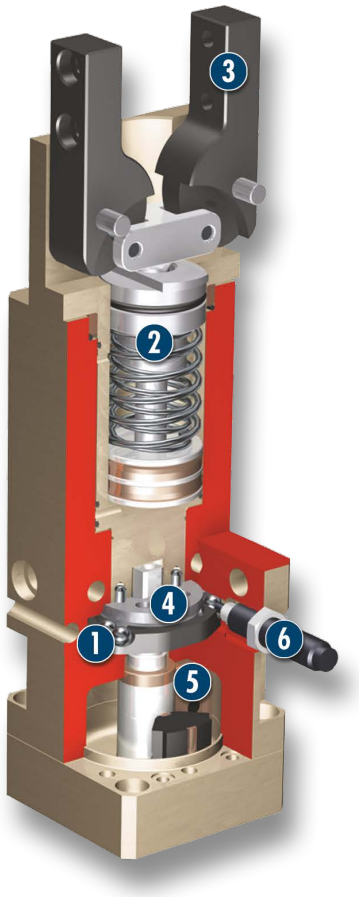


1 **Preset of rotating angle**
using steel balls for any desired angle of rotation

2 **Gripper drive**
via integrated pneumatic piston

3 **Base jaw**
for mounting the top fingers

4 **End-position damping assembly**
for end-position adjustment and damping

5 **Rotor**
as a compact, powerful drive

6 **Hydraulic shock absorber**
to increase the damping performance

## Functional description

As its rotor is actuated with pressure, the drive rotates the integrated gripping module. The module itself is driven by its own piston. The piston motion is subsequently transformed into a synchronized gripping motion.

## Options and special information

Despite the many options and versions already available as standard, SCHUNK also designs and produces customized versions on request.

## Accessories

Accessories from SCHUNK – the suitable supplement for maximum functionality, reliability and performance of all automation modules.

### Centering sleeves



### Fittings



### Programmable magnetic switch



### Sensor cables



### Plastic inserts





### Sensor Distributor

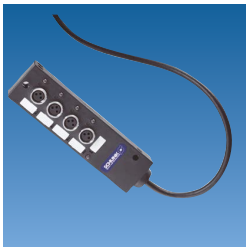

### Gripper pads

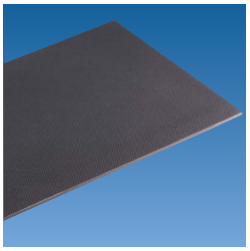

### Pressure maintenance valve



ⓘ For the exact size of the required accessories, availability of this size and the designation and ID, please refer to the additional views at the end of the size in question. You will find more detailed information on our accessory range in the “Accessories” catalog section.

## General note to the series

### Gripping moment

Gripping moment is the arithmetic total of gripping moments for each claw jaw.

### Finger length

The finger length is measured from the upper edge of the gripper housing in direction to the main axis. If the max. admissible finger length is exceeded, the speed of jaw motions have to be reduced and/or the opening angle has to be diminished, as it is done with heavy fingers. The service life of the gripper can shorten.

### Repeat accuracy

is defined as the spread of the limit position after 100 consecutive strokes.

### Workpiece weight

The recommended workpiece weight is calculated for a force-type connection with a coefficient of friction of 0.1 and a safety factor of 2 against slippage of the workpiece on acceleration due to gravity g. Considerably heavier workpiece weights are permitted with form-fit gripping.

### Closing and opening times, cycle times

Closing and opening times are purely the times that the base jaws or fingers are in motion. Cycle times are purely the times that the rotating part (mostly the pinion) is in motion. Valve switching times, hose filling times or PLC reaction times are not included in the above times and must be taken into consideration when determining cycle times.

### Middle attached load

The middle attached load should constitute a typical load. It is defined as the half of the max. possible mass moment of inertia that can be swiveled without restriction, bouncing or hitting, with a centric load and a vertical rotating axis.

# GSM-R 16

**Pneumatic • Gripper-Swivel System • Radial Gripper Swivel Module**



## Gripping force, O.D. gripping

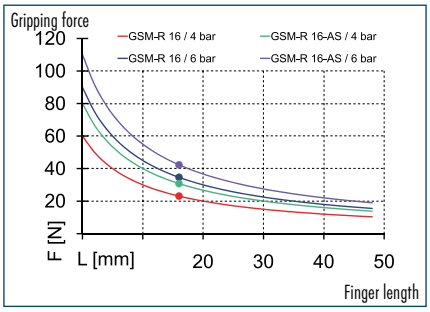


## Finger load

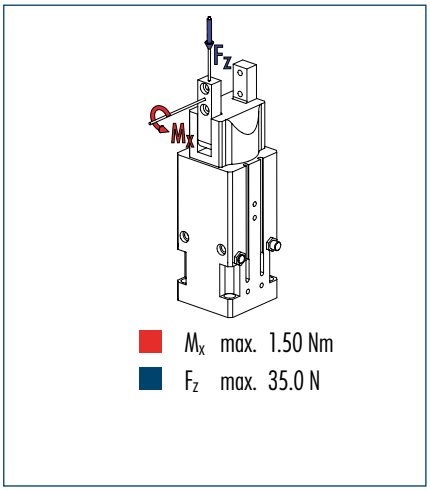


ⓘ The indicated moments and forces are statical values, apply for each base jaw and should not appear simultaneously. If the maximum admissible finger weight is exceeded, throttling is necessary in order to ensure a smooth jaw motion without jerks or bounces. The life-time may reduce.

## Technical data

| Description | | GSM-R 16-E-090 | GSM-R 16-S-090 | GSM-R 16-AS-E-090 | GSM-R 16-AS-S-090 |
|---|---|---|---|---|---|
| **ID** | | **0304638** | **0304738** | **0304639** | **0304739** |
| End position adjustability | [°] | 90 | 90 | 90 | 90 |
| Opening angle per jaw | [°] | 90 | 90 | 90 | 90 |
| Closed angle per jaw up to | [°] | 3.5 | 3.5 | 3.5 | 3.5 |
| Closing moment | [Nm] | 0.9 | 0.9 | 1.1 | 1.1 |
| Spring-actuated closing moment | [Nm] | | | 0.2 | 0.2 |
| Torque | [Nm] | 0.35 | 0.35 | 0.35 | 0.35 |
| Angle of rotation | [°] | 90 | 90 | 90 | 90 |
| Recommended workpiece weight | [kg] | 0.17 | 0.17 | 0.17 | 0.17 |
| Air consumption for gripping | [cm³] | 8.95 | 8.95 | 8.95 | 8.95 |
| Air consumption for swiveling | [cm³] | 9 | 9 | 9 | 9 |
| Weight | [kg] | 0.49 | 0.49 | 0.49 | 0.49 |
| Nominal operating pressure | [bar] | 6 | 6 | 6 | 6 |
| Max. operating pressure | [bar] | 6.5 | 6.5 | 6.5 | 6.5 |
| Minimum operating pressure for gripping | [bar] | 2 | 2 | 4 | 4 |
| Minimum operating pressure for swiveling | [bar] | 3.5 | 3.5 | 3.5 | 3.5 |
| Closing/opening time | [s] | 0.09/0.07 | 0.09/0.07 | 0.1/0.09 | 0.1/0.09 |
| Swiveling time with middle attached load | [s] | 0.12 | 0.12 | 0.12 | 0.12 |
| Max. permitted finger length | [mm] | 32 | 32 | 32 | 32 |
| Max. permitted weight per finger | [kg] | 0.04 | 0.04 | 0.04 | 0.04 |
| IP class | | 30 | 30 | 30 | 30 |
| Min./max. ambient temperature | [°C] | -10/90 | 5/60 | -10/90 | 5/60 |
| Repeat accuracy for gripping | [mm] | 0.02 | 0.02 | 0.02 | 0.02 |
| Repeat accuracy for swiveling | [°] | 0.1 | 0.1 | 0.1 | 0.1 |

### OPTIONS and their characteristics

| Description | | GSM-R 16-E-180 | GSM-R 16-S-180 | GSM-R 16-AS-E-180 | GSM-R 16-AS-S-180 |
|---|---|---|---|---|---|
| ID | | **0303838** | **0303938** | **0303839** | **0303939** |
| End position adjustability | [°] | 180 | 180 | 180 | 180 |
| Air consumption for swiveling | [cm³] | 15 | 15 | 15 | 15 |
| Swiveling time with middle attached load | [s] | 0.18 | 0.18 | 0.18 | 0.18 |

## Main view

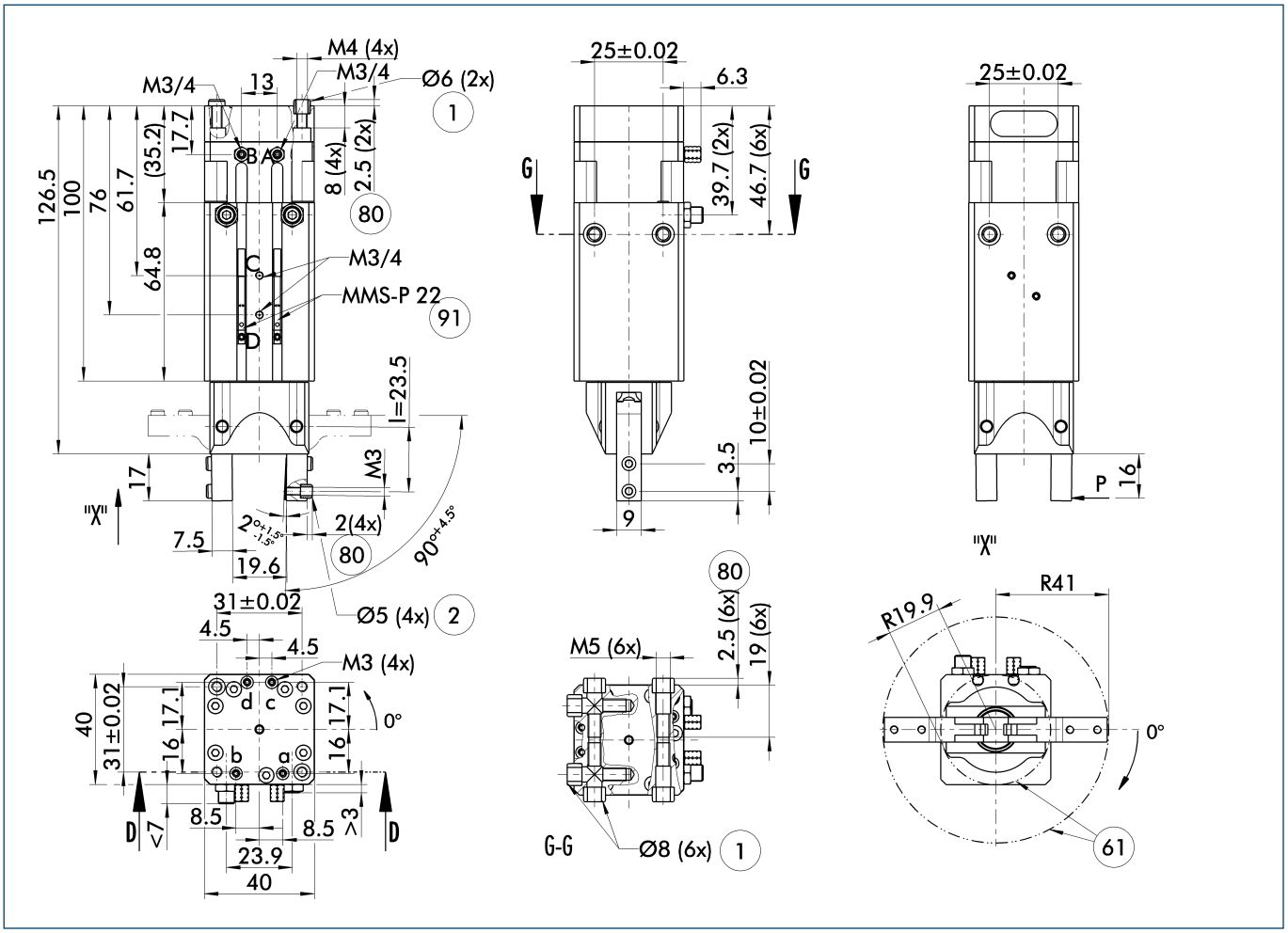


The drawing shows the gripper in the basic version with closed jaws, the dimensions do not include the options described below.

ⓘ The SDV-P pressure maintenance valve can also be used for I.D. or O.D. gripping alternatively or in addition to the spring-loaded, mechanical gripping force maintenance device (see "Accessories" catalog section).

A, a Main/direct connection, rotary actuator clockwise turning
B, b Main/direct connection, rotary actuator anti-clockwise turning
C, c Main/direct connection, gripper opening
D, d Main/direct connection, gripper closing

(1) Connection gripper-rotary actuator
(2) Finger connection
(61) Interfering contour during swiveling
(80) Depth of the centering sleeve hole in the matching part
(91) Monitoring of gripping and swiveling

## Hose-free direct connection

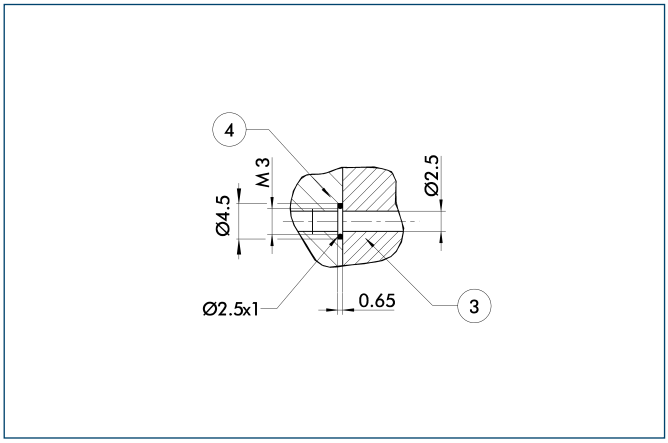


(3) Adapter
(4) Gripper swivel module

The direct connection is used for supplying compressed air without hoses. Instead, the pressure medium is fed through bore-holes in the mounting plate.

## Version with shock absorbers

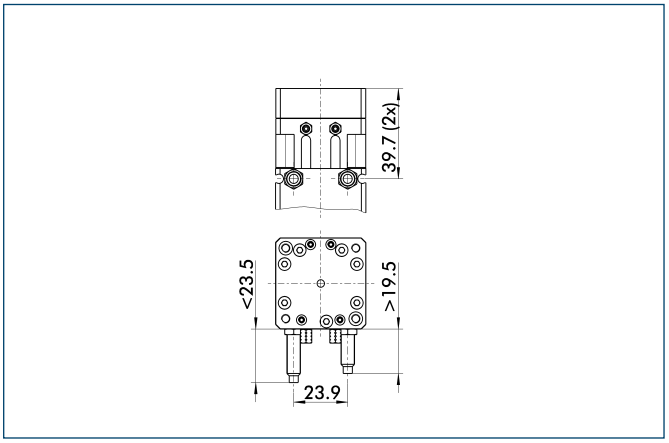


The drawing shows changes in dimensions of the shock absorber versions, compared to the elastomer versions shown on the main view.

## Stacked arrangement

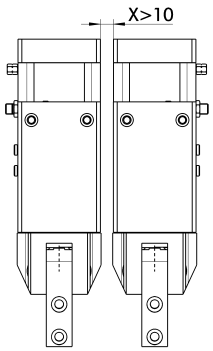


CAUTION: Monitoring is carried out by magnetic switches, and in case of side-by-side assembly of several units, a minimum distance of X mm between the units must be maintained.

## Programmable magnetic switch

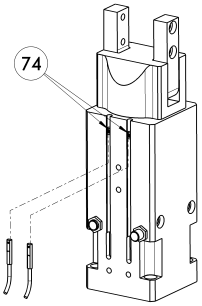


74 Stop for MMS-P

Position monitoring with two programmable positions per sensor. The end position monitoring is mounted in the C-slot.

| Description | ID | Recommended product |
|---|---|---|
| Programmable magnetic switch | | |
| MMS-P 22-S-M8-PNP | **0301370** | • |
| MMSK-P 22-S-PNP | **0301371** | |
| Connection cables | | |
| KA BG08-L 4P-0500 | **0307767** | |
| KA BG08-L 4P-1000 | **0307768** | |
| KA BW08-L 4P-0500 | **0307765** | |
| KA BW08-L 4P-1000 | **0307766** | |
| Sensor Distributor | | |
| V2-M8-4P-2XM8-3P | **0301380** | |

ⓘ Please note the minimum permitted bending radii for the sensor cables, which are generally 35 mm.

ⓘ Per each GSM two sensors MMS-P are required. If standard extension cables (M8-3P) are used, the sensor distributor can be applied.

You can find more detailed information and individual parts of the above-mentioned accessories in the “Accessories” catalog section.

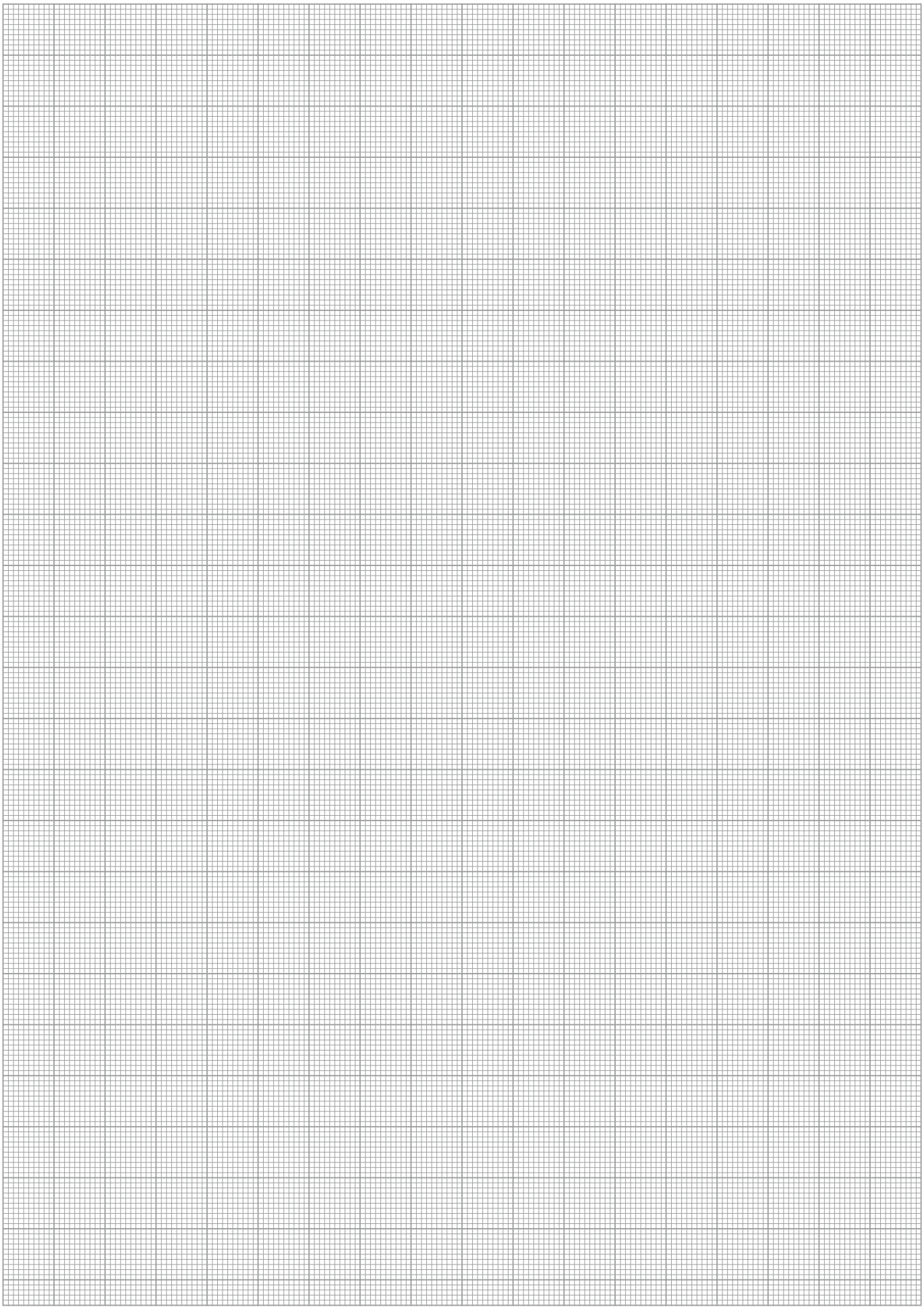

# GSM-R 20

**Pneumatic • Gripper-Swivel System • Radial Gripper Swivel Module**



## Gripping force, O.D. gripping

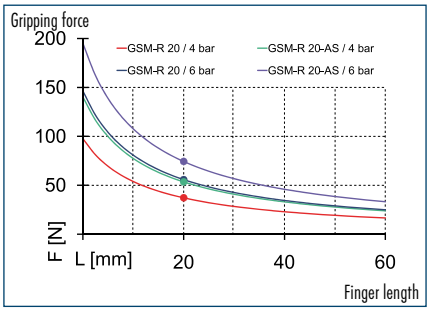


## Finger load

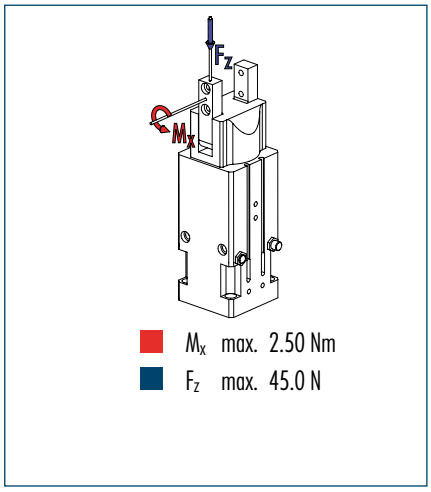


ⓘ The indicated moments and forces are statical values, apply for each base jaw and should not appear simultaneously. If the maximum admissible finger weight is exceeded, throttling is necessary in order to ensure a smooth jaw motion without jerks or bounces. The life-time may reduce.

## Technical data

| Description | | GSM-R 20-E-090 | GSM-R 20-S-090 | GSM-R 20-AS-E-090 | GSM-R 20-AS-S-090 |
|---|---|---|---|---|---|
| **ID** | | **0304648** | **0304748** | **0304649** | **0304749** |
| End position adjustability | [°] | 90 | 90 | 90 | 90 |
| Opening angle per jaw | [°] | 90 | 90 | 90 | 90 |
| Closed angle per jaw up to | [°] | 3.5 | 3.5 | 3.5 | 3.5 |
| Closing moment | [Nm] | 1.8 | 1.8 | 2.4 | 2.4 |
| Spring-actuated closing moment | [Nm] | | | 0.6 | 0.6 |
| Torque | [Nm] | 0.3 | 0.3 | 0.3 | 0.3 |
| Angle of rotation | [°] | 90 | 90 | 90 | 90 |
| Recommended workpiece weight | [kg] | 0.28 | 0.28 | 0.28 | 0.28 |
| Air consumption for gripping | [cm³] | 15.49 | 15.49 | 15.49 | 15.49 |
| Air consumption for swiveling | [cm³] | 9 | 9 | 9 | 9 |
| Weight | [kg] | 0.49 | 0.49 | 0.57 | 0.57 |
| Nominal operating pressure | [bar] | 6 | 6 | 6 | 6 |
| Max. operating pressure | [bar] | 6.5 | 6.5 | 6.5 | 6.5 |
| Minimum operating pressure for gripping | [bar] | 2 | 2 | 4 | 4 |
| Minimum operating pressure for swiveling | [bar] | 4 | 4 | 4 | 4 |
| Closing/opening time | [s] | 0.1/0.09 | 0.1/0.09 | 0.1/0.12 | 0.1/0.12 |
| Swiveling time with middle attached load | [s] | 0.14 | 0.14 | 0.14 | 0.14 |
| Max. permitted finger length | [mm] | 40 | 40 | 40 | 40 |
| Max. permitted weight per finger | [kg] | 0.07 | 0.07 | 0.07 | 0.07 |
| IP class | | 30 | 30 | 30 | 30 |
| Min./max. ambient temperature | [°C] | -10/90 | 5/60 | -10/90 | 5/60 |
| Repeat accuracy for gripping | [mm] | 0.02 | 0.02 | 0.02 | 0.02 |
| Repeat accuracy for swiveling | [°] | 0.1 | 0.1 | 0.1 | 0.1 |

### OPTIONS and their characteristics

| Description | | GSM-R 20-E-180 | GSM-R 20-S-180 | GSM-R 20-AS-E-180 | GSM-R 20-AS-S-180 |
|---|---|---|---|---|---|
| ID | | **0303848** | **0303948** | **0303849** | **0303949** |
| End position adjustability | [°] | 180 | 180 | 180 | 180 |
| Air consumption for swiveling | [cm³] | 15 | 15 | 15 | 15 |
| Swiveling time with middle attached load | [s] | 0.22 | 0.22 | 0.22 | 0.22 |

## Main view

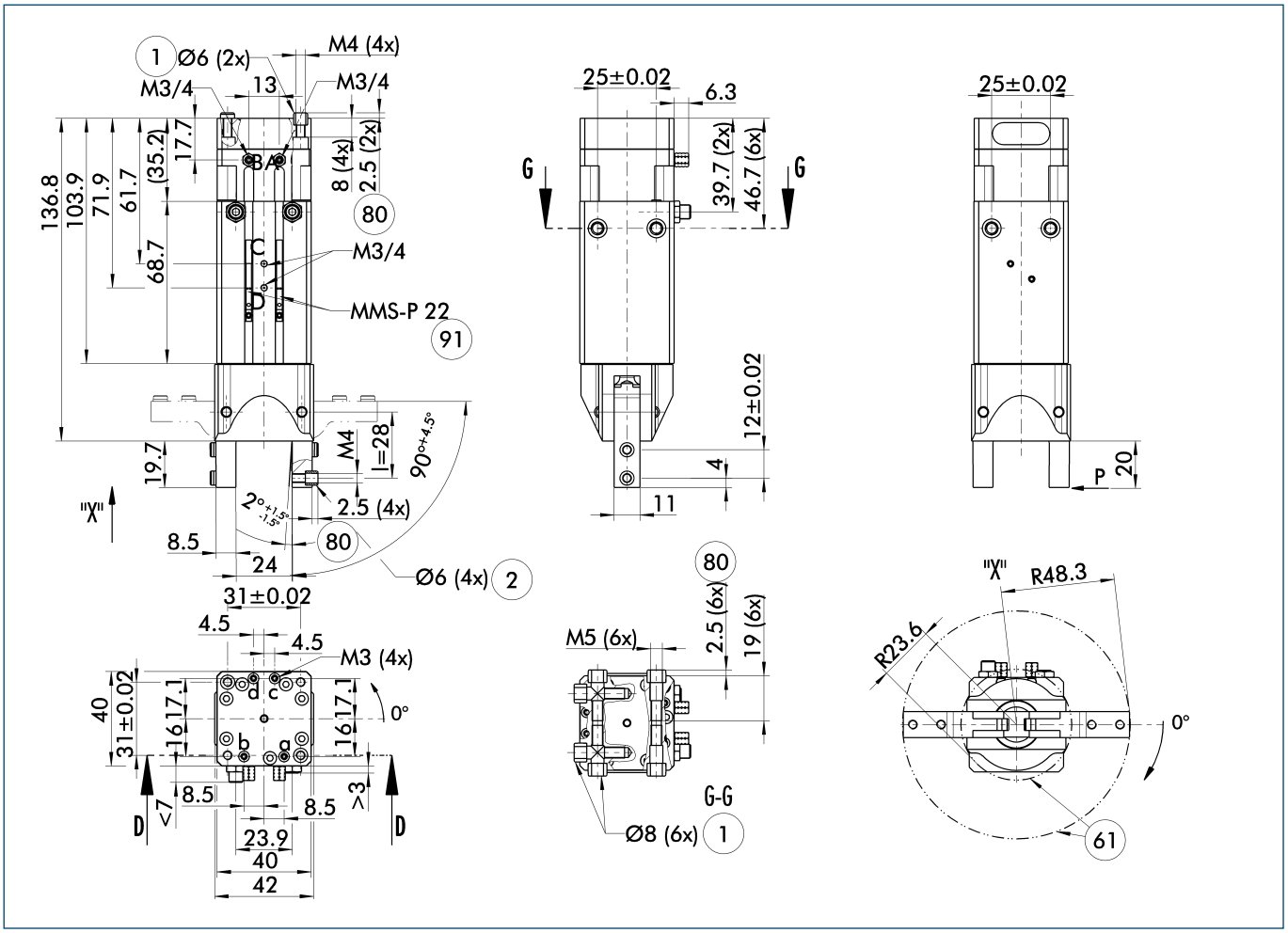


The drawing shows the gripper in the basic version with closed jaws, the dimensions do not include the options described below.

ⓘ The SDV-P pressure maintenance valve can also be used for I.D. or O.D. gripping alternatively or in addition to the spring-loaded, mechanical gripping force maintenance device (see "Accessories" catalog section).

A, a Main/direct connection, rotary actuator clockwise turning
B, b Main/direct connection, rotary actuator anti-clockwise turning
C, c Main/direct connection, gripper opening
D, d Main/direct connection, gripper closing

(1) Connection gripper-rotary actuator
(2) Finger connection
(61) Interfering contour during swiveling
(80) Depth of the centering sleeve hole in the matching part
(91) Monitoring of gripping and swiveling

## Hose-free direct connection

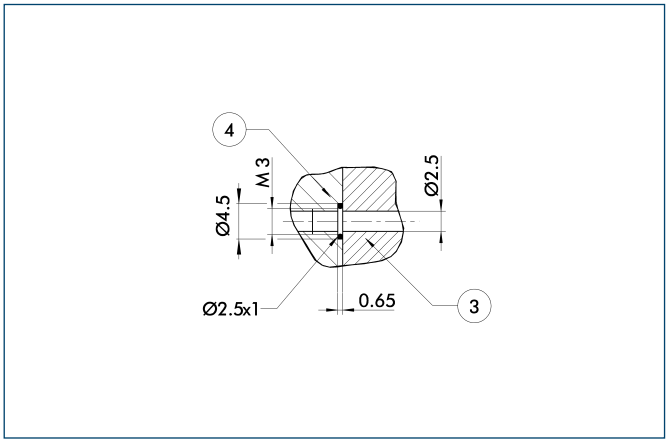


(3) Adapter
(4) Gripper swivel module

The direct connection is used for supplying compressed air without hoses. Instead, the pressure medium is fed through bore-holes in the mounting plate.

## Version with shock absorbers

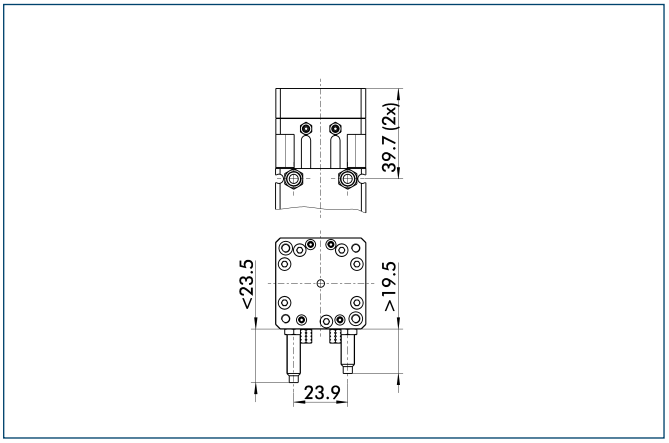


The drawing shows changes in dimensions of the shock absorber versions, compared to the elastomer versions shown on the main view.

## Stacked arrangement

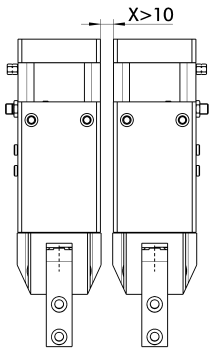


CAUTION: Monitoring is carried out by magnetic switches, and in case of side-by-side assembly of several units, a minimum distance of X mm between the units must be maintained.

## Programmable magnetic switch

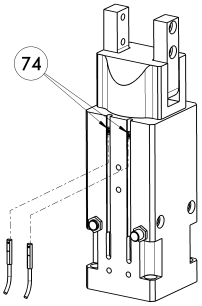


74 Stop for MMS-P

Position monitoring with two programmable positions per sensor. The end position monitoring is mounted in the C-slot.

| Description | ID | Recommended product |
|---|---|---|
| Programmable magnetic switch | | |
| MMS-P 22-S-M8-PNP | **0301370** | • |
| MMSK-P 22-S-PNP | **0301371** | |
| Connection cables | | |
| KA BG08-L 4P-0500 | **0307767** | |
| KA BG08-L 4P-1000 | **0307768** | |
| KA BW08-L 4P-0500 | **0307765** | |
| KA BW08-L 4P-1000 | **0307766** | |
| Sensor Distributor | | |
| V2-M8-4P-2XM8-3P | **0301380** | |

ⓘ Please note the minimum permitted bending radii for the sensor cables, which are generally 35 mm.

ⓘ Per each GSM two sensors MMS-P are required. If standard extension cables (M8-3P) are used, the sensor distributor can be applied.

You can find more detailed information and individual parts of the above-mentioned accessories in the “Accessories” catalog section.

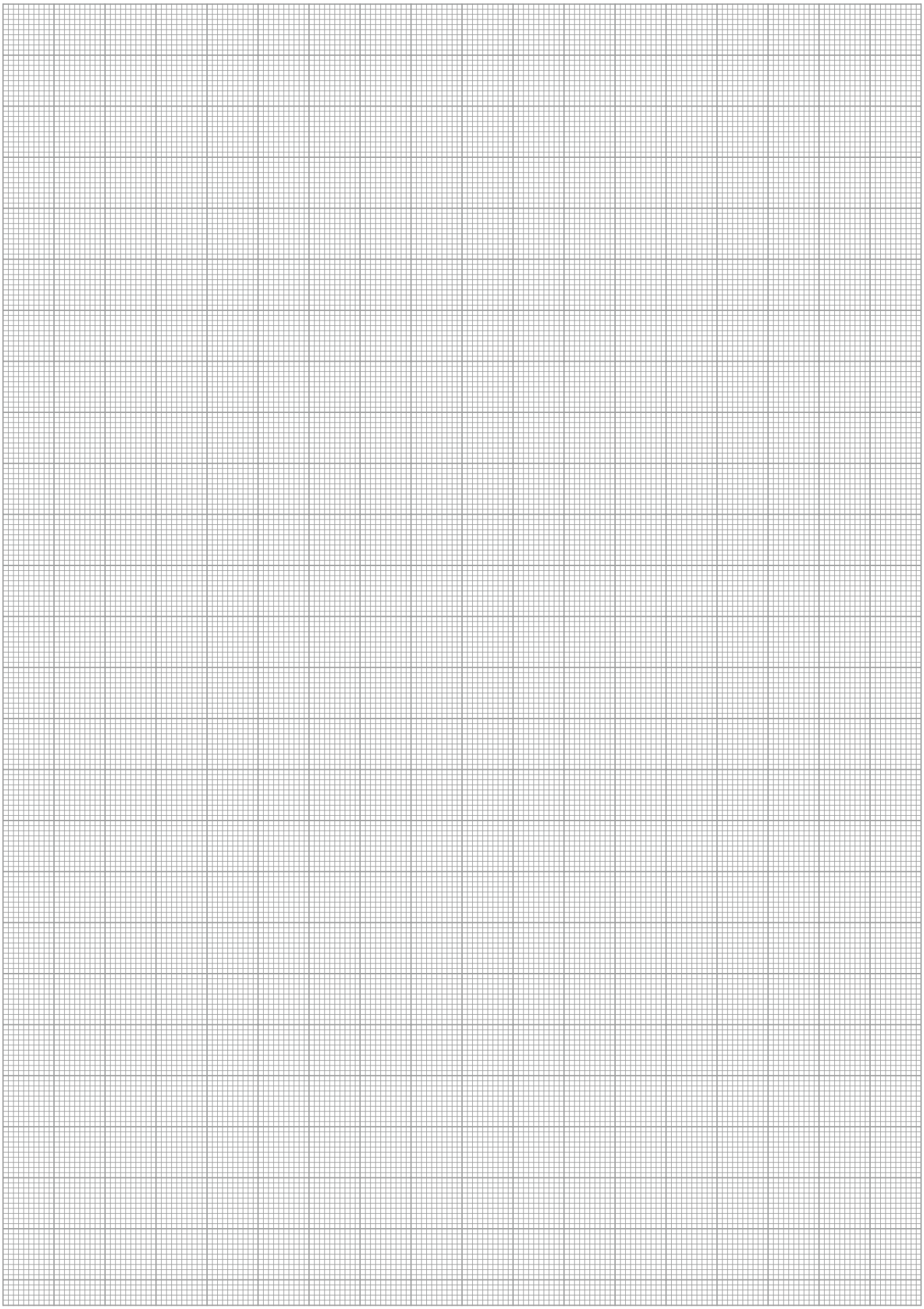

# GSM-R 25

**Pneumatic • Gripper-Swivel System • Radial Gripper Swivel Module**



## Gripping force, O.D. gripping

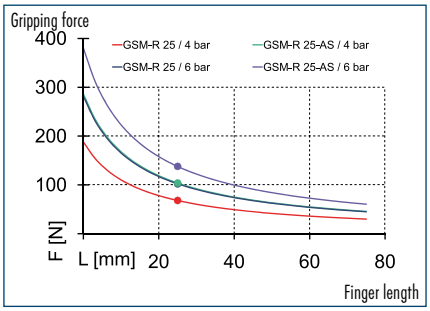


## Finger load

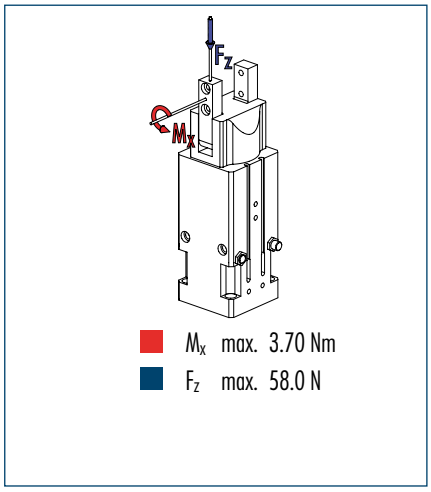


ⓘ The indicated moments and forces are statical values, apply for each base jaw and should not appear simultaneously. If the maximum admissible finger weight is exceeded, throttling is necessary in order to ensure a smooth jaw motion without jerks or bounces. The life-time may reduce.

## Technical data

| Description | | GSM-R 25-E-090 | GSM-R 25-S-090 | GSM-R 25-AS-E-090 | GSM-R 25-AS-S-090 |
|---|---|---|---|---|---|
| **ID** | | **0304658** | **0304758** | **0304659** | **0304759** |
| End position adjustability | [°] | 90 | 90 | 90 | 90 |
| Opening angle per jaw | [°] | 90 | 90 | 90 | 90 |
| Closed angle per jaw up to | [°] | 3.5 | 3.5 | 3.5 | 3.5 |
| Closing moment | [Nm] | 4 | 4 | 5.4 | 5.4 |
| Spring-actuated closing moment | [Nm] | | | 1.4 | 1.4 |
| Torque | [Nm] | 2.9 | 2.9 | 2.9 | 2.9 |
| Angle of rotation | [°] | 90 | 90 | 90 | 90 |
| Recommended workpiece weight | [kg] | 0.52 | 0.52 | 0.52 | 0.52 |
| Air consumption for gripping | [cm³] | 27.37 | 27.37 | 27.37 | 27.37 |
| Air consumption for swiveling | [cm³] | 51 | 51 | 51 | 51 |
| Weight | [kg] | 1.52 | 1.52 | 1.53 | 1.53 |
| Nominal operating pressure | [bar] | 6 | 6 | 6 | 6 |
| Max. operating pressure | [bar] | 6.5 | 6.5 | 6.5 | 6.5 |
| Minimum operating pressure for gripping | [bar] | 2 | 2 | 4 | 4 |
| Minimum operating pressure for swiveling | [bar] | 3 | 3 | 3 | 3 |
| Closing/opening time | [s] | 0.1/0.09 | 0.1/0.09 | 0.1/0.12 | 0.1/0.12 |
| Swiveling time with middle attached load | [s] | 0.14 | 0.14 | 0.14 | 0.14 |
| Max. permitted finger length | [mm] | 50 | 50 | 50 | 50 |
| Max. permitted weight per finger | [kg] | 0.1 | 0.1 | 0.1 | 0.1 |
| IP class | | 30 | 30 | 30 | 30 |
| Min./max. ambient temperature | [°C] | -10/90 | 5/60 | -10/90 | 5/60 |
| Repeat accuracy for gripping | [mm] | 0.02 | 0.02 | 0.02 | 0.02 |
| Repeat accuracy for swiveling | [°] | 0.1 | 0.1 | 0.1 | 0.1 |

### OPTIONS and their characteristics

| Description | | GSM-R 25-E-180 | GSM-R 25-S-180 | GSM-R 25-AS-E-180 | GSM-R 25-AS-S-180 |
|---|---|---|---|---|---|
| ID | | **0303858** | **0303958** | **0303859** | **0303959** |
| End position adjustability | [°] | 180 | 180 | 180 | 180 |
| Air consumption for swiveling | [cm³] | 85 | 85 | 85 | 85 |
| Swiveling time with middle attached load | [s] | 0.24 | 0.24 | 0.24 | 0.24 |

## Main view

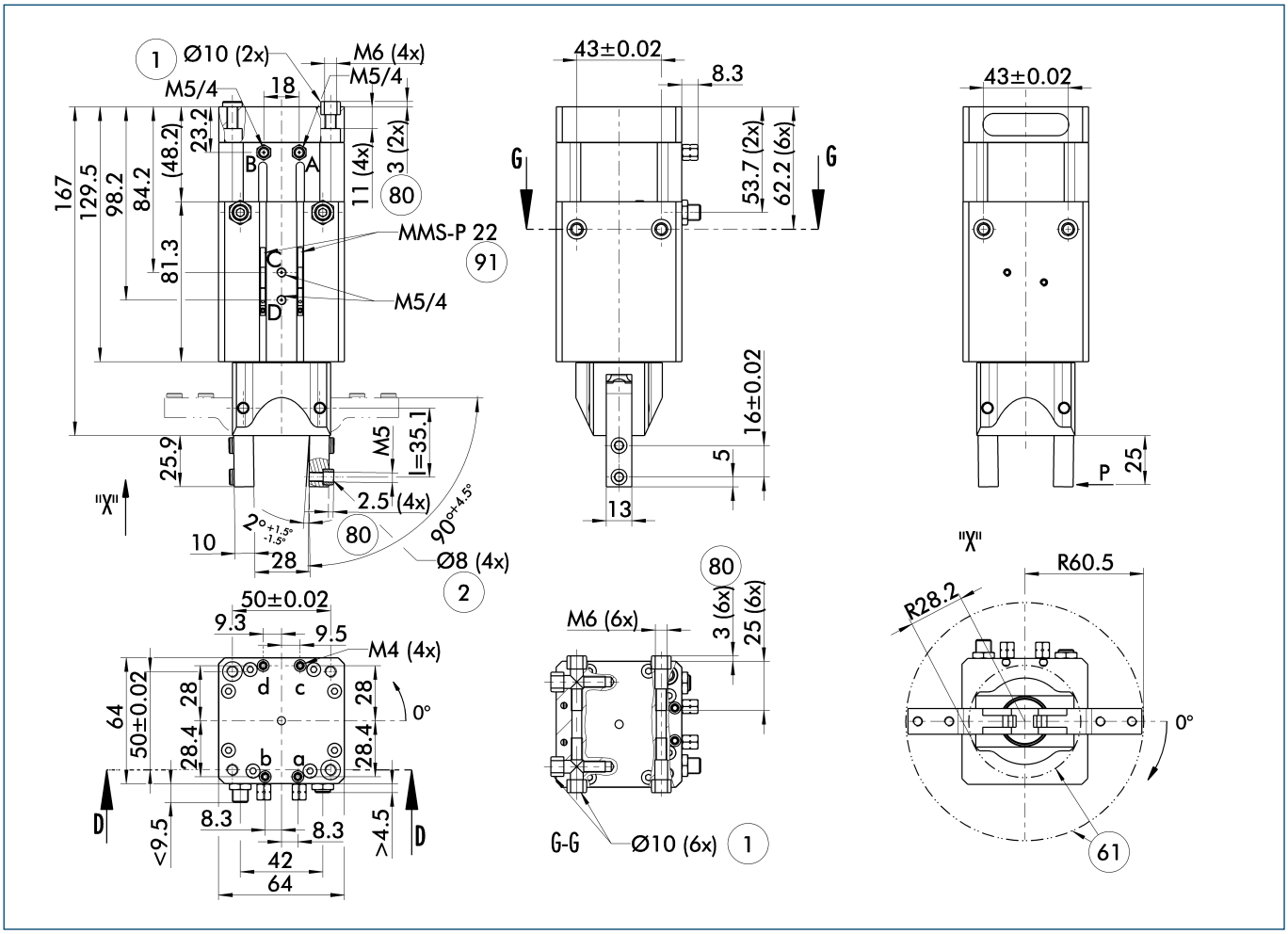


The drawing shows the gripper in the basic version with closed jaws, the dimensions do not include the options described below.

ⓘ The SDV-P pressure maintenance valve can also be used for I.D. or O.D. gripping alternatively or in addition to the spring-loaded, mechanical gripping force maintenance device (see "Accessories" catalog section).

A, a Main/direct connection, rotary actuator clockwise turning
B, b Main/direct connection, rotary actuator anti-clockwise turning
C, c Main/direct connection, gripper opening
D, d Main/direct connection, gripper closing

(1) Connection gripper-rotary actuator
(2) Finger connection
(61) Interfering contour during swiveling
(80) Depth of the centering sleeve hole in the matching part
(91) Monitoring of gripping and swiveling

## Hose-free direct connection

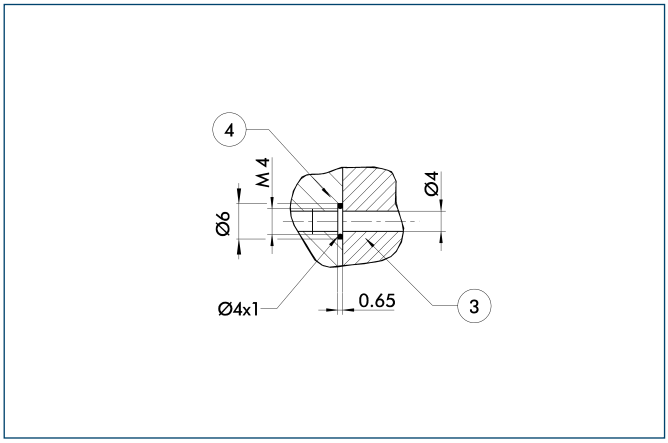


(3) Adapter
(4) Gripper swivel module

The direct connection is used for supplying compressed air without hoses. Instead, the pressure medium is fed through bore-holes in the mounting plate.

## Version with shock absorbers

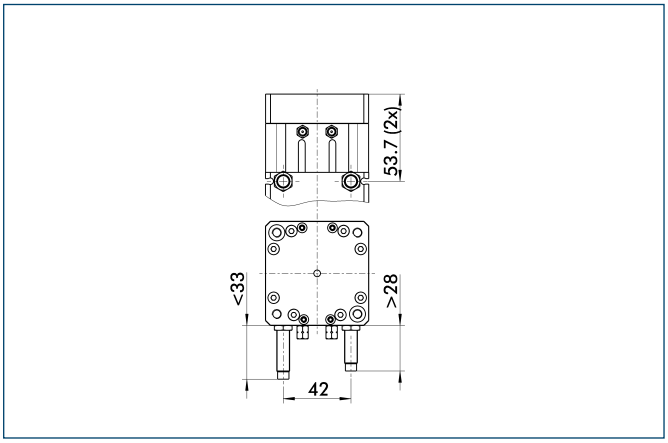


The drawing shows changes in dimensions of the shock absorber versions, compared to the elastomer versions shown on the main view.

## Stacked arrangement

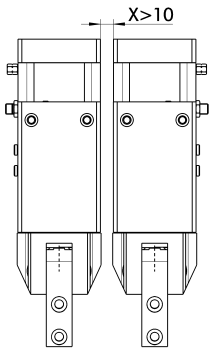


CAUTION: Monitoring is carried out by magnetic switches, and in case of side-by-side assembly of several units, a minimum distance of X mm between the units must be maintained.

## Programmable magnetic switch

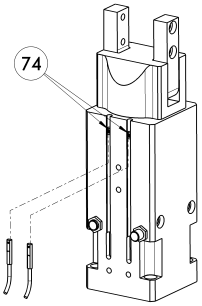


74 Stop for MMS-P

Position monitoring with two programmable positions per sensor. The end position monitoring is mounted in the C-slot.

| Description | ID | Recommended product |
|---|---|---|
| Programmable magnetic switch | | |
| MMS-P 22-S-M8-PNP | **0301370** | • |
| MMSK-P 22-S-PNP | **0301371** | |
| Connection cables | | |
| KA BG08-L 4P-0500 | **0307767** | |
| KA BG08-L 4P-1000 | **0307768** | |
| KA BW08-L 4P-0500 | **0307765** | |
| KA BW08-L 4P-1000 | **0307766** | |
| Sensor Distributor | | |
| V2-M8-4P-2XM8-3P | **0301380** | |

ⓘ Please note the minimum permitted bending radii for the sensor cables, which are generally 35 mm.

ⓘ Per each GSM two sensors MMS-P are required. If standard extension cables (M8-3P) are used, the sensor distributor can be applied.

You can find more detailed information and individual parts of the above-mentioned accessories in the “Accessories” catalog section.

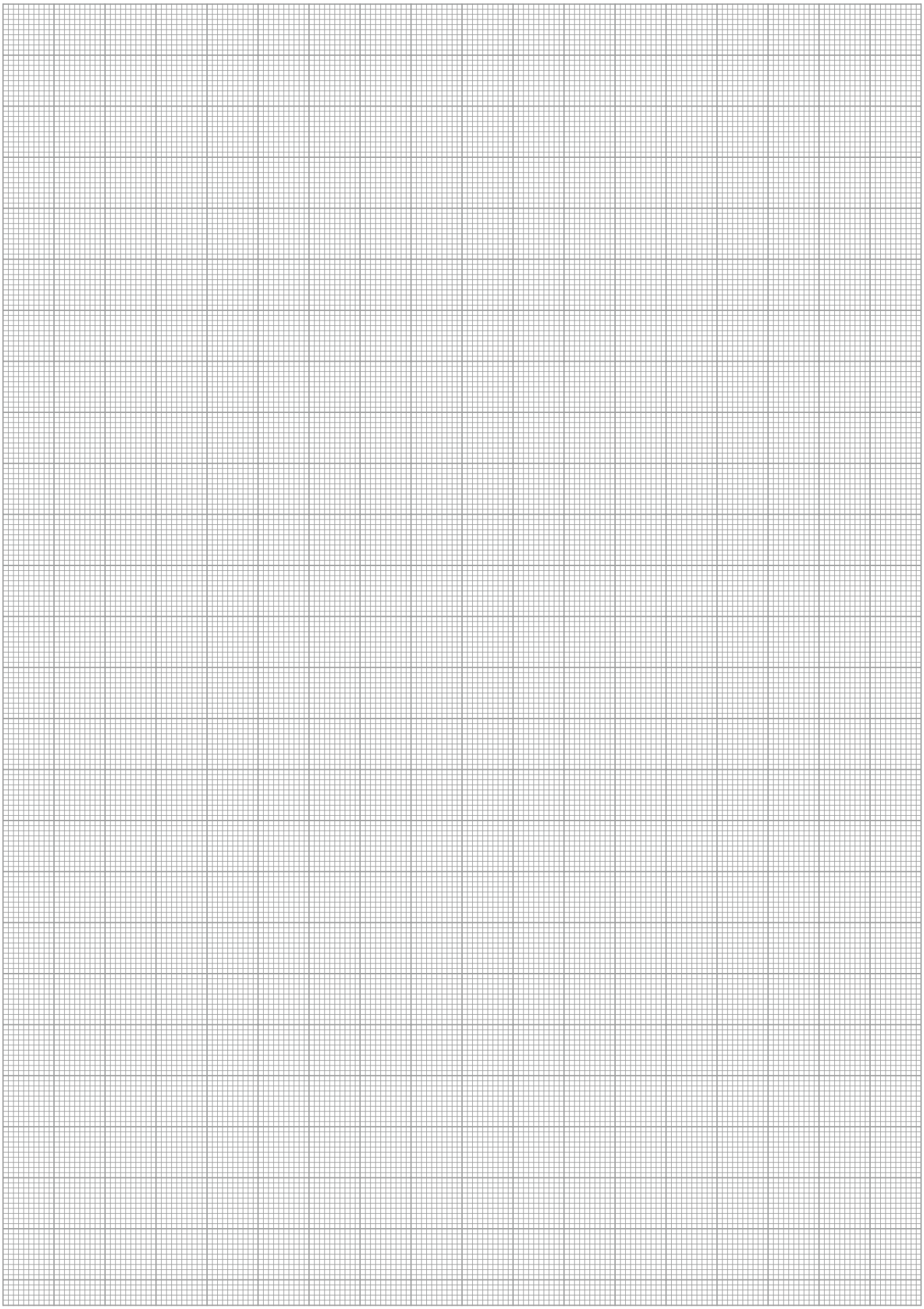

# GSM-R 32





## Gripping force, O.D. gripping

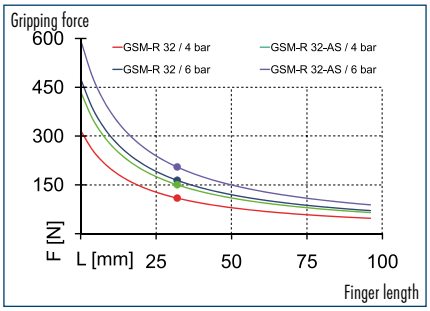


## Finger load

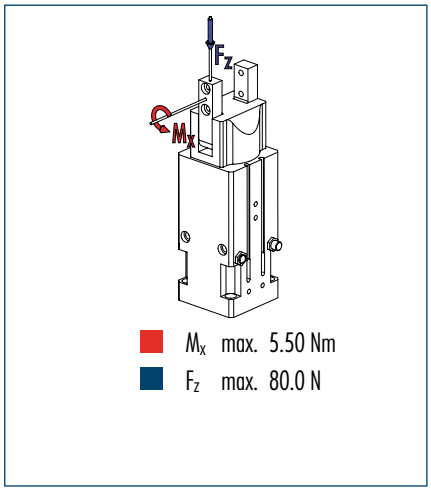


ⓘ The indicated moments and forces are statical values, apply for each base jaw and should not appear simultaneously. If the maximum admissible finger weight is exceeded, throttling is necessary in order to ensure a smooth jaw motion without jerks or bounces. The life-time may reduce.

## Technical data

| Description | | GSM-R 32-E-090 | GSM-R 32-S-090 | GSM-R 32-AS-E-090 | GSM-R 32-AS-S-090 |
|---|---|---|---|---|---|
| ID | | 0304678 | 0304778 | 0304679 | 0304779 |
| End position adjustability | [°] | 90 | 90 | 90 | 90 |
| Opening angle per jaw | [°] | 90 | 90 | 90 | 90 |
| Closed angle per jaw up to | [°] | 3.5 | 3.5 | 3.5 | 3.5 |
| Closing moment | [Nm] | 8 | 8 | 10 | 10 |
| Spring-actuated closing moment | [Nm] | | | 2 | 2 |
| Torque | [Nm] | 2.6 | 2.6 | 2.6 | 2.6 |
| Angle of rotation | [°] | 90 | 90 | 90 | 90 |
| Recommended workpiece weight | [kg] | 0.85 | 0.85 | 0.85 | 0.85 |
| Air consumption for gripping | [cm³] | 48.77 | 48.77 | 48.77 | 48.77 |
| Air consumption for swiveling | [cm³] | 51 | 51 | 51 | 51 |
| Weight | [kg] | 1.83 | 1.83 | 1.86 | 1.86 |
| Nominal operating pressure | [bar] | 6 | 6 | 6 | 6 |
| Max. operating pressure | [bar] | 6.5 | 6.5 | 6.5 | 6.5 |
| Minimum operating pressure for gripping | [bar] | 2 | 2 | 4 | 4 |
| Minimum operating pressure for swiveling | [bar] | 3 | 3 | 3 | 3 |
| Closing/opening time | [s] | 0.11/0.12 | 0.11/0.12 | 0.12/0.17 | 0.12/0.17 |
| Swiveling time with middle attached load | [s] | 0.14 | 0.14 | 0.14 | 0.14 |
| Max. permitted finger length | [mm] | 64 | 64 | 64 | 64 |
| Max. permitted weight per finger | [kg] | 0.15 | 0.15 | 0.15 | 0.15 |
| IP class | | 30 | 30 | 30 | 30 |
| Min./max. ambient temperature | [°C] | -10/90 | 5/60 | -10/90 | 5/60 |
| Repeat accuracy for gripping | [mm] | 0.02 | 0.02 | 0.02 | 0.02 |
| Repeat accuracy for swiveling | [°] | 0.1 | 0.1 | 0.1 | 0.1 |

### OPTIONS and their characteristics

| Description | | GSM-R 32-E-180 | GSM-R 32-S-180 | GSM-R 32-AS-E-180 | GSM-R 32-AS-S-180 |
|---|---|---|---|---|---|
| ID | | 0303878 | 0303978 | 0303879 | 0303979 |
| End position adjustability | [°] | 180 | 180 | 180 | 180 |
| Air consumption for swiveling | [cm³] | 85 | 85 | 85 | 85 |
| Swiveling time with middle attached load | [s] | 0.24 | 0.24 | 0.24 | 0.24 |

## Main view

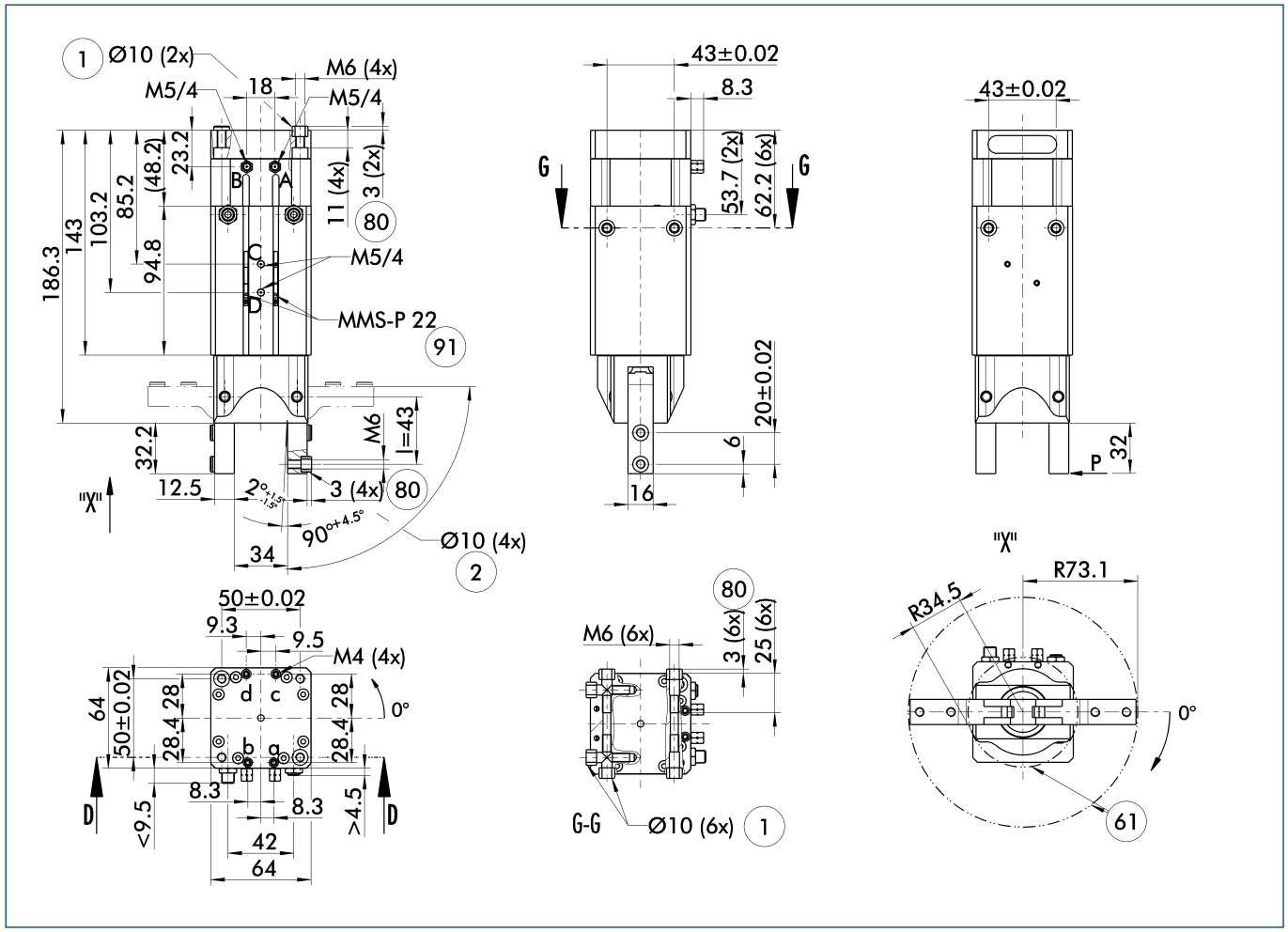


The drawing shows the gripper in the basic version with closed jaws, the dimensions do not include the options described below.

ⓘ The SDV-P pressure maintenance valve can also be used for I.D. or O.D. gripping alternatively or in addition to the spring-loaded, mechanical gripping force maintenance device (see "Accessories" catalog section).

A, a Main/direct connection, rotary actuator clockwise turning
B, b Main/direct connection, rotary actuator anti-clockwise turning
C, c Main/direct connection, gripper opening
D, d Main/direct connection, gripper closing

① Connection gripper-rotary actuator
② Finger connection
61 Interfering contour during swiveling
80 Depth of the centering sleeve hole in the matching part
91 Monitoring of gripping and swiveling

## Hose-free direct connection

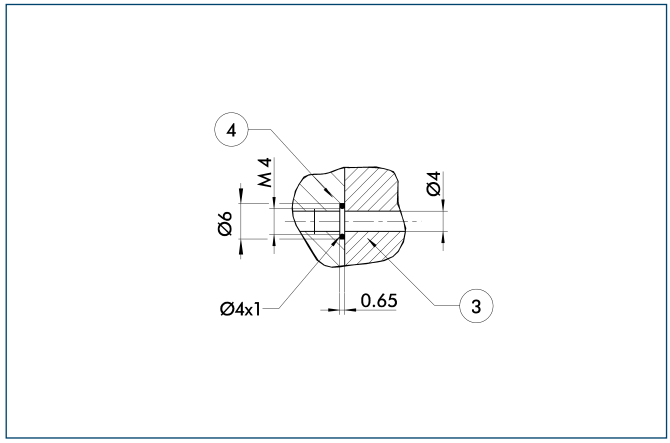


③ Adapter
④ Gripper swivel module

The direct connection is used for supplying compressed air without hoses. Instead, the pressure medium is fed through bore-holes in the mounting plate.

## Version with shock absorbers

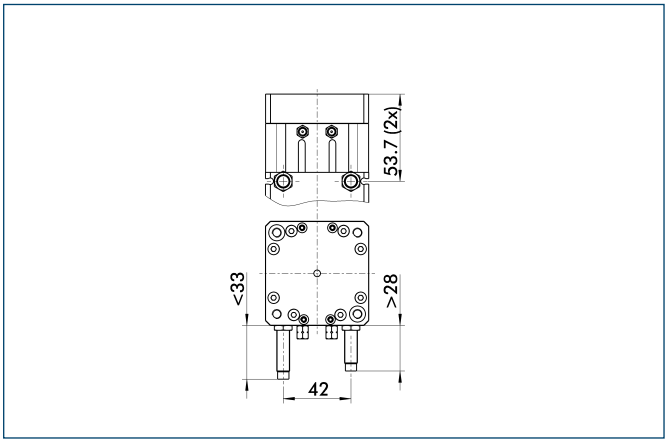


The drawing shows changes in dimensions of the shock absorber versions, compared to the elastomer versions shown on the main view.

## Stacked arrangement

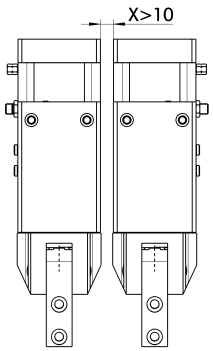


CAUTION: Monitoring is carried out by magnetic switches, and in case of side-by-side assembly of several units, a minimum distance of X mm between the units must be maintained.

## Programmable magnetic switch

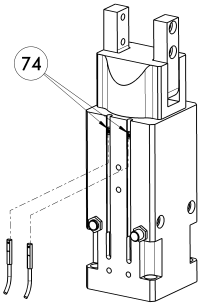


74 Stop for MMS-P

Position monitoring with two programmable positions per sensor. The end position monitoring is mounted in the C-slot.

| Description | ID | Recommended product |
|---|---|---|
| Programmable magnetic switch | | |
| MMS-P 22-S-M8-PNP | **0301370** | • |
| MMSK-P 22-S-PNP | **0301371** | |
| Connection cables | | |
| KA BG08-L 4P-0500 | **0307767** | |
| KA BG08-L 4P-1000 | **0307768** | |
| KA BW08-L 4P-0500 | **0307765** | |
| KA BW08-L 4P-1000 | **0307766** | |
| Sensor Distributor | | |
| V2-M8-4P-2XM8-3P | **0301380** | |

ⓘ Please note the minimum permitted bending radii for the sensor cables, which are generally 35 mm.

ⓘ Per each GSM two sensors MMS-P are required. If standard extension cables (M8-3P) are used, the sensor distributor can be applied.

You can find more detailed information and individual parts of the above-mentioned accessories in the “Accessories” catalog section.

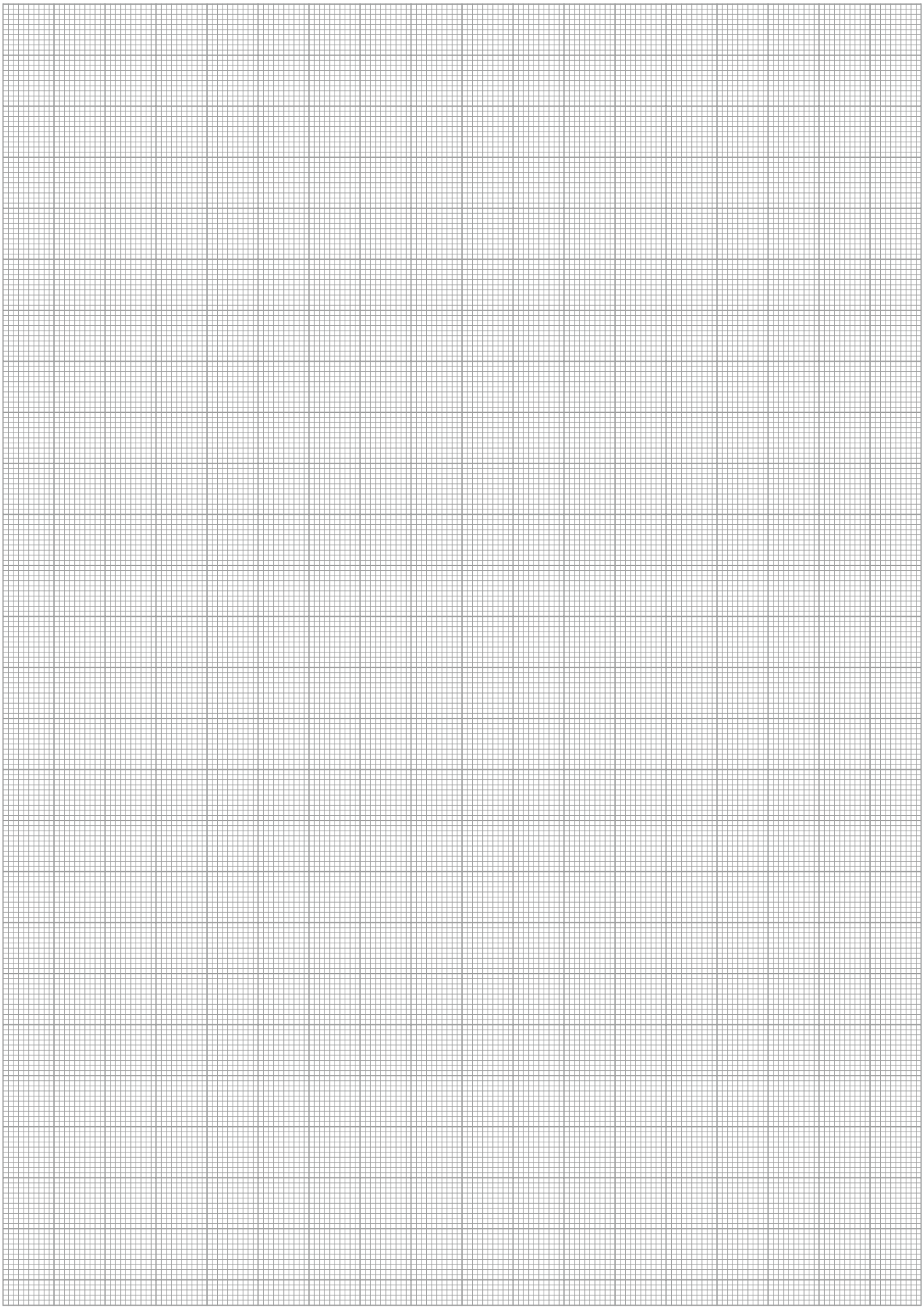

# GSM-R 40





## Gripping force, O.D. gripping

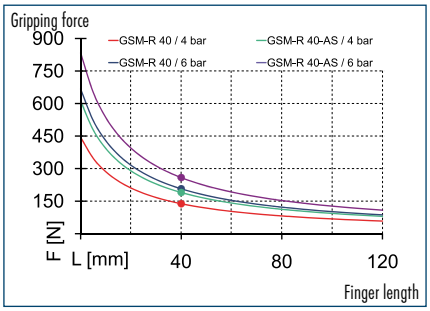


## Finger load

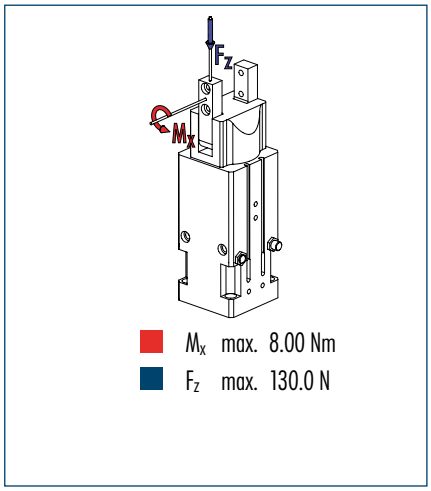


ⓘ The indicated moments and forces are statical values, apply for each base jaw and should not appear simultaneously. If the maximum admissible finger weight is exceeded, throttling is necessary in order to ensure a smooth jaw motion without jerks or bounces. The life-time may reduce.

## Technical data

| Description | | GSM-R 40-E-090 | GSM-R 40-S-090 | GSM-R 40-AS-E-090 | GSM-R 40-AS-S-090 |
|---|---|---|---|---|---|
| **ID** | | **0304688** | **0304788** | **0304689** | **0304789** |
| End position adjustability | [°] | 90 | 90 | 90 | 90 |
| Opening angle per jaw | [°] | 90 | 90 | 90 | 90 |
| Closed angle per jaw up to | [°] | 3.5 | 3.5 | 3.5 | 3.5 |
| Closing moment | [Nm] | 12 | 12 | 15 | 15 |
| Spring-actuated closing moment | [Nm] | | | 3 | 3 |
| Torque | [Nm] | 2.3 | 2.3 | 2.3 | 2.3 |
| Angle of rotation | [°] | 90 | 90 | 90 | 90 |
| Recommended workpiece weight | [kg] | 1 | 1 | 1 | 1 |
| Air consumption for gripping | [cm³] | 80.52 | 80.52 | 80.52 | 80.52 |
| Air consumption for swiveling | [cm³] | 51 | 51 | 51 | 51 |
| Weight | [kg] | 2.15 | 2.15 | 2.19 | 2.19 |
| Nominal operating pressure | [bar] | 6 | 6 | 6 | 6 |
| Max. operating pressure | [bar] | 6.5 | 6.5 | 6.5 | 6.5 |
| Minimum operating pressure for gripping | [bar] | 2 | 2 | 4 | 4 |
| Minimum operating pressure for swiveling | [bar] | 3 | 3 | 3 | 3 |
| Closing/opening time | [s] | 0.23/0.18 | 0.23/0.18 | 0.21/0.3 | 0.21/0.3 |
| Swiveling time with middle attached load | [s] | 0.14 | 0.14 | 0.14 | 0.14 |
| Max. permitted finger length | [mm] | 80 | 80 | 80 | 80 |
| Max. permitted weight per finger | [kg] | 0.25 | 0.25 | 0.25 | 0.25 |
| IP class | | 30 | 30 | 30 | 30 |
| Min./max. ambient temperature | [°C] | -10/90 | 5/60 | -10/90 | 5/60 |
| Repeat accuracy for gripping | [mm] | 0.02 | 0.02 | 0.02 | 0.02 |
| Repeat accuracy for swiveling | [°] | 0.1 | 0.1 | 0.1 | 0.1 |

### OPTIONS and their characteristics

| Description | | GSM-R 40-E-180 | GSM-R 40-S-180 | GSM-R 40-AS-E-180 | GSM-R 40-AS-S-180 |
|---|---|---|---|---|---|
| ID | | **0303888** | **0303988** | **0303889** | **0303989** |
| End position adjustability | [°] | 180 | 180 | 180 | 180 |
| Air consumption for swiveling | [cm³] | 85 | 85 | 85 | 85 |
| Swiveling time with middle attached load | [s] | 0.24 | 0.24 | 0.24 | 0.24 |

## Main view

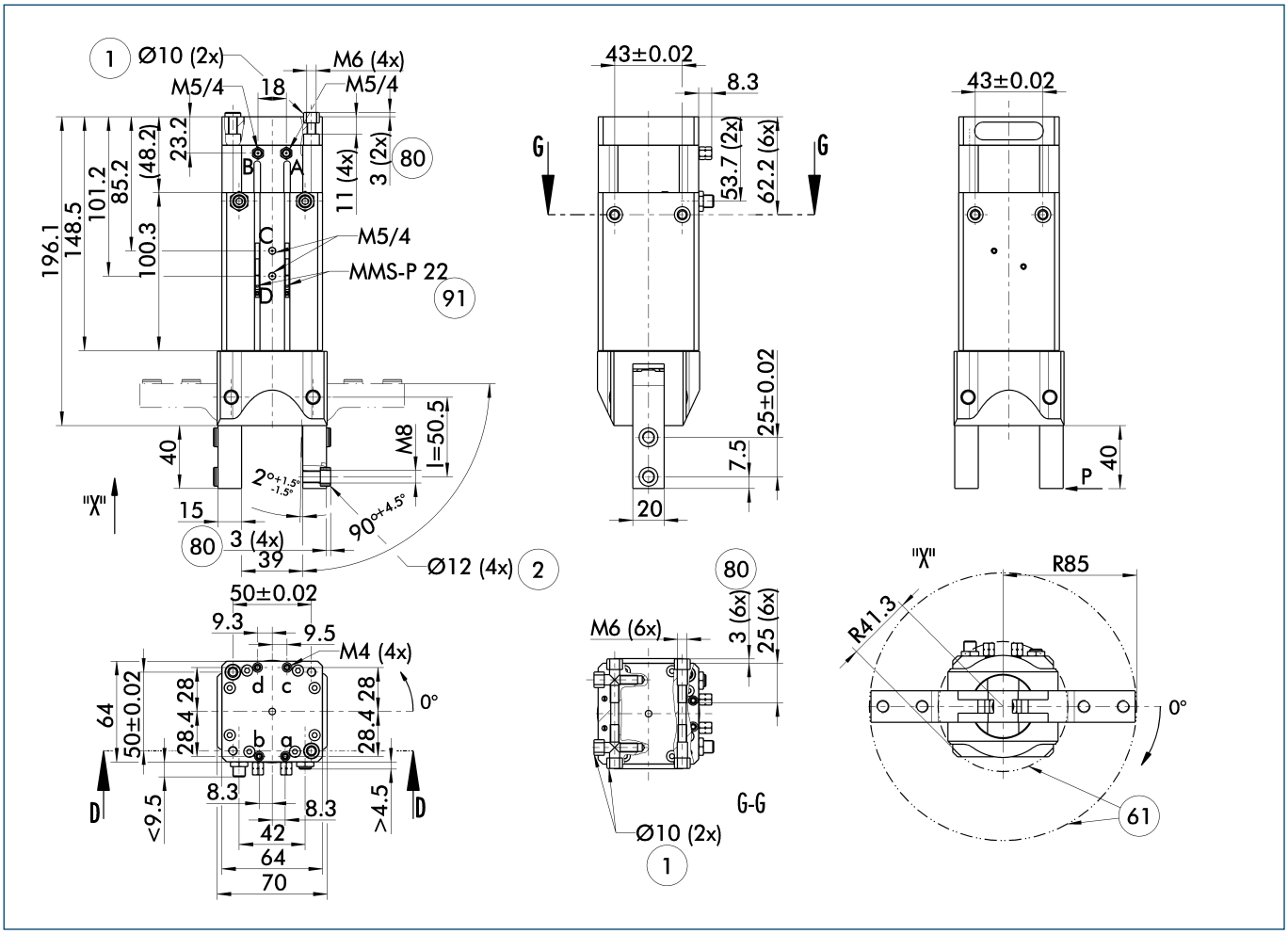


The drawing shows the gripper in the basic version with closed jaws, the dimensions do not include the options described below.

ⓘ The SDV-P pressure maintenance valve can also be used for I.D. or O.D. gripping alternatively or in addition to the spring-loaded, mechanical gripping force maintenance device (see "Accessories" catalog section).

A, a Main/direct connection, rotary actuator clockwise turning
B, b Main/direct connection, rotary actuator anti-clockwise turning
C, c Main/direct connection, gripper opening
D, d Main/direct connection, gripper closing

(1) Connection gripper-rotary actuator
(2) Finger connection
(61) Interfering contour during swiveling
(80) Depth of the centering sleeve hole in the matching part
(91) Monitoring of gripping and swiveling

## Hose-free direct connection

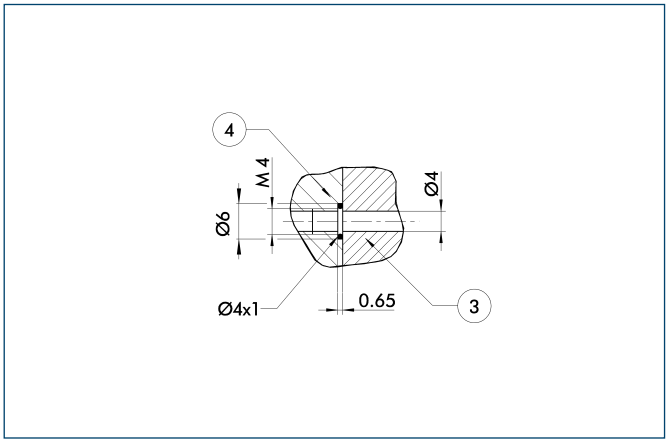


(3) Adapter
(4) Gripper swivel module

The direct connection is used for supplying compressed air without hoses. Instead, the pressure medium is fed through bore-holes in the mounting plate.

## Version with shock absorbers

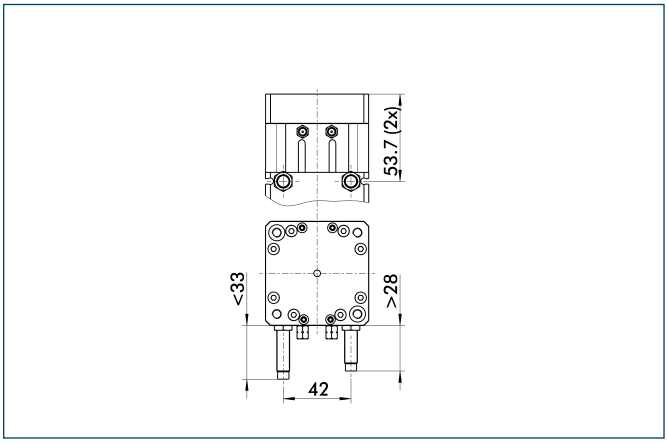


The drawing shows changes in dimensions of the shock absorber versions, compared to the elastomer versions shown on the main view.

## Stacked arrangement

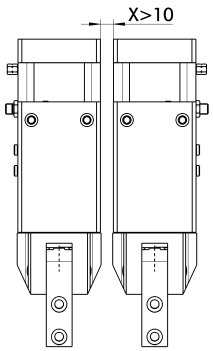


CAUTION: Monitoring is carried out by magnetic switches, and in case of side-by-side assembly of several units, a minimum distance of X mm between the units must be maintained.

## Programmable magnetic switch

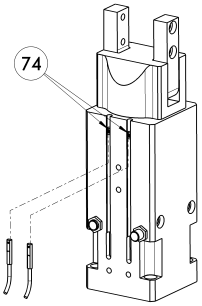


(74) Stop for MMS-P

Position monitoring with two programmable positions per sensor. The end position monitoring is mounted in the C-slot.

| Description | ID | Recommended product |
|---|---|---|
| Programmable magnetic switch | | |
| MMS-P 22-S-M8-PNP | **0301370** | • |
| MMSK-P 22-S-PNP | **0301371** | |
| Connection cables | | |
| KA BG08-L 4P-0500 | **0307767** | |
| KA BG08-L 4P-1000 | **0307768** | |
| KA BW08-L 4P-0500 | **0307765** | |
| KA BW08-L 4P-1000 | **0307766** | |
| Sensor Distributor | | |
| V2-M8-4P-2XM8-3P | **0301380** | |

ⓘ Please note the minimum permitted bending radii for the sensor cables, which are generally 35 mm.

ⓘ Per each GSM two sensors MMS-P are required. If standard extension cables (M8-3P) are used, the sensor distributor can be applied.

You can find more detailed information and individual parts of the above-mentioned accessories in the “Accessories” catalog section.

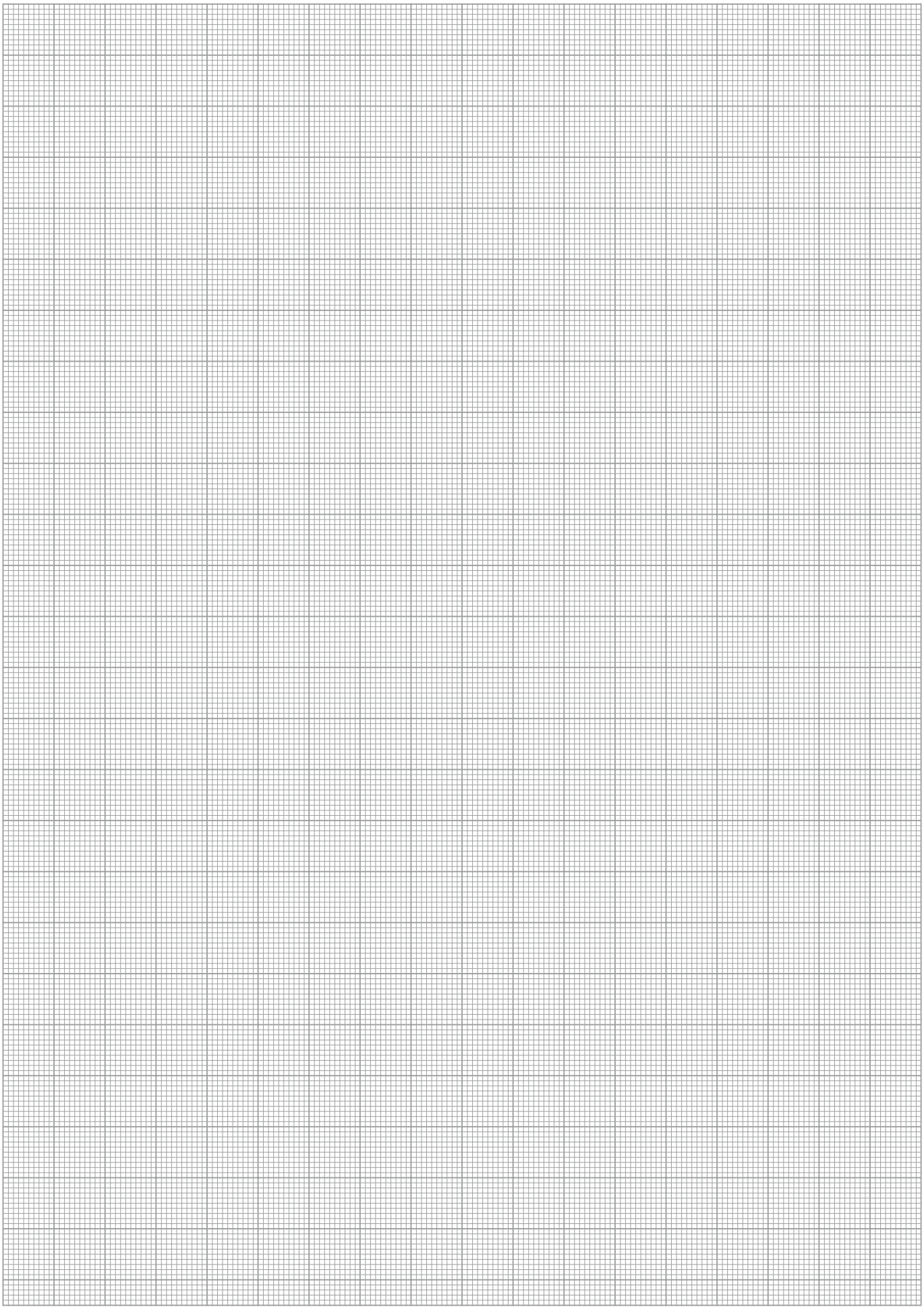

# Electric Gripping Modules

## 2-Finger Parallel Gripper



2-FINGER PARALLEL GRIPPER


| Series | Size | Page |
|---|---|---|
| Control | | 1202 |
| **Gripper for small components** | | |
| MEG | | 1204 |
| MEG | 40 | 1208 |
| MEG | 50 | 1212 |
| MEG | 64 | 1216 |
| **Universal Gripper** | | |
| EGN | | 1220 |
| EGN | 80 | 1224 |
| EGN | 100 | 1228 |
| EGN | 160 | 1232 |
| PG | | 1236 |
| PG | 70 | 1240 |
| EVG | | 1244 |
| EVG | 55-40 | 1248 |
| EVG | 55-100 | 1250 |
| **Long-stroke Gripper** | | |
| PEH | | 1252 |
| PEH | 30 | 1256 |
| PEH | 40 | 1260 |
| PEH | 50 | 1264 |
| LEG | | 1268 |
| LEG | 760 | 1272 |

## Control

To control the electric gripping modules, the approved SCHUNK electronics with SMP is used.

### Productive application

### Parameterisation/diagnostics

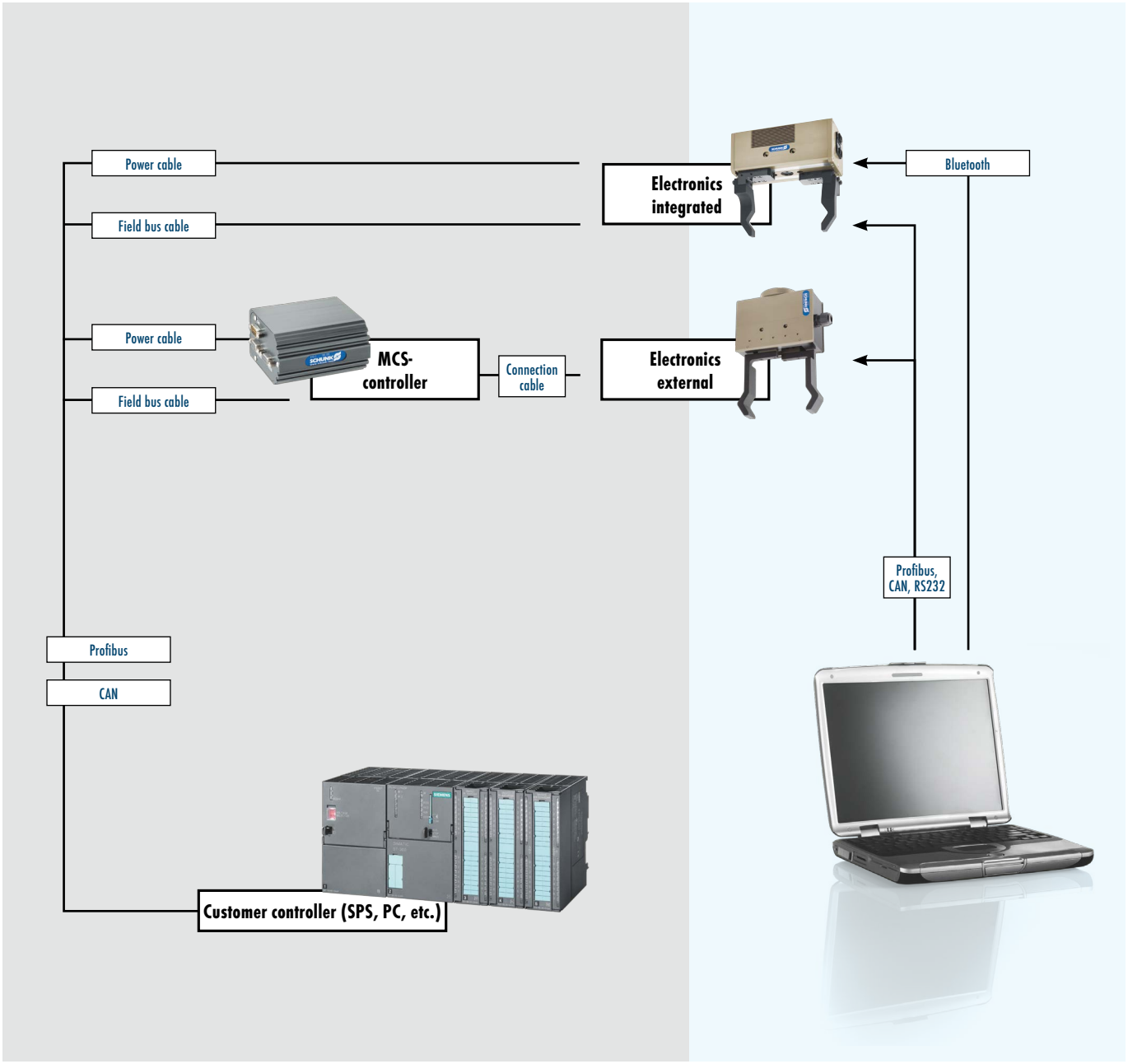


## Your advantages and benefits

**Control and feedback control electronics**
integrated or external in one housing

**Easy control**
via Schunk Motion Protocol (SMP) or by software blocks for e.g. Siemens PLC SIMATIC S7

**Fast and easy setup**
supported by an integrated setup wizard

## MCDemo setup software

The MCDemo programming software lets you setup the electric gripper fast and easy.
This is also supported by an integrated setup wizard. Instructions are supplied on data carriers.

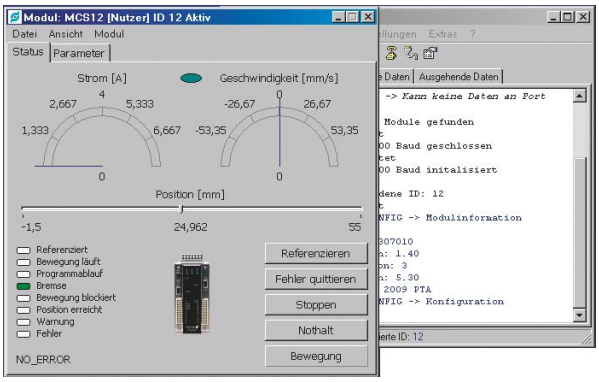


MCDemo: simple parameterisation, setup and diagnostics

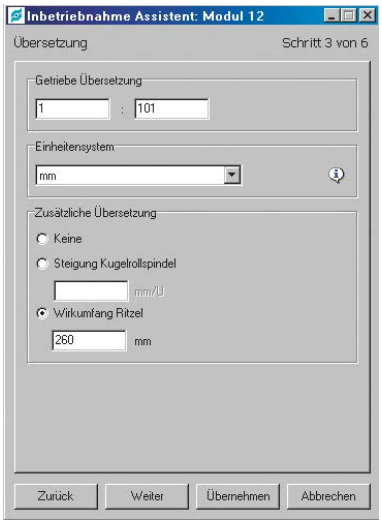


Setup wizard: fast and simple setup

## Contol via FB10 function block for Siemens S7-300/400

The FB10 function block eases the communication between the S7 and the SMP protocol of the electric gripper.
Thereby, the electric gripper can be easily controlled and feedback signals can be evaluated.

```
CALL  "FB_MODULE_PB" , "DB_INSTANCE_MODULE_1"    FB10 / DB11
 I_ADDR           :=W#16#100
 I_FL_CYCLE_BYTE  :=1
 I_POS_MODE       :="m_MW8"                      MW8
 I_ENABLE         :=L68.0
 I_ACK            :=L68.1
 I_RESEND_CMD     :=L68.2
 I_CMD_REF_MODUL  :=L68.3
 I_CMD_JOG_PLUS   :=L68.4
 I_CMD_JOG_MINUS  :=L68.5
 I_CMD_START_POS  :=L68.6
 I_CMD_STOP_MOTION :=L68.7
 I_POS_JERK       :="m_MD10"                     MD10
 I_POS_ACCELERATION:="m_MD14"                    MD14
 I_POS_VELOCITY   :="m_MD18"                     MD18
 I_POS_SEQUENCE   :="m_MW22"                     MW22
 I_POS_POSITION   :="m_MD24"                     MD24
 I_POS_CURRENT    :="m_MD28"                     MD28
 I_POS_TIME       :="m_MD32"                     MD32
 I_RES_TIME       :=S5T#2S
 I_TIMER_WDOG     :="t_T10"                      T10
 M_REFERENCED     :="m_M3.0"                     M3.0
 M_IN_MOTION      :="m_M3.1"                     M3.1
 M_PROG_ACTIVE    :="m_M3.2"                     M3.2
 M_WARNING        :="m_M3.3"                     M3.3
 M_ALARM          :="m_M3.4"                     M3.4
 M_BRAKE_ACTIVE   :="m_M3.5"                     M3.5
 M_MOTION_BLOCKED :="m_M3.6"                     M3.6
 M_POS_REACHED    :="m_M3.7"                     M3.7
 M_ACT_POS        :="m_MD36"                     MD36
 M_ACT_VELO       :="m_MD40"                     MD40
 M_ACT_CURR       :="m_MD44"                     MD44
 M_ERROR          :="m_MW48"                     MW48
NOP   0
```

FB10 (AWL): for simple control, evaluation and diagnostics

# MEG

**Electrical • 2-Finger Parallel Gripper • Gripper for small components**

**Sizes**
40 ... 64

**Weight**
0.47 kg ... 1.42 kg

**Gripping force**
40 N ... 175 N

**Stroke per finger**
6 mm ... 10 mm

**Workpiece weight**
0.3 kg ... 0.85 kg

## Application example

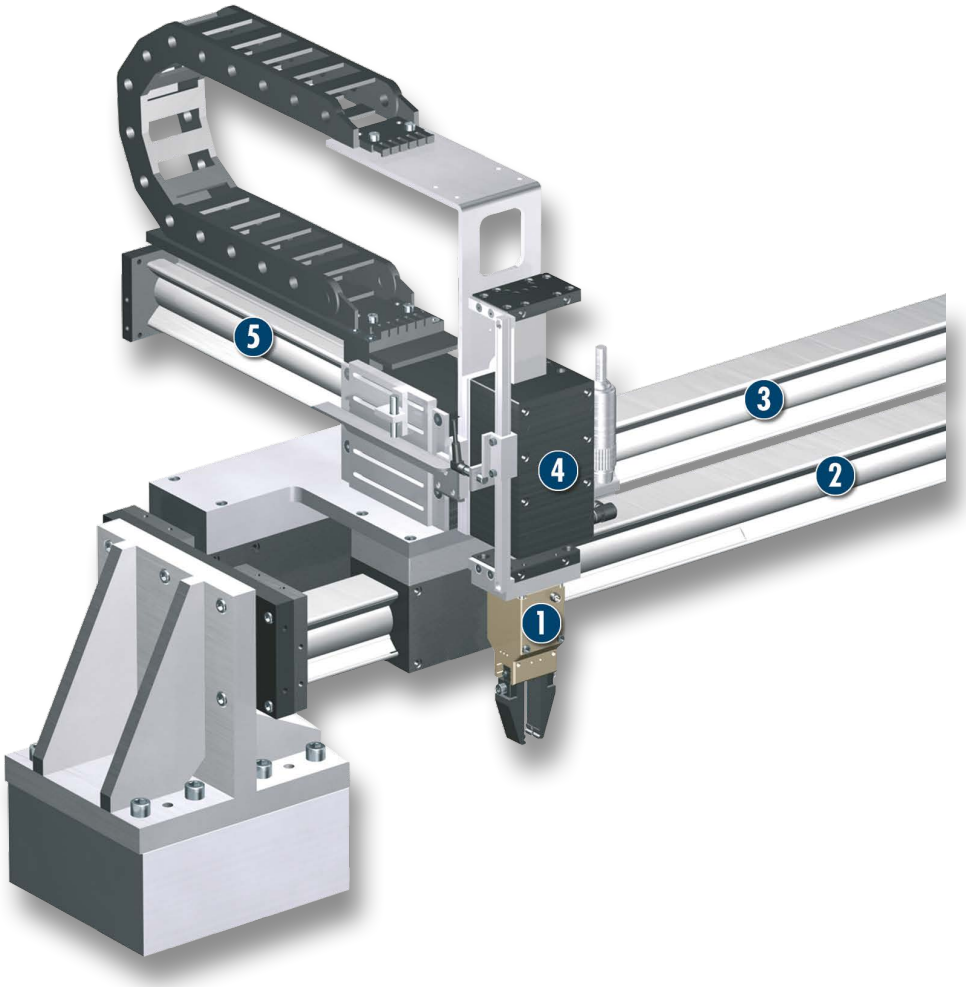


**Fully electrically driven, triple-axis automatic insertion unit for small components**

1. MEG servo-electric 2-Finger Parallel Gripper
2. MLD Linear Motor Drive
3. Support Axis
4. Short-stroke Axis with direct drive MLD Stroke with reference switch
5. Linear axis with direct drive MLD with measuring system

## Gripper for small components

electric 2-finger parallel gripper with smooth-running base jaws guided on roller bearings

## Field of application

gripping and motion of small to medium-sized workpieces with flexible force, stroke or speed

## Your advantages and benefits

**Drive design of step motor**
for independent actuation without pneumatics or hydraulics

**External electronic system**
for control-intensive handling tasks with pre-positioning capability

**Roller guide**
for precise gripping through base jaw guidance with minimum play

**Base jaws guided on double roller bearings**
for low friction and smooth running

**Mounting from two sides in three screw directions possible**
for universal and flexible gripper assembly




## General note to the series

**Principle of function**
Wedge-hook kinematics

**Housing material**
Aluminum alloy, hard-anodized

**Base jaw material**
Steel

**Actuation**
electrically, via step motor or spindle drive

**Warranty**
24 months (details, general terms and conditions and operation manuals can be downloaded under www.schunk.com)

**Scope of delivery**
Centering elements, assembly and operating instruction with manufacturer's declaration.
Finger blanks are not included.
For actuating the gripper, an external control unit MEG-C is required.

## Sectional diagram

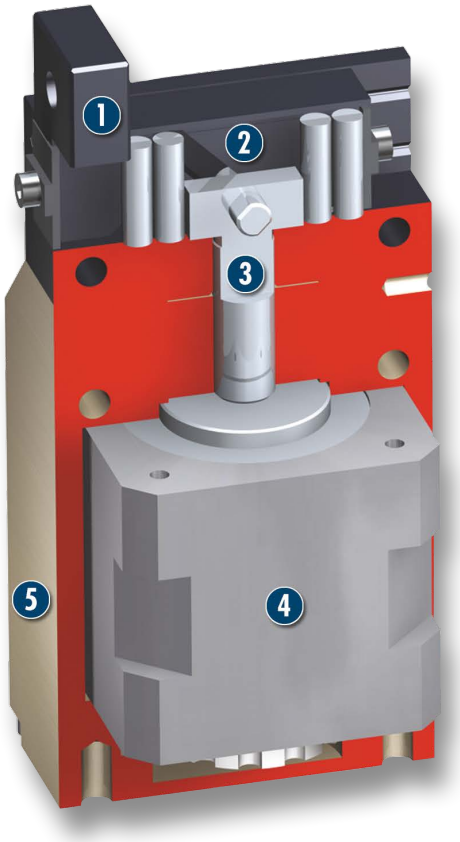


**1 Base jaw**
for the connection of workpiece-specific gripper fingers

**2 Roller guide**
precise gripping through base jaw guide with minimum play

**3 Wedge-hook design**
for high power transmission and centric gripping

**4 Drive**
Step motor with spindle

**5 Housing**
weight-optimized through application of hard-anodized, high-strength aluminum alloy

## Functional description

The spindle is moved upwards or downwards via a step motor drive.
The lateral hooks on top of the spindle guide the angled groove of both base jaws, and this motion transfers into a synchronized opening or closing of the base jaws.

## Options and special information

The electrical control of the MEG EC gripper is done via the appropriate MEG-C control unit.
Via digital and analog inputs the gripper parameters force, position and speed as well as the various operating modes are predefined. The status of the gripper can be monitored via digital and analog outputs.

## Accessories

Accessories from SCHUNK – the suitable supplement for maximum functionality, reliability and performance of all automation modules.

### Centering sleeves



### Inductive proximity switches



### Sensor cables



### Control unit



### Carbide clamping inserts





### Finger blanks



### Plastic inserts



### Gripper pads

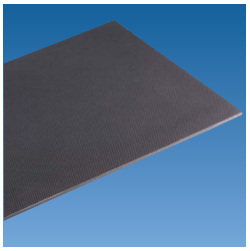

ⓘ For the exact size of the required accessories, availability of this size and the designation and ID, please refer to the additional views at the end of the size in question. You will find more detailed information on our accessory range in the “Accessories” catalog section.

## General note to the series

### Gripping force

is the arithmetic total of the gripping force applied to each finger at distance P (see illustration) measured from the upper edge of the gripper.

### Finger length

The finger length is measured from the upper edge of the gripper housing in the direction of the main axis.

### Repeat accuracy

is defined as the spread of the limit position after 100 consecutive strokes.

### Workpiece weight

The recommended workpiece weight is calculated for a force-type connection with a coefficient of friction of 0.1 and a safety factor of 2 against slippage of the workpiece on acceleration due to gravity g. Considerably heavier workpiece weights are permitted with form-fit gripping.

### Currents

The indicated nominal currents can be actuated permanently. With regard to all the currents which are ranging above the nominal current up to the maximum current, the notes of the individual product documentation has to be respected.

# MEG 40

**Electrical • 2-Finger Parallel Gripper • Gripper for small components**

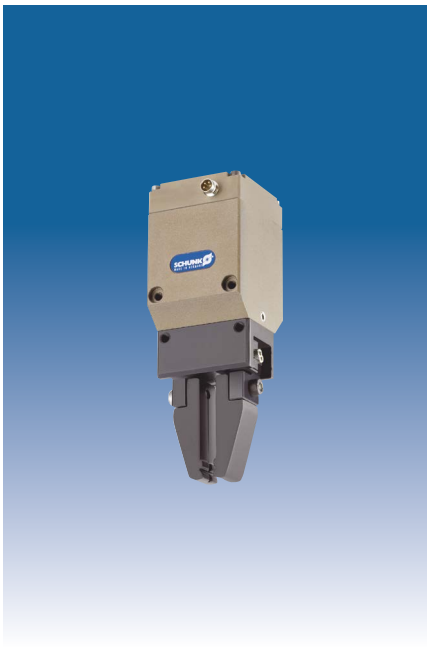

## Gripping force

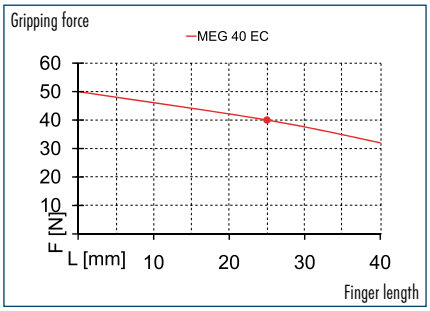


## Finger load

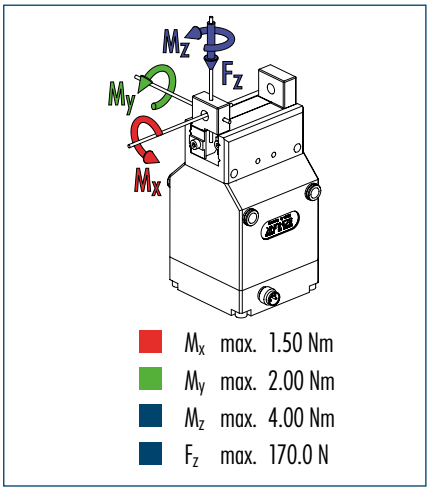


ⓘ The indicated moments and forces are static values, apply per base jaw and may occur simultaneously. $M_y$ may arise in addition to the moment generated by the gripping force itself. If the max. permitted finger weight is exceeded, it is imperative to throttle the air pressure so that the jaw movement occurs without any hitting or bouncing. Service life may be reduced.

## Technical data

| Description | | MEG 40 EC |
|---|---|---|
| **ID** | | **0306008** |
| **General technical data gripper** | | |
| Stroke per finger | [mm] | 6 |
| Minimum/maximum gripping force | [N] | 35/40 |
| Weight | [kg] | 0.47 |
| Recommended workpiece weight | [kg] | 0.3 |
| Max. permitted finger length | [mm] | 40 |
| Max. permitted weight per finger | [kg] | 0.08 |
| IP class | | 30 |
| Min./max. ambient temperature | [°C] | 5/55 |
| Repeat accuracy | [mm] | 0.02 |
| Maximum speed | [mm/s] | 9.5 |
| **Electrical operating data gripper** | | |
| Power supply | [V DC] | 24 |
| Nominal current | [A] | 0.6 |
| Max. total current | [A] | 0.6 |
| **Controller operating data** | | |
| Description | | **MEG-C-40** |
| ID | | **0307004** |
| Implementation | | external |
| Power supply | [V DC] | 24 |
| Field bus interface | | I/O |
| Parametrized interface | | |

## Main view

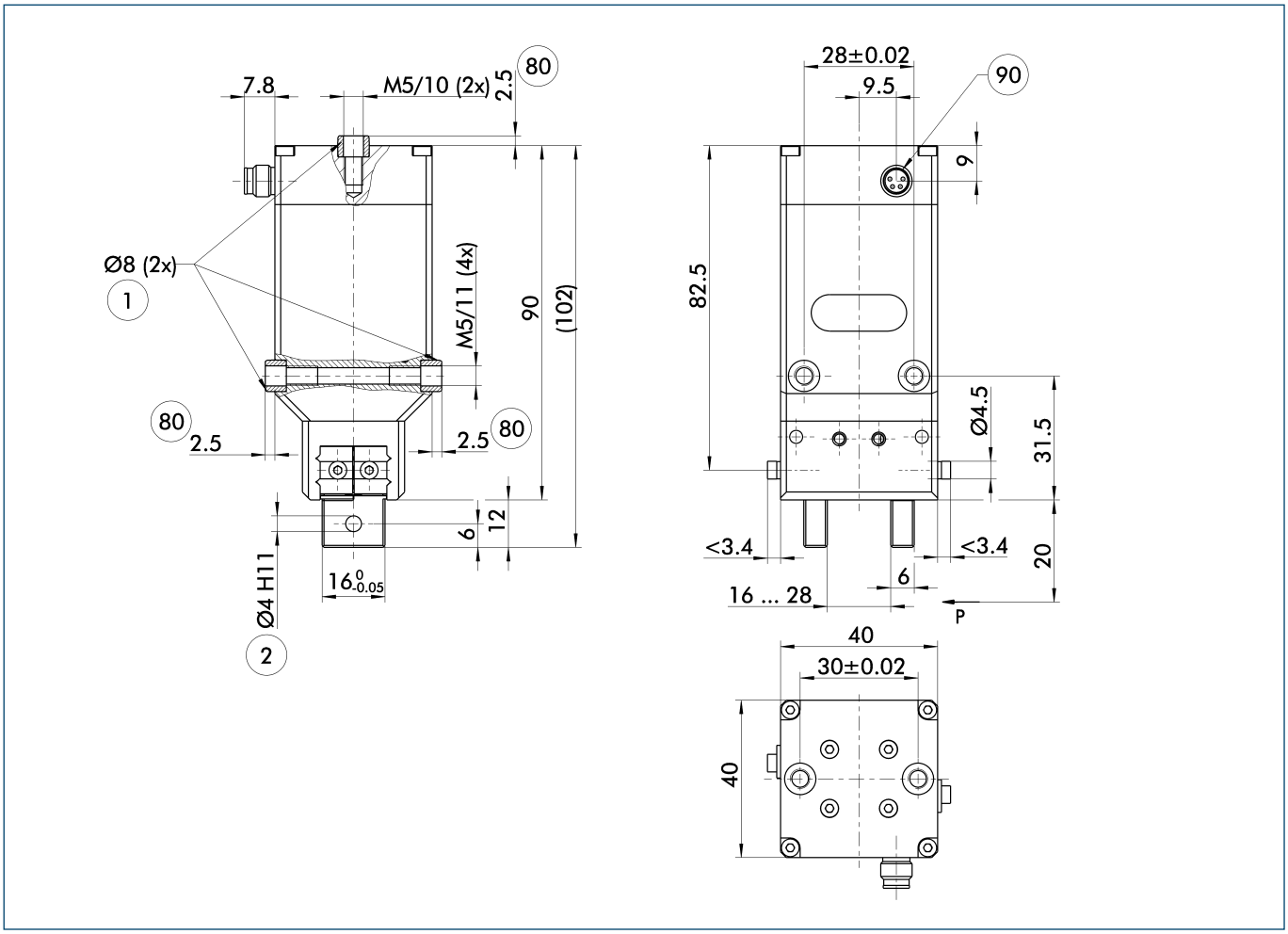


The drawing shows the gripper in the basic version with closed jaws, the dimensions do not include the options described below.

① Gripper connection
② Finger connection
80 Depth of the centering sleeve hole in the matching part
90 4-pin connector M8x1 Woodhead Type 0908 047EM 04005

## Finger blanks

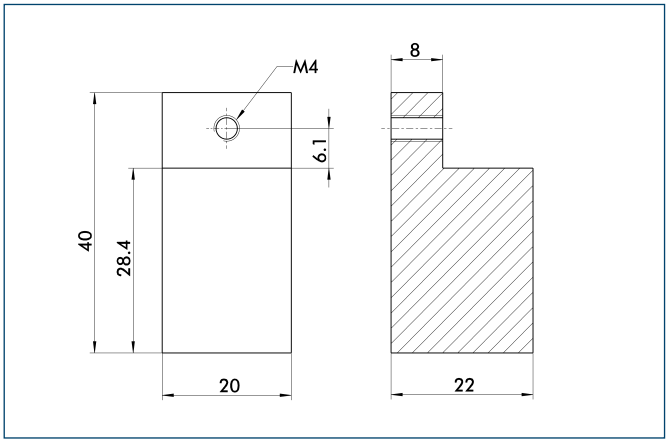


Finger blanks for customized subsequent machining

| Description | ID | Material | Scope of delivery |
|---|---|---|---|
| Finger blanks | | | |
| ABR 40 | **0340213** | Aluminum | 2 |

You can find more detailed information and individual parts of the above-mentioned accessories in the “Accessories” catalog section.

## Connection cables

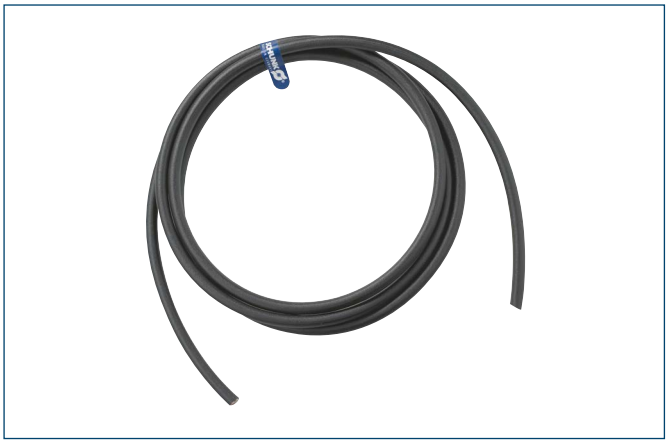

| Description | ID | Length |
|---|---|---|
| Connection cables | | |
| KA BG08-L 4P-0500 | **0307767** | 5 m |
| KA BG08-L 4P-1000 | **0307768** | 10 m |
| KA BW08-L 4P-0500 | **0307765** | 5 m |
| KA BW08-L 4P-1000 | **0307766** | 10 m |

ⓘ Please note the minimum permitted bending radii for the sensor cables, which are generally 35 mm.

You can find more detailed information and individual parts of the above-mentioned accessories in the “Accessories” catalog section.

# MEG 50

**Electrical • 2-Finger Parallel Gripper • Gripper for small components**

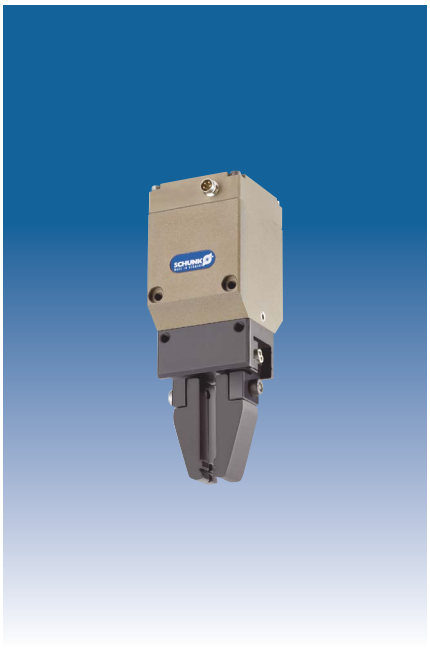

## Gripping force

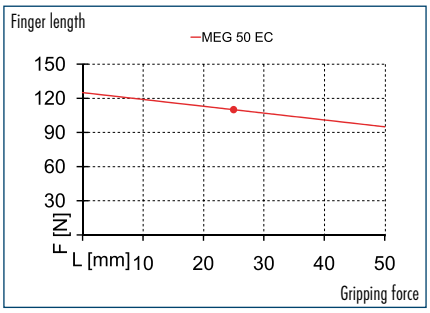


## Finger load

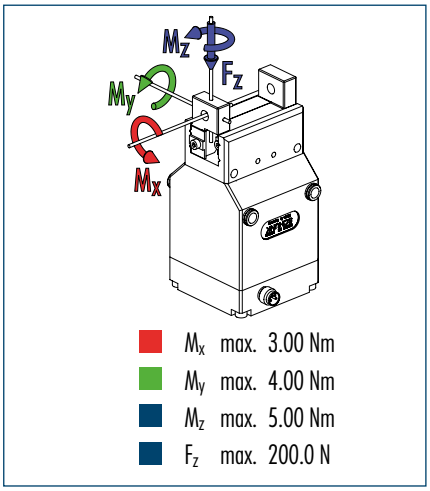


ⓘ The indicated moments and forces are static values, apply per base jaw and may occur simultaneously. $M_y$ may arise in addition to the moment generated by the gripping force itself. If the max. permitted finger weight is exceeded, it is imperative to throttle the air pressure so that the jaw movement occurs without any hitting or bouncing. Service life may be reduced.

## Technical data

| Description | | MEG 50 EC |
|---|---|---|
| **ID** | | **0306010** |
| **General technical data gripper** | | |
| Stroke per finger | [mm] | 8 |
| Minimum/maximum gripping force | [N] | 60/110 |
| Weight | [kg] | 0.71 |
| Recommended workpiece weight | [kg] | 0.55 |
| Max. permitted finger length | [mm] | 50 |
| Max. permitted weight per finger | [kg] | 0.14 |
| IP class | | 30 |
| Min./max. ambient temperature | [°C] | 5/55 |
| Repeat accuracy | [mm] | 0.02 |
| Maximum speed | [mm/s] | 35 |
| **Electrical operating data gripper** | | |
| Power supply | [V DC] | 24 |
| Nominal current | [A] | 0.9 |
| Max. total current | [A] | 0.9 |
| **Controller operating data** | | |
| Description | | **MEG-C-50** |
| ID | | **0307005** |
| Implementation | | external |
| Power supply | [V DC] | 24 |
| Field bus interface | | I/O |
| Parametrized interface | | |

## Main view

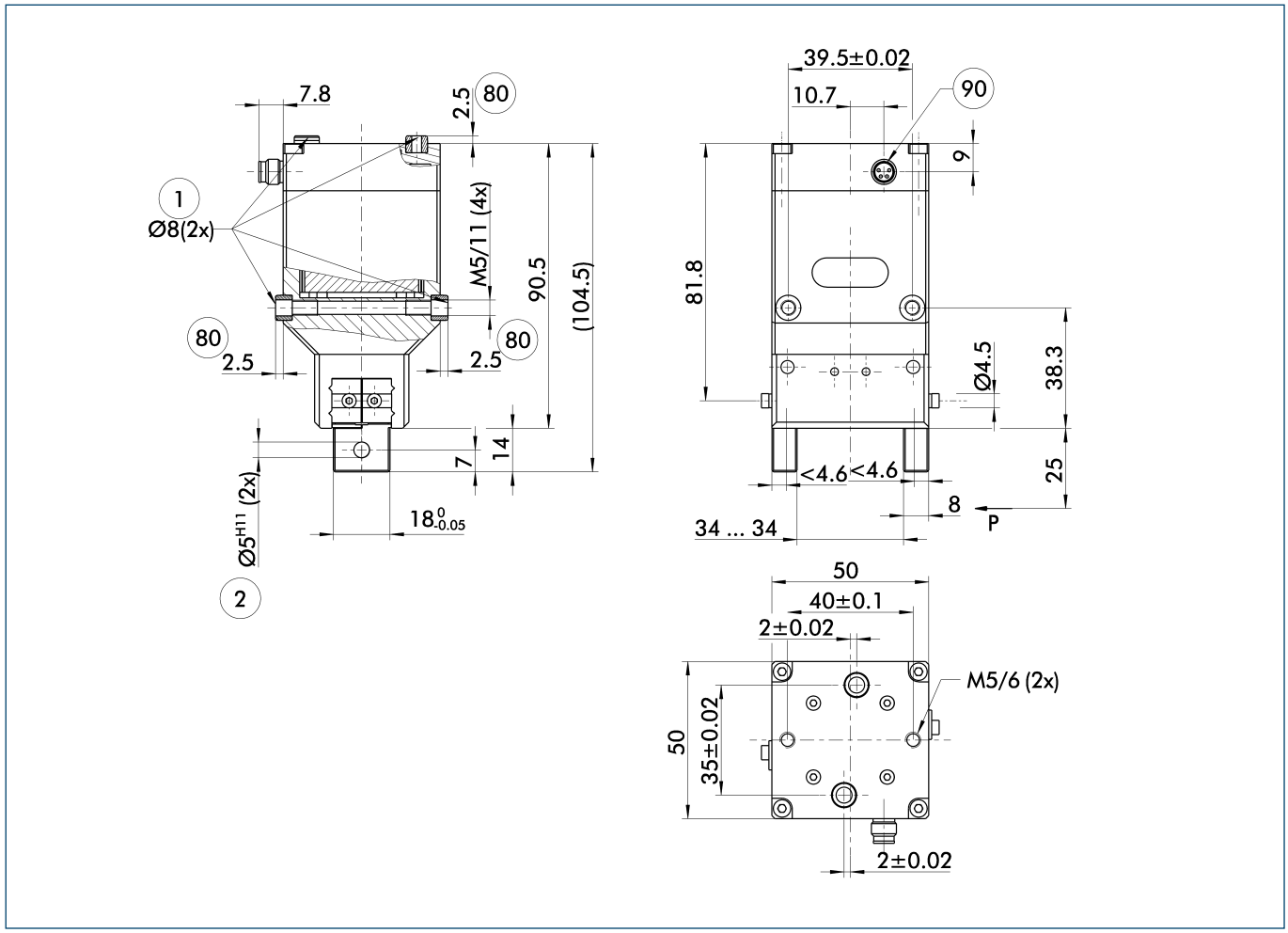


The drawing shows the gripper in the basic version with closed jaws, the dimensions do not include the options described below.

① Gripper connection
② Finger connection
80 Depth of the centering sleeve hole in the matching part
90 4-pin connector M8x1 Woodhead Type 0908 047EM 04005

## Finger blanks

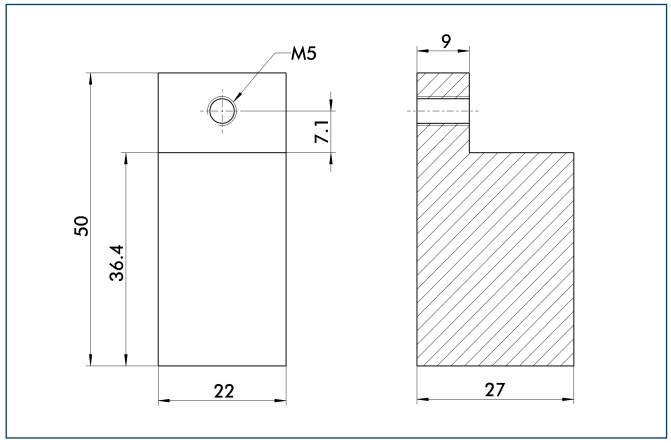


Finger blanks for customized subsequent machining

| Description | ID | Material | Scope of delivery |
|---|---|---|---|
| Finger blanks | | | |
| ABR 50 | **0340214** | Aluminum | 2 |

You can find more detailed information and individual parts of the above-mentioned accessories in the “Accessories” catalog section.

## Connection cables

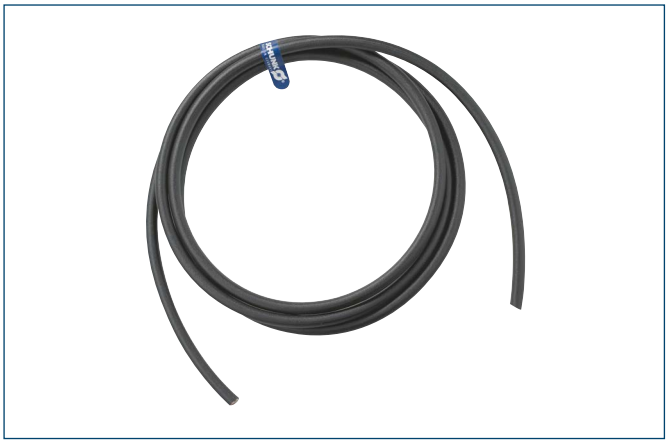

| Description | ID | Length |
|---|---|---|
| Connection cables | | |
| KA BG08-L 4P-0500 | **0307767** | 5 m |
| KA BG08-L 4P-1000 | **0307768** | 10 m |
| KA BW08-L 4P-0500 | **0307765** | 5 m |
| KA BW08-L 4P-1000 | **0307766** | 10 m |

ⓘ Please note the minimum permitted bending radii for the sensor cables, which are generally 35 mm.

You can find more detailed information and individual parts of the above-mentioned accessories in the “Accessories” catalog section.

# MEG 64

**Electrical • 2-Finger Parallel Gripper • Gripper for small components**

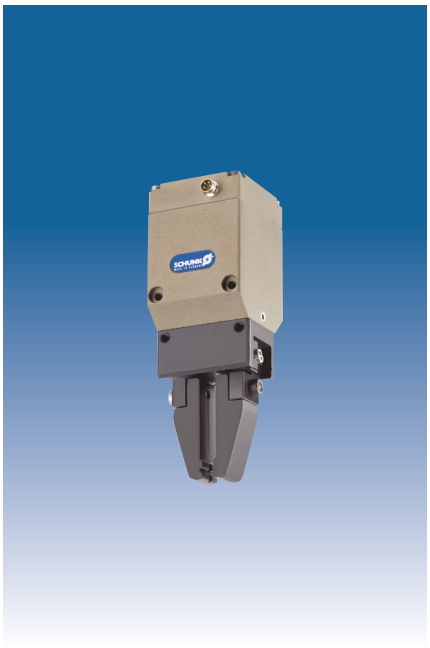

## Gripping force

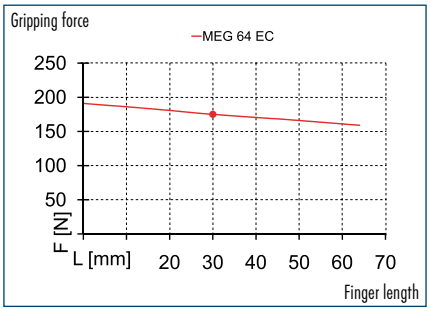


## Finger load

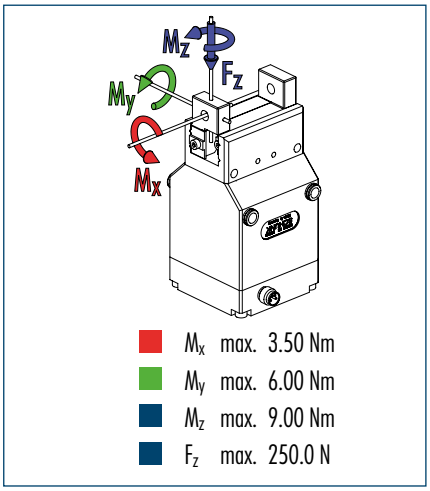


ⓘ The indicated moments and forces are static values, apply per base jaw and may occur simultaneously. $M_y$ may arise in addition to the moment generated by the gripping force itself. If the max. permitted finger weight is exceeded, it is imperative to throttle the air pressure so that the jaw movement occurs without any hitting or bouncing. Service life may be reduced.

## Technical data

| Description | | MEG 64 EC |
|---|---|---|
| **ID** | | **0306012** |
| **General technical data gripper** | | |
| Stroke per finger | [mm] | 10 |
| Minimum/maximum gripping force | [N] | 40/175 |
| Weight | [kg] | 1.42 |
| Recommended workpiece weight | [kg] | 0.85 |
| Max. permitted finger length | [mm] | 64 |
| Max. permitted weight per finger | [kg] | 0.24 |
| IP class | | 30 |
| Min./max. ambient temperature | [°C] | 5/55 |
| Repeat accuracy | [mm] | 0.02 |
| Maximum speed | [mm/s] | 17 |
| **Electrical operating data gripper** | | |
| Power supply | [V DC] | 24 |
| Nominal current | [A] | 1.3 |
| Max. total current | [A] | 1.3 |
| **Controller operating data** | | |
| Description | | **MEG-C-64** |
| ID | | **0307006** |
| Implementation | | external |
| Power supply | [V DC] | 24 |
| Field bus interface | | I/O |
| Parametrized interface | | |

## Main view

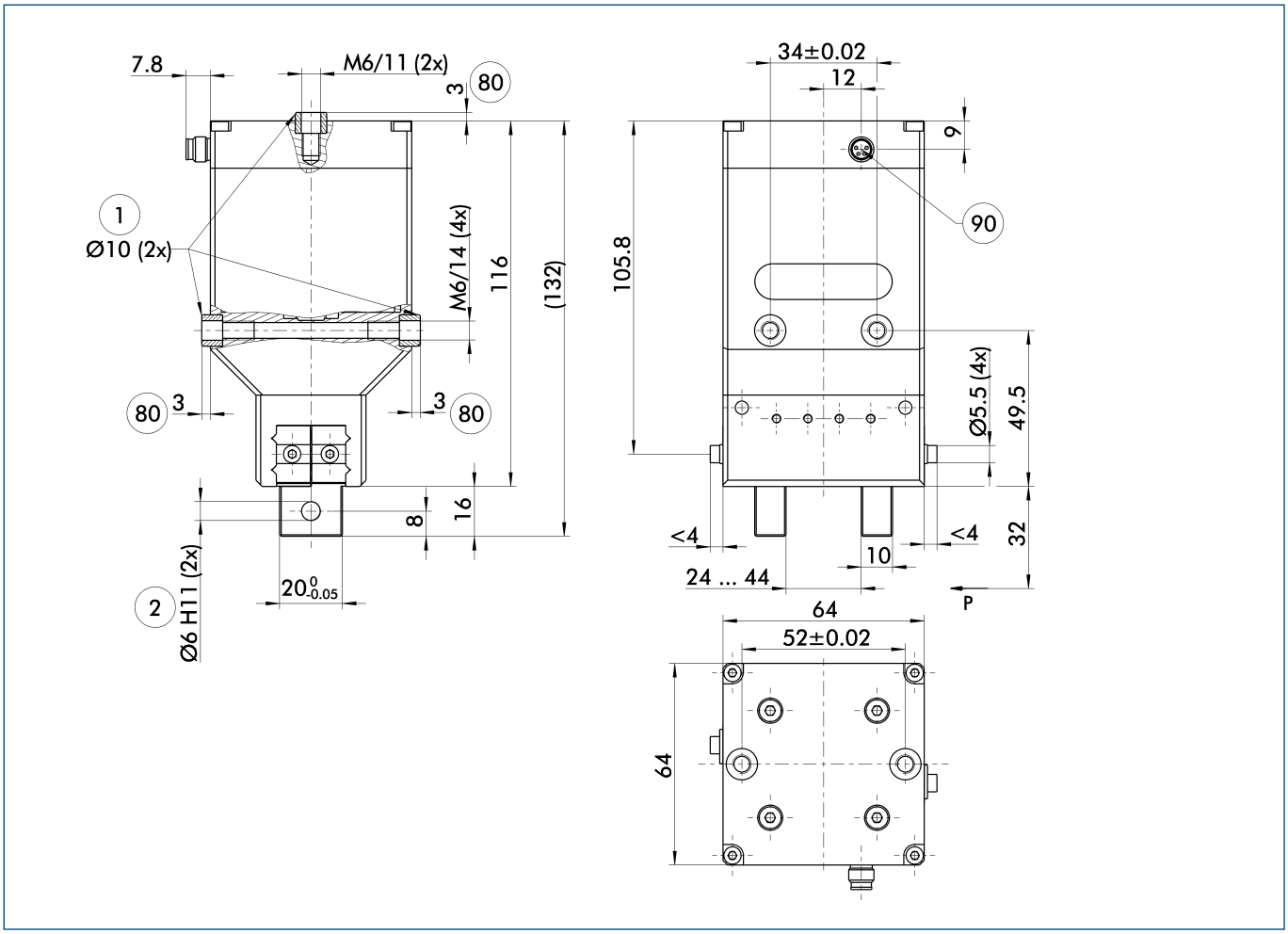


The drawing shows the gripper in the basic version with closed jaws, the dimensions do not include the options described below.

① Gripper connection
② Finger connection
80 Depth of the centering sleeve hole in the matching part
90 4-pin connector M8x1 Woodhead Type 0908 047EM 04005

## Finger blanks

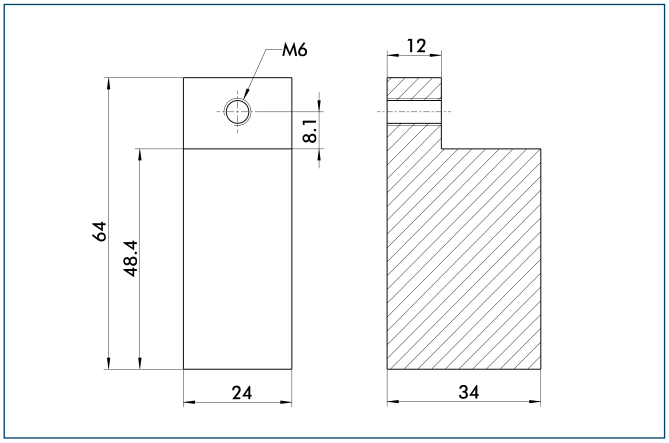


Finger blanks for customized subsequent machining

| Description | ID | Material | Scope of delivery |
|---|---|---|---|
| Finger blanks | | | |
| ABR 64 | 0340215 | Aluminum | 2 |

You can find more detailed information and individual parts of the above-mentioned accessories in the “Accessories” catalog section.

## Connection cables

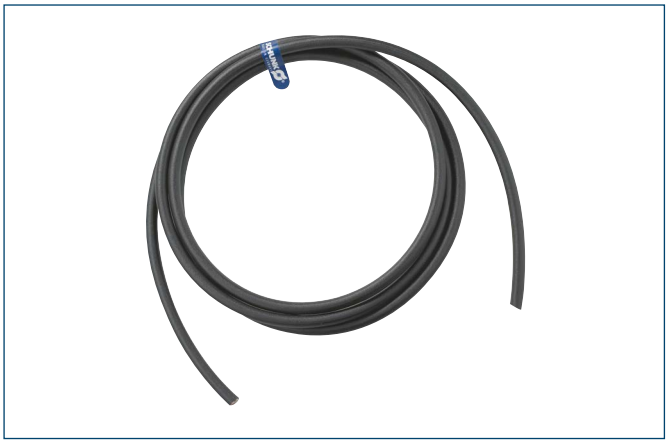

| Description | ID | Length |
|---|---|---|
| Connection cables | | |
| KA BG08-L 4P-0500 | **0307767** | 5 m |
| KA BG08-L 4P-1000 | **0307768** | 10 m |
| KA BW08-L 4P-0500 | **0307765** | 5 m |
| KA BW08-L 4P-1000 | **0307766** | 10 m |

ⓘ Please note the minimum permitted bending radii for the sensor cables, which are generally 35 mm.

You can find more detailed information and individual parts of the above-mentioned accessories in the “Accessories” catalog section.

# EGN

**Electrical • 2-Finger Parallel Gripper • Universal Gripper**

**Sizes**
80 ... 160

**Weight**
0.84 kg ... 3 kg

**Gripping force**
400 N ... 1000 N

**Stroke per finger**
8 mm ... 16 mm

**Workpiece weight**
2.1 kg ... 5.4 kg

## Application example

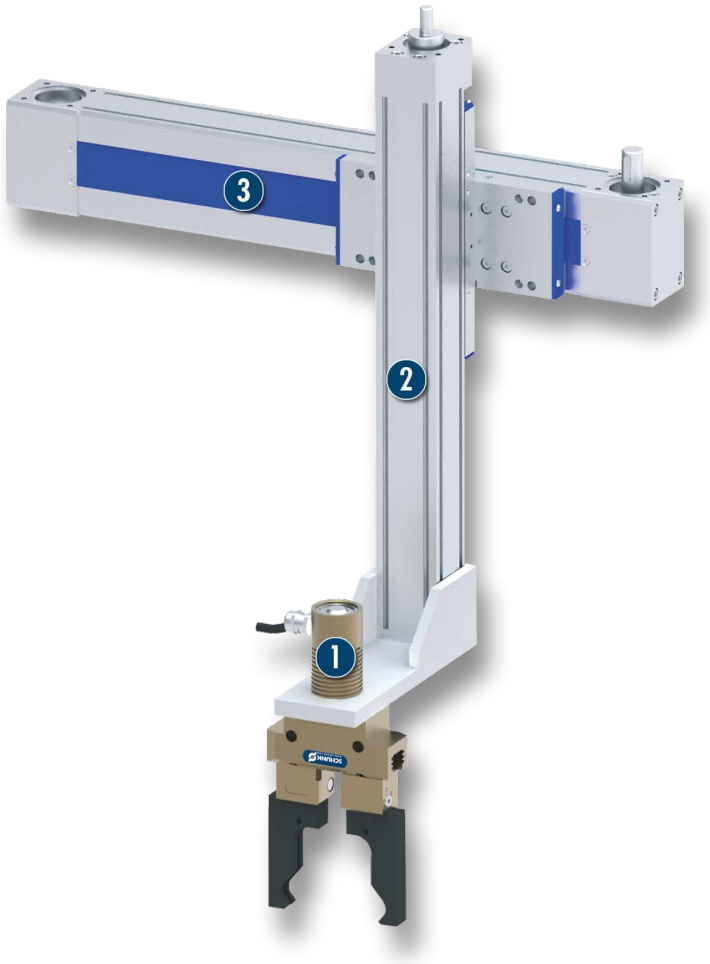


**Completely electrically actuated gantry axis for palletizing and depalletizing different components with an enormous variance.**

1. EGN Servo-electric 2-Finger Parallel Gripper
2. Vertical axis with spindle drive HSB Beta
3. Belt-driven axes HSB Beta

## Universal Gripper

servo-electric 2-finger parallel gripper with high gripping force and moment loads thanks to the multi-tooth guidance

## Field of application

Ideal standard solution for numerous fields of application. Highly versatile thanks to controlled gripping force, position and speed.

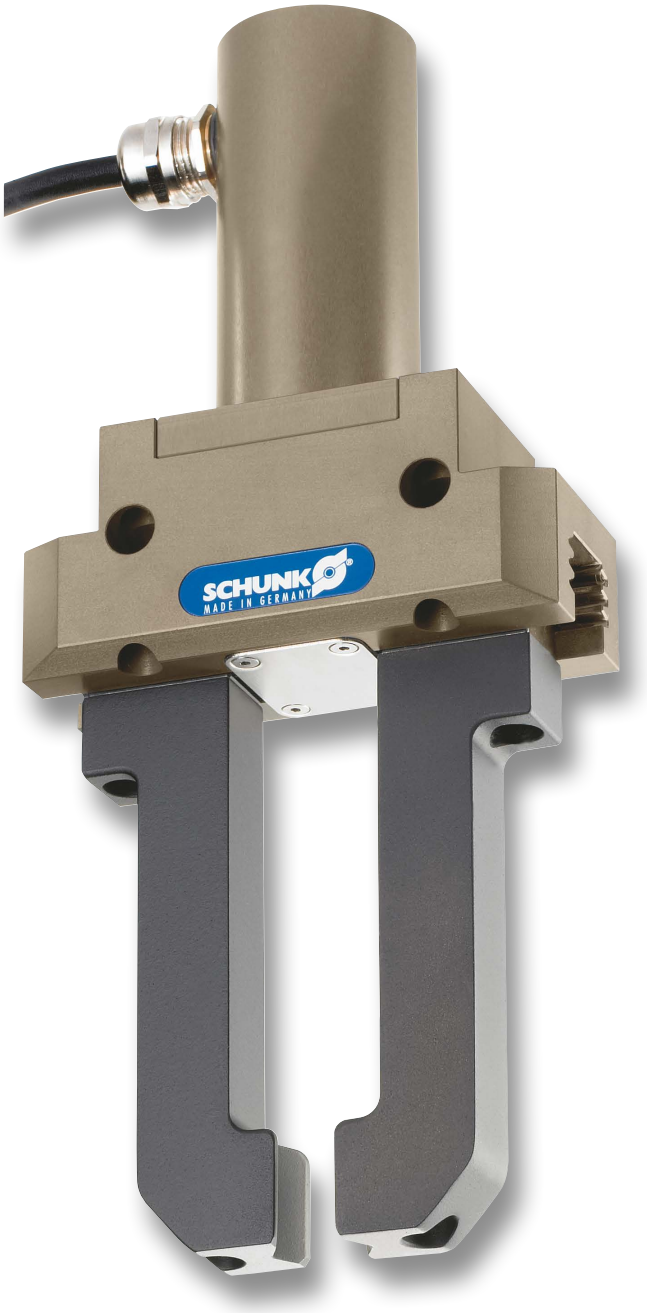


## Your advantages and benefits

**Drive design of servo-motor**
for flexible use

**with external electronics**
for simple integration in existing servo-controlled concepts via Profibus-DP, CAN-Bus

**Pre-positioning capability**
to reduce cycle times through a short working stroke

**Robust multi-tooth guidance**
for precise handling

**High maximum moments possible**
suitable for using long gripper fingers

**Mounting from two sides in three screw directions possible**
for universal and flexible gripper assembly

## General note to the series

**Principle of function**
Wedge-hook kinematics

**Housing material**
Aluminum alloy, hard-anodized

**Base jaw material**
Steel

**Actuation**
electrically, via step motor or spindle drive

**Warranty**
24 months (details, general terms and conditions and operation manuals can be downloaded under www.schunk.com)

**Scope of delivery**
CD-ROM with SCHUNK software and assistant for commissioning, includes assembly- and operation manual, declaration of incorporation, enclosed pack with centering sleeves, functional module for control via Siemens S7-300/400. Finger blanks are not included.
For actuating the gripper, an external control unit is required.

## Sectional diagram

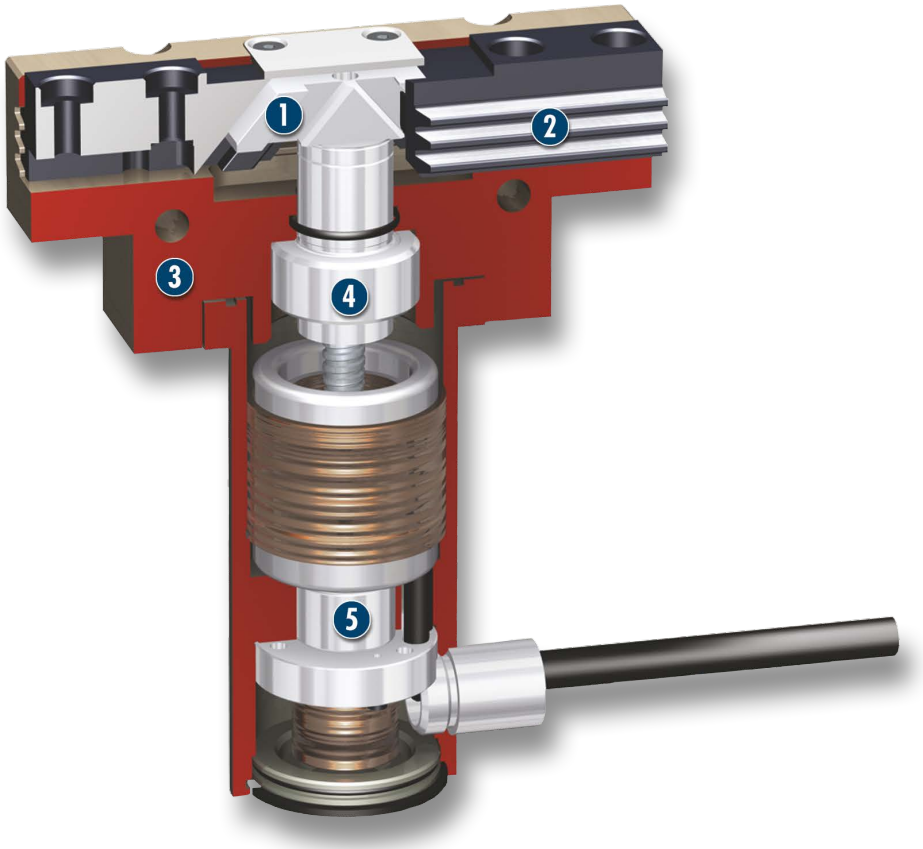


**1 Wedge-hook design**
for high power transmission and centric gripping

**2 Multiple-tooth guidance**
precise gripping even with longer gripper fingers due to high-amperage scope-free base jaw guidance

**3 Housing**
weight-optimized through application of hard-anodized, high-strength aluminum alloy

**4 Spindle nut**
transforms the rotational movement into the axial movement of the wedge hook

**5 Drive**
CD servo-motor with resolver

## Functional description

The spindle nut which is mounted on bearings, transfers the rotary motion of the servo-motor into an axial motion.
Through its angled active surfaces, the wedge hook transforms this movement into the lateral, synchronous gripping movement of both base jaws.

## Options and special information

The electric control of the EGN gripper is carried out by the appropriate MSC-12 control electronics. Integration of it into a higher-ranking control program can be done via the communication interfaces Profibus, CAN-Bus or conventional inputs/outputs.
For Bus communication, the SCHUNK Motion Protocol (SMP) is used. It allows the set-up of industrial Bus topologies and simplifies integration into the control system.
If integration takes place simply by terminal signals, preprogrammed parameters can be called off via digital inputs. The gripper status can be monitored via digital outputs or via a Feldbus.

## Accessories

Accessories from SCHUNK – the suitable supplement for maximum functionality, reliability and performance of all automation modules.

### Centering sleeves



### Finger blanks



### Quick-change Jaw System



### Force measuring jaws



### Protection cover






### Control unit



ⓘ For the exact size of the required accessories, availability of this size and the designation and ID, please refer to the additional views at the end of the size in question. You will find more detailed information on our accessory range in the “Accessories” catalog section.

## General note to the series

### Gripping force

is the arithmetic total of the gripping force applied to each finger at distance P (see illustration) measured from the upper edge of the gripper.

### Finger length

The finger length is measured from the upper edge of the gripper housing in the direction of the main axis.

### Repeat accuracy

is defined as the spread of the limit position after 100 consecutive strokes.

### Workpiece weight

The recommended workpiece weight is calculated for a force-type connection with a coefficient of friction of 0.1 and a safety factor of 2 against slippage of the workpiece on acceleration due to gravity g. Considerably heavier workpiece weights are permitted with form-fit gripping.

### Currents

The indicated nominal currents can be actuated permanently. With regard to all the currents which are ranging above the nominal current up to the maximum current, the notes of the individual product documentation has to be respected.

# EGN 80

## Electrical • 2-Finger Parallel Gripper • Universal Gripper



### Gripping force

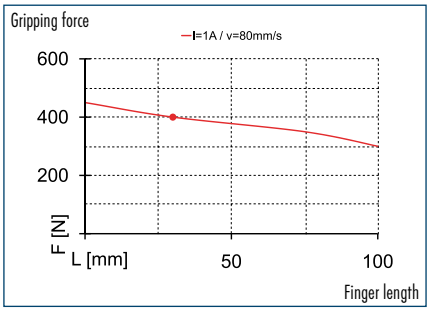


### Speed

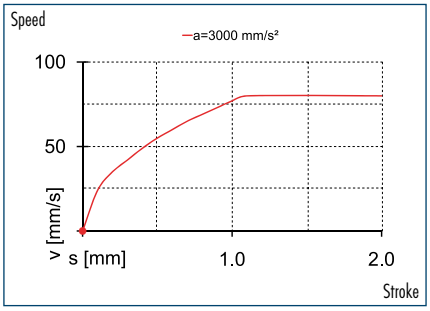


### Finger load

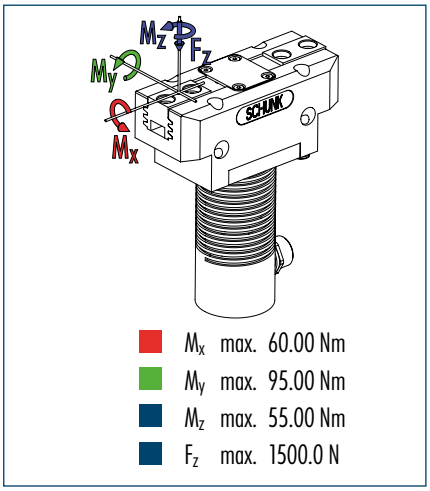


ⓘ The indicated moments and forces are static values, apply per base jaw and may occur simultaneously. $M_y$ may arise in addition to the moment generated by the gripping force itself. If the max. permitted finger weight is exceeded, it is imperative to throttle the air pressure so that the jaw movement occurs without any hitting or bouncing. Service life may be reduced.

## Technical data

| Description | | EGN 80 |
|---|---|---|
| **ID** | | **0306100** |
| **General technical data gripper** | | |
| Stroke per finger | [mm] | 8 |
| Minimum/maximum gripping force | [N] | 170/400 |
| Weight | [kg] | 0.84 |
| Recommended workpiece weight | [kg] | 2.1 |
| Max. permitted finger length | [mm] | 100 |
| Max. permitted weight per finger | [kg] | 0.6 |
| IP class | | 41 |
| Min./max. ambient temperature | [°C] | 5/55 |
| Repeat accuracy | [mm] | 0.01 |
| Maximum speed | [mm/s] | 80 |
| Maximum acceleration | [mm/s²] | 3000 |
| **Electrical operating data gripper** | | |
| Power supply | [V DC] | 24 |
| Nominal current | [A] | 1 |
| Max. total current | [A] | 4 |
| Resolution | [Inc/U] | 10 |
| **Controller operating data** | | |
| Description | | **MCS-12 (EGN/EZN)** |
| ID | | **0307010** |
| Implementation | | external |
| Power supply | [V DC] | 24 |
| Field bus interface | | CAN / PROFIBUS / I/O |
| Parametrized interface | | CAN / PROFIBUS / RS232 |

## Main view

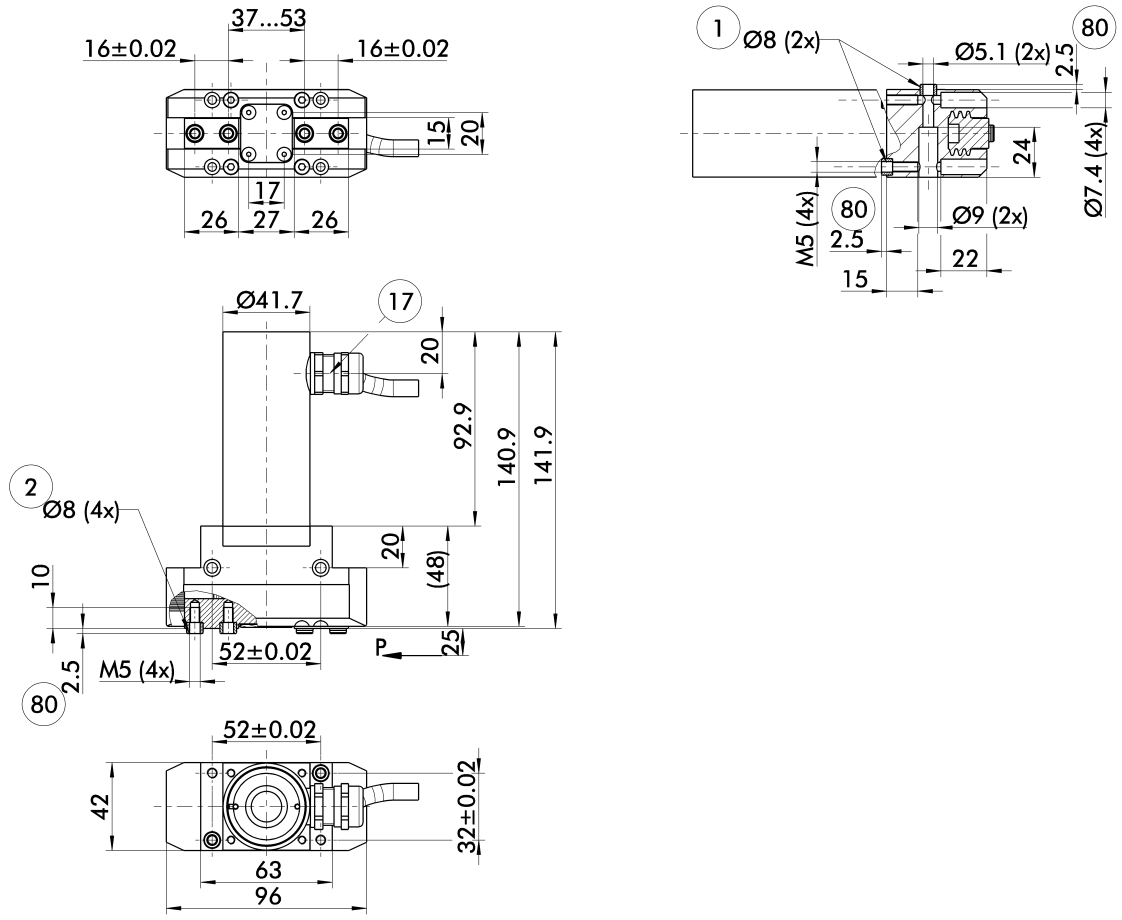


The drawing shows the gripper in the basic version with closed jaws, the dimensions do not include the options described below.

① Gripper connection
② Finger connection
⑰ Cable outlet
⑧⓪ Depth of the centering sleeve hole in the matching part

## Maximum permitted finger projection

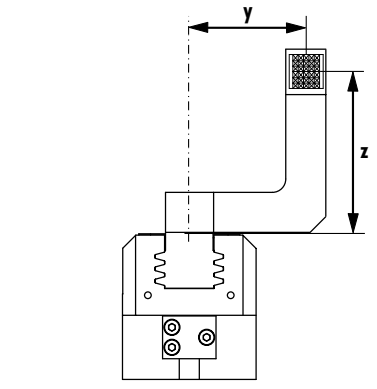


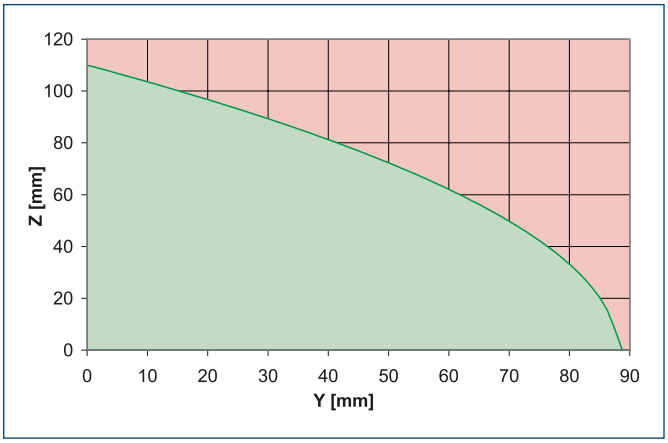


Permitted range
Inadmissible range

The curve applies to the basic version (stroke -1). For other versions, the curve will be parallel but offset in line with the max. permitted finger length.

## Quick-change Jaw System

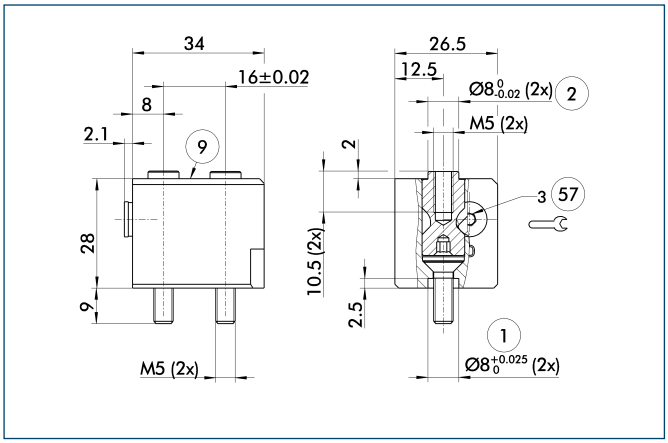


① Gripper connection
② Finger connection
⑨ For mounting screw connection diagram, see basic version
57 Locking

The BSWS quick-change jaw system enables top jaws to be changed on the gripper manually and rapidly. An adapter (BSWS-A) and a base (BSWS-B) are required for each gripper jaw.
For a reverse assembly without height set-up, one adapter (BSWS-A) and a kit (BSWS-U) per gripper jaw are required. Another effect of the BSWS-U is, that there are no disturbing fastening bores in the finger contour.

| Description | ID |
|---|---|
| Quick-change Jaw System adapter | |
| BSWS-A 80 | **0303024** |
| Quick-change Jaw System base | |
| BSWS-B 80 | **0303025** |

## Universal intermediate jaw

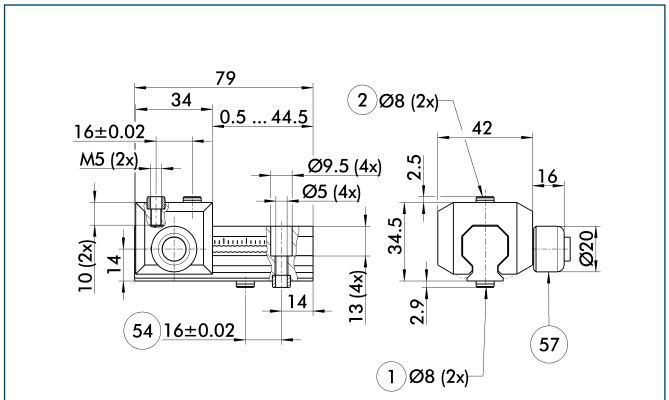


① Gripper connection
② Finger connection
54 Optional right or left connection
57 Locking

The universal intermediate jaw allows fast tool-free and reliable plugging and shifting of top jaws at the gripper.

| Description | ID | Grid dimension |
|---|---|---|
| Universal intermediate jaw | | |
| UZB 80 | **0300043** | 2 mm |
| UZB-S 80 | **5518271** | 2 mm |

ⓘ The slide UZB-S can be removed completely and has to be ordered separately. Moreover, it allows a fast jaw change.

You can find more detailed information and individual parts of the above-mentioned accessories in the “Accessories” catalog section.

## Force measuring jaws

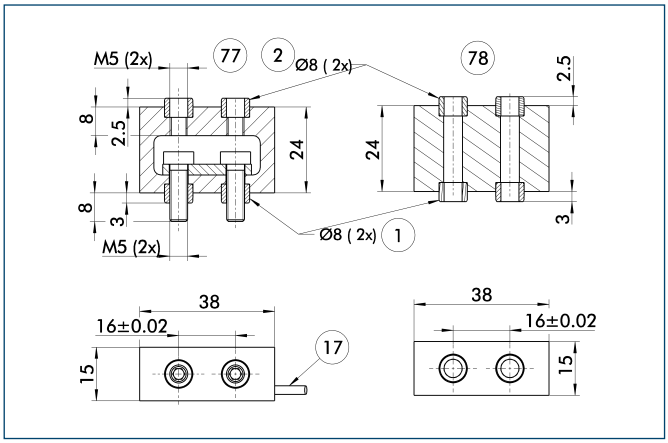


① Gripper connection
② Finger connection
⑰ Cable outlet
⑦⑦ Active intermediate jaws
⑦⑧ Passive intermediate jaws

Force measuring jaws measure gripping forces, but can also determine workpiece weights or dimensional deviations. There are active and passive intermediate jaws (FMS-ZBA or FMS-ZBP). At least one active force measuring jaw is required per gripper, the rest can be passive. For each active jaw, a FMS-A1 control unit and a FMS-A connection cable are required.

| Description | ID |
|---|---|
| Active intermediate jaws | |
| FMS-ZBA 80 | **0301834** |
| Passive intermediate jaws | |
| FMS-ZBP 80 | **0301835** |
| Electronic Processor | |
| FMS-A1 | **0301810** |
| Connection cables | |
| FMS-AK0200 | **0301820** |
| FMS-AK0500 | **0301821** |
| FMS-AK1000 | **0301822** |
| FMS-AK2000 | **0301823** |

## Finger blanks

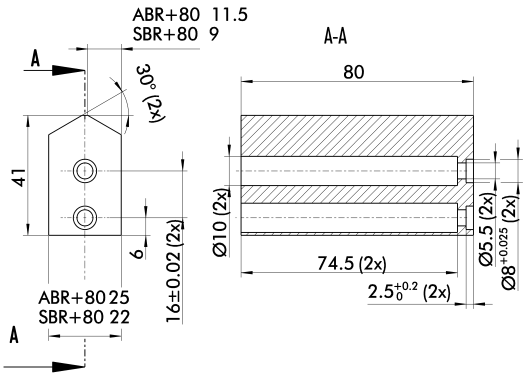


Finger blanks for customized subsequent machining

| Description | ID | Material | Scope of delivery |
|---|---|---|---|
| Finger blanks | | | |
| ABR-plus 80 | **0300011** | Aluminum | 1 |
| SBR-plus 80 | **0300021** | 16 MnCr 5 | 1 |

You can find more detailed information and individual parts of the above-mentioned accessories in the “Accessories” catalog section.

# EGN 100

**Electrical • 2-Finger Parallel Gripper • Universal Gripper**



## Gripping force

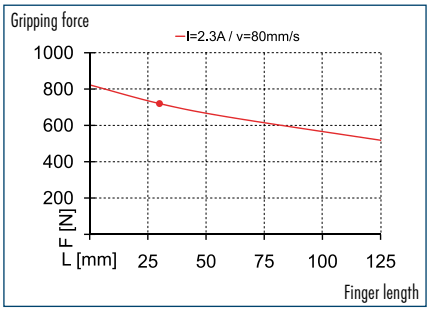


## Speed

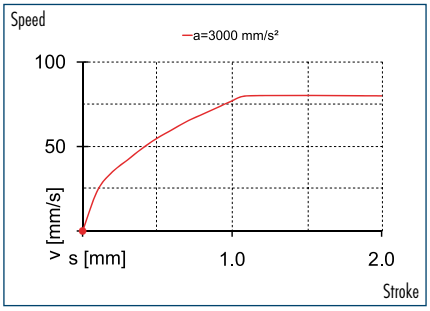


## Finger load

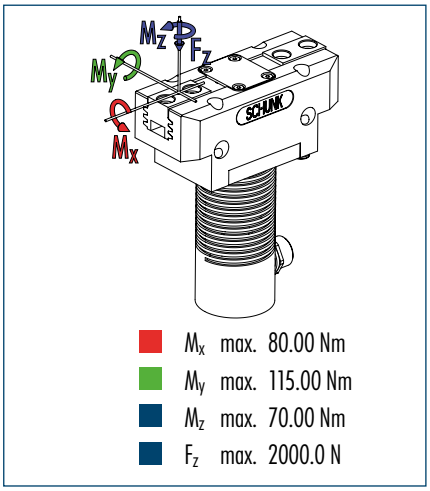


ⓘ The indicated moments and forces are static values, apply per base jaw and may occur simultaneously. $M_y$ may arise in addition to the moment generated by the gripping force itself. If the max. permitted finger weight is exceeded, it is imperative to throttle the air pressure so that the jaw movement occurs without any hitting or bouncing. Service life may be reduced.

## Technical data

| Description | | EGN 100 |
|---|---|---|
| **ID** | | **0306101** |
| **General technical data gripper** | | |
| Stroke per finger | [mm] | 10 |
| Minimum/maximum gripping force | [N] | 170/720 |
| Weight | [kg] | 1.35 |
| Recommended workpiece weight | [kg] | 3.3 |
| Max. permitted finger length | [mm] | 125 |
| Max. permitted weight per finger | [kg] | 1.1 |
| IP class | | 41 |
| Min./max. ambient temperature | [°C] | 5/55 |
| Repeat accuracy | [mm] | 0.01 |
| Maximum speed | [mm/s] | 80 |
| Maximum acceleration | [mm/s²] | 3000 |
| **Electrical operating data gripper** | | |
| Power supply | [V DC] | 24 |
| Nominal current | [A] | 2.3 |
| Max. total current | [A] | 4 |
| Resolution | [Inc/U] | 10 |
| **Controller operating data** | | |
| Description | | **MCS-12 (EGN/EZN)** |
| ID | | **0307010** |
| Implementation | | external |
| Power supply | [V DC] | 24 |
| Field bus interface | | CAN / PROFIBUS / I/O |
| Parametrized interface | | CAN / PROFIBUS / RS232 |

## Main view

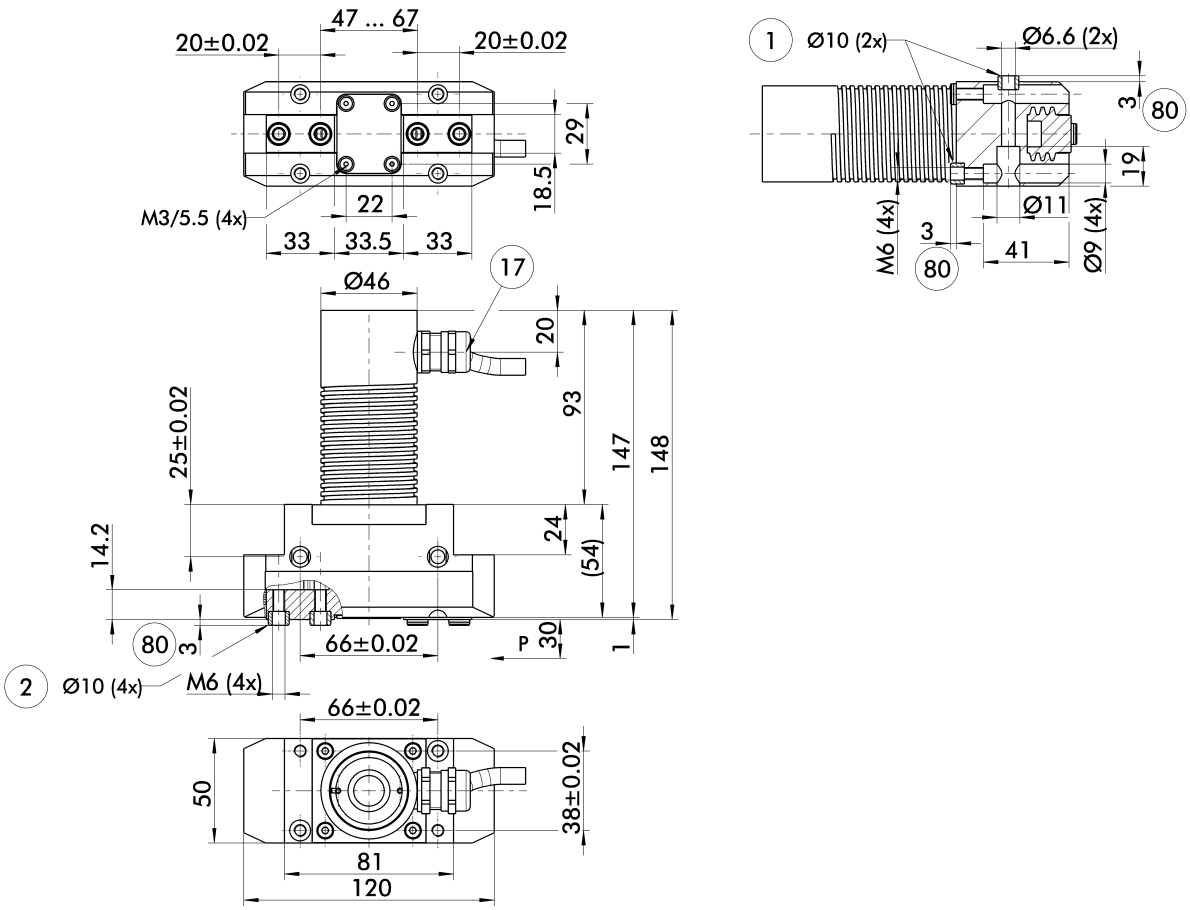


The drawing shows the gripper in the basic version with closed jaws, the dimensions do not include the options described below.

① Gripper connection
② Finger connection
⑰ Cable outlet
⑧⓪ Depth of the centering sleeve hole in the matching part

## Maximum permitted finger projection

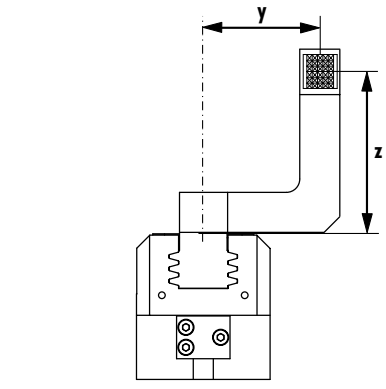


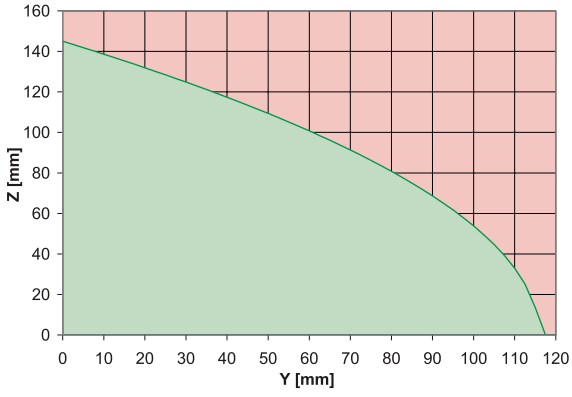


Permitted range
Inadmissible range

The curve applies to the basic version (stroke -1). For other versions, the curve will be parallel but offset in line with the max. permitted finger length.

## Quick-change Jaw System

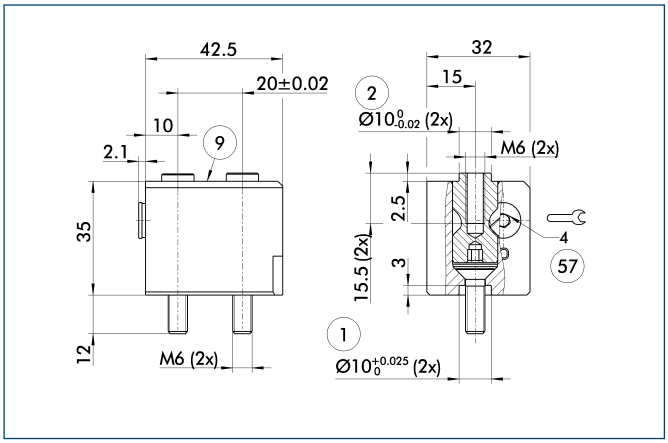


① Gripper connection
② Finger connection
⑨ For mounting screw connection diagram, see basic version
㊼ Locking

The BSWS quick-change jaw system enables top jaws to be changed on the gripper manually and rapidly. An adapter (BSWS-A) and a base (BSWS-B) are required for each gripper jaw.
For a reverse assembly without height set-up, one adapter (BSWS-A) and a kit (BSWS-U) per gripper jaw are required. Another effect of the BSWS-U is, that there are no disturbing fastening bores in the finger contour.

| Description | ID |
|---|---|
| Quick-change Jaw System adapter | |
| BSWS-A 100 | **0303026** |
| Quick-change Jaw System base | |
| BSWS-B 100 | **0303027** |

## Universal intermediate jaw

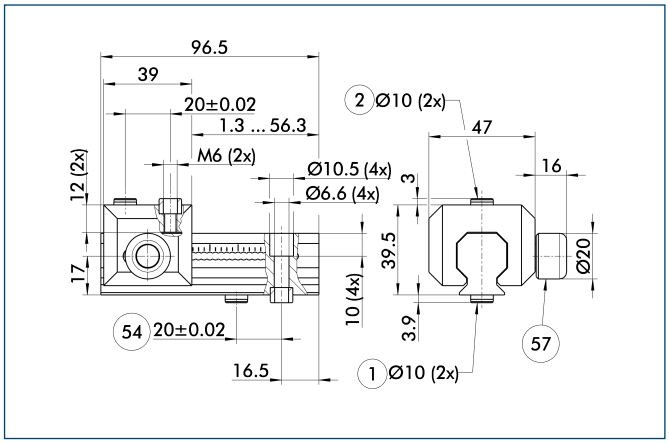


① Gripper connection
② Finger connection
㊹ Optional right or left connection
㊼ Locking

The universal intermediate jaw allows fast tool-free and reliable plugging and shifting of top jaws at the gripper.

| Description | ID | Grid dimension |
|---|---|---|
| Universal intermediate jaw | | |
| UZB 100 | **0300044** | 2.5 mm |
| UZB-S 100 | **5518272** | 2.5 mm |

ⓘ The slide UZB-S can be removed completely and has to be ordered separately. Moreover, it allows a fast jaw change.

You can find more detailed information and individual parts of the above-mentioned accessories in the “Accessories” catalog section.

## Force measuring jaws

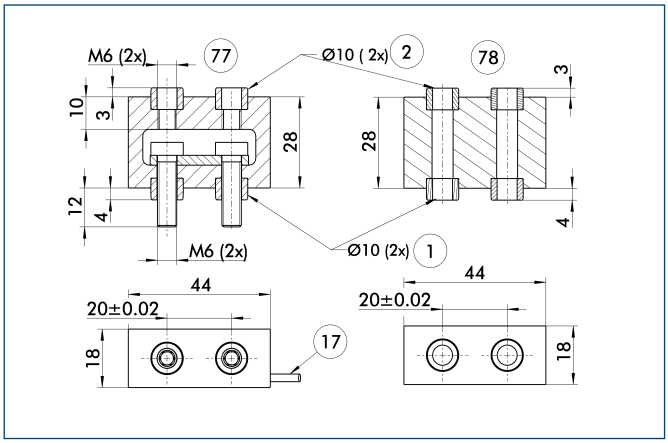


① Gripper connection
② Finger connection
⑰ Cable outlet
⑦⑦ Active intermediate jaws
⑦⑧ Passive intermediate jaws

Force measuring jaws measure gripping forces, but can also determine workpiece weights or dimensional deviations. There are active and passive intermediate jaws (FMS-ZBA or FMS-ZBP). At least one active force measuring jaw is required per gripper, the rest can be passive. For each active jaw, a FMS-A1 control unit and a FMS-A connection cable are required.

| Description | ID |
|---|---|
| Active intermediate jaws | |
| FMS-ZBA 100 | **0301836** |
| Passive intermediate jaws | |
| FMS-ZBP 100 | **0301837** |
| Electronic Processor | |
| FMS-A1 | **0301810** |
| Connection cables | |
| FMS-AK0200 | **0301820** |
| FMS-AK0500 | **0301821** |
| FMS-AK1000 | **0301822** |
| FMS-AK2000 | **0301823** |

## Finger blanks

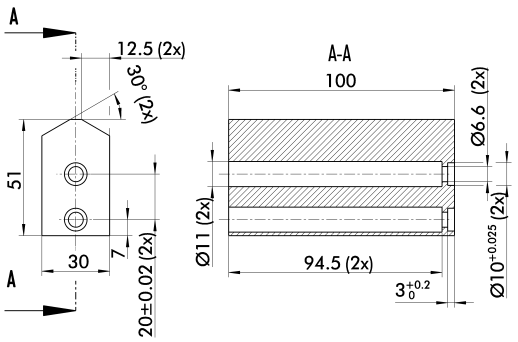


Finger blanks for customized subsequent machining

| Description | ID | Material | Scope of delivery |
|---|---|---|---|
| Finger blanks | | | |
| ABR-plus 100 | **0300012** | Aluminum | 1 |
| SBR-plus 100 | **0300022** | 16 MnCr 5 | 1 |

You can find more detailed information and individual parts of the above-mentioned accessories in the “Accessories” catalog section.

# EGN 160

**Electrical • 2-Finger Parallel Gripper • Universal Gripper**



## Gripping force

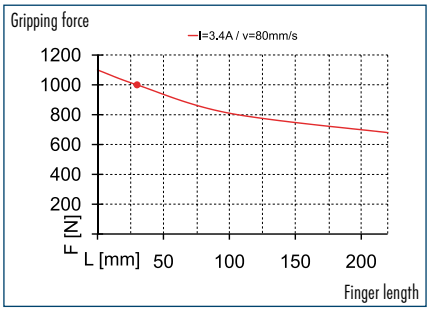


## Speed

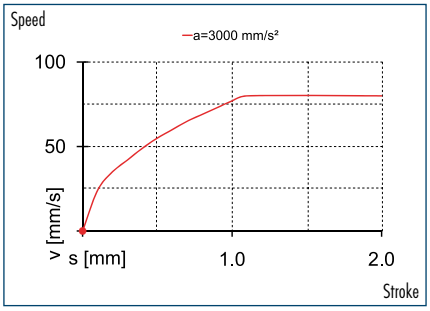


## Finger load

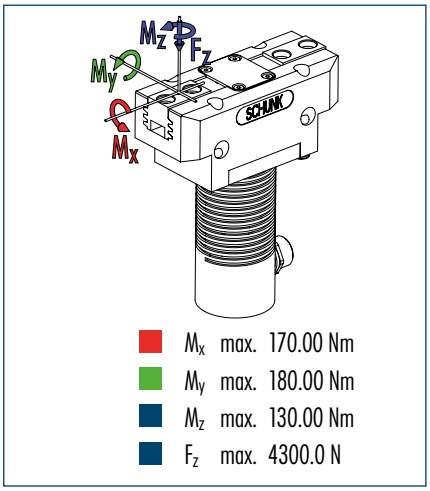


| | |
|---|---|
| $M_x$ | max. 170.00 Nm |
| $M_y$ | max. 180.00 Nm |
| $M_z$ | max. 130.00 Nm |
| $F_z$ | max. 4300.0 N |

ⓘ The indicated moments and forces are static values, apply per base jaw and may occur simultaneously. $M_y$ may arise in addition to the moment generated by the gripping force itself. If the max. permitted finger weight is exceeded, it is imperative to throttle the air pressure so that the jaw movement occurs without any hitting or bouncing. Service life may be reduced.

## Technical data

| Description | | EGN 160 |
|---|---|---|
| **ID** | | **0306102** |
| **General technical data gripper** | | |
| Stroke per finger | [mm] | 16 |
| Minimum/maximum gripping force | [N] | 250/1000 |
| Weight | [kg] | 3 |
| Recommended workpiece weight | [kg] | 5.4 |
| Max. permitted finger length | [mm] | 200 |
| Max. permitted weight per finger | [kg] | 3.5 |
| IP class | | 41 |
| Min./max. ambient temperature | [°C] | 5/55 |
| Repeat accuracy | [mm] | 0.01 |
| Maximum speed | [mm/s] | 80 |
| Maximum acceleration | [mm/s²] | 3000 |
| **Electrical operating data gripper** | | |
| Power supply | [V DC] | 24 |
| Nominal current | [A] | 3.4 |
| Max. total current | [A] | 4 |
| Resolution | [Inc/U] | 10 |
| **Controller operating data** | | |
| Description | | **MCS-12 (EGN/EZN)** |
| ID | | **0307010** |
| Implementation | | external |
| Power supply | [V DC] | 24 |
| Field bus interface | | CAN / PROFIBUS / I/O |
| Parametrized interface | | CAN / PROFIBUS / RS232 |

## Main view

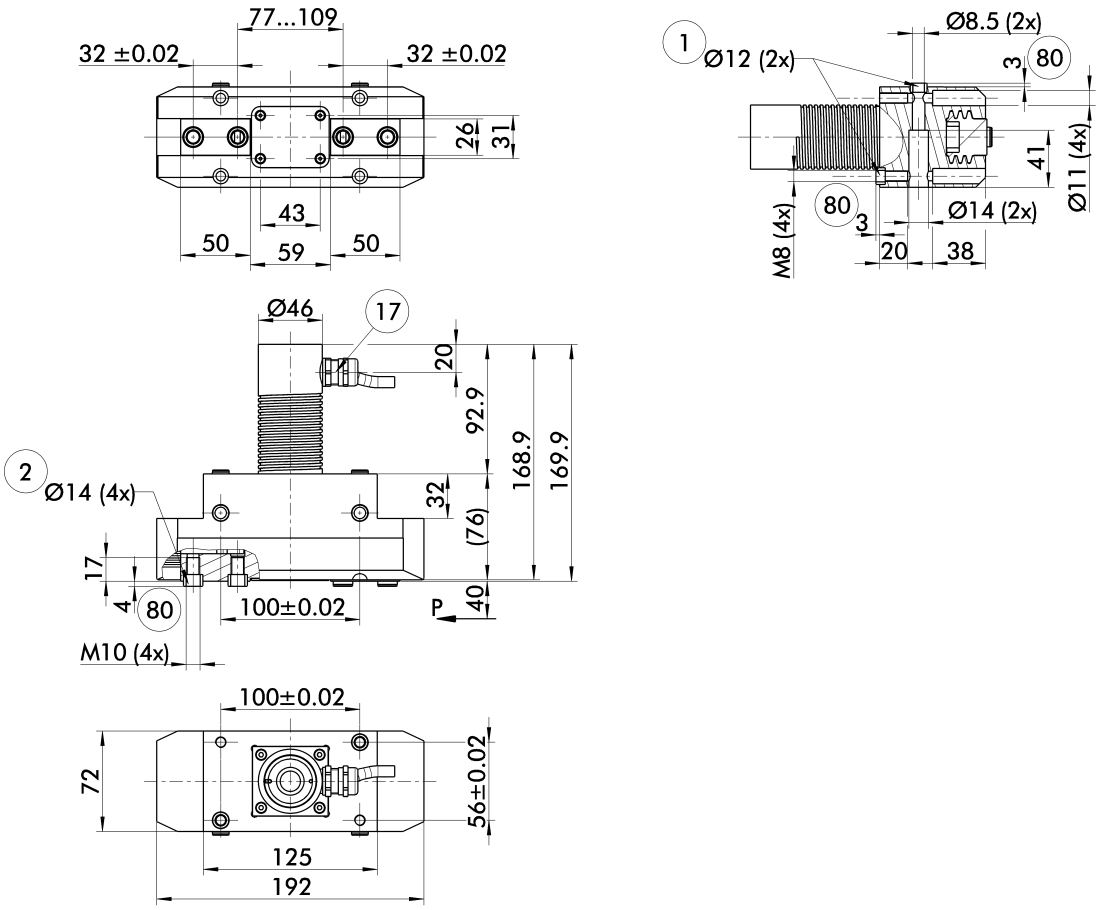


The drawing shows the gripper in the basic version with closed jaws, the dimensions do not include the options described below.

① Gripper connection
② Finger connection
⑰ Cable outlet
⑧⓪ Depth of the centering sleeve hole in the matching part

## Maximum permitted finger projection

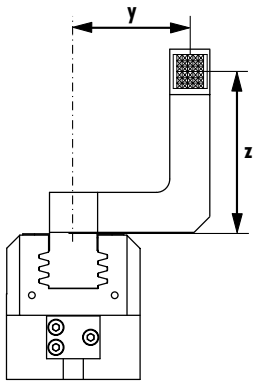


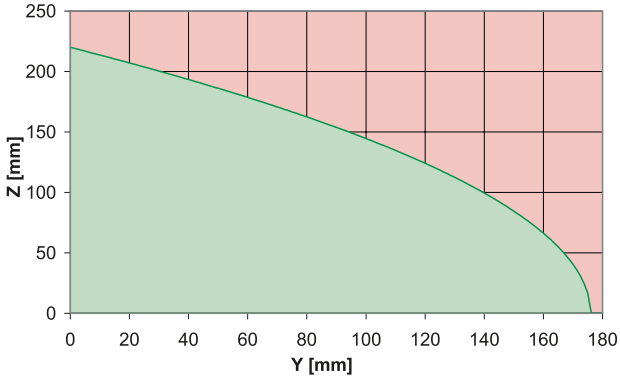


Permitted range
Inadmissible range

The curve applies to the basic version (stroke -1). For other versions, the curve will be parallel but offset in line with the max. permitted finger length.

## Quick-change Jaw System

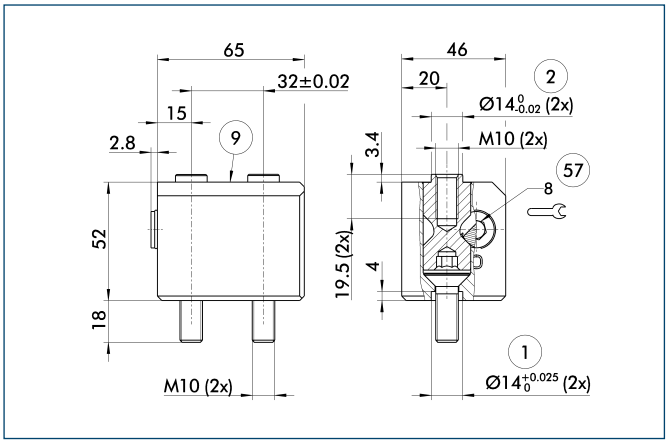


① Gripper connection
② Finger connection
⑨ For mounting screw connection diagram, see basic version
㊼ Locking

The BSWS quick-change jaw system enables top jaws to be changed on the gripper manually and rapidly. An adapter (BSWS-A) and a base (BSWS-B) are required for each gripper jaw.
For a reverse assembly without height set-up, one adapter (BSWS-A) and a kit (BSWS-U) per gripper jaw are required. Another effect of the BSWS-U is, that there are no disturbing fastening bores in the finger contour.

| Description | ID |
|---|---|
| Quick-change Jaw System adapter | |
| BSWS-A 160 | **0303030** |
| Quick-change Jaw System base | |
| BSWS-B 160 | **0303031** |

## Universal intermediate jaw

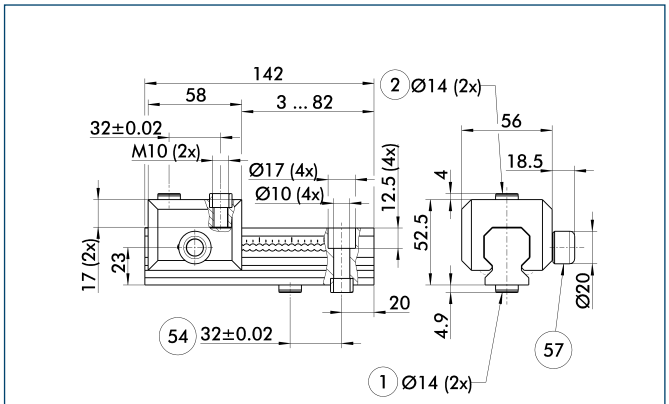


① Gripper connection
② Finger connection
㊹ Optional right or left connection
㊼ Locking

The universal intermediate jaw allows fast tool-free and reliable plugging and shifting of top jaws at the gripper.

| Description | ID | Grid dimension |
|---|---|---|
| Universal intermediate jaw | | |
| UZB 160 | **0300046** | 4 mm |
| UZB-S 160 | **5518274** | 4 mm |

ⓘ The slide UZB-S can be removed completely and has to be ordered separately. Moreover, it allows a fast jaw change.

You can find more detailed information and individual parts of the above-mentioned accessories in the “Accessories” catalog section.

## Force measuring jaws

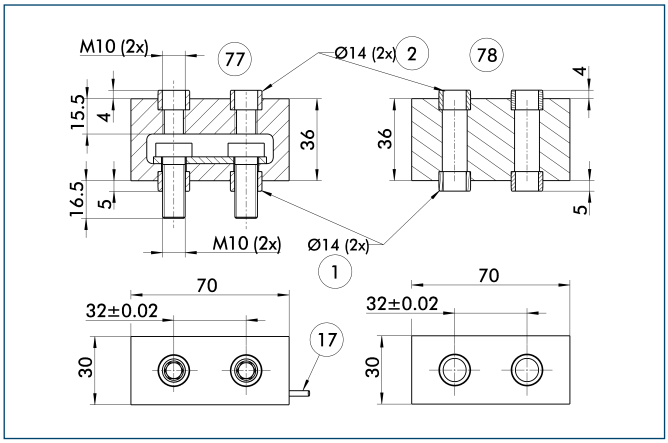


① Gripper connection
② Finger connection
⑰ Cable outlet
⑦⑦ Active intermediate jaws
⑦⑧ Passive intermediate jaws

Force measuring jaws measure gripping forces, but can also determine workpiece weights or dimensional deviations. There are active and passive intermediate jaws (FMS-ZBA or FMS-ZBP). At least one active force measuring jaw is required per gripper, the rest can be passive. For each active jaw, a FMS-A1 control unit and a FMS-A connection cable are required.

| Description | ID |
|---|---|
| Active intermediate jaws | |
| FMS-ZBA 160 | **0301840** |
| Passive intermediate jaws | |
| FMS-ZBP 160 | **0301841** |
| Electronic Processor | |
| FMS-A2 | **0301811** |
| Connection cables | |
| FMS-AK0200 | **0301820** |
| FMS-AK0500 | **0301821** |
| FMS-AK1000 | **0301822** |
| FMS-AK2000 | **0301823** |

## Finger blanks

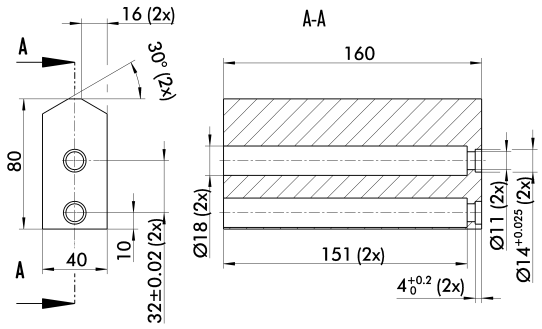


Finger blanks for customized subsequent machining

| Description | ID | Material | Scope of delivery |
|---|---|---|---|
| Finger blanks | | | |
| ABR-plus 160 | **0300014** | Aluminum | 1 |
| SBR-plus 160 | **0300024** | 16 MnCr 5 | 1 |

You can find more detailed information and individual parts of the above-mentioned accessories in the “Accessories” catalog section.

**Size**
70

**Weight**
1.4 kg

**Gripping force**
200 N

**Stroke per finger**
34 mm

**Workpiece weight**
1 kg

## Application example

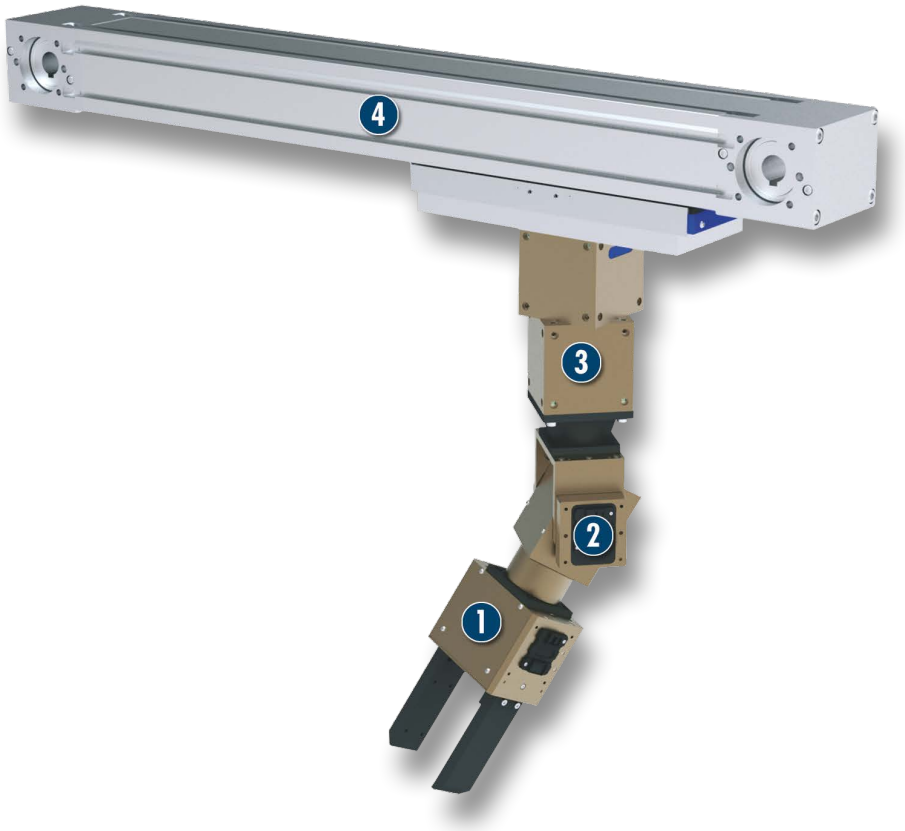


Gantry robot for flexible loading and unloading of sensitive workpieces

1. PG Servo-electric 2-Finger Parallel Gripper
2. PW Servo-electric Rotary Pan Tilt Actuator
3. Universal Rotary Unit PR
4. Linear axis with toothed-belt drive HSB Beta

## Universal Gripper

servo-electric 2-finger parallel gripper with highly precise gripping force control and long stroke

## Field of application

universal, ultra-flexible gripper for great part variety and sensitive components in clean working environments

## Your advantages and benefits

**Gripping force control in the range of 30 – 200 N**
for the delicate gripping of sensitive workpieces

**Large stroke of 70 mm**
for flexible workpiece handling

**Fully integrated control and power electronics**
for creating a decentralized control system

**Versatile actuation options**
for simple integration in existing servo-controlled concepts via Profibus-DP, CAN-Bus

**Standard connecting elements and uniform servo-controlled concept**
for extensive combinatorics with other PowerCube modules (see explanation of the PowerCube system)




## General note to the series

**Principle of function**
Spindle drive

**Housing material**
Aluminum alloy, hard-anodized

**Base jaw material**
Aluminum alloy, hard-anodized

**Actuation**
servo-electric, via brushless DC servo-motor

**Warranty**
24 months (details, general terms and conditions and operation manuals can be downloaded under www.schunk.com)

**Scope of delivery**
CD-ROM with SCHUNK software and assistant for commissioning, includes assembly- and operation manual, declaration of incorporation, enclosed pack with centering sleeves, functional module for control via Siemens S7-300/400. Finger blanks are not included.
For actuation of the gripper, an electric connection cap is necessary. This cap is not subject to the scope of delivery and has to be ordered separately.

## Sectional diagram

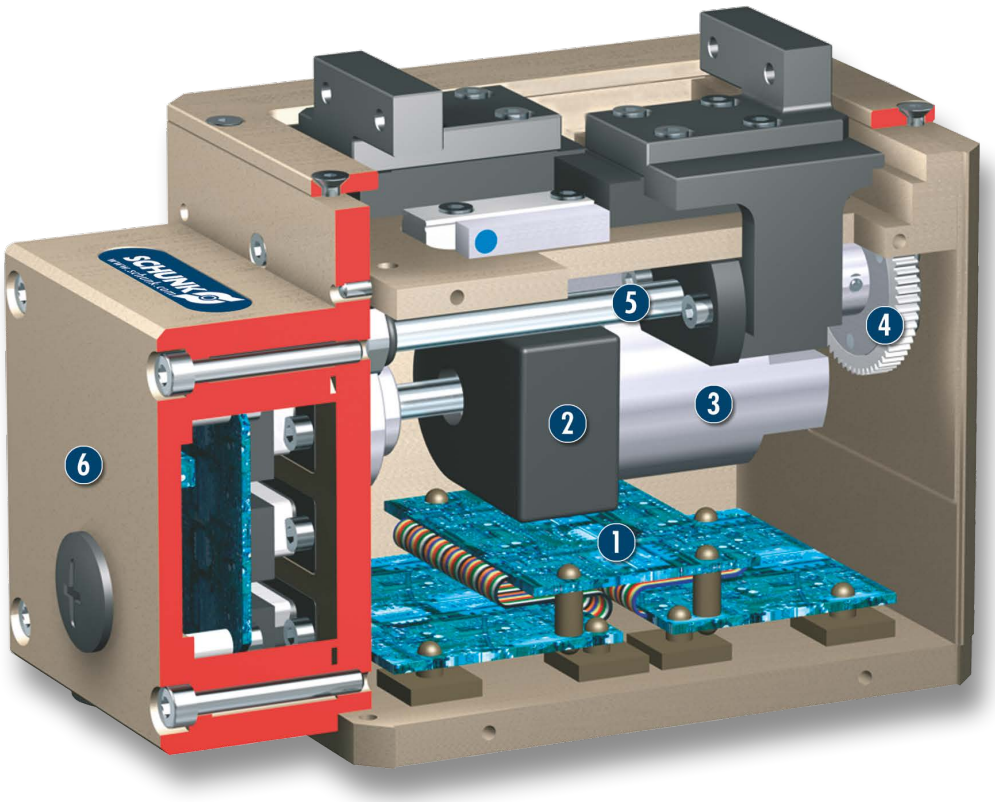


**1 Control electronics**
integrated control and power electronics for actuating the servo-motor

**2 Encoder**
for gripper positioning and position evaluation

**3 Drive**
brushless DC servo-motor

**4 Gear mechanism**
Force transmission from the servo-motor to the drive spindle

**5 Spindle**
transforms the rotational movement into the linear movement of the base jaw

**6 Connection cap**
Electrical connection for energy supply and communication

## Functional description

The brushless servo-motor drives the ball bearing spindle via the gear mechanism. The rotational movement is transformed into the linear movement of the base jaw by base jaws mounted on the spindles.

## Options and special information

The PG gripper is electrically actuated by the fully integrated control and power electronics. In this way, the module does not require any additional external control units.

A varied range of interfaces, such as Profibus-DP or CAN-Bus are available as methods of communication.This enables you to create industrial bus networks and ensures easy integration in control systems. You can make use of our hybrid cables for conveying the supply voltage and for communication.

For creating combined systems (e.g. Gripping/Rotary Units), further modules from our PowerCube serie are available for you.

## Accessories

Accessories from SCHUNK – the suitable supplement for maximum functionality, reliability and performance of all automation modules.

**Centering sleeves**



**Connection cap**

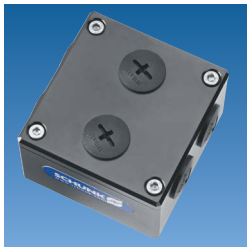

**Power-/and data cable**



**Standard connecting elements**

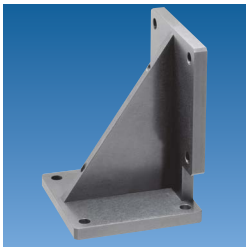

**Finger blanks**






ⓘ For the exact size of the required accessories, availability of this size and the designation and ID, please refer to the additional views at the end of the size in question. You will find more detailed information on our accessory range in the "Accessories" catalog section.

## General note to the series

**Gripping force**
is the arithmetic total of the gripping force applied to each finger at distance P (see illustration) measured from the upper edge of the gripper.

**Finger length**
The finger length is measured from the upper edge of the gripper housing in the direction of the main axis.

**Repeat accuracy**
is defined as the spread of the limit position after 100 consecutive strokes.

**Workpiece weight**
The recommended workpiece weight is calculated for a force-type connection with a coefficient of friction of 0.1 and a safety factor of 2 against slippage of the workpiece on acceleration due to gravity g. Considerably heavier workpiece weights are permitted with form-fit gripping.

**Currents**
The indicated nominal currents can be actuated permanently. With regard to all the currents which are ranging above the nominal current up to the maximum current, the notes of the individual product documentation has to be respected.

# PG 70





## Gripping force

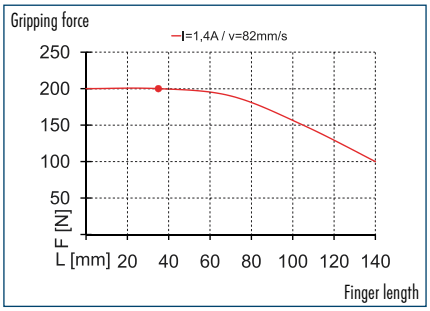


## Speed

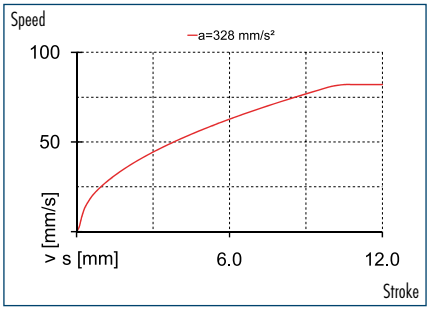


## Finger load

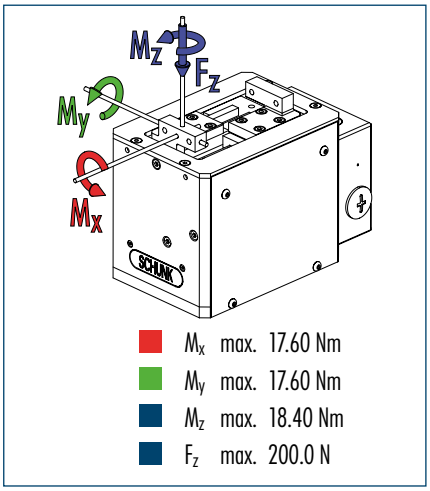


ⓘ The indicated moments and forces are static values, apply per base jaw and may occur simultaneously. $M_y$ may arise in addition to the moment generated by the gripping force itself. If the max. permitted finger weight is exceeded, it is imperative to throttle the air pressure so that the jaw movement occurs without any hitting or bouncing. Service life may be reduced.

## Technical data

| Description | | PG 70 |
|---|---|---|
| **ID** | | **0306095** |
| **General technical data gripper** | | |
| Stroke per finger | [mm] | 34 |
| Minimum/maximum gripping force | [N] | 30/200 |
| Weight | [kg] | 1.4 |
| Recommended workpiece weight | [kg] | 1 |
| Max. permitted finger length | [mm] | 140 |
| IP class | | 20 |
| Min./max. ambient temperature | [°C] | 5/55 |
| Repeat accuracy | [mm] | 0.05 |
| Maximum speed | [mm/s] | 82 |
| Maximum acceleration | [mm/s²] | 328 |
| **Electrical operating data gripper** | | |
| Power supply | [V DC] | 24 |
| Nominal current | [A] | 1.4 |
| Max. total current | [A] | 1.8 |
| **Controller operating data** | | |
| Description | | **PTA-V5.3** |
| Implementation | | integrated |
| Power supply | [V DC] | 24 |
| Field bus interface | | CAN / PROFIBUS / I/O |
| Parametrized interface | | CAN / PROFIBUS / RS232 |

## Main view

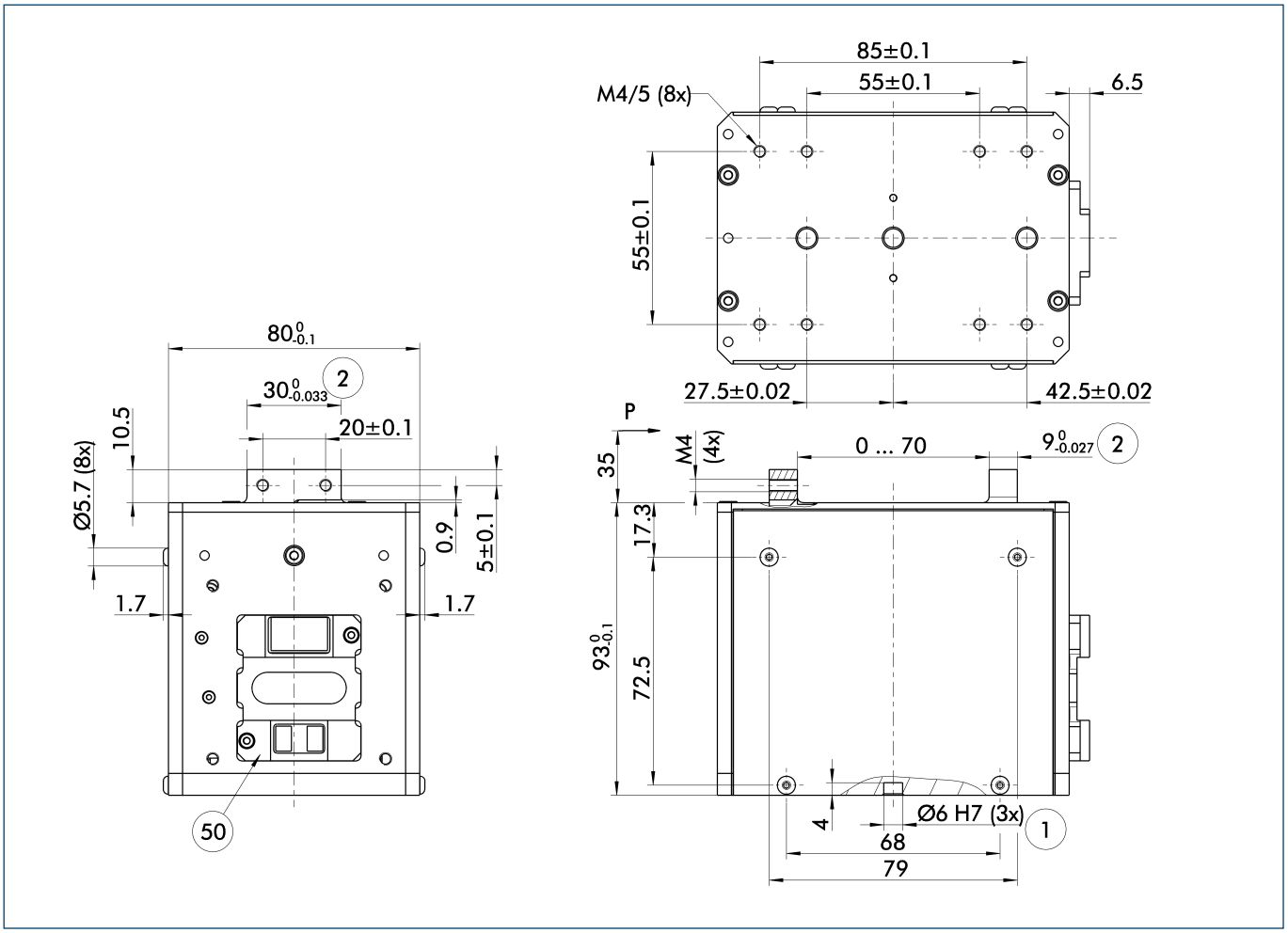


The drawing shows the gripper in the basic version with closed jaws, the dimensions do not include the options described below.

① Gripper connection
② Finger connection
50 Electronics connection

## Finger blanks

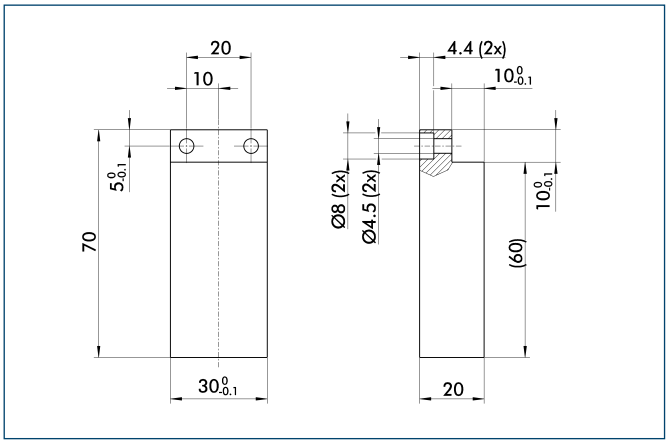


| Description | ID | Material | Scope of delivery |
|---|---|---|---|
| Finger blanks | | | |
| ABR-PG 70 | **0307850** | Aluminum | 1 |

You can find more detailed information and individual parts of the above-mentioned accessories in the “Accessories” catalog section.

## Connection cap MMI

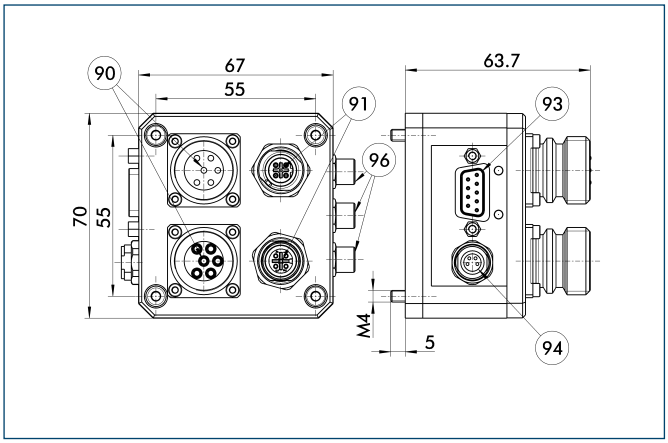


90 Connection power supply (logic / load)
91 Connection Feldbus
93 Parametrized interface RS232
94 Connection power supply service box (SSB)
96 Connection external end switch

| Description | ID |
|---|---|
| Connection cap modular mechatronic interface (MMI) | |
| MMI 070-V05-D-CN | **0307501** |
| MMI 070-V05-D-PB | **0307503** |
| MMI 070-V05-E-CN | **0307500** |
| MMI 070-V05-E-PB | **0307502** |
| Connection cables | |
| KA GGN1204-PB-00150-A | **0349750** |
| KA GGN1204-PB-00300-A | **0349751** |
| KA GGN1204-PB-00500-A | **0349752** |
| KA GGN1204-PB-01000-A | **0349753** |
| KA GGN1204-CN-00150-A | **0349770** |
| KA GGN1204-CN-00300-A | **0349771** |
| KA GGN1204-CN-00500-A | **0349772** |
| KA GGN1204-CN-01000-A | **0349773** |
| KA GLN2304-LK-00150-H | **0349870** |
| KA GLN2304-LK-00300-H | **0349871** |
| KA GLN2304-LK-00500-H | **0349872** |
| KA GLN2304-LK-01000-H | **0349873** |
| KA GGN2304-LK-00150-H | **0349874** |
| KA GGN2304-LK-00300-H | **0349875** |
| KA GGN2304-LK-00500-H | **0349876** |
| KA GGN2304-LK-01000-H | **0349877** |

## Connection cap DMI

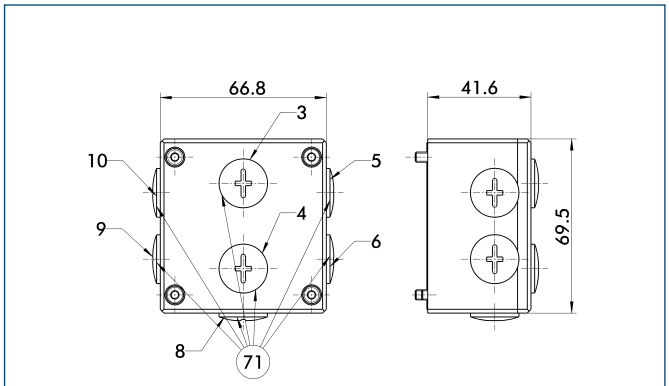


71 M 16 x 1.5 screw connection for cable guiding

| Description | ID |
|---|---|
| Connection cap sealed mechatronic interface (DMI) | |
| DMI 070-V05-B | **0307732** |
| Options | |
| DMI V5 BLUETOOTH | **0349050** |

You can find more detailed information and individual parts of the above-mentioned accessories in the “Accessories” catalog section.

## Connecting element – straight

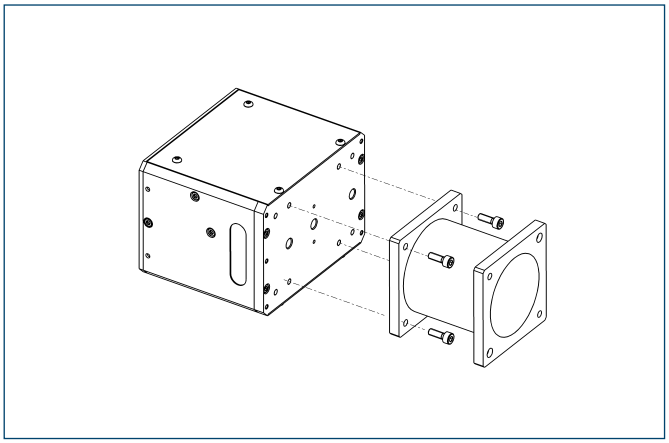

Straight standard element for connecting size 70 PowerCube modules

| Description | ID |
|---|---|
| Connecting element | |
| PAM 100 | **0307800** |
| PAM 101 | **0307801** |

ⓘ Special lengths on request

## Connecting element – conical

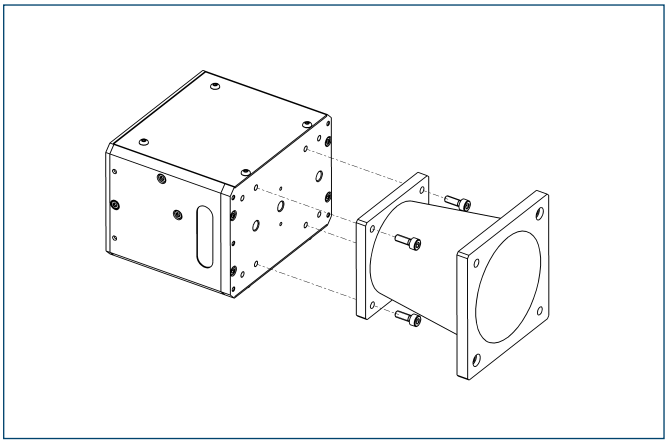

Conical standard element for connecting size 70 PowerCube modules

| Description | ID |
|---|---|
| Connecting element | |
| PAM 110 | **0307810** |
| PAM 111 | **0307811** |

ⓘ Special lengths on request

## Connecting element – angle

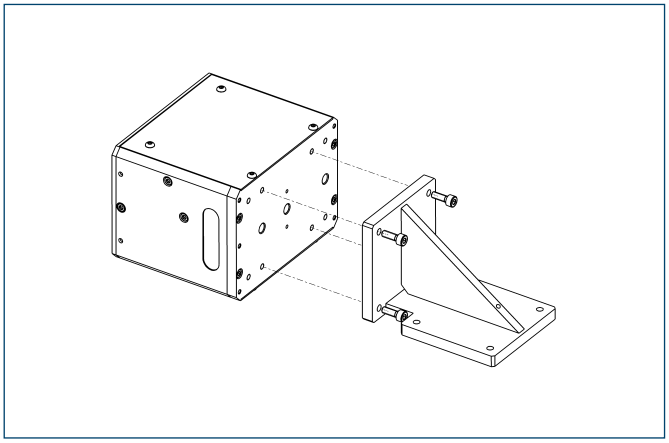

Right-angle standard element for connecting size 70 PowerCube modules

| Description | ID |
|---|---|
| Connecting element | |
| PAM 120 | **0307820** |

ⓘ Special lengths on request

You can find more detailed information and individual parts of the above-mentioned accessories in the “Accessories” catalog section.

# EVG

## Electrical • 2-Finger Parallel Gripper • Universal Gripper

**Sizes**
55-40 ... 55-100

**Weight**
0.79 kg ... 1.1 kg

**Gripping force**
24 N ... 57 N

**Stroke per finger**
20 mm ... 50 mm

**Workpiece weight**
0.12 kg ... 0.28 kg

## Application example

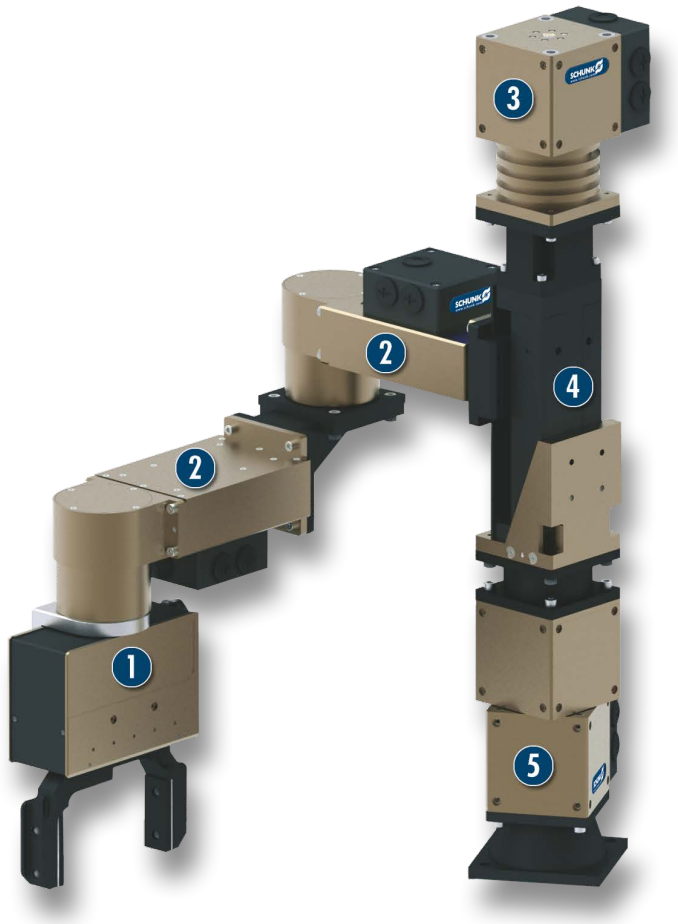


**Horizontal joint arm in scara design for pick-and-place applications**

1. Servo-electric 2-Finger Parallel Gripper EVG
2. Miniature Rotary Unit PRM
3. Spindle linear module PLS with integrated PSM servo drive
4. Spindle linear module PLS with integrated PSM servo drive
5. PR Servo-electric Rotary Actuator

## Universal Gripper

servo-electric 2-finger parallel gripper with highly precise gripping force control and long stroke

## Field of application

universal, ultra-flexible gripper for great part variety and sensitive components in clean working environments




## Your advantages and benefits

**Gripping force control in the range of 24 N – 57 N**
for the delicate gripping of sensitive workpieces

**Large stroke of 50 mm**
for flexible workpiece handling

**Pre-positioning capability**
to reduce cycle times through a short working stroke

**with external electronics**
for simple integration in existing servo-controlled concepts via Profibus-DP, CAN-Bus

**Profiled rail guide**
for the precise handling of all kinds of workpieces

**Mounting from two sides in three screw directions possible**
for universal and flexible gripper assembly

## General note to the series

**Principle of function**
Linear guidance with belt drive

**Housing material**
Aluminum alloy, hard-anodized

**Base jaw material**
Aluminum alloy, hard-anodized

**Actuation**
servo-electric, via brushless DC servo-motor and bevel gear

**Warranty**
24 months (details, general terms and conditions and operation manuals can be downloaded under www.schunk.com)

**Scope of delivery**
CD-ROM with SCHUNK software and assistant for commissioning, includes assembly- and operation manual, declaration of incorporation, enclosed pack with centering sleeves, functional module for control via Siemens S7-300/400. Finger blanks are not included.
For actuating the gripper, an external control unit is required.

## Sectional diagram

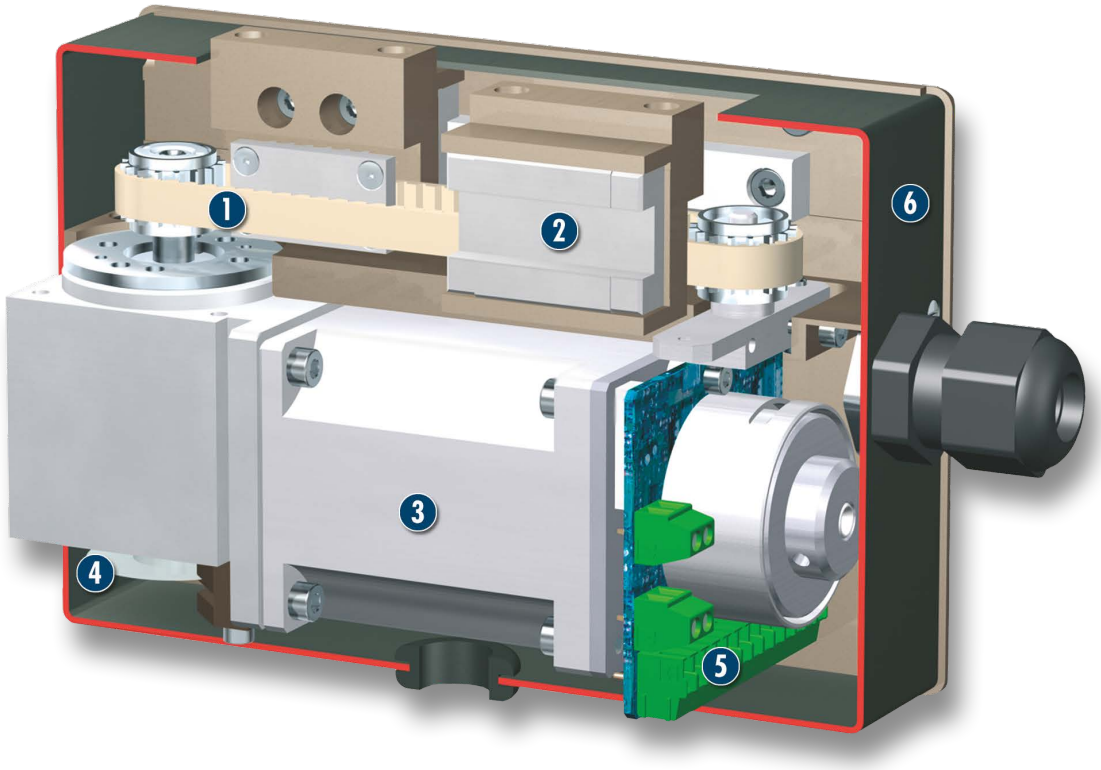


**1 Kinematics**
scope-free, robust toothed belt drive with steel reinforcement

**2 Profiled rail guide**
for precise gripping with minimum play, smooth running gripping and low frictional loss

**3 Drive**
brushless DC servo-motor with hall-effect sensors and bevel gear, incl. holding break

**4 Encoder**
for gripper positioning and position evaluation

**5 Connection circuit boards**
Connection to the controller MCS-06

**6 Housing**
weight-optimized through application of hard-anodized, high-strength aluminum alloy

## Functional description

The brushless servo-motor drives the ball screw by means of the gear mechanism. The rotational movement is transformed into the linear movement of the base jaw by base jaws mounted on the spindles.

## Options and special information

Electrical actuation of the EVG gripper is carried out via the external control unit MCS-6. A varied range of interfaces, such as Profibus-DP or CAN-Bus are available as methods of communication.
This enables you to create industrial bus networks, and ensures easy integration in control systems. If integration of combined systems (e.g. gripper/rotary units) takes place, several further modules of our range of products are available for you.

## Accessories

Accessories from SCHUNK – the suitable supplement for maximum functionality, reliability and performance of all automation modules.

**Centering sleeves**



**Control unit**

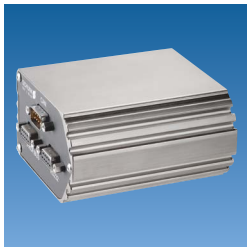



ⓘ For the exact size of the required accessories, availability of this size and the designation and ID, please refer to the additional views at the end of the size in question. You will find more detailed information on our accessory range in the “Accessories” catalog section.

## General note to the series

**Gripping force**
is the arithmetic total of the gripping force applied to each finger at distance P (see illustration) measured from the upper edge of the gripper.

**Finger length**
The finger length is measured from the upper edge of the gripper housing in the direction of the main axis.

**Repeat accuracy**
is defined as the spread of the limit position after 100 consecutive strokes.

**Workpiece weight**
The recommended workpiece weight is calculated for a force-type connection with a coefficient of friction of 0.1 and a safety factor of 2 against slippage of the workpiece on acceleration due to gravity g. Considerably heavier workpiece weights are permitted with form-fit gripping.

**Currents**
The indicated nominal currents can be actuated permanently. With regard to all the currents which are ranging above the nominal current up to the maximum current, the notes of the individual product documentation has to be respected.

# EVG 55-40

**Electrical • 2-Finger Parallel Gripper • Universal Gripper**



## Gripping force

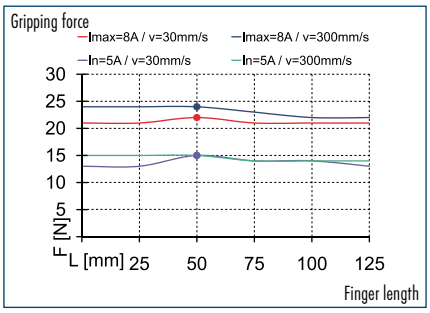


## Speed

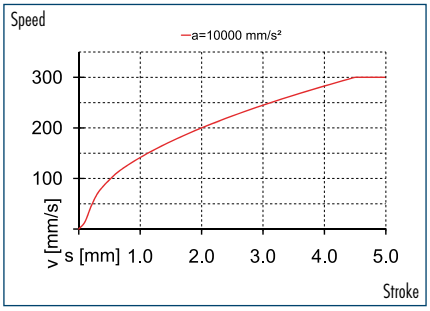


## Finger load

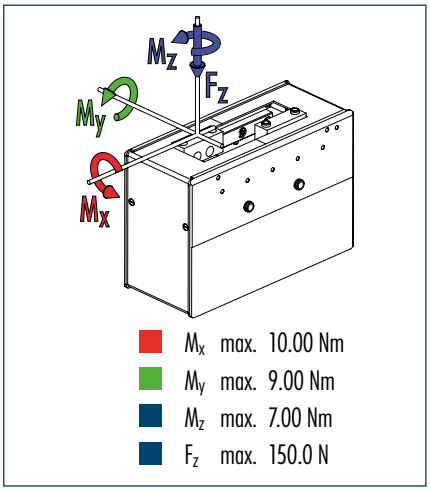


ⓘ The indicated moments and forces are static values, apply per base jaw and may occur simultaneously. $M_y$ may arise in addition to the moment generated by the gripping force itself. If the max. permitted finger weight is exceeded, it is imperative to throttle the air pressure so that the jaw movement occurs without any hitting or bouncing. Service life may be reduced.

## Technical data

| Description | | EVG 55-40 |
|---|---|---|
| **ID** | | **0306020** |
| **General technical data gripper** | | |
| Stroke per finger | [mm] | 20 |
| Minimum/maximum gripping force | [N] | 5/24 |
| Weight | [kg] | 0.79 |
| Recommended workpiece weight | [kg] | 0.12 |
| Max. permitted finger length | [mm] | 125 |
| Max. permitted weight per finger | [kg] | 0.1 |
| IP class | | 20 |
| Min./max. ambient temperature | [°C] | 5/55 |
| Repeat accuracy | [mm] | 0.05 |
| Maximum speed | [mm/s] | 300 |
| Maximum acceleration | [mm/s²] | 10000 |
| **Electrical operating data gripper** | | |
| Power supply | [V DC] | 24 |
| Nominal current | [A] | 5 |
| Max. total current | [A] | 8 |
| Resolution | [Inc/U] | 2000 |
| **Controller operating data** | | |
| Description | | **MCS-06 (EVG55-040)** |
| ID | | **0306030** |
| Implementation | | external |
| Power supply | [V DC] | 24 |
| Field bus interface | | CAN / PROFIBUS / I/O |
| Parametrized interface | | CAN / PROFIBUS / RS232 |

## Main view

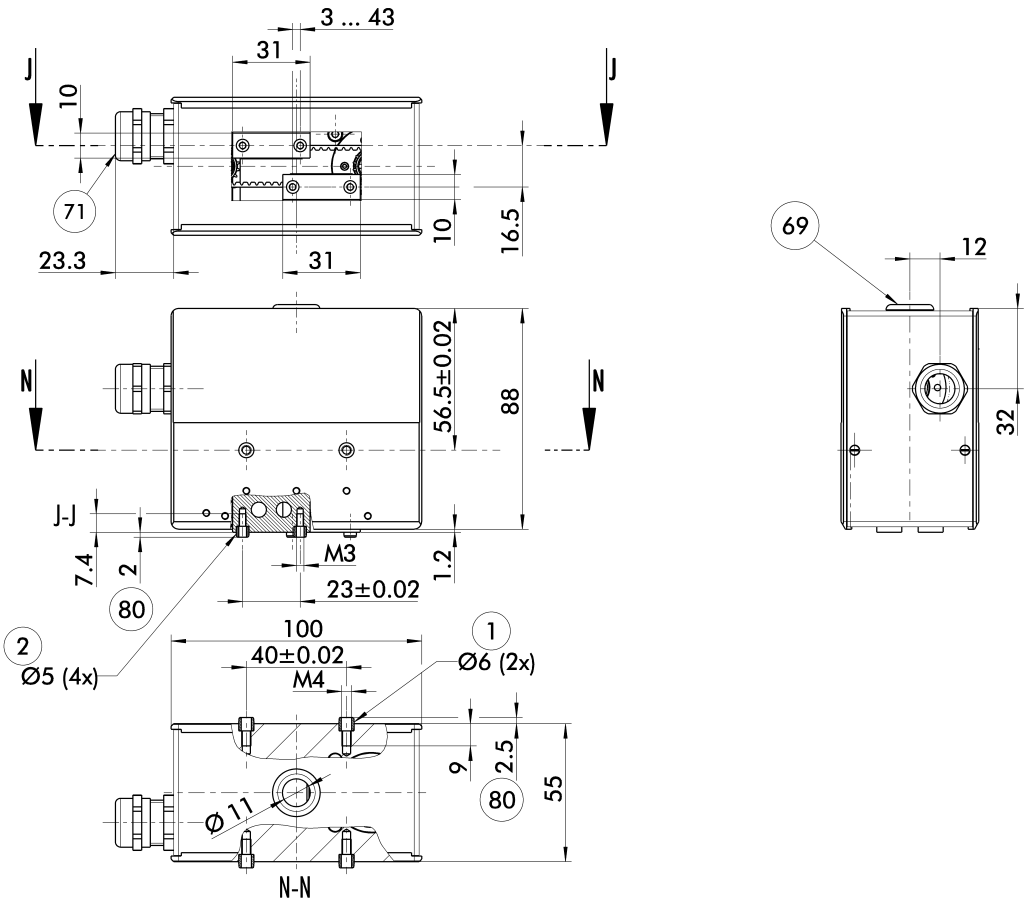


The drawing shows the gripper in the basic version with opened jaws without considering the dimensions of the described options below.

① Gripper connection
② Finger connection
⑥⑨ Connection for electric feed-through
⑦① M 16 x 1.5 screw connection for cable guiding
⑧⓪ Depth of the centering sleeve hole in the matching part

# EVG 55-100

**Electrical • 2-Finger Parallel Gripper • Universal Gripper**



## Gripping force

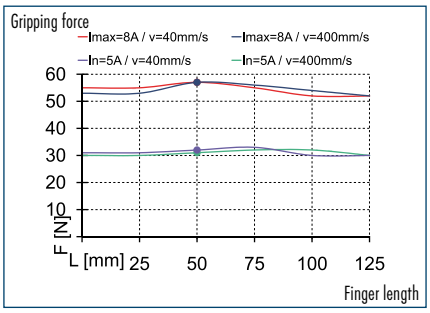


## Speed

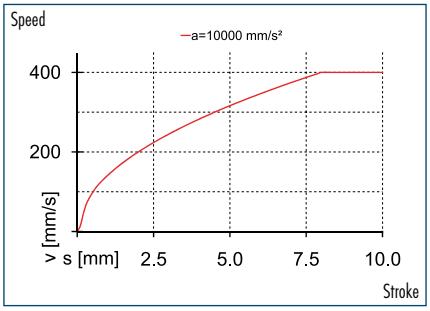


## Finger load

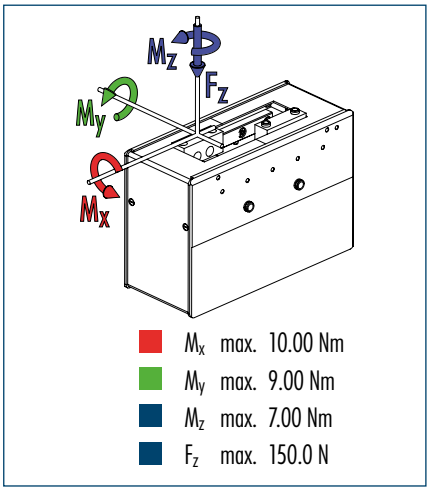


ⓘ The indicated moments and forces are static values, apply per base jaw and may occur simultaneously. $M_y$ may arise in addition to the moment generated by the gripping force itself. If the max. permitted finger weight is exceeded, it is imperative to throttle the air pressure so that the jaw movement occurs without any hitting or bouncing. Service life may be reduced.

## Technical data

| Description | | EVG 55-100 |
|---|---|---|
| **ID** | | **0306025** |
| **General technical data gripper** | | |
| Stroke per finger | [mm] | 50 |
| Minimum/maximum gripping force | [N] | 3/57 |
| Weight | [kg] | 1.1 |
| Recommended workpiece weight | [kg] | 0.28 |
| Max. permitted finger length | [mm] | 125 |
| Max. permitted weight per finger | [kg] | 0.1 |
| IP class | | 20 |
| Min./max. ambient temperature | [°C] | 5/55 |
| Repeat accuracy | [mm] | 0.05 |
| Maximum speed | [mm/s] | 400 |
| Maximum acceleration | [mm/s²] | 10000 |
| **Electrical operating data gripper** | | |
| Power supply | [V DC] | 24 |
| Nominal current | [A] | 5 |
| Max. total current | [A] | 8 |
| Resolution | [Inc/U] | 2000 |
| **Controller operating data** | | |
| Description | | **MCS-06 (EVG55-100)** |
| ID | | **0306031** |
| Implementation | | external |
| Power supply | [V DC] | 24 |
| Field bus interface | | CAN / PROFIBUS / I/O |
| Parametrized interface | | CAN / PROFIBUS / RS232 |

## Main view

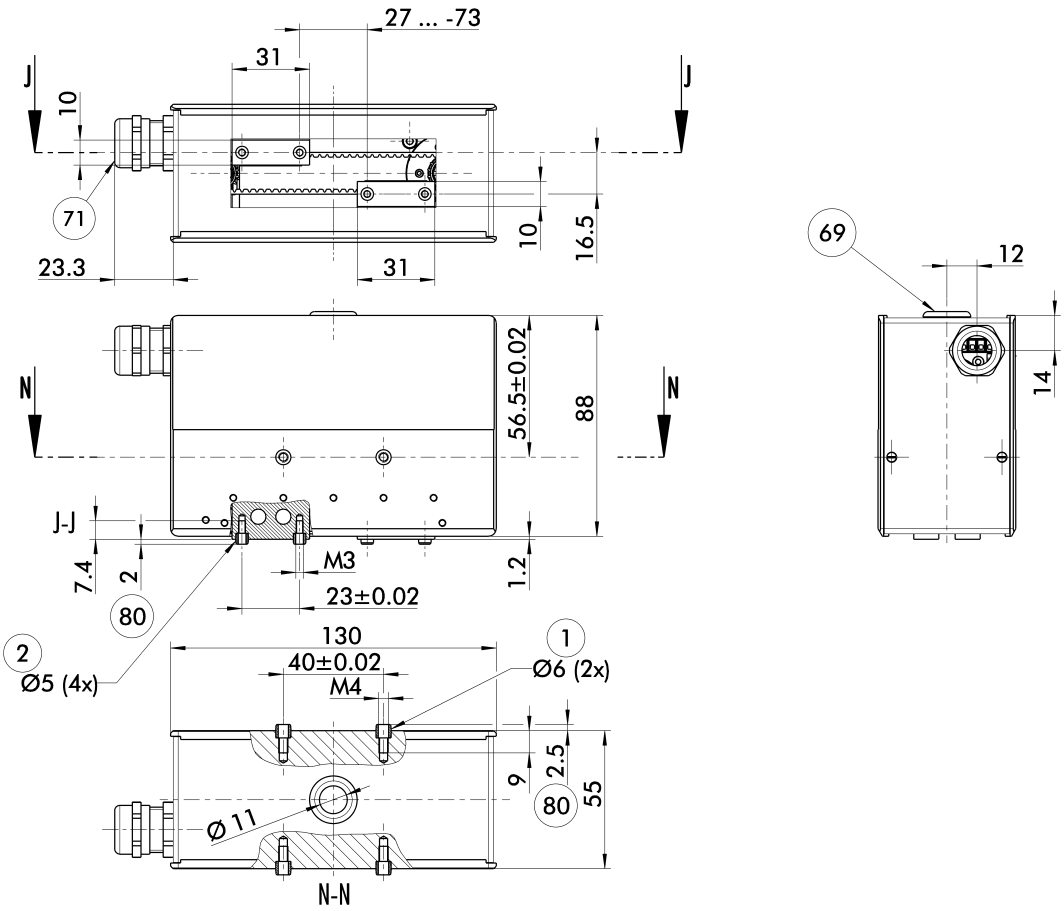


The drawing shows the gripper in the basic version with opened jaws without considering the dimensions of the described options below.

① Gripper connection
② Finger connection
⑥⑨ Connection for electric feed-through
⑦① M 16 x 1.5 screw connection for cable guiding
⑧⓪ Depth of the centering sleeve hole in the matching part

# PEH

**Electrical • 2-Finger Parallel Gripper • Long-stroke Gripper**

**Sizes**
30 ... 50

**Weight**
5.4 kg ... 14.8 kg

**Gripping force**
750 N ... 1800 N

**Stroke per finger**
60 mm ... 100 mm

**Workpiece weight**
3.75 kg ... 9 kg

## Application example

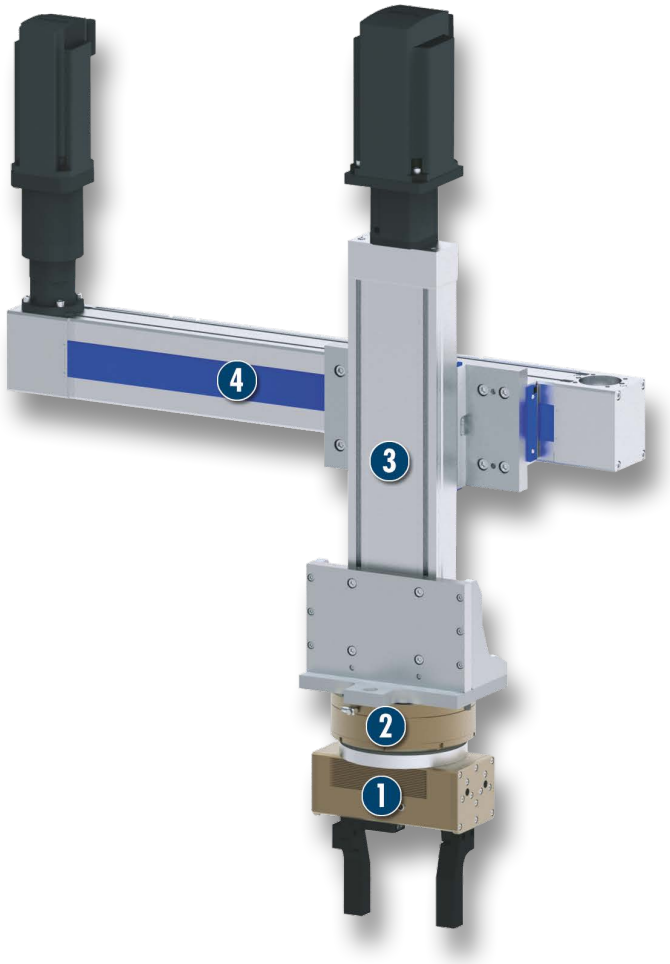


**Fully electrically driven gantry axis for loading and depalettizing of various components with a large variance**

1. PEH servo-electric 2-Finger Parallel Gripper
2. Rotary module with STM torque motor
3. Linear axis with spindle drive HSB Delta
4. Linear axis with toothed-belt drive HSB Beta

## Long-stroke Gripper

servo-electric 2-finger parallel gripper with long jaw stroke for large parts and/or a broad range of parts

## Field of application

universal, ultra-flexible gripper for great part variety in clean to slightly dirty working environments

## Your advantages and benefits

**Gripping force control in the range of 100 N – 1800 N**
for the powerful gripping of various workpieces

**Large stroke of 200 mm**
for flexible workpiece handling

**Fully integrated control and power electronics**
for creating a decentralized control system

**Versatile actuation options**
for simple integration in existing servo-controlled concepts via Profibus-DP, CAN-Bus

**Robust guidance**
for the precise handling of all kinds of workpieces

**High maximum moments possible**
suitable for using long gripper fingers

**Mounting from two sides in three screw directions possible**
for universal and flexible gripper assembly




## General note to the series

**Principle of function**
Spindle drive synchronized by rack and pinion principle

**Housing material**
Aluminum alloy, hard-anodized

**Base jaw material**
Steel

**Actuation**
servo-electric, via brushless DC servo-motor

**Warranty**
24 months (details, general terms and conditions and operation manuals can be downloaded under www.schunk.com)

**Scope of delivery**
CD-ROM with SCHUNK software and assistant for commissioning, includes assembly- and operation manual, declaration of incorporation, enclosed pack with centering sleeves, functional module for control via Siemens S7-300/400. Finger blanks are not included.
For actuation of the gripper, an electric connection cap is necessary. This cap is not subject to the scope of delivery and has to be ordered separately.

## Sectional diagram

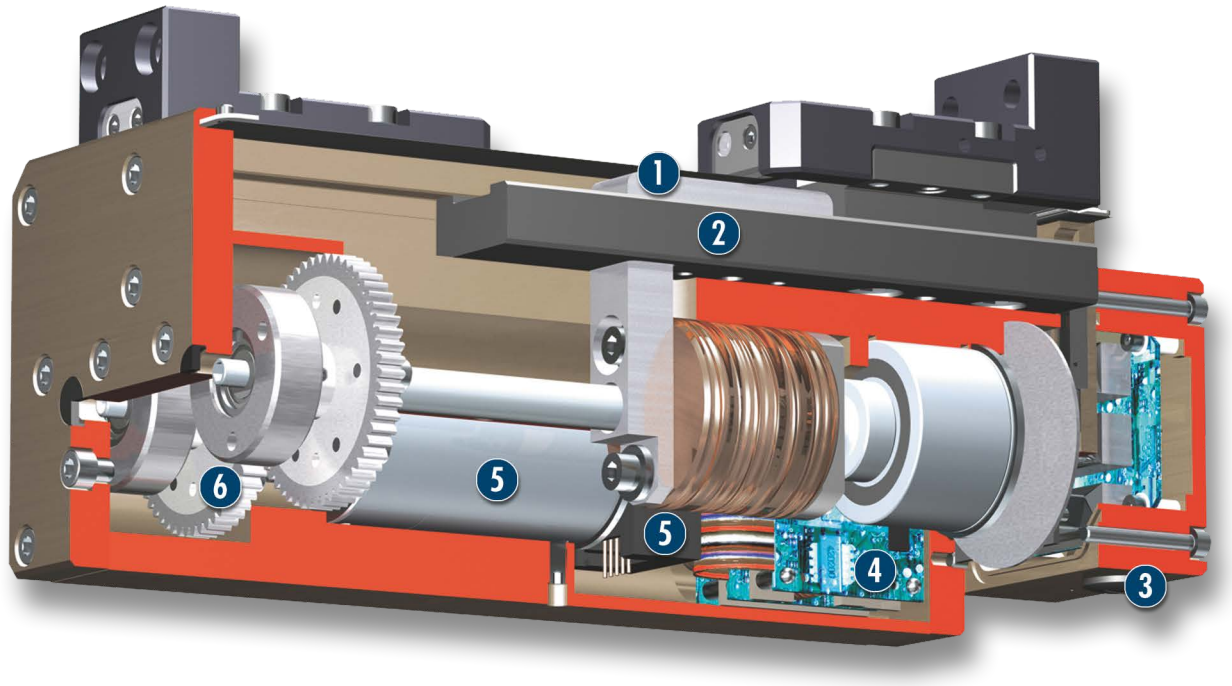


**1 Kinematics**
Rack and pinion principle for centric gripping

**2 Guidance**
for precise gripping with minimal play at a high load capacity

**3 Connection cap**
Electrical connection for energy supply and communication

**4 Control electronics**
integrated control and power electronics for actuating the servo-motor

**5 Drive**
brushless DC servo-motor with hall-effect sensors and encoder

**6 Gear mechanism**
Force transmission from the servo-motor to the drive spindle

## Functional description

The brushless servo-motor drives the ball bearing spindle via the gear mechanism.
A base jaw is moved by means of a carrier on the spindle.
The jaw stroke is synchronized by means of rack and pinion kinematics.

## Options and special information

The PEH gripper is electrically actuated by the fully integrated control and power electronics. In this way, the module does not require any additional external control units.
A varied range of interfaces, such as Profibus-DP or CAN-Bus are available as methods of communication.This enables you to create industrial bus networks and ensures easy integration in control systems. You can make use of our hybrid cables for conveying the supply voltage and for communication.
For creating combined systems (e.g. Gripping/Rotary Units), further modules from our PowerCube series are available for you.

## Accessories

Accessories from SCHUNK – the suitable supplement for maximum functionality, reliability and performance of all automation modules.

**Centering sleeves**



**Connection cap**

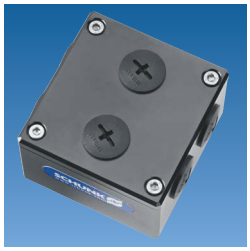

**Power-/and data cable**






ⓘ For the exact size of the required accessories, availability of this size and the designation and ID, please refer to the additional views at the end of the size in question. You will find more detailed information on our accessory range in the “Accessories” catalog section.

## General note to the series

**Gripping force**
is the arithmetic total of the gripping force applied to each finger at distance P (see illustration) measured from the upper edge of the gripper.

**Finger length**
The finger length is measured from the upper edge of the gripper housing in the direction of the main axis.

**Repeat accuracy**
is defined as the spread of the limit position after 100 consecutive strokes.

**Workpiece weight**
The recommended workpiece weight is calculated for a force-type connection with a coefficient of friction of 0.1 and a safety factor of 2 against slippage of the workpiece on acceleration due to gravity g. Considerably heavier workpiece weights are permitted with form-fit gripping.

**Currents**
The indicated nominal currents can be actuated permanently. With regard to all the currents which are ranging above the nominal current up to the maximum current, the notes of the individual product documentation has to be respected.

# PEH 30

## Electrical • 2-Finger Parallel Gripper • Long-stroke Gripper



### Gripping force

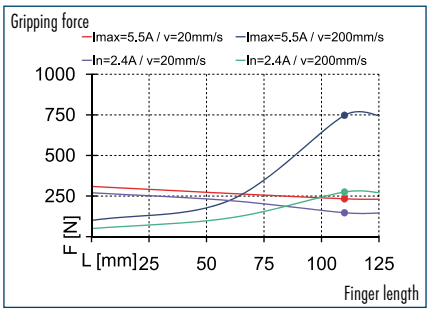


### Speed

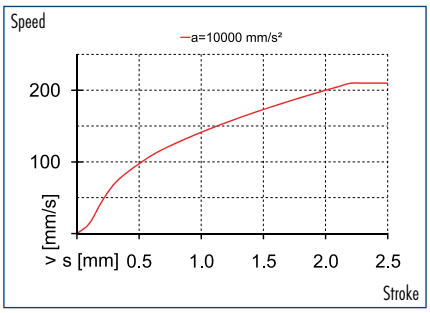


### Finger load

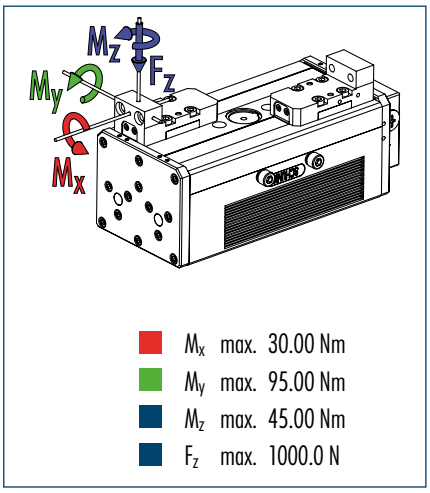


- $M_x$ max. 30.00 Nm
- $M_y$ max. 95.00 Nm
- $M_z$ max. 45.00 Nm
- $F_z$ max. 1000.0 N

ⓘ The indicated moments and forces are static values, apply per base jaw and may occur simultaneously. $M_y$ may arise in addition to the moment generated by the gripping force itself. If the max. permitted finger weight is exceeded, it is imperative to throttle the air pressure so that the jaw movement occurs without any hitting or bouncing. Service life may be reduced.

## Technical data

| Description | | PEH 30 |
|---|---|---|
| **ID** | | **0306060** |
| **General technical data gripper** | | |
| Stroke per finger | [mm] | 60 |
| Minimum/maximum gripping force | [N] | 150/750 |
| Weight | [kg] | 5.4 |
| Recommended workpiece weight | [kg] | 3.75 |
| Max. permitted finger length | [mm] | 125 |
| Max. permitted weight per finger | [kg] | 2 |
| IP class | | 41 |
| Min./max. ambient temperature | [°C] | 5/45 |
| Repeat accuracy | [mm] | 0.05 |
| Maximum speed | [mm/s] | 210 |
| Maximum acceleration | [mm/s²] | 10000 |
| **Electrical operating data gripper** | | |
| Power supply | [V DC] | 24 |
| Nominal current | [A] | 2.4 |
| Max. total current | [A] | 5.5 |
| Resolution | [Inc/U] | 1 |
| **Controller operating data** | | |
| Description | | **PTA-V5.3** |
| Implementation | | integrated |
| Power supply | [V DC] | 24 |
| Field bus interface | | CAN / PROFIBUS / I/O |
| Parametrized interface | | CAN / PROFIBUS / RS232 |

## Main view

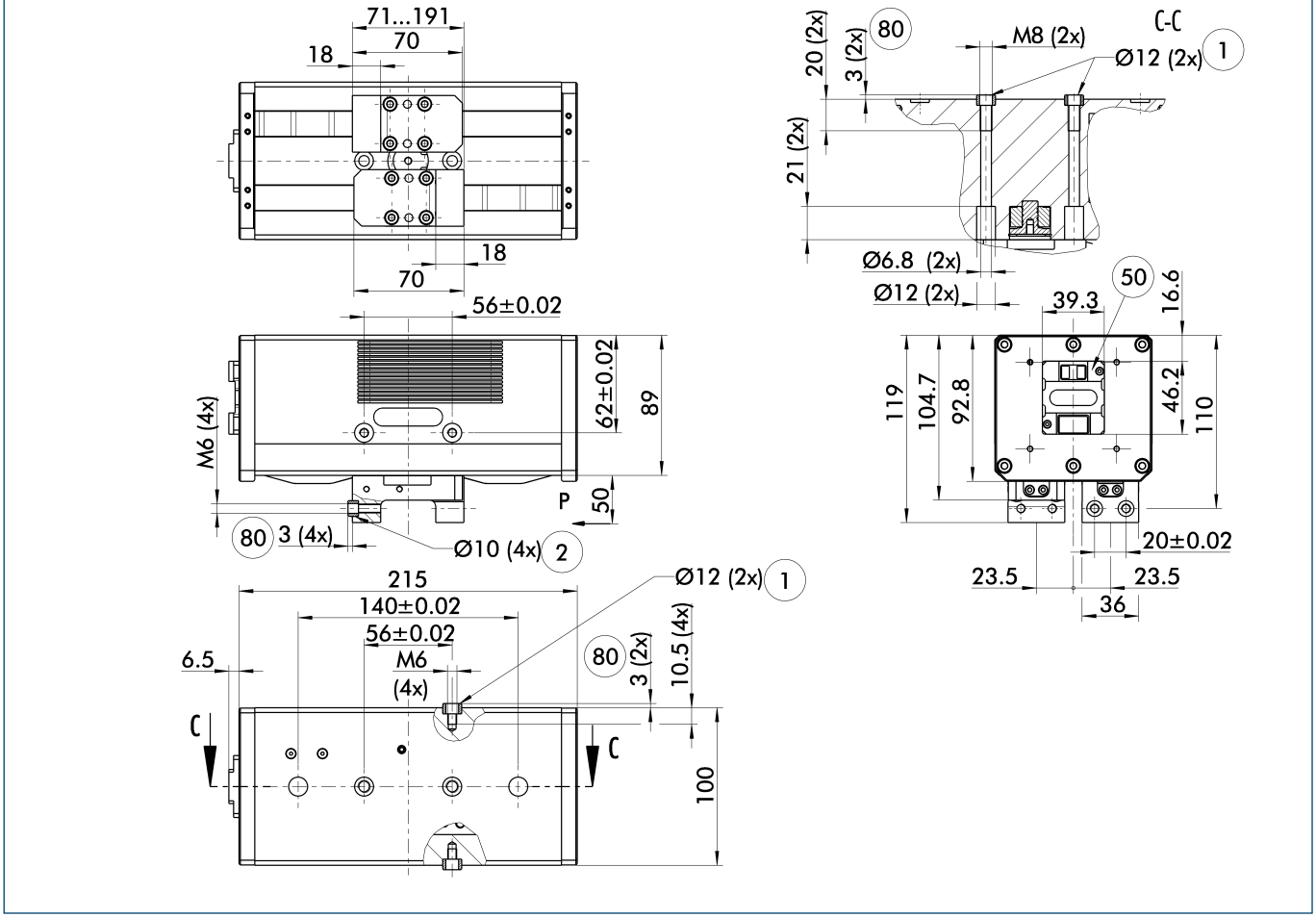


The drawing shows the gripper in the basic version with closed jaws, the dimensions do not include the options described below.

① Gripper connection
② Finger connection
50 Electronics connection
80 Depth of the centering sleeve hole in the matching part

## Connection cap MMI

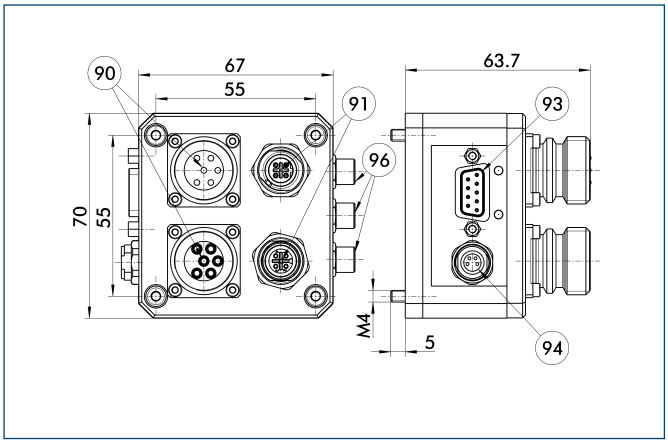


(90) Connection power supply (logic / load)
(91) Connection Feldbus
(93) Parametrized interface RS232
(94) Connection power supply service box (SSB)
(96) Connection external end switch

| Description | ID |
|---|---|
| Connection cap modular mechatronic interface (MMI) | |
| MMI 070-V05-D-CN | **0307501** |
| MMI 070-V05-D-PB | **0307503** |
| MMI 070-V05-E-CN | **0307500** |
| MMI 070-V05-E-PB | **0307502** |
| Connection cables | |
| KA GGN1204-PB-00150-A | **0349750** |
| KA GGN1204-PB-00300-A | **0349751** |
| KA GGN1204-PB-00500-A | **0349752** |
| KA GGN1204-PB-01000-A | **0349753** |
| KA GGN1204-CN-00150-A | **0349770** |
| KA GGN1204-CN-00300-A | **0349771** |
| KA GGN1204-CN-00500-A | **0349772** |
| KA GGN1204-CN-01000-A | **0349773** |
| KA GLN2304-LK-00150-H | **0349870** |
| KA GLN2304-LK-00300-H | **0349871** |
| KA GLN2304-LK-00500-H | **0349872** |
| KA GLN2304-LK-01000-H | **0349873** |
| KA GGN2304-LK-00150-H | **0349874** |
| KA GGN2304-LK-00300-H | **0349875** |
| KA GGN2304-LK-00500-H | **0349876** |
| KA GGN2304-LK-01000-H | **0349877** |

## Connection cap DMI

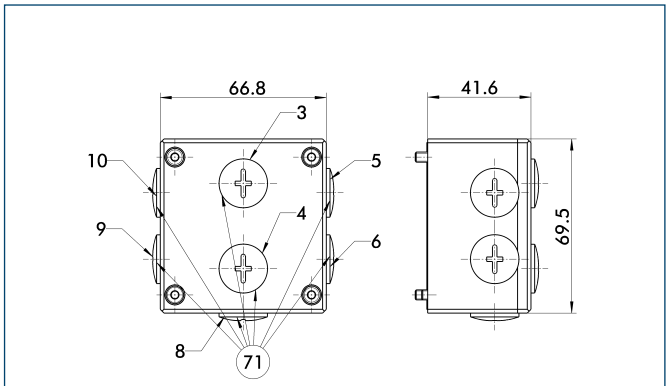


(71) M 16 x 1.5 screw connection for cable guiding

| Description | ID |
|---|---|
| Connection cap sealed mechatronic interface (DMI) | |
| DMI 070-V05-B | **0307732** |
| Options | |
| DMI V5 BLUETOOTH | **0349050** |

You can find more detailed information and individual parts of the above-mentioned accessories in the “Accessories” catalog section.

# PEH 40

**Electrical • 2-Finger Parallel Gripper • Long-stroke Gripper**



## Gripping force, O.D. gripping

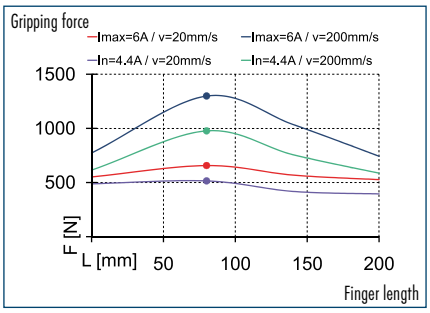


## Speed

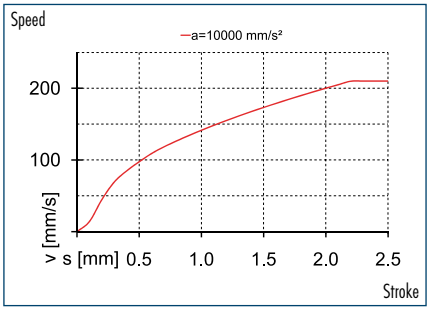


## Finger load

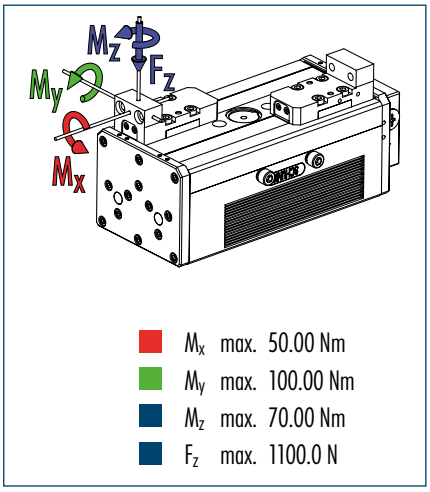


- $M_x$ max. 50.00 Nm
- $M_y$ max. 100.00 Nm
- $M_z$ max. 70.00 Nm
- $F_z$ max. 1100.0 N

ⓘ The indicated moments and forces are static values, apply per base jaw and may occur simultaneously. $M_y$ may arise in addition to the moment generated by the gripping force itself. If the max. permitted finger weight is exceeded, it is imperative to throttle the air pressure so that the jaw movement occurs without any hitting or bouncing. Service life may be reduced.

## Technical data

| Description | | PEH 40 |
|---|---|---|
| **ID** | | **0306062** |
| **General technical data gripper** | | |
| Stroke per finger | [mm] | 60 |
| Minimum/maximum gripping force | [N] | 150/1300 |
| Weight | [kg] | 7.8 |
| Recommended workpiece weight | [kg] | 6.5 |
| Max. permitted finger length | [mm] | 200 |
| Max. permitted weight per finger | [kg] | 3 |
| IP class | | 41 |
| Min./max. ambient temperature | [°C] | 5/55 |
| Repeat accuracy | [mm] | 0.05 |
| Maximum speed | [mm/s] | 210 |
| Maximum acceleration | [mm/s²] | 10000 |
| **Electrical operating data gripper** | | |
| Power supply | [V DC] | 24 |
| Nominal current | [A] | 4.4 |
| Max. total current | [A] | 6 |
| Resolution | [Inc/U] | 1 |
| **Controller operating data** | | |
| Description | | **PTA-V5.3** |
| Implementation | | integrated |
| Power supply | [V DC] | 24 |
| Field bus interface | | CAN / PROFIBUS / I/O |
| Parametrized interface | | CAN / PROFIBUS / RS232 |

## Main view

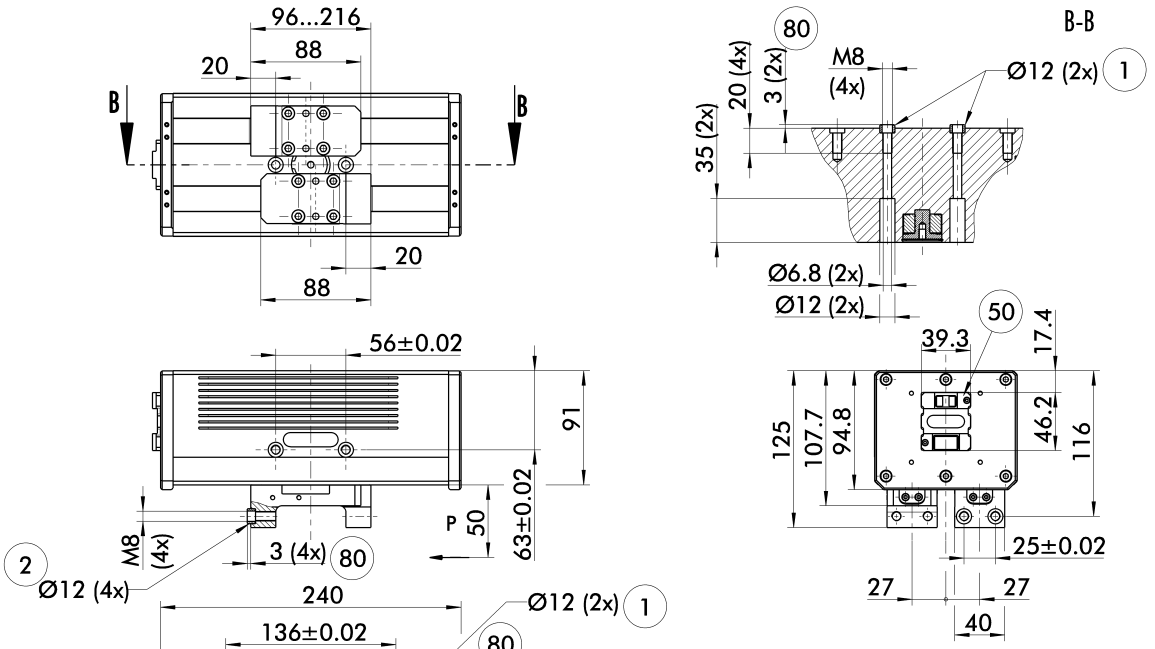


The drawing shows the gripper in the basic version with closed jaws, the dimensions do not include the options described below.

① Gripper connection
② Finger connection
50 Electronics connection
80 Depth of the centering sleeve hole in the matching part

## Connection cap MMI

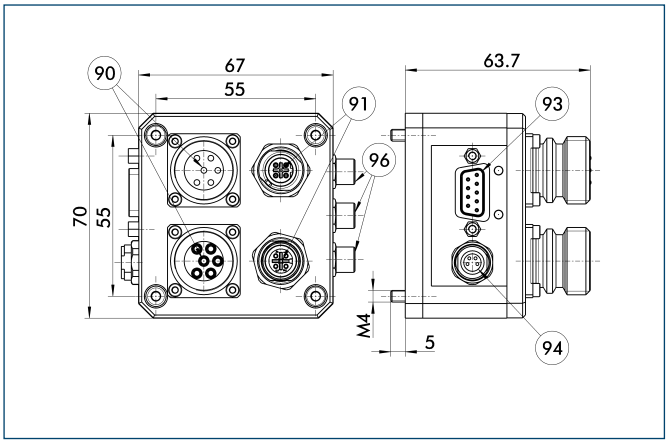


90 Connection power supply (logic / load)
91 Connection Feldbus
93 Parametrized interface RS232
94 Connection power supply service box (SSB)
96 Connection external end switch

| Description | ID |
|---|---|
| Connection cap modular mechatronic interface (MMI) | |
| MMI 070-V05-D-CN | **0307501** |
| MMI 070-V05-D-PB | **0307503** |
| MMI 070-V05-E-CN | **0307500** |
| MMI 070-V05-E-PB | **0307502** |
| Connection cables | |
| KA GGN1204-PB-00150-A | **0349750** |
| KA GGN1204-PB-00300-A | **0349751** |
| KA GGN1204-PB-00500-A | **0349752** |
| KA GGN1204-PB-01000-A | **0349753** |
| KA GGN1204-CN-00150-A | **0349770** |
| KA GGN1204-CN-00300-A | **0349771** |
| KA GGN1204-CN-00500-A | **0349772** |
| KA GGN1204-CN-01000-A | **0349773** |
| KA GLN2304-LK-00150-H | **0349870** |
| KA GLN2304-LK-00300-H | **0349871** |
| KA GLN2304-LK-00500-H | **0349872** |
| KA GLN2304-LK-01000-H | **0349873** |
| KA GGN2304-LK-00150-H | **0349874** |
| KA GGN2304-LK-00300-H | **0349875** |
| KA GGN2304-LK-00500-H | **0349876** |
| KA GGN2304-LK-01000-H | **0349877** |

## Connection cap DMI

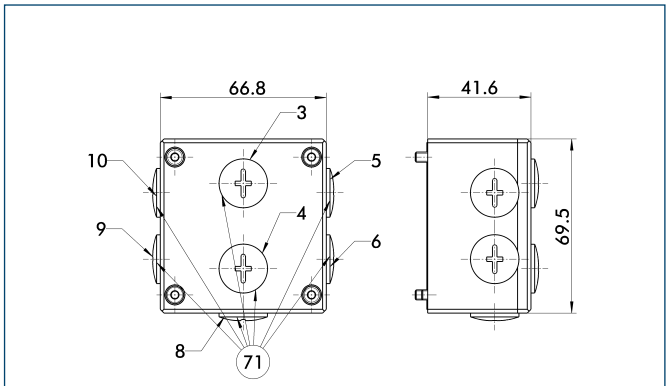


71 M 16 x 1.5 screw connection for cable guiding

| Description | ID |
|---|---|
| Connection cap sealed mechatronic interface (DMI) | |
| DMI 070-V05-B | **0307732** |
| Options | |
| DMI V5 BLUETOOTH | **0349050** |

You can find more detailed information and individual parts of the above-mentioned accessories in the “Accessories” catalog section.

# PEH 50





## Gripping force, O.D. gripping

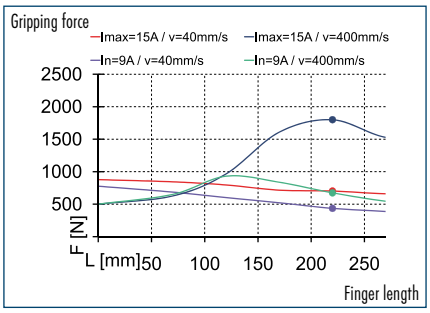


## Speed

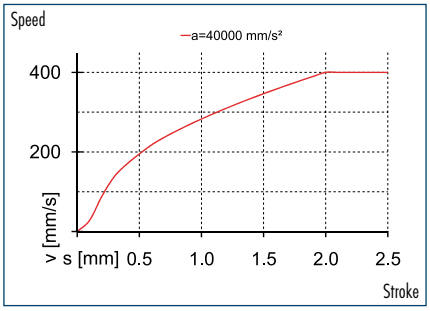


## Finger load

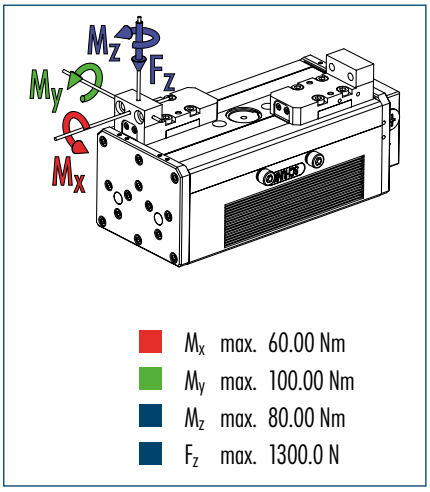


- $M_x$ max. 60.00 Nm
- $M_y$ max. 100.00 Nm
- $M_z$ max. 80.00 Nm
- $F_z$ max. 1300.0 N

ⓘ The indicated moments and forces are static values, apply per base jaw and may occur simultaneously. $M_y$ may arise in addition to the moment generated by the gripping force itself. If the max. permitted finger weight is exceeded, it is imperative to throttle the air pressure so that the jaw movement occurs without any hitting or bouncing. Service life may be reduced.

## Technical data

| Description | | PEH 50 |
|---|---|---|
| **ID** | | **0306064** |
| **General technical data gripper** | | |
| Stroke per finger | [mm] | 100 |
| Minimum/maximum gripping force | [N] | 150/1800 |
| Weight | [kg] | 14.8 |
| Recommended workpiece weight | [kg] | 9 |
| Max. permitted finger length | [mm] | 270 |
| Max. permitted weight per finger | [kg] | 4 |
| IP class | | 41 |
| Min./max. ambient temperature | [°C] | 5/45 |
| Repeat accuracy | [mm] | 0.05 |
| Maximum speed | [mm/s] | 400 |
| Maximum acceleration | [mm/s²] | 40000 |
| **Electrical operating data gripper** | | |
| Power supply | [V DC] | 24 |
| Nominal current | [A] | 9 |
| Max. total current | [A] | 15 |
| Resolution | [Inc/U] | 1 |
| **Controller operating data** | | |
| Description | | **PTA-V5.3** |
| Implementation | | integrated |
| Power supply | [V DC] | 24 |
| Field bus interface | | CAN / PROFIBUS / I/O |
| Parametrized interface | | CAN / PROFIBUS / RS232 |

## Main view

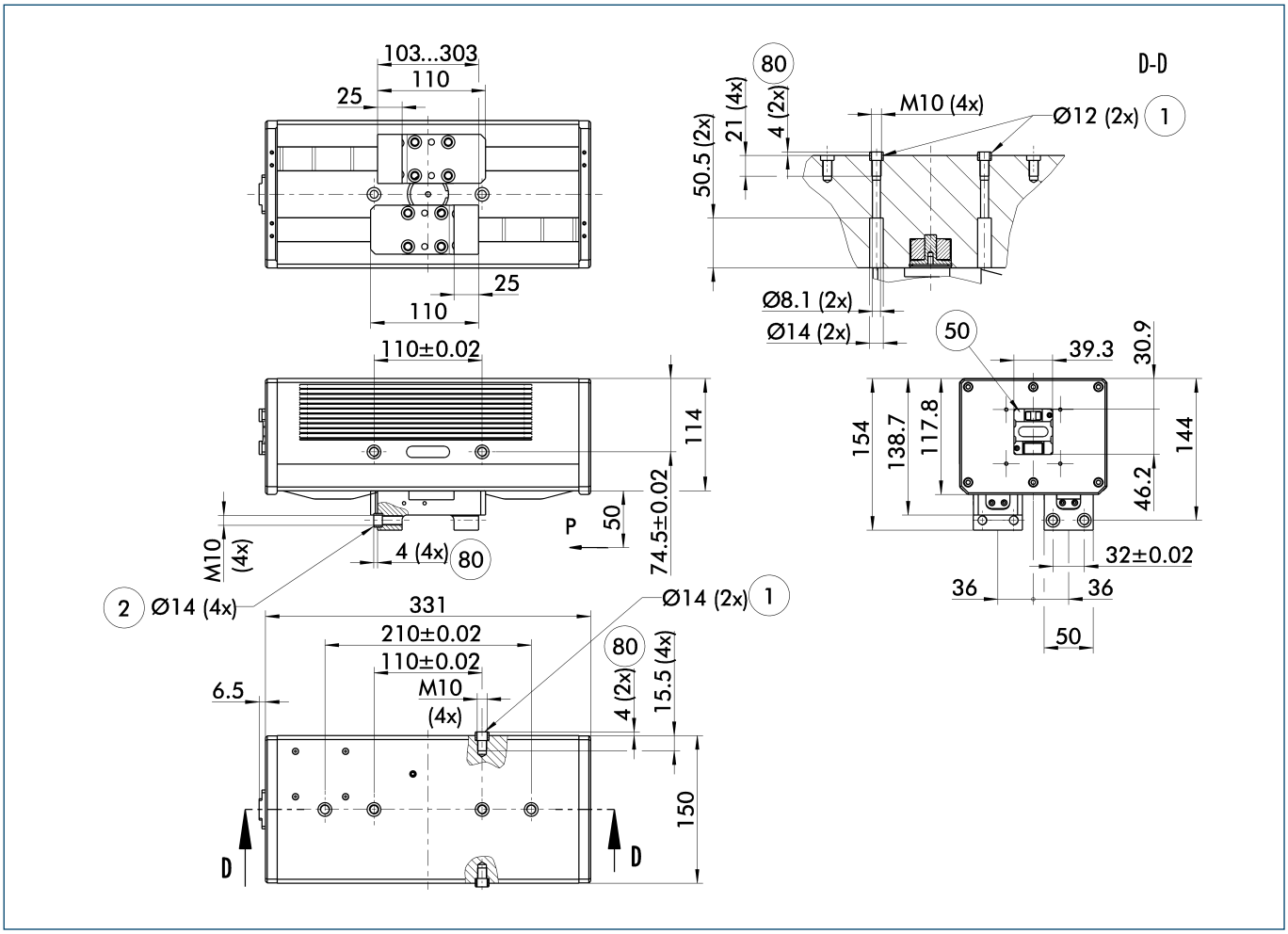


The drawing shows the gripper in the basic version with closed jaws, the dimensions do not include the options described below.

① Gripper connection
② Finger connection
50 Electronics connection
80 Depth of the centering sleeve hole in the matching part

## Connection cap MMI

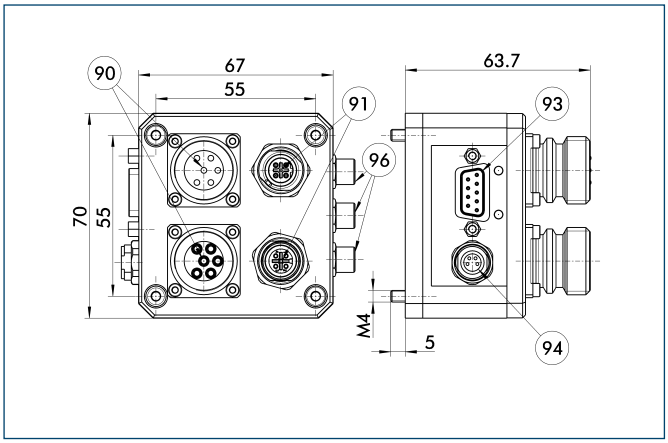


(90) Connection power supply (logic / load)
(91) Connection Feldbus
(93) Parametrized interface RS232
(94) Connection power supply service box (SSB)
(96) Connection external end switch

| Description | ID |
|---|---|
| Connection cap modular mechatronic interface (MMI) | |
| MMI 070-V05-D-CN | **0307501** |
| MMI 070-V05-D-PB | **0307503** |
| MMI 070-V05-E-CN | **0307500** |
| MMI 070-V05-E-PB | **0307502** |
| Connection cables | |
| KA GGN1204-PB-00150-A | **0349750** |
| KA GGN1204-PB-00300-A | **0349751** |
| KA GGN1204-PB-00500-A | **0349752** |
| KA GGN1204-PB-01000-A | **0349753** |
| KA GGN1204-CN-00150-A | **0349770** |
| KA GGN1204-CN-00300-A | **0349771** |
| KA GGN1204-CN-00500-A | **0349772** |
| KA GGN1204-CN-01000-A | **0349773** |
| KA GLN2304-LK-00150-H | **0349870** |
| KA GLN2304-LK-00300-H | **0349871** |
| KA GLN2304-LK-00500-H | **0349872** |
| KA GLN2304-LK-01000-H | **0349873** |
| KA GGN2304-LK-00150-H | **0349874** |
| KA GGN2304-LK-00300-H | **0349875** |
| KA GGN2304-LK-00500-H | **0349876** |
| KA GGN2304-LK-01000-H | **0349877** |

## Connection cap DMI

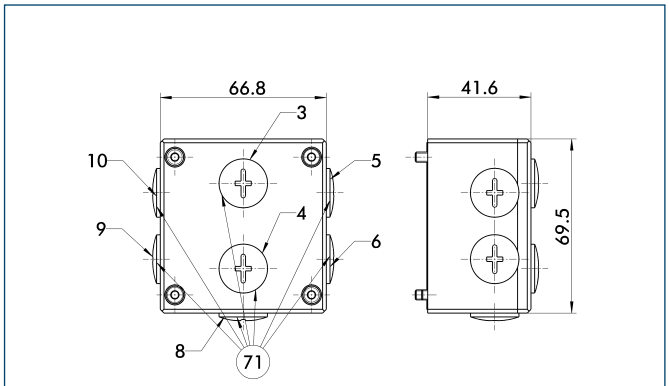


(71) M 16 x 1.5 screw connection for cable guiding

| Description | ID |
|---|---|
| Connection cap sealed mechatronic interface (DMI) | |
| DMI 070-V05-B | **0307732** |
| Options | |
| DMI V5 BLUETOOTH | **0349050** |

You can find more detailed information and individual parts of the above-mentioned accessories in the “Accessories” catalog section.

# LEG

## Electrical • 2-Finger Parallel Gripper • Long-stroke Gripper

**Size**
760

**Weight**
9 kg ... 11.6 kg

**Gripping force**
1050 N ... 1500 N

**Stroke per finger**
281 mm

**Workpiece weight**
15.75 kg ... 22.5 kg

## Application example

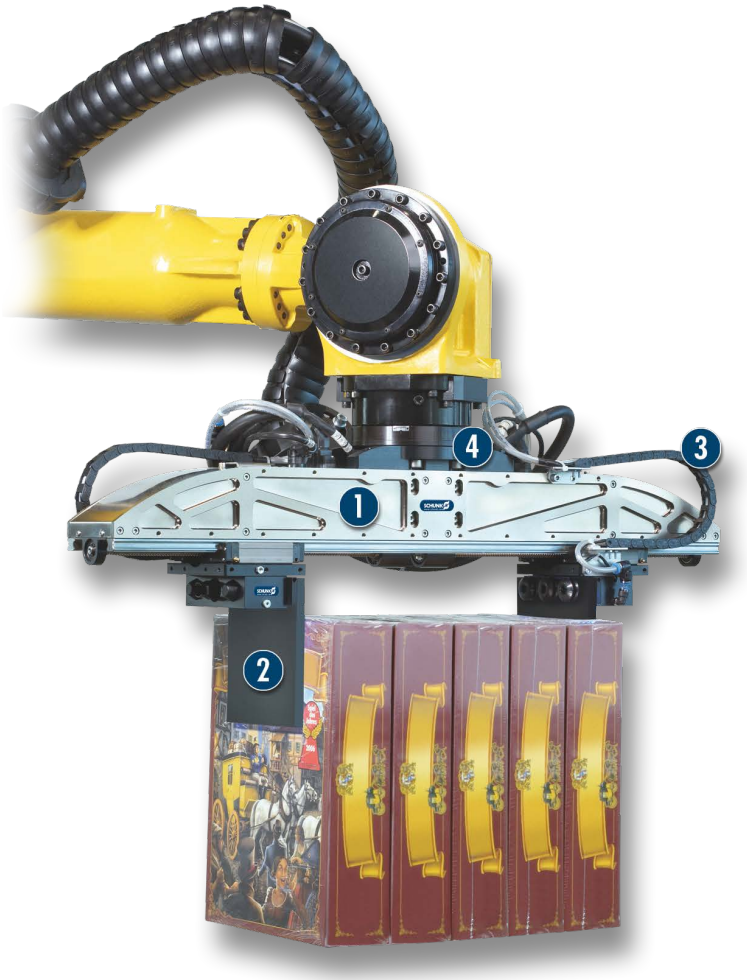


Gripping unit for top loading and palettizing tasks

1. 2-Finger Long-stroke Gripper LEG
2. Finger change system
3. Drag chain
4. ISO flange

## Long-stroke Gripper

light long-stroke gripper for flexible and highly dynamic handling of various components

## Field of application

Suitable for clean environments, very flexible gripping of various geometries and types of components. Due to the servo electric drives, the gripping position and the gripping force can be exactly determined.

## Your advantages and benefits

**Synchronized but also asynchronous moving of the fingers**

**Modular drive concept**
compatible to each robot control and open for various motors

**Position and moment controlled motion of the gripper**
a great part variety can be covered by different sizes and dimensional stability

**Extremely long stroke**
2 x 0 ... 281 mm

**Passive finger change system available (optional)**
can be used manually or fully automatic, incl. energy feed-through

**High moment payloads due to the guiding**
suitable for using long gripper fingers

**Current robot adaptions available**
according to ISO 50, 63, 100, 125 and 160



## General note to the series

**Principle of function**
Ball screw

**Housing material**
Aluminum alloy, hard-anodized

**Base jaw material**
Aluminum alloy, hard-anodized

**Actuation**
via various servo-motors

**Warranty**
24 months (details, general terms and conditions and operation manuals can be downloaded under www.schunk.com)

**Scope of delivery**
Centering sleeves, centering pin, assembly and operating manual with declaration of incorporation.
Finger blanks are not included.

## Sectional diagram

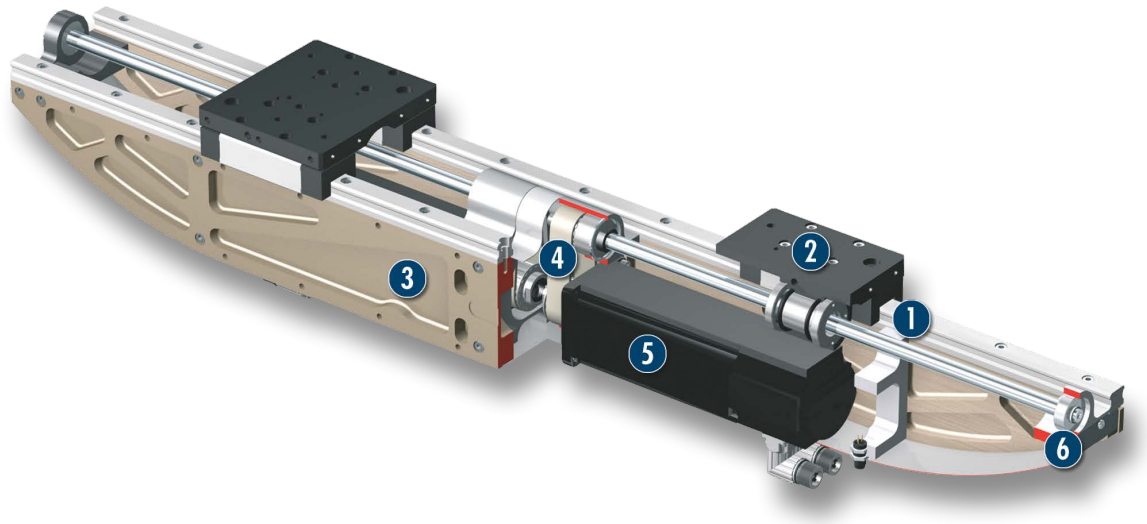


1 **Guidance**
precise gripping due to high-amperage smoothly running guidance

2 **Base jaw**
for the connection of workpiece-specific gripper fingers

3 **Housing**
weight-optimized due to FEM and topology examination

4 **Kinematics**
high moment payloads due to the ball screw

5 **Motor installation space**
for various motors

6 **Sensor system**
Optional: Sensors for reference run

## Functional description

One or two servo-motors actuated a bevel gear via a belt drive, and consequently move the base jaw.
With two drives every jaw can be moved individually from each other. During the actuation with a servo-motor, a coupling synchronizes the right-to-left and the left-to-right spindle with each other.

## Options and special information

Lubrication nipple connection for re-lubrication of the spindle and the guidances are located in the base jaws.

### Electrical actuation

The gripper can be actuated by motors of the mostly required robot manufacturers, or with other motors. Therefore the gripper can be actuated as the seventh axis by various robot manufacturers and just one user interface for robot and gripper is necessary.

## Accessories

Accessories from SCHUNK – the suitable supplement for maximum functionality, reliability and performance of all automation modules.

### Centering sleeves



### Inductive proximity switches



### Sensor cables



### Sensor Distributor

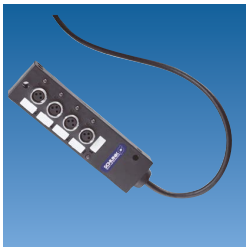

### Gripper pads

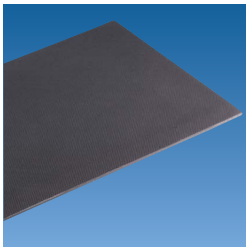



### Finger change system (on request)

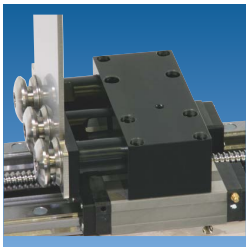

### Flange

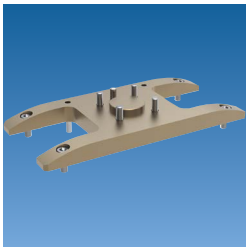

### Drag chain



ⓘ For the exact size of the required accessories, availability of this size and the designation and ID, please refer to the additional views at the end of the size in question. You will find more detailed information on our accessory range in the “Accessories” catalog section.

# LEG 760

**Electrical • 2-Finger Parallel Gripper • Long-stroke Gripper**



## Gripping force asynchronous version

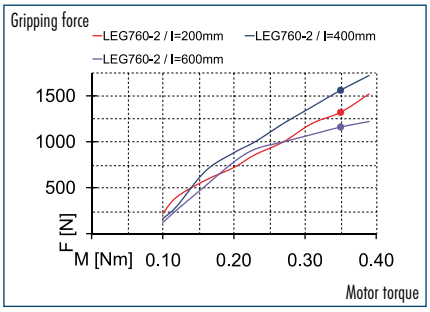


## Gripping force synchronous version

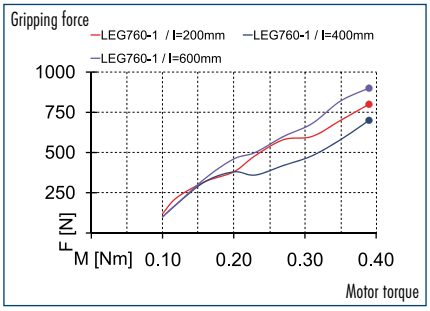


## Finger load

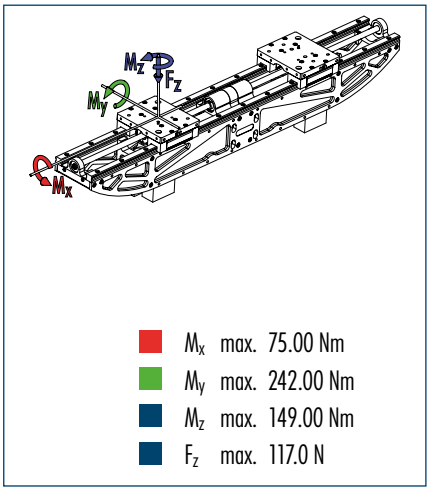


ⓘ The indicated moments and forces are static values, apply per base jaw and may occur simultaneously. $M_y$ may arise in addition to the moment generated by the gripping force itself. If the max. permitted finger weight is exceeded, it is imperative to throttle the air pressure so that the jaw movement occurs without any hitting or bouncing. Service life may be reduced.

## Technical data

| Asynchronous version for 2 motors | | LEG 760-2-FanucB05 | LEG 760-2-BOSCHMSK030B | LEG 760-2-KUKAMG8 | LEG 760-2-ELAU |
|---|---|---|---|---|---|
| **ID** | | **0308012** | **0308013** | **0308014** | **0308015** |
| Stroke per finger | [mm] | 281 | 281 | 281 | 281 |
| Minimum/maximum gripping force | [N] | 300/1500 | 300/1500 | 300/1500 | 300/1500 |
| Weight | [kg] | 10.4 | 10.8 | 11.6 | 10.8 |
| Recommended workpiece weight | [kg] | 22.5 | 22.5 | 22.5 | 22.5 |
| Max. permitted finger length | [mm] | 600 | 600 | 600 | 600 |
| Max. permitted weight per finger | [kg] | 10 | 10 | 10 | 10 |
| IP class | | 41 | 41 | 41 | 41 |
| Min./max. ambient temperature | [°C] | 5/65 | 5/65 | 5/65 | 5/65 |
| Repeat accuracy | [mm] | 0.05 | 0.05 | 0.05 | 0.05 |
| Maximum speed | [mm/s] | 270 | 600 | 300 | 550 |
| Maximum acceleration | [mm/s²] | 1500 | 1500 | 1500 | 1500 |
| Power supply | [V] | 400 | 400 | 400 | 400 |
| Nominal current | [A] | 3.6 | 1.5 | 1.4 | 1.1 |
| Max. total current | [A] | 6 | 2.8 | 1.8 | 1.4 |
| **OPTIONS and their characteristics** | | | | | |
| Synchronous version for 1 motor | | LEG 760-1-FanucB05 | LEG 760-1-BOSCHMSK030 | LEG 760-1-KUKAMG8 | LEG 760-1-ELAU |
| ID | | **0308002** | **0308003** | **0308004** | **0308005** |
| Minimum/maximum gripping force | [N] | 300/1050 | 300/1050 | 300/1050 | 300/1050 |
| Weight | [kg] | 9 | 9.2 | 9.6 | 9.2 |
| Recommended workpiece weight | [kg] | 15.75 | 15.75 | 15.75 | 15.75 |
| Max. total current | [A] | 8 | 3.8 | 2.4 | 1.9 |

ⓘ Motors are not included in the sales price. Integration of further motors on request.

## Main view

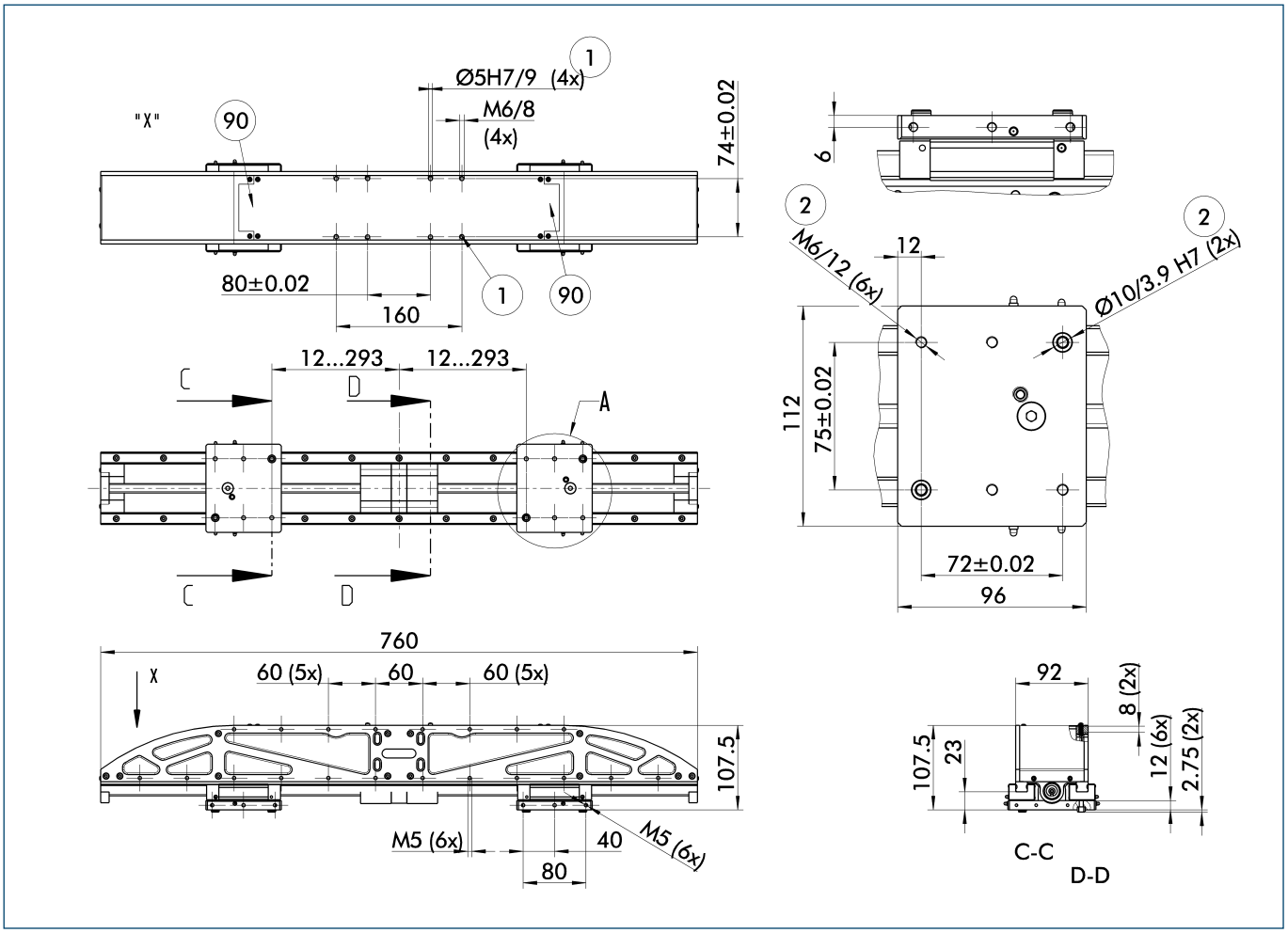


The drawing shows the unit in the basic version, the dimensions do not include the option described below.

① Gripper connection
② Finger connection

⑨⓪ Plug connector of the individual motor

## Interfering contours motor ELAU SH 055/8009

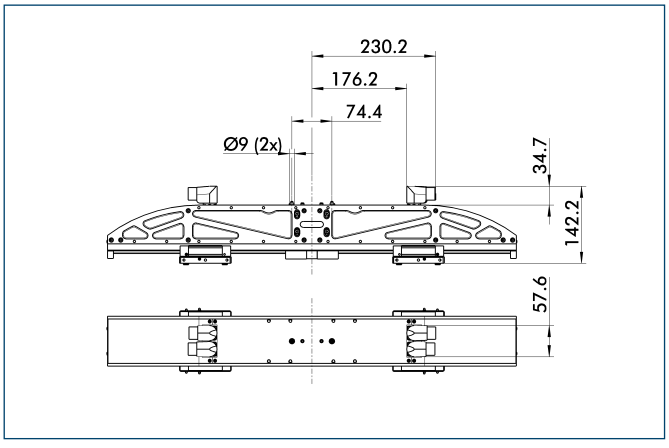


## Interfering contours motor KUKA M6_8_44_45_50

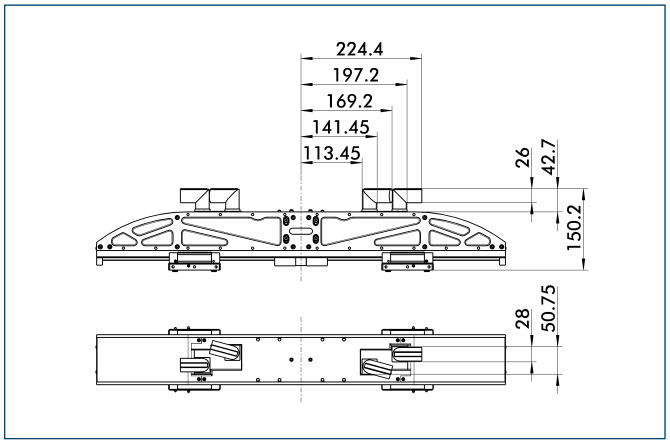

## Interfering contours motor Bosch MSK 030 B

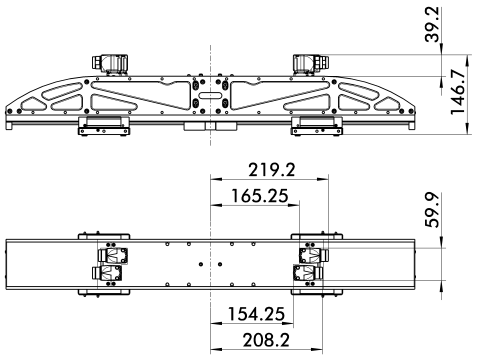


## Interfering contours motor Fanuc B0.5/500iS

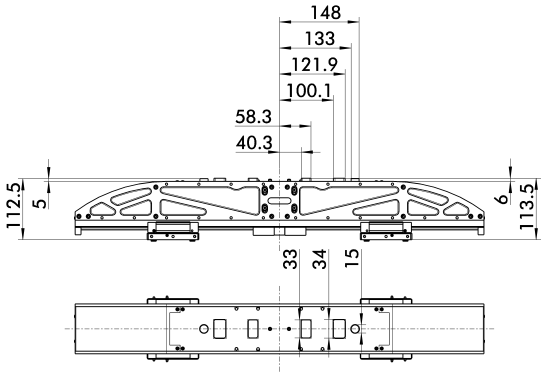


## Cable chain

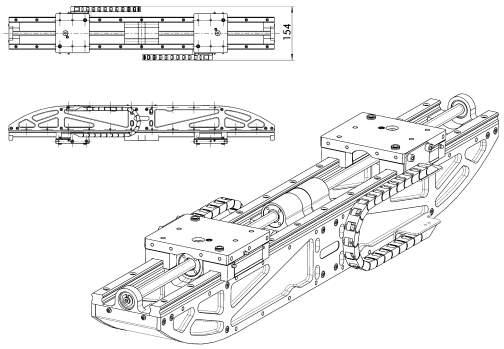

The mounting kit comprises two cable tracks, brackets for grippers and base jaws and fastening screws.

| Description | ID |
|---|---|
| Cable chain | |
| Cable chain LEG 760 | **0308098** |

## ISO flange in accordance with DIN ISO 50

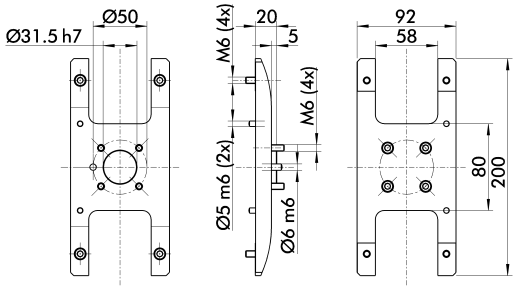


| Description | ID |
|---|---|
| ISO flanges | |
| ADF 050 | **0308090** |

## ISO flange in accordance with DIN ISO 63

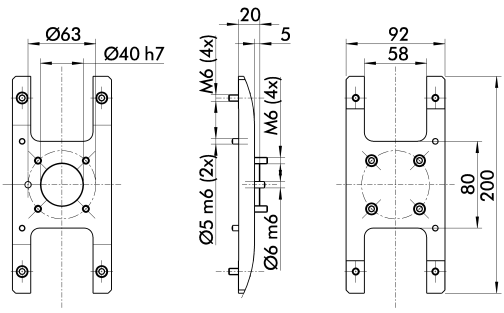


| Description | ID |
|---|---|
| ISO flanges | |
| ADF 063 | **0308091** |

## ISO flange in accordance with DIN ISO 100

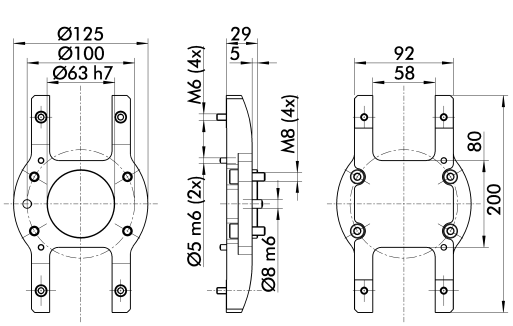


| Description | ID |
|---|---|
| ISO flanges | |
| ADF 100 | **0308092** |

You can find more detailed information and individual parts of the above-mentioned accessories in the “Accessories” catalog section.

## ISO flange in accordance with DIN ISO 125

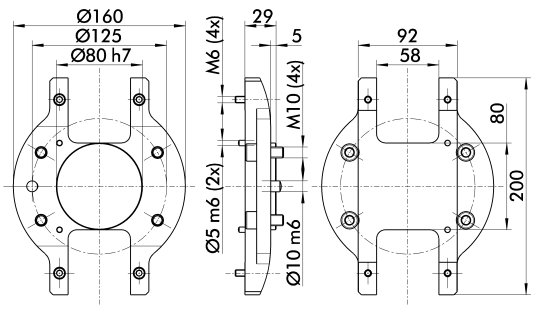


| Description | ID |
|---|---|
| ISO flanges | |
| ADF 125 | **0308093** |

## ISO flange in accordance with DIN ISO 160

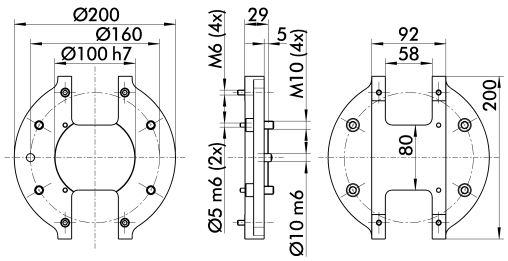


| Description | ID |
|---|---|
| ISO flanges | |
| ADF 160 | **0308094** |

You can find more detailed information and individual parts of the above-mentioned accessories in the “Accessories” catalog section.

# Electric Gripping Modules

## 3-Finger Centric Gripper



3-FINGER CENTRIC GRIPPER


| Series | Size | Page |
|---|---|---|
| **Universal Gripper** | | |
| EZN | | 1278 |
| EZN | 64 | 1282 |
| EZN | 100 | 1286 |

# EZN

**Electrical • 3-Finger Centric Gripper • Universal Gripper**

**Sizes**
64 ... 100

**Weight**
0.98 kg ... 2.3 kg

**Gripping force**
500 N ... 800 N

**Stroke per finger**
6 mm ... 10 mm

**Workpiece weight**
2.5 kg ... 4 kg

## Application example




**Connection via adapters to robots for handling all kinds of components – a complete application solution without pneumatics**

1 **EZN servo-electric 3-Finger Centric Gripper**

## Universal Gripper

servo-electric 3-finger centric gripper with large gripping force and high moment capabilities thanks to multiple-tooth guide

## Field of application

Ideal standard solution for numerous fields of application. Highly versatile thanks to controlled gripping force, position and speed.

## Your advantages and benefits

**Drive design of servo-motor**
for flexible use

**with external electronics**
for simple integration in existing servo-controlled concepts via Profibus-DP, CAN-Bus

**Pre-positioning capability**
to reduce cycle times through a short working stroke

**Robust multi-tooth guidance**
for precise handling

**High maximum moments possible**
suitable for using long gripper fingers

**Fastening at one gripper side in two screw directions**
for universal and flexible gripper assembly



## General note to the series

**Principle of function**
Wedge-hook kinematics

**Housing material**
Aluminum alloy, hard-anodized

**Base jaw material**
Steel

**Actuation**
servo-electric, via brushless DC servo-motor. For actuation of the gripper a servo controller is required. We recommend the MCS-12.

**Warranty**
24 months (details, general terms and conditions and operation manuals can be downloaded under www.schunk.com)

**Scope of delivery**
CD-ROM with SCHUNK software and assistant for commissioning, includes assembly- and operation manual, declaration of incorporation, enclosed pack with centering sleeves, functional module for control via Siemens S7-300/400. Finger blanks are not included.

## Sectional diagram

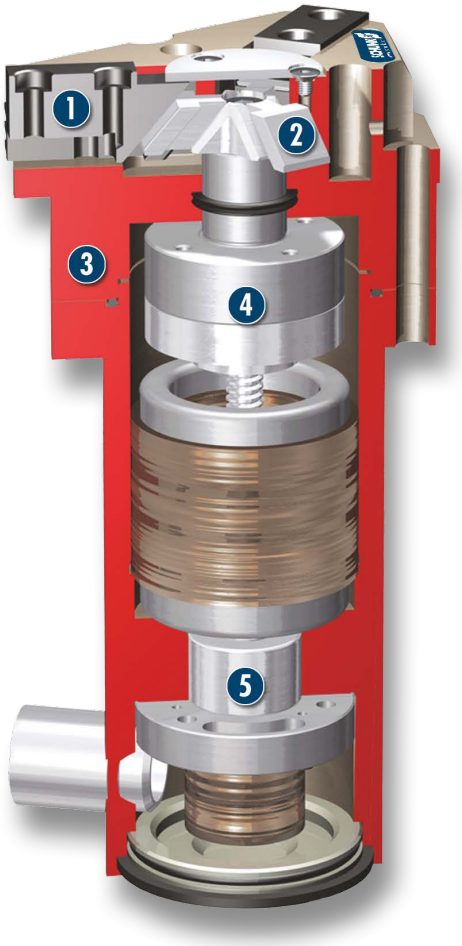


**1 Base jaw**
with multiple-tooth guidance for precise gripping even with long gripper fingers

**2 Wedge-hook design**
for high power transmission and centric gripping

**3 Housing**
weight-optimized through application of hard-anodized, high-strength aluminum alloy

**4 Kinematics**
roller-bearing mounted spindle nut system for transferring the rotational movement of the servo-motor into the axial movement of the piston rod

**5 Drive**
CD servo-motor with resolver

## Functional description

The spindle nut which is mounted on bearings, transfers the rotary motion of the servo-motor into an axial motion.

## Options and special information

Electrical actuation of the EZN gripper is carried out via the appropriate MCS-12 control electronics. Integration of the control electronics into the higher-ranking control plan can be implemented via the communication interfaces Profibus, CAN-bus or conventional digital inputs/ outputs. For Bus communication, the SCHUNK Motion Protocol (SMP) is used.
This enables you to create industrial bus networks, and ensures easy integration in control systems. If integration takes place simply by terminal signals, gripping parameters such as force, position and speed are predefined, and the different operating modes are defined by digital and analog inputs. The gripper status can be monitored by means of digital outputs, or via the Feldbus.

## Accessories

Accessories from SCHUNK – the suitable supplement for maximum functionality, reliability and performance of all automation modules.

### Centering sleeves



### Finger blanks



### Quick-change Jaw System



### Force measuring jaws



### Protection cover



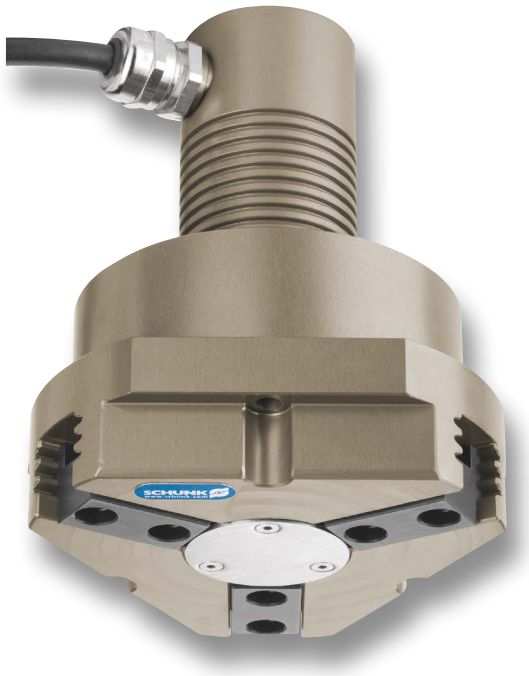

### Control unit



ⓘ For the exact size of the required accessories, availability of this size and the designation and ID, please refer to the additional views at the end of the size in question. You will find more detailed information on our accessory range in the “Accessories” catalog section.

## General note to the series

### Gripping force

is the arithmetic total of the gripping force applied to each finger at distance P (see illustration) measured from the upper edge of the gripper.

### Finger length

The finger length is measured from the upper edge of the gripper housing in the direction of the main axis.

### Repeat accuracy

is defined as the spread of the limit position after 100 consecutive strokes.

### Workpiece weight

The recommended workpiece weight is calculated for a force-type connection with a coefficient of friction of 0.1 and a safety factor of 2 against slippage of the workpiece on acceleration due to gravity g. Considerably heavier workpiece weights are permitted with form-fit gripping.

### Currents

The indicated nominal currents can be actuated permanently. With regard to all the currents which are ranging above the nominal current up to the maximum current, the notes of the individual product documentation has to be respected.

# EZN 64

**Electrical • 3-Finger Centric Gripper • Universal Gripper**



## Gripping force

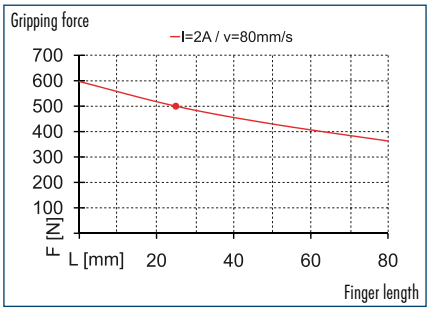


## Speed

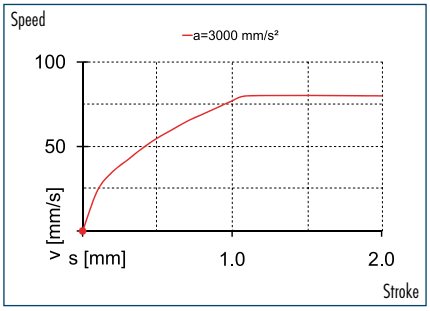


## Finger load

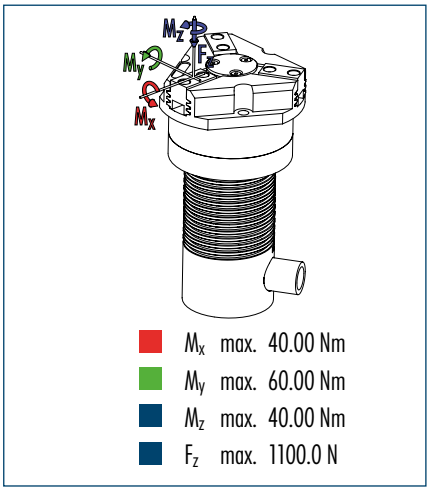


ⓘ The indicated moments and forces are static values, apply per base jaw and may occur simultaneously. $M_y$ may arise in addition to the moment generated by the gripping force itself. If the max. permitted finger weight is exceeded, it is imperative to throttle the air pressure so that the jaw movement occurs without any hitting or bouncing. Service life may be reduced.

## Technical data

| Description | | EZN 64 |
|---|---|---|
| **ID** | | **0306110** |
| **General technical data gripper** | | |
| Stroke per finger | [mm] | 6 |
| Minimum/maximum gripping force | [N] | 140/500 |
| Weight | [kg] | 0.98 |
| Recommended workpiece weight | [kg] | 2.5 |
| Max. permitted finger length | [mm] | 80 |
| Max. permitted weight per finger | [kg] | 0.35 |
| IP class | | 41 |
| Min./max. ambient temperature | [°C] | 5/55 |
| Repeat accuracy | [mm] | 0.01 |
| Maximum speed | [mm/s] | 80 |
| Maximum acceleration | [mm/s²] | 3000 |
| **Electrical operating data gripper** | | |
| Power supply | [V] | 24 |
| Nominal current | [A] | 2 |
| Max. total current | [A] | 4 |
| Resolution | [Inc/U] | 10 |
| **Controller operating data** | | |
| Description | | **MCS-12 (EGN/EZN)** |
| ID | | **0307010** |
| Implementation | | external |
| Power supply | [V DC] | 24 |
| Field bus interface | | CAN / PROFIBUS / I/O |
| Parametrized interface | | CAN / PROFIBUS / RS232 |

## Main view

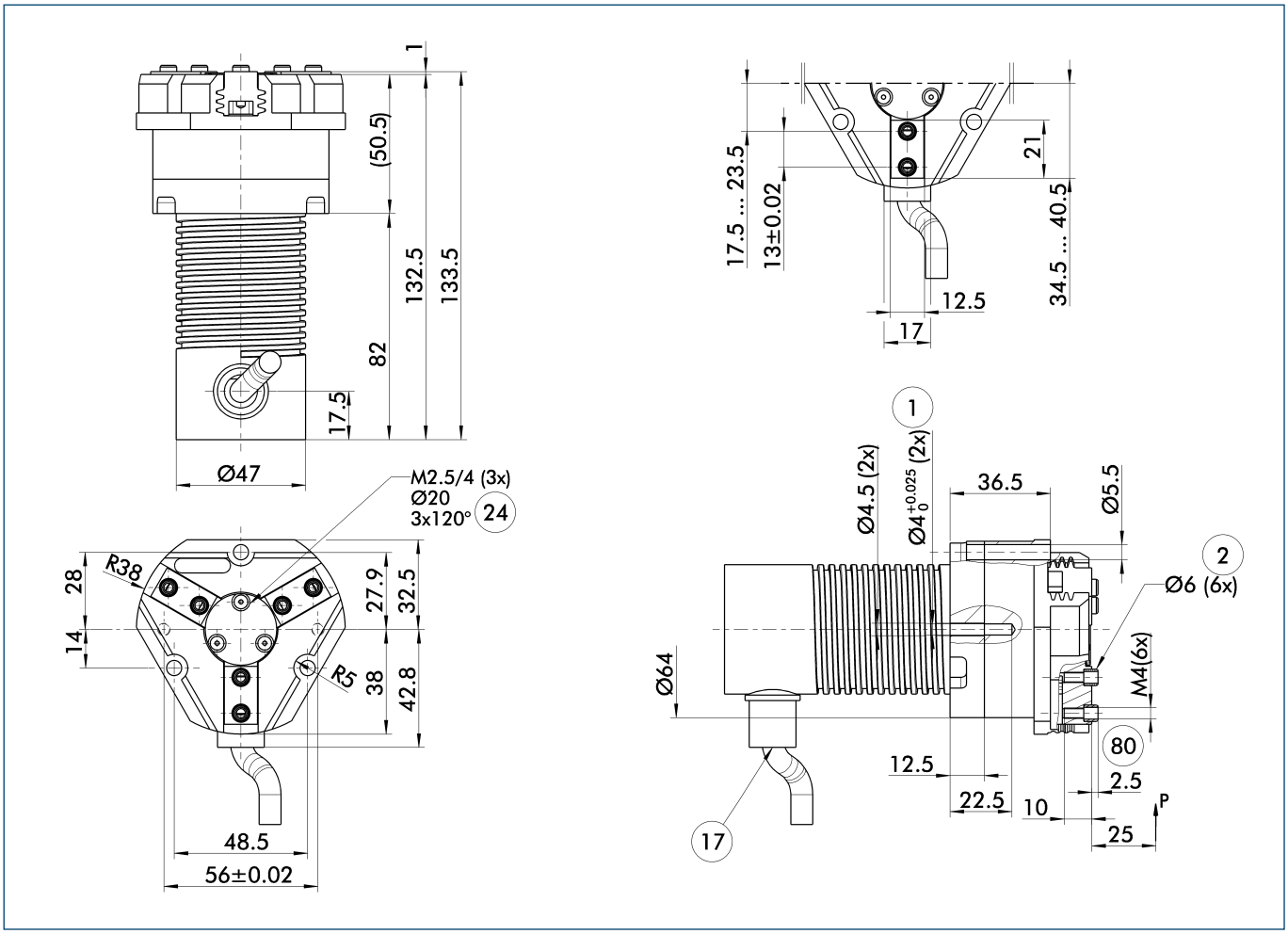


The drawing shows the gripper in the basic version with closed jaws, the dimensions do not include the options described below.

① Gripper connection
② Finger connection
⑰ Cable outlet
㉔ Bolt circle
㉚ Depth of the centering sleeve hole in the matching part

## Quick-change Jaw System

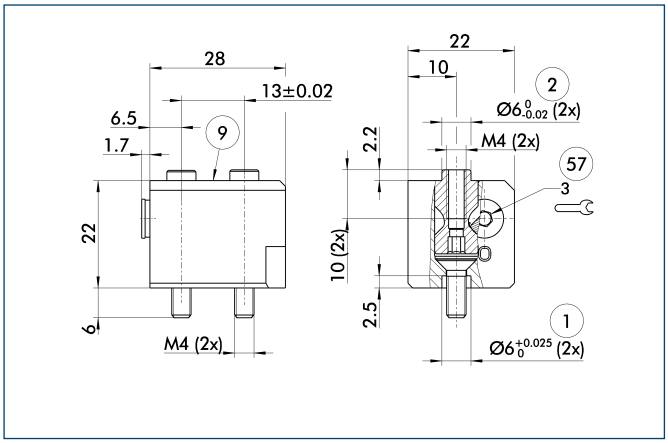


① Gripper connection
② Finger connection
⑨ For mounting screw connection diagram, see basic version
⑰ Locking

The BSWS quick-change jaw system enables top jaws to be changed on the gripper manually and rapidly. An adapter (BSWS-A) and a base (BSWS-B) are required for each gripper jaw.
For a reverse assembly without height set-up, one adapter (BSWS-A) and a kit (BSWS-U) per gripper jaw are required. Another effect of the BSWS-U is, that there are no disturbing fastening bores in the finger contour.

| Description | ID |
|---|---|
| Quick-change Jaw System adapter | |
| BSWS-A 64 | 0303022 |
| Quick-change Jaw System base | |
| BSWS-B 64 | 0303023 |

## Universal intermediate jaw

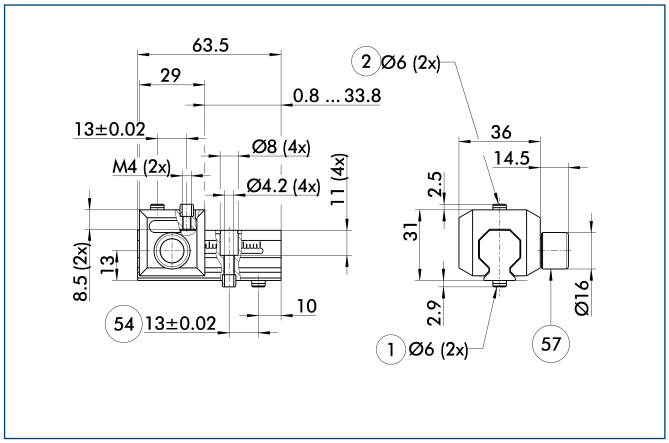


① Gripper connection
② Finger connection
⑭ Optional right or left connection
⑰ Locking

The universal intermediate jaw allows fast tool-free and reliable plugging and shifting of top jaws at the gripper.

| Description | ID | Grid dimension |
|---|---|---|
| Universal intermediate jaw | | |
| UZB 64 | 0300042 | 1.5 mm |

ⓘ The slide UZB-S can be removed completely and has to be ordered separately. Moreover, it allows a fast jaw change.

You can find more detailed information and individual parts of the above-mentioned accessories in the “Accessories” catalog section.

## Force measuring jaws

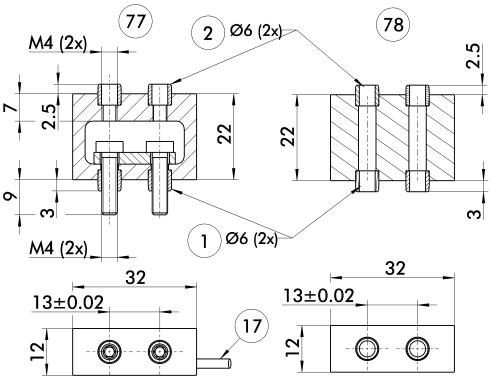


① Gripper connection
② Finger connection
⑰ Cable outlet
⑦⑦ Active intermediate jaws
⑦⑧ Passive intermediate jaws

Force measuring jaws measure gripping forces, but can also determine workpiece weights or dimensional deviations. There are active and passive intermediate jaws (FMS-ZBA or FMS-ZBP). At least one active force measuring jaw is required per gripper, the rest can be passive. For each active jaw, a FMS-A1 control unit and a FMS-A connection cable are required.

| Description | ID |
|---|---|
| Active intermediate jaws | |
| FMS-ZBA 64 | **0301832** |
| Passive intermediate jaws | |
| FMS-ZBP 64 | **0301833** |
| Electronic Processor | |
| FMS-A1 | **0301810** |
| Connection cables | |
| FMS-AK0200 | **0301820** |
| FMS-AK0500 | **0301821** |
| FMS-AK1000 | **0301822** |
| FMS-AK2000 | **0301823** |

## Finger blanks

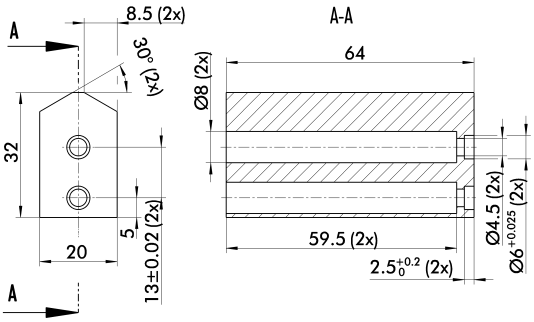


Finger blanks for customized subsequent machining

| Description | ID | Material | Scope of delivery |
|---|---|---|---|
| Finger blanks | | | |
| ABR-plus 64 | **0300010** | Aluminum | 1 |
| SBR-plus 64 | **0300020** | 16 MnCr 5 | 1 |

You can find more detailed information and individual parts of the above-mentioned accessories in the “Accessories” catalog section.

# EZN 100

**Electrical • 3-Finger Centric Gripper • Universal Gripper**

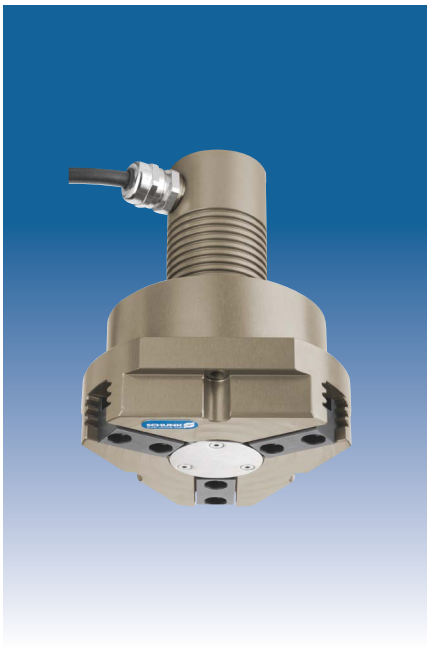

## Gripping force

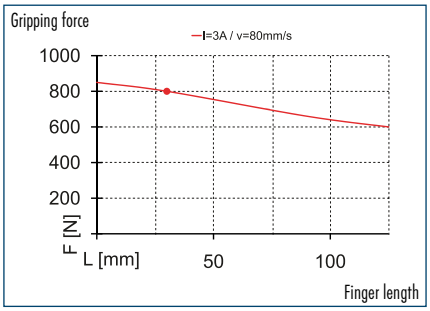


## Speed

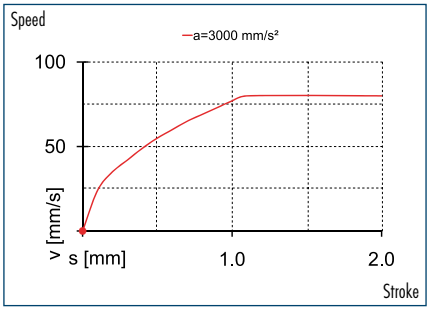


## Finger load

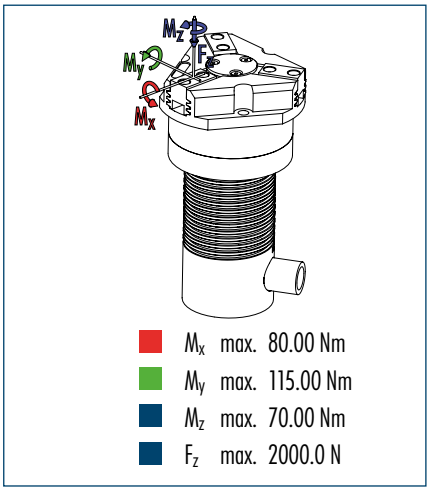


ⓘ The indicated moments and forces are static values, apply per base jaw and may occur simultaneously. $M_y$ may arise in addition to the moment generated by the gripping force itself. If the max. permitted finger weight is exceeded, it is imperative to throttle the air pressure so that the jaw movement occurs without any hitting or bouncing. Service life may be reduced.

## Technical data

| Description | | EZN 100 |
|---|---|---|
| **ID** | | **0306112** |
| **General technical data gripper** | | |
| Stroke per finger | [mm] | 10 |
| Minimum/maximum gripping force | [N] | 300/800 |
| Weight | [kg] | 2.3 |
| Recommended workpiece weight | [kg] | 4 |
| Max. permitted finger length | [mm] | 125 |
| Max. permitted weight per finger | [kg] | 1.1 |
| IP class | | 41 |
| Min./max. ambient temperature | [°C] | 5/55 |
| Repeat accuracy | [mm] | 0.01 |
| Maximum speed | [mm/s] | 80 |
| Maximum acceleration | [mm/s²] | 3000 |
| **Electrical operating data gripper** | | |
| Power supply | [V] | 24 |
| Nominal current | [A] | 3 |
| Max. total current | [A] | 4 |
| Resolution | [Inc/U] | 10 |
| **Controller operating data** | | |
| Description | | **MCS-12 (EGN/EZN)** |
| ID | | **0307010** |
| Implementation | | external |
| Power supply | [V DC] | 24 |
| Field bus interface | | CAN / PROFIBUS / I/O |
| Parametrized interface | | CAN / PROFIBUS / RS232 |

## Main view

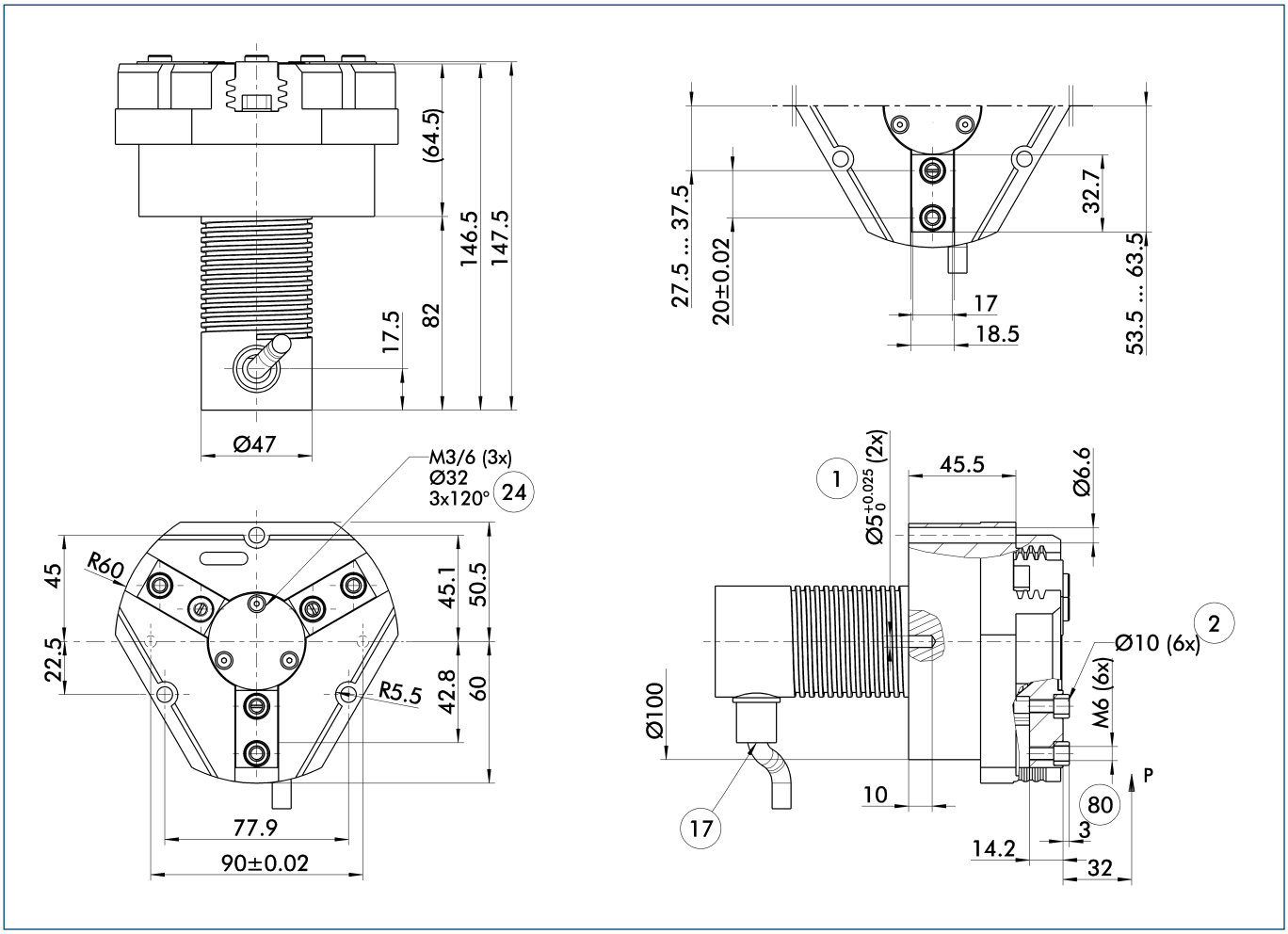


The drawing shows the gripper in the basic version with closed jaws, the dimensions do not include the options described below.

① Gripper connection
② Finger connection
⑰ Cable outlet
㉔ Bolt circle
㉚ Depth of the centering sleeve hole in the matching part

## Quick-change Jaw System

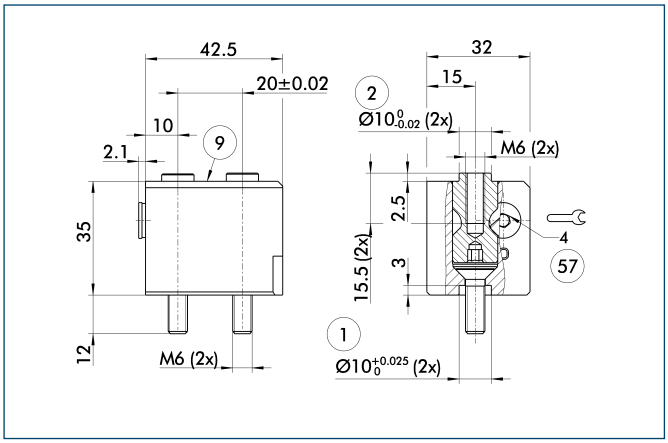


① Gripper connection
② Finger connection
⑨ For mounting screw connection diagram, see basic version
㊼ Locking

The BSWS quick-change jaw system enables top jaws to be changed on the gripper manually and rapidly. An adapter (BSWS-A) and a base (BSWS-B) are required for each gripper jaw.
For a reverse assembly without height set-up, one adapter (BSWS-A) and a kit (BSWS-U) per gripper jaw are required. Another effect of the BSWS-U is, that there are no disturbing fastening bores in the finger contour.

| Description | ID |
|---|---|
| Quick-change Jaw System adapter | |
| BSWS-A 100 | **0303026** |
| Quick-change Jaw System base | |
| BSWS-B 100 | **0303027** |

## Universal intermediate jaw

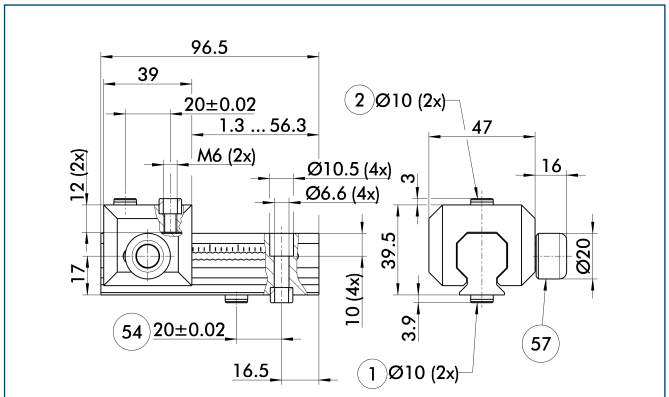


① Gripper connection
② Finger connection
㊹ Optional right or left connection
㊼ Locking

The universal intermediate jaw allows fast tool-free and reliable plugging and shifting of top jaws at the gripper.

| Description | ID | Grid dimension |
|---|---|---|
| Universal intermediate jaw | | |
| UZB 100 | **0300044** | 2.5 mm |
| UZB-S 100 | **5518272** | 2.5 mm |

ⓘ The slide UZB-S can be removed completely and has to be ordered separately. Moreover, it allows a fast jaw change.

You can find more detailed information and individual parts of the above-mentioned accessories in the “Accessories” catalog section.

## Force measuring jaws

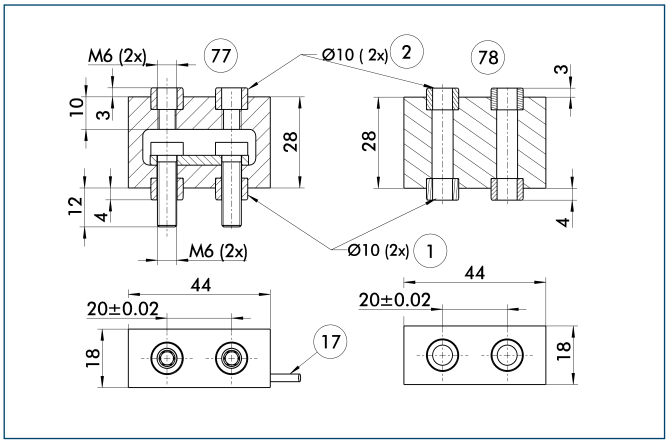


① Gripper connection
② Finger connection
⑰ Cable outlet
⑦⑦ Active intermediate jaws
⑦⑧ Passive intermediate jaws

Force measuring jaws measure gripping forces, but can also determine workpiece weights or dimensional deviations. There are active and passive intermediate jaws (FMS-ZBA or FMS-ZBP). At least one active force measuring jaw is required per gripper, the rest can be passive. For each active jaw, a FMS-A1 control unit and a FMS-A connection cable are required.

| Description | ID |
|---|---|
| Active intermediate jaws | |
| FMS-ZBA 100 | **0301836** |
| Passive intermediate jaws | |
| FMS-ZBP 100 | **0301837** |
| Electronic Processor | |
| FMS-A1 | **0301810** |
| Connection cables | |
| FMS-AK0200 | **0301820** |
| FMS-AK0500 | **0301821** |
| FMS-AK1000 | **0301822** |
| FMS-AK2000 | **0301823** |

## Finger blanks

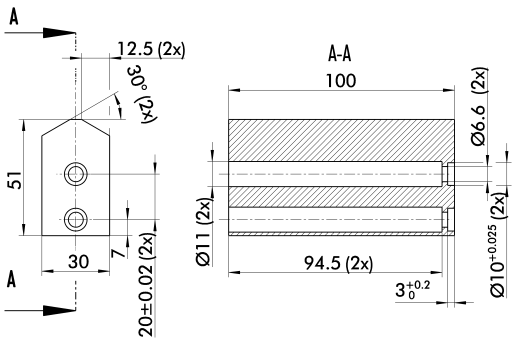


Finger blanks for customized subsequent machining

| Description | ID | Material | Scope of delivery |
|---|---|---|---|
| Finger blanks | | | |
| ABR-plus 100 | **0300012** | Aluminum | 1 |
| SBR-plus 100 | **0300022** | 16 MnCr 5 | 1 |

You can find more detailed information and individual parts of the above-mentioned accessories in the “Accessories” catalog section.

# Special Gripper



SPECIAL GRIPPER


| Series | Size | Page |
|---|---|---|
| **Food Gripper** | | |
| LMG | | 1292 |
| LMG | 44 | 1296 |
| LMG | 64 | 1298 |
| **O-ring Assembly Gripper** | | |
| ORG | | 1300 |
| ORG | 85 | 1306 |
| **Gripper with shaft interface** | | |
| GSW-B | | 1310 |
| GSW-B 2-Finger | 50 .. 100 | 1314 |
| GSW-B 3-Finger | 50 .. 100 | 1320 |
| **Vacuum Gripper** | | |
| GSW-V | | 1324 |
| GSW-V | 20 | 1328 |
| GSW-V | 25 | 1330 |
| GSW-V | 32 | 1332 |
| **Cleaning Unit** | | |
| RGG | | 1334 |
| RGG | 20 | 1338 |


# Only some more Special Gripper ...

### Heavy Duty Gripper SLG for 700 kg and more

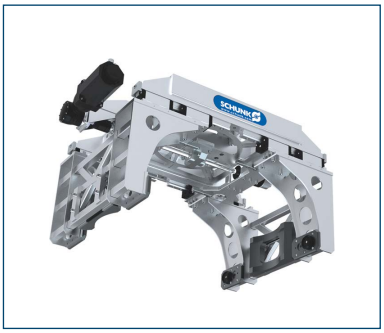

### Pneumatic Compact Clamping Vice PKS of the automotive industry



### Double Gripper UFG for loading and unloading



### Multi-purpose Gripping System LEG of packaging industry

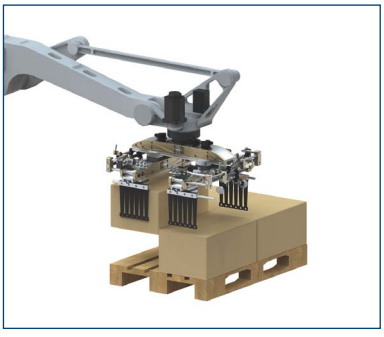

### Solar Cell Gripper SZG of the solar industry

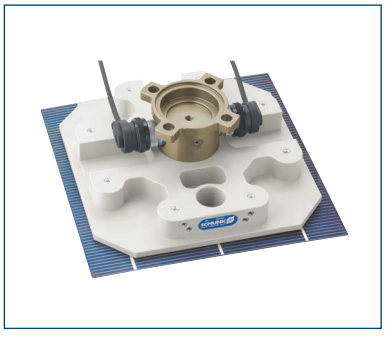

### Aseptic Gripper of the pharmaceutical industry



**... much more ... Call us.**

# LMG

## Special Gripper • Food Gripper

**Sizes**
44 ... 64

**Weight**
0.95 kg ... 3.3 kg

**Gripping moment**
8.2 Nm ... 31.5 Nm

**Angle per jaw**
90°

**Workpiece weight**
0.9 kg ... 2.2 kg

## Application example

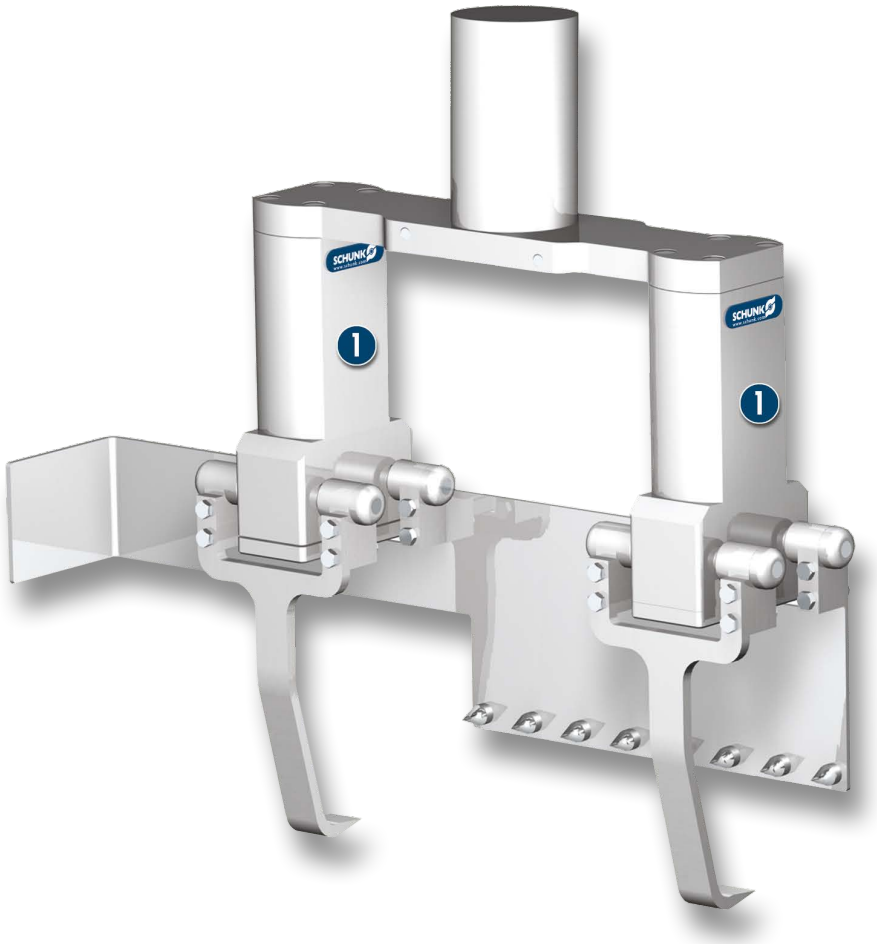


Double gripper unit for handling lines of cutlets and large pieces of meat

1 Food gripper LMG

## Food Gripper
Gripper in easy-to-clean design for handling food




## Field of application
For gripping food and other substances requiring extreme hygiene in conformity with DIN EN 1672-2 “Hygienic Design”

## Your advantages and benefits

**Polished stainless steel housing**
for complete cleaning and corrosion resistance

**Opening angle adjustable from 20° to 180°**
for a versatile field of applications

**Air supply via hose-free direct connection**
for the flexible supply of compressed air in all automation systems

**Completely sealed mechanical parts (IP69K)**
for use in extreme working conditions

**Always with gripping force safety device**
to prevent loss of food following a drop in air pressure

## General note to the series

**Principle of function**
positively driven crank system

**Housing material**
Polished stainless steel

**Base jaw material**
Polished stainless steel

**Warranty**
24 months (details, general terms and conditions and operation manuals can be downloaded under www.schunk.com)

**Scope of delivery**
O-rings for direct connection, centering sleeves, flat seal for interface gripper/adaption, assembly and operating manual with declaration of incorporation

**Gripping force maintenance device**
via integrated spring

## Sectional diagram

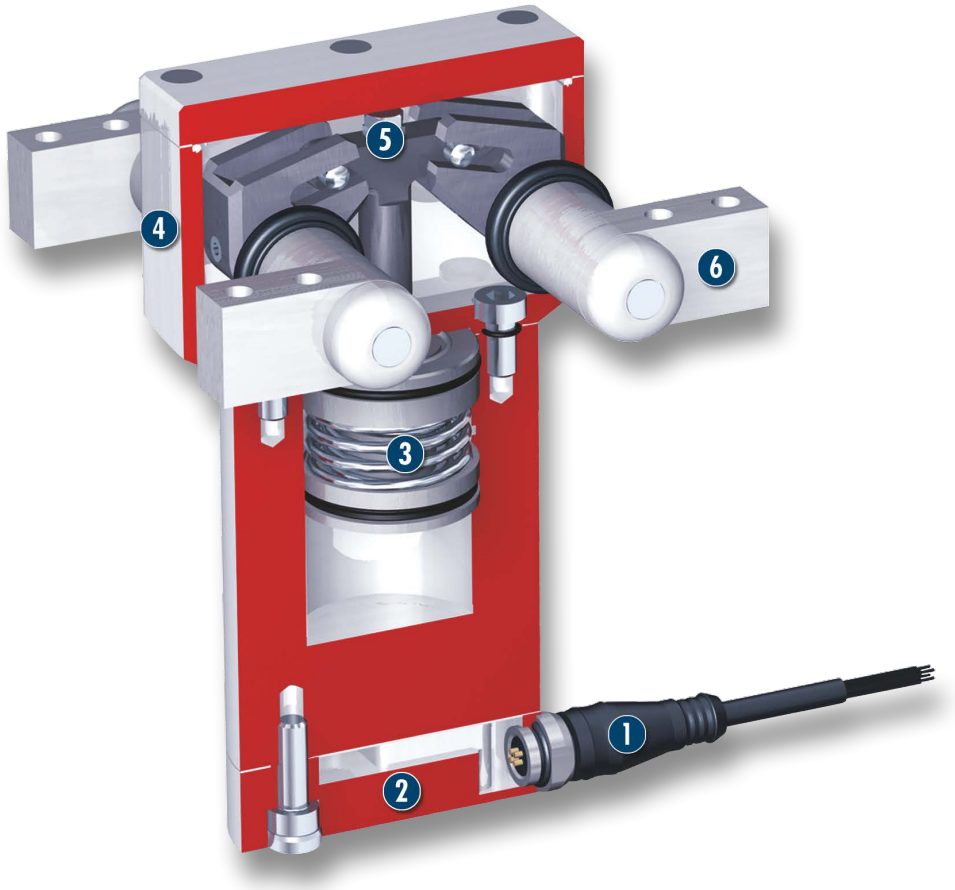


**1 Sensor monitoring (optional)**
Cable feed-through for sensor monitoring with magnetic sensors

**2 Energy connection**
Direct connection for hosefree supply of compressed air

**3 Gripping force maintenance device**
integrated spring for gripping force maintenance

**4 Polished stainless steel housing**

**5 Kinematics**
Slotted link gear for concentric gripping with large opening and closing movements

**6 Base jaws**
for the connection of workpiece-specific gripper fingers

## Functional description

The round piston is pressed up or down by compressed air. In the process, the two pins of the crank system move in unison and relative to the groove in the top jaws. In the gripping moment, these two pins reach the largest lever arm.

## Options and special information

An extended temperature range up to 130 °C is available as a special version.

### Version A (with monitoring)

Monitoring of the gripper status of version A is not an option, but an independent version. The sensors are integrated in the gripper. The sensors can be exchanged at SCHUNK only.

## Accessories

Accessories from SCHUNK – the suitable supplement for maximum functionality, reliability and performance of all automation modules.

### Centering sleeves



### Fittings



### Sensor cables



### Sensor Distributor

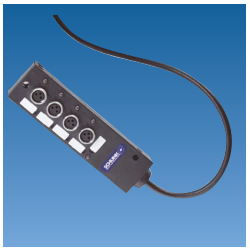

### Pressure maintenance valve






ⓘ For the exact size of the required accessories, availability of this size and the designation and ID, please refer to the additional views at the end of the size in question. You will find more detailed information on our accessory range in the “Accessories” catalog section.

## General note to the series

### Gripping moment
Gripping moment is the arithmetic total of gripping moments for each claw jaw.

### Finger length
The finger length is measured from the upper edge of the gripper housing in the direction of the main axis.

### Repeat accuracy
is defined as the spread of the limit position after 100 consecutive strokes.

### Workpiece weight
The recommended workpiece weight is calculated for a force-type connection with a coefficient of friction of 0.1 and a safety factor of 2 against slippage of the workpiece on acceleration due to gravity g. Considerably heavier workpiece weights are permitted with form-fit gripping.

### Closing and opening times
Closing and opening times are purely the times that the base jaws or fingers are in motion. Valve switching times, hose filling times or PLC reaction times are not included in the above times and must be taken into consideration when determining cycle times.

# LMG 44

**Special Gripper • Food Gripper**



## Gripping force, O.D. gripping

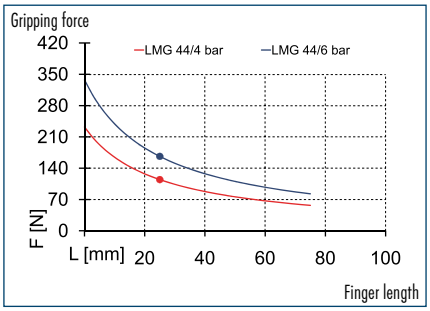


## Finger load

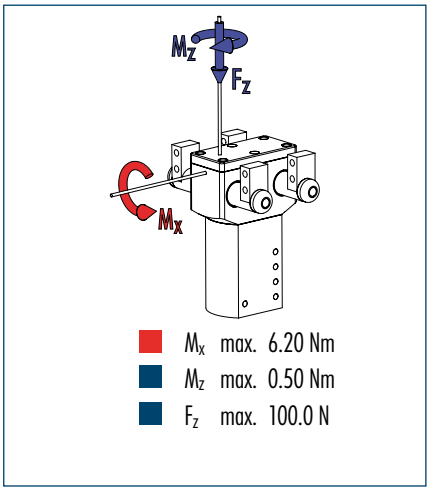


ⓘ The indicated moments and forces are statical values, apply for each base jaw and should not appear simultaneously. If the maximum admissible finger weight is exceeded, throttling is necessary in order to ensure a smooth jaw motion without jerks or bounces. The life-time may reduce.

## Technical data

| Description | | LMG 44 | LMG 44-A |
|---|---|---|---|
| ID | | 0372002 | 0372003 |
| Integrated monitoring | | No | Yes |
| Opening angle per jaw | [°] | 90 | 90 |
| Closed angle per jaw up to | [°] | 2 | 2 |
| Closing moment | [Nm] | 8.2 | 8.2 |
| Spring-actuated closing moment | [Nm] | 1.8 | 1.8 |
| Weight | [kg] | 0.95 | 1.2 |
| Recommended workpiece weight | [kg] | 0.9 | 0.9 |
| Air consumption per double stroke | [cm³] | 16 | 16 |
| Min./max. operating pressure | [bar] | 4/6.5 | 4/6.5 |
| Nominal operating pressure | [bar] | 6 | 6 |
| Closing/opening time | [s] | 0.4/0.5 | 0.4/0.5 |
| Max. permitted finger length | [mm] | 50 | 50 |
| Max. permitted weight per finger | [kg] | 0.09 | 0.09 |
| IP class | | 69K | 69K |
| Min./max. ambient temperature | [°C] | -25/90 | -25/90 |
| Repeat accuracy | [mm] | 0.1 | 0.1 |

## Main view

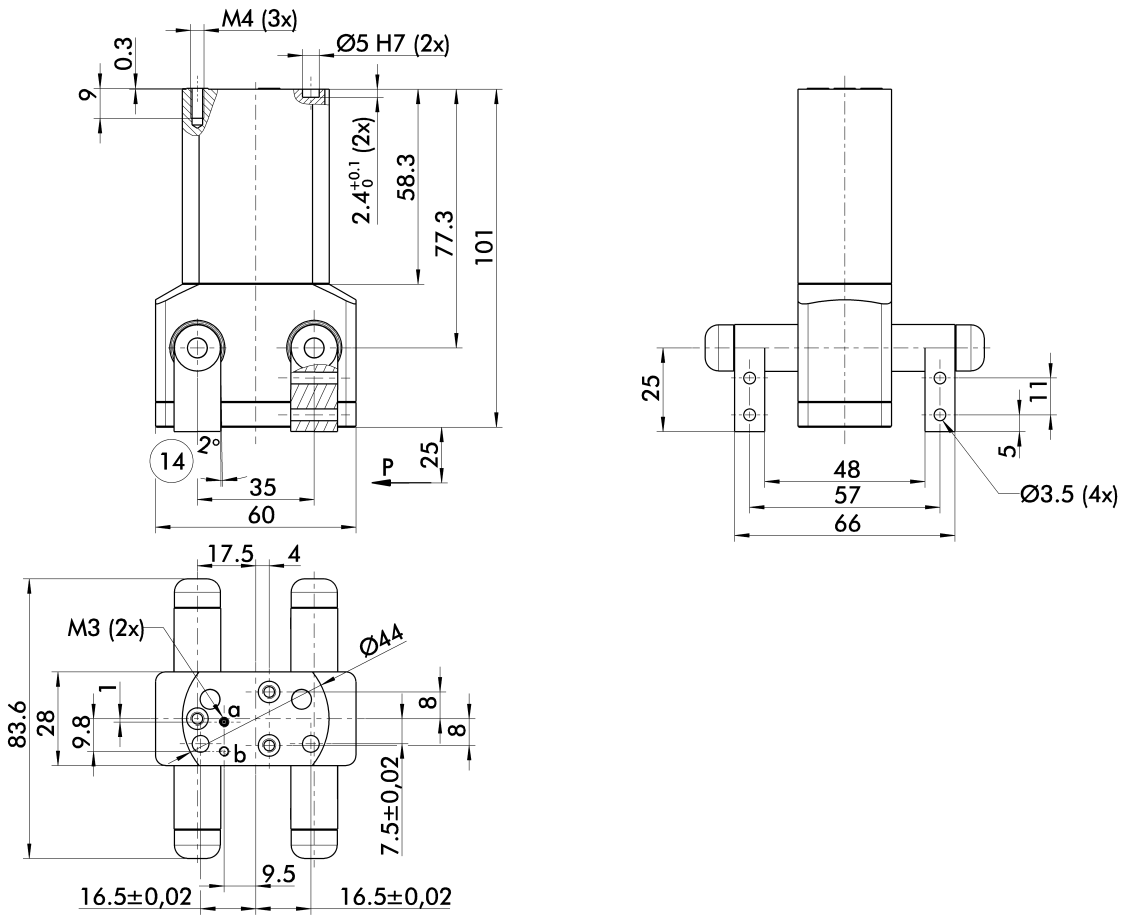


The drawing shows the gripper in the basic version with closed jaws, the dimensions do not include the options described below.

ⓘ The SDV-P pressure maintenance valve can be used as a gripping force maintenance device (see "Accessories" catalog section).

A, a Main/direct connection, gripper opening
B, b Main/direct connection, gripper closing

⑭ Clamping reserve per finger

## Hose-free direct connection

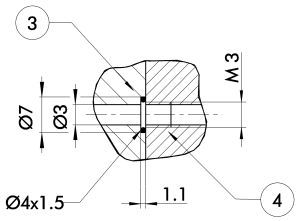


③ Adapter
④ Gripper

The direct connection is used for supplying compressed air without hoses. Instead, the pressure medium is fed through bore-holes in the mounting plate.

## Gripper with position monitoring

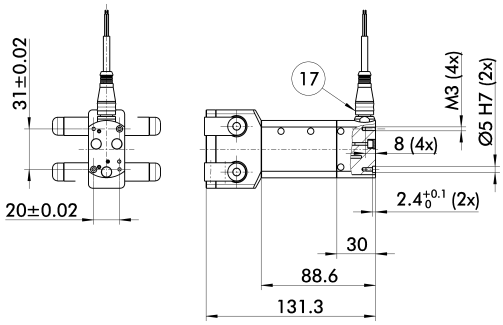


⑰ Cable outlet

Gripper with position monitoring via magnetic sensors

# LMG 64





## Gripping force, O.D. gripping

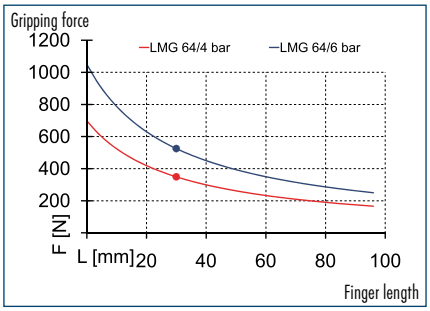


## Finger load

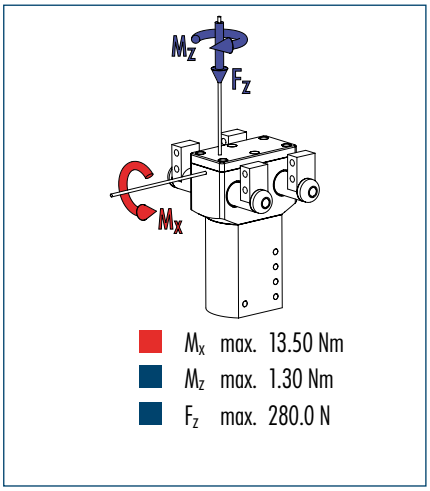


ⓘ The indicated moments and forces are statical values, apply for each base jaw and should not appear simultaneously. If the maximum admissible finger weight is exceeded, throttling is necessary in order to ensure a smooth jaw motion without jerks or bounces. The life-time may reduce.

## Technical data

| Description | | LMG 64 | LMG 64-A |
|---|---|---|---|
| ID | | 0372006 | 0372007 |
| Integrated monitoring | | No | Yes |
| Opening angle per jaw | [°] | 90 | 90 |
| Closed angle per jaw up to | [°] | 2 | 2 |
| Closing moment | [Nm] | 31.5 | 31.5 |
| Spring-actuated closing moment | [Nm] | 5.1 | 5.1 |
| Weight | [kg] | 3 | 3.3 |
| Recommended workpiece weight | [kg] | 2.2 | 2.2 |
| Air consumption per double stroke | [cm³] | 57 | 57 |
| Min./max. operating pressure | [bar] | 4/6.5 | 4/6.5 |
| Nominal operating pressure | [bar] | 6 | 6 |
| Closing/opening time | [s] | 0.4/0.5 | 0.4/0.5 |
| Max. permitted finger length | [mm] | 80 | 80 |
| Max. permitted weight per finger | [kg] | 0.26 | 0.26 |
| IP class | | 69K | 69K |
| Min./max. ambient temperature | [°C] | -25/90 | -25/90 |
| Repeat accuracy | [mm] | 0.1 | 0.1 |

## Main view

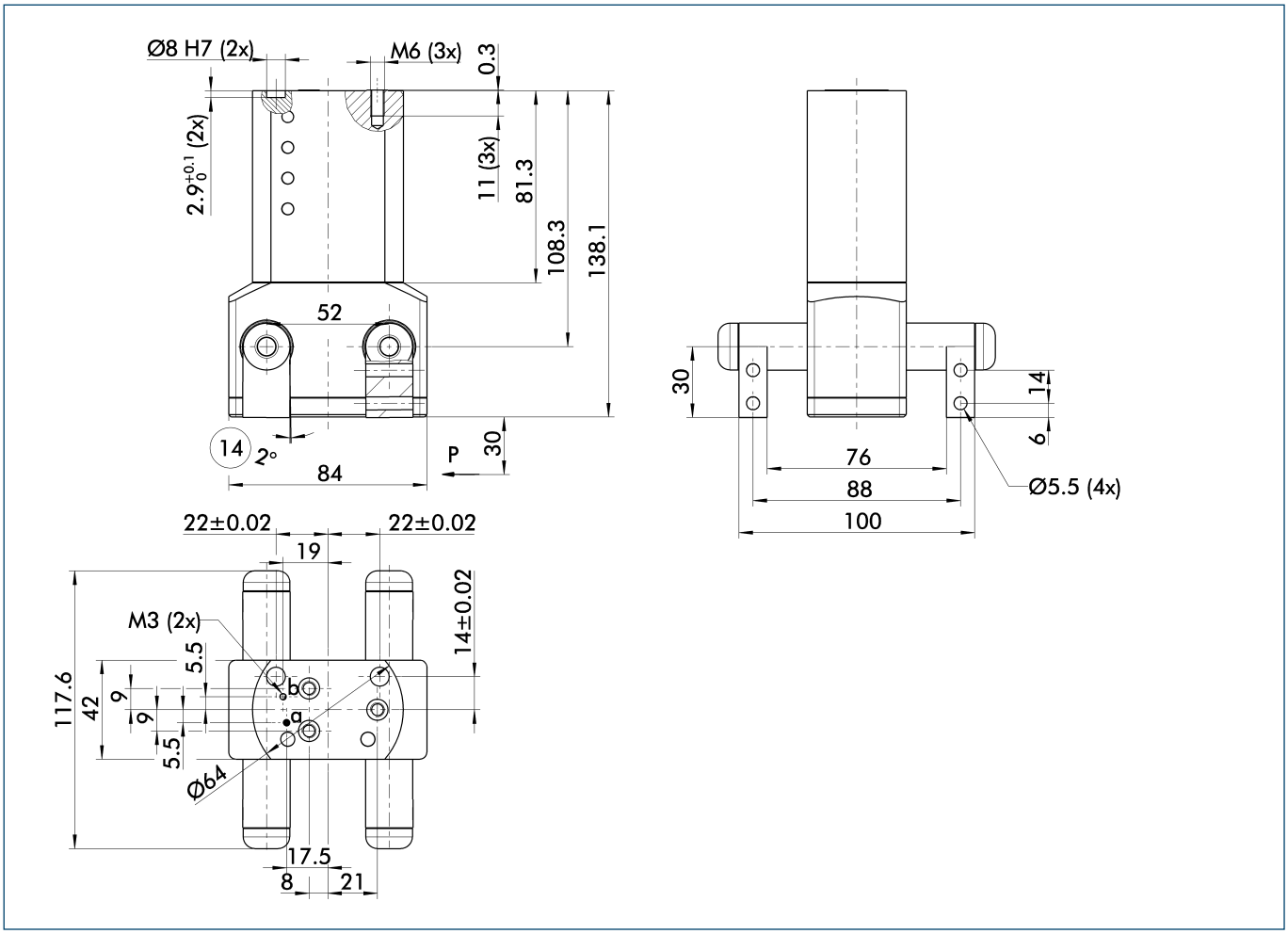


The drawing shows the gripper in the basic version with closed jaws, the dimensions do not include the options described below.

ⓘ The SDV-P pressure maintenance valve can be used as a gripping force maintenance device (see "Accessories" catalog section).

A, a Main/direct connection, gripper opening
B, b Main/direct connection, gripper closing
⑭ Clamping reserve per finger

## Hose-free direct connection

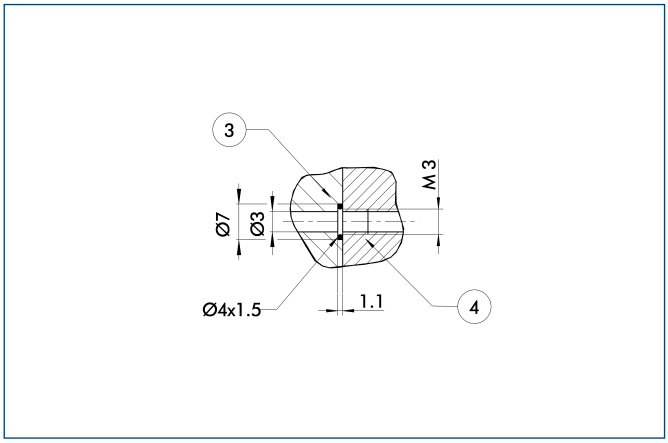


③ Adapter
④ Gripper

The direct connection is used for supplying compressed air without hoses. Instead, the pressure medium is fed through bore-holes in the mounting plate.

## Gripper with position monitoring

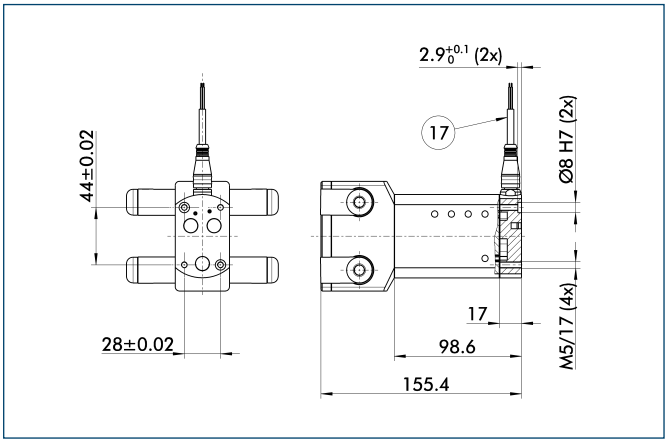


⑰ Cable outlet

Gripper with position monitoring via magnetic sensors

## Special Gripper • O-ring Assembly Gripper

**Size**
85

**Weight**
1.35 kg

**Ring diameter O.D. Assembly**
appr.ø 5 mm ... ø 160 mm

**Ring diameter I.D. Assembly**
appr. ø 10 mm ... ø 120 mm

## Application example

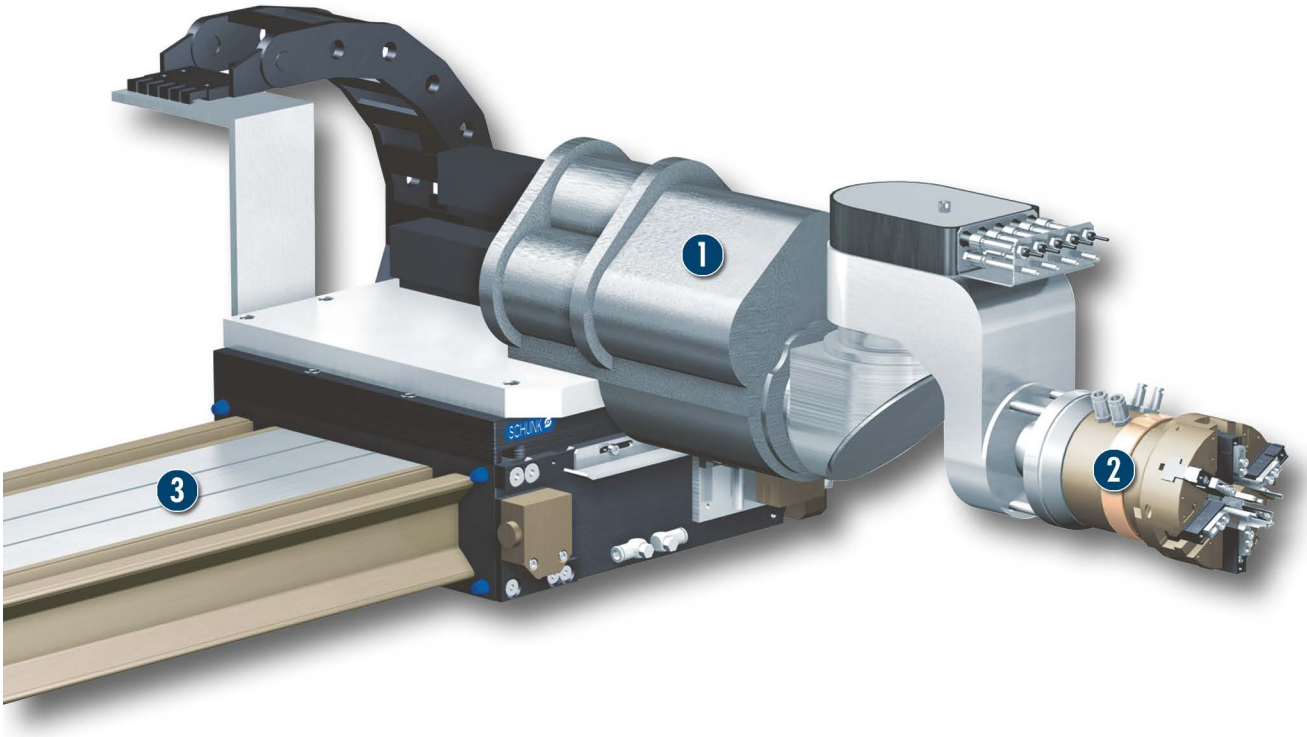


Automatic machine for the internal or external assembly of O-rings with a wide range of diameters

1. CAY 15 Handling Axis
2. ORG 85 O-ring Gripper
3. Linear Axis with Direct Drive MLD 200T

# O-ring Assembly Gripper

Grippers equipped with the corresponding top jaw fingers, can assemble o-rings and mostly square rings or other rings, too, but also shafts (O.D. assembly) as well as bores (I.D. assembly).

## Area of application

The gripper should be used in a clean environment, particularly in automated assembly.




## Your advantages and benefits

**O.D. and I.D. assembly with one gripper**
for flexibility and cost-saving

**“Controlled production” due to a new assembly principle**
for high availability

**Standard assembly finger for O.D. Assembly**
for conventional ring sizes for fast commissioning

## General information on the series

**Working principle**
Two independent finger triples shape the o-ring which will be then assembled.

**Base jaw material**
Steel

**Housing material**
Aluminum

**Actuation**
pneumatic, via filtered compressed air (10 µm): dry, oiled, or not lubrified pressure medium: Requirements on quality of the compressed air according to DIN ISO 8573-1: 6 4 4.

**Warranty**
24 months

**Scope of delivery**
Gripper with assembly- and operating manual, and manufacturer’s declaration

## Sectional diagram

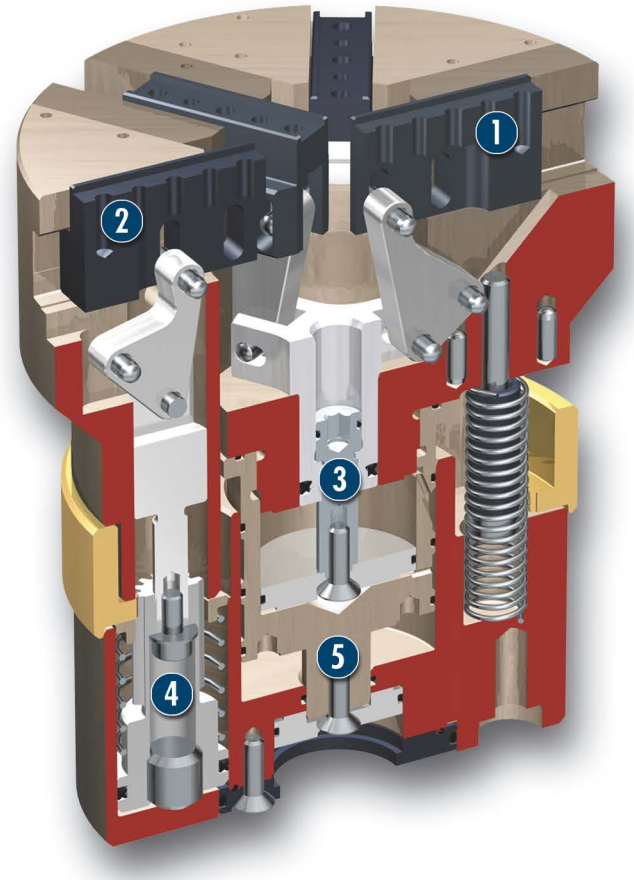


1 **Triple jaw A**
double-acting

2 **Triple jaw B**
single-acting

3 **Drive**
for triple jaw A

4 **Drive**
for triple jaw B

5 **Drive**
for linear stroke

## Function description

**O.D. assembly**
The o-ring is expanded by six fingers, the gripper is moved onto the assembly groove of the shaft. The three fingers of the triple jaw A will be retracted with a linear stroke first. The o-ring is already partially inserted in the groove, due to the triangle shape, which occurs since the three jaws of the triple jaw B are holding the o-ring now. The complete gripper is retracted now. The o-ring retracts into its assembly groove automatically now.

**I.D. assembly**
The segment jaws of triple B and the bar fingers of triple A are positioning the o-ring into the shape of a cloverleaf. The gripper is moved with its fingers into the assembly bore. The segment jaws push the o-ring in a large part of the groove's circumference into the groove. The bar fingers are retracted, the o-ring continous to be inserted in the groove. The bar fingers are inside the o-ring now and the segment jaws push the o-ring imperatively into its groove.

## Options and special information

For conventional o-ring sizes SCHUNK offers standard assembly fingers for O.D. assembly. Assembly fingers for I.D. assembly differentiate according to the o-rings. On request, SCHUNK is offering customized products or which can be manufactured by the customer himself. You will find detailled drawings and engineering instructions in our operating manual.
The pdf files are ready for download under: www.schunk.com.

## Accessories

Accessories from SCHUNK – the suitable complement for the highest level of functionality, reliability and controlled production of all automation components.

### Centering sleeves

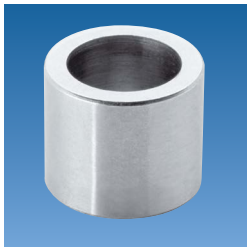

### Fittings



### IN inductive proximity switches



### KV/KA sensor cables



### Assembly finger

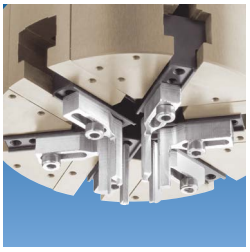



### V sensor distributors



## General information on the series

### Drawings and engineering instructions

For more information on drawings and engineering instructions of assembly fingers, please consult our operating manual for ORG. The pdf-file can be downloaded under www.schunk.com

### Gripping force

is the arithmetic sum of the individual forces occuring at the base jaws at a distance P (see drawing), measured from the upper edge of the gripper.

### Finger length

is measured from the upper edge of the gripper housing in the direction of the main axis.

### Repeat accuracy

is defined as diffusion of the end position after 100 consecutive strokes

## Assembly process I.D. assembly

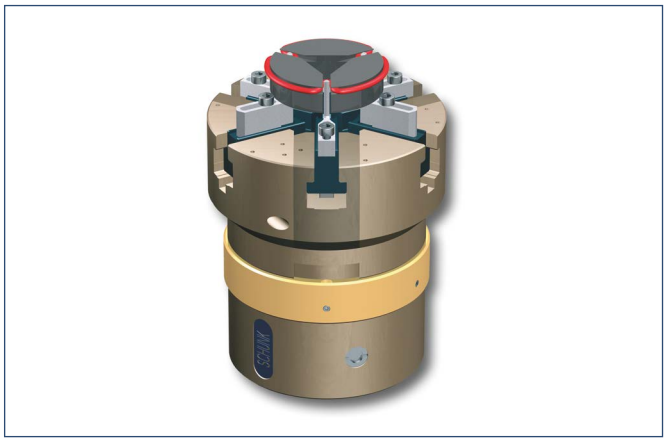

1. Mounting of the o-ring.

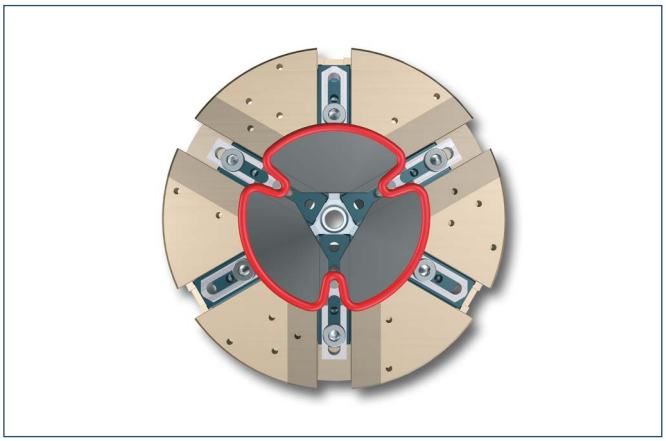

2. Shaping the o-ring into the shape of a cloverleaf.

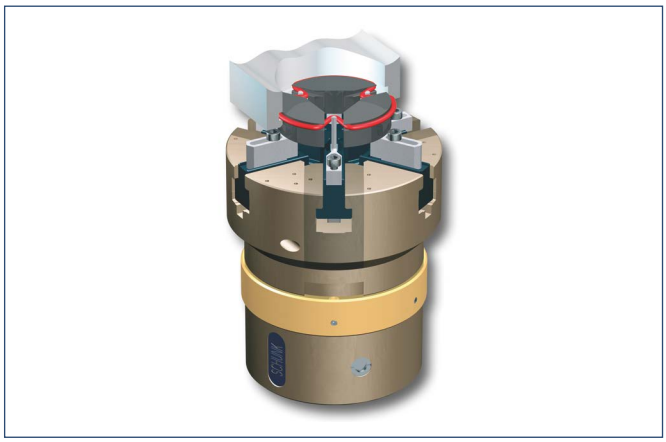

3. Travel into the bore (assembly position) and pressing by triple jaw B.

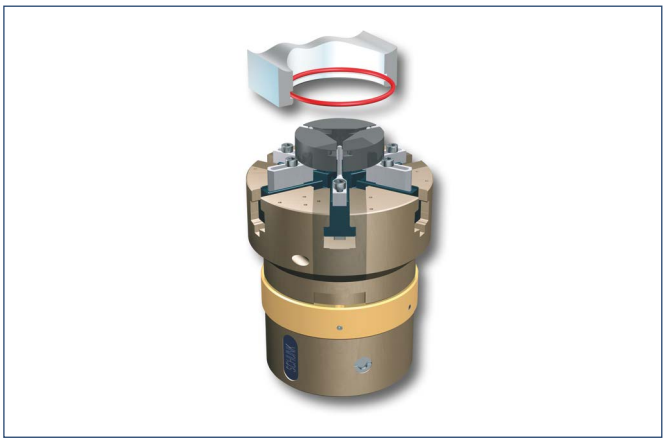

4. Pressing by triple jaw A and retaction of the gripper

## Assembly process O.D. assembly



1. Mounting of the o-ring and expansion to a hexagon.

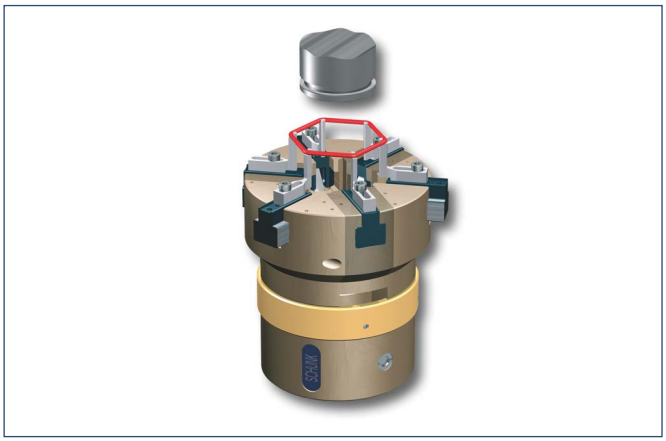

2. Travel to the shaft (assembly position).

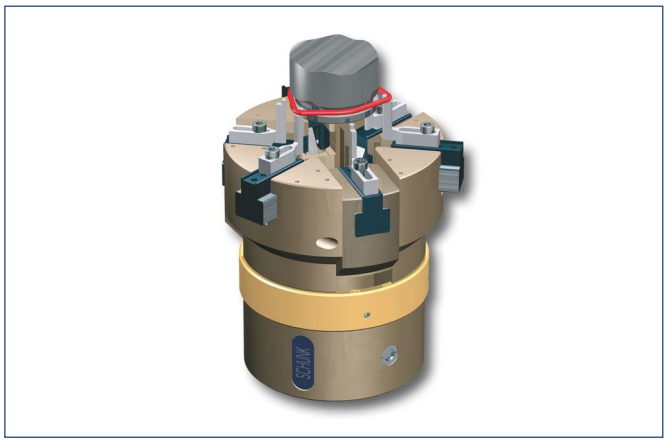

3. Retraction of triple jaw A. The o-ring inserts into the groove.

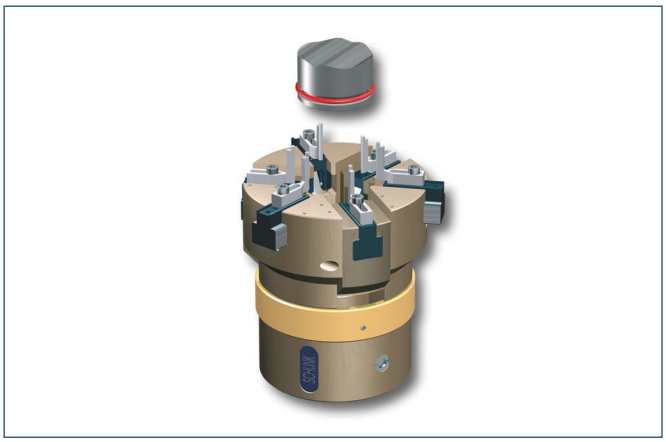

4. Retraction of the whole gripper. The o-ring is completely inserted in the groove now.

# ORG 85

## Special Gripper • O-ring Assembly Gripper



### Finger load

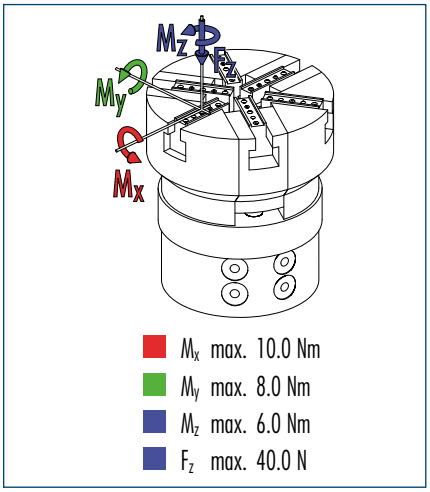


ⓘ Moments and forces apply per base jaw and may occur simultaneously. $M_y$ may arise in addition to the moment generated by the gripping force itself. If the max. permitted finger weight is exceeded, it is imperative to throttle the air pressure so that the jaw movement occurs without any hitting or bouncing. Service life may reduce.

## Technical data

| Description | | ORG 85 |
|---|---|---|
| ID | | 0304120 |
| No. of fingers | | 6 |
| Triple jaw A: Principle of function | | double-acting |
| Triple jaw A: Stroke per finger | [mm] | 21.0 |
| Triple jaw A: Closing force | [N] | 45.0 |
| Triple jaw A: Opening force | [N] | 55.0 |
| Triple jaw A: Drawback stroke | [mm] | 5.0 |
| Triple jaw A: Drawback force | [N] | 20.0 |
| Triple jaw B: Principle of function | | single-acting |
| Triple jaw B: Stroke per finger | [mm] | 15.0 |
| Triple jaw B: Opening force | [N] | 125.0 |
| Weight | [kg] | 1.35 |
| Nominal pressure | [bar] | 6.0 |
| Minimum pressure | [bar] | 4.0 |
| Maximum pressure | [bar] | 8.0 |
| Max. permitted finger length | [mm] | 60.0 |
| IP class | | 40 |
| Min. ambient temperature | [°C] | -10.0 |
| Max. ambient temperature | [°C] | 90.0 |
| Repeat accuracy | [mm] | 0.02 |

ⓘ Principally o-rings can be assembled, depending on the shape (o-ring, square ring, ...), shore hardness, I.D. and string thickness as well as assembly depth. Basically for O.D. assembly o-rings from ø 5 mm to ø 160 mm can be assembled, in case of I.D. assembly o-rings from ø 10 mm to ø 120 mm.
For last control if they are mountable, please contact SCHUNK

## Main views

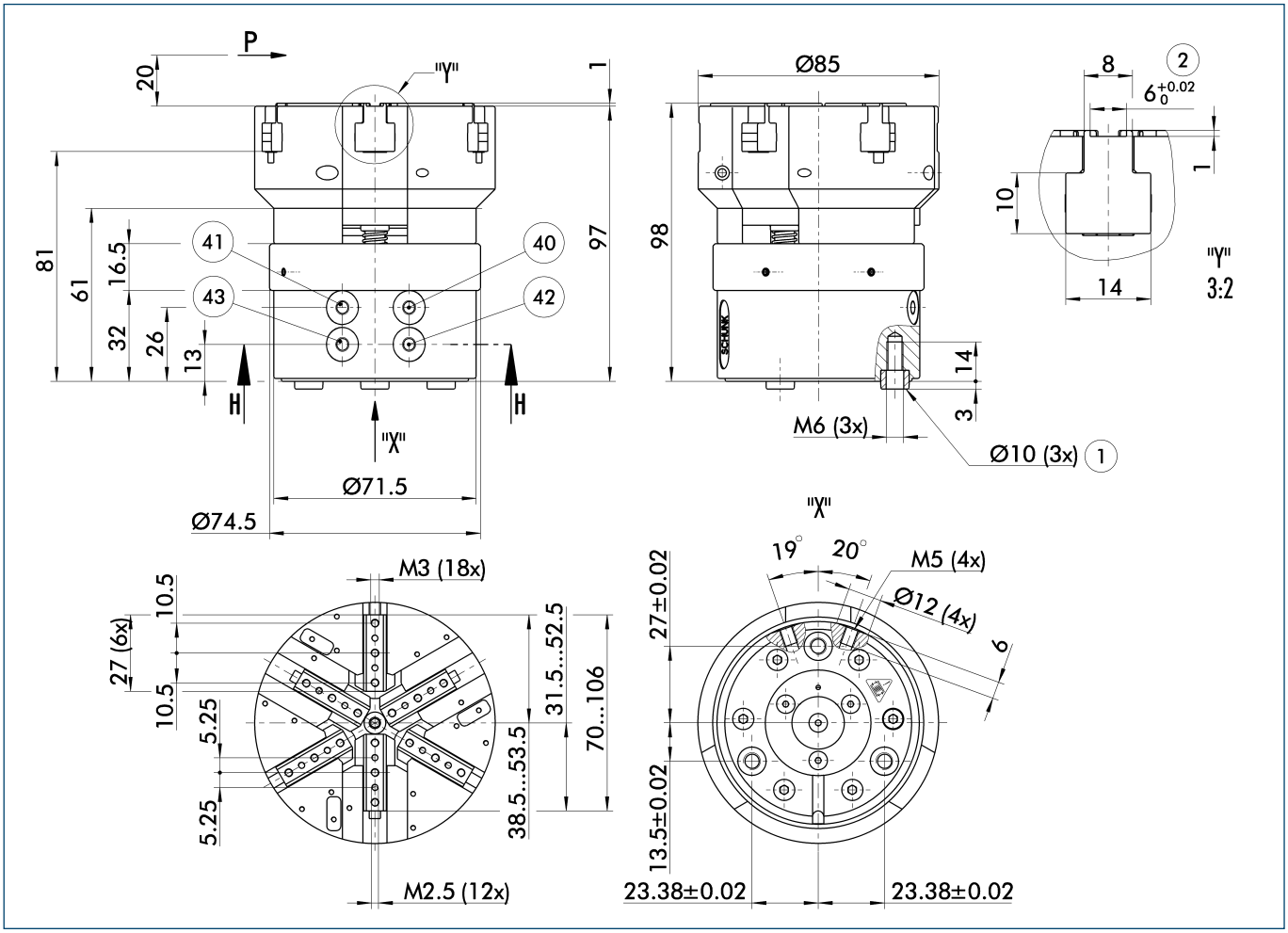


The drawing shows the gripper in the basic version with closed jaws, the dimensions do not include the options described below.

1 Gripper connection
2 Finger connection
40 Connection gripper triple jaw A opens
41 Connection gripper triple jaw A closes
42 Connection gripper triple jaw B opens
43 Connection Z-stroke unit run-in

## Mounting kit for proximity switch

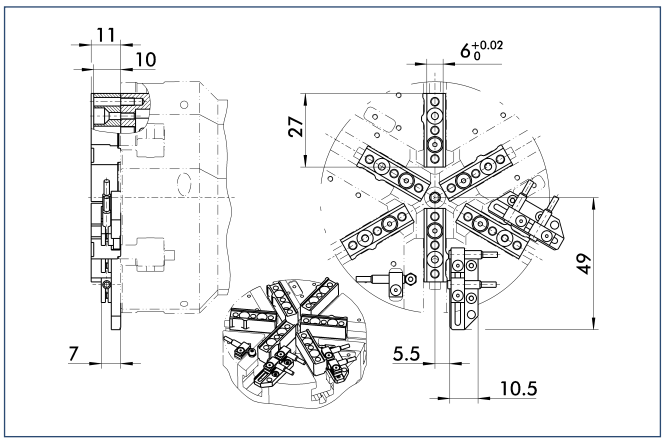

The mounting kit consists of brackets, switch cams and the associated mounting materials. The proximity switches must be ordered separately.

| Description | ID |
|---|---|
| AS-ORG 85 | 0304129 |

## Concept for I.D. assembly

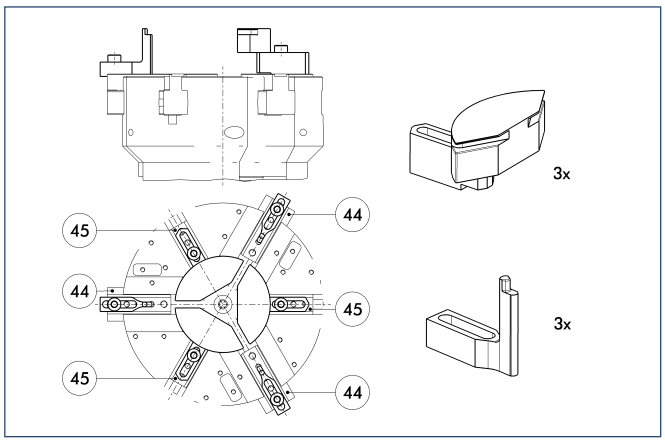


44 Triple jaw A
45 Triple jaw B

For I.D. assembly three finger shapes and three bar fingers are required. Its geometry depends on the dimensions of the rings to be assembled. Engineering instructions are shown in the operating manual which can be downloaded under ORG. SCHUNK offers engineering works and manufacturing on request.

## O.D. assembly: Assembly finger 0.5 ... 1.0

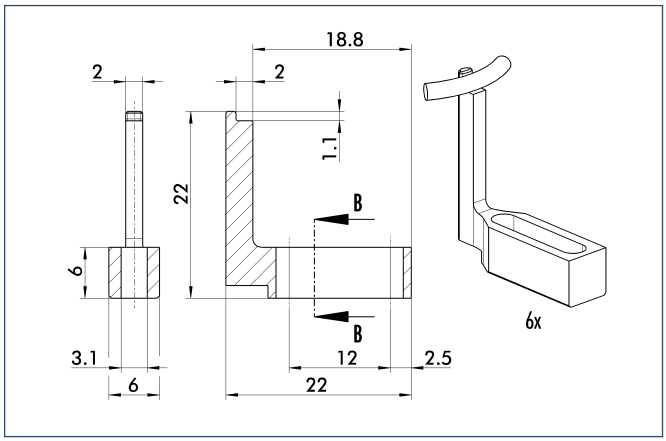


Standard finger for O.D. assembly of rings with a string thickness from 0.5 mm to 1 mm.

| Description | Material | Scope of delivery | ID |
|---|---|---|---|
| MFA-D2-0.5-1.0-ORG 85 | Aluminum | 1 | **0304113** |

ⓘ Six fingers are required.

## O.D. assembly: Assembly finger 1.0 ... 2.0

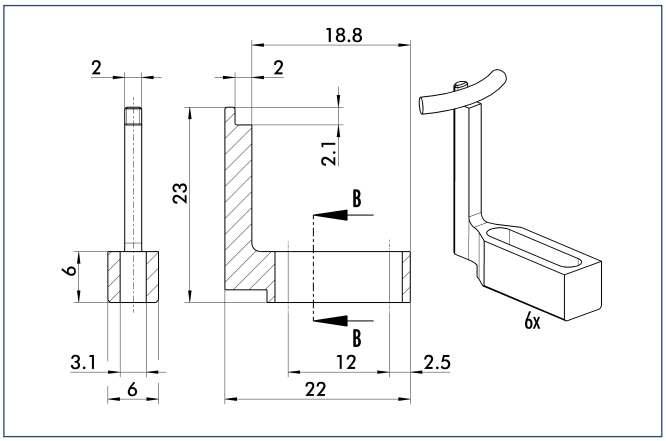


Standard finger for O.D. assembly of rings with a string thickness from 1.0 mm to 2.0 mm.

| Description | Material | Scope of delivery | ID |
|---|---|---|---|
| MFA-D2-1.0-2.0-ORG 85 | Aluminum | 1 | **0304114** |

ⓘ Six fingers are required.

## O.D. assembly: Assembly finger 2.0 ... 3.0

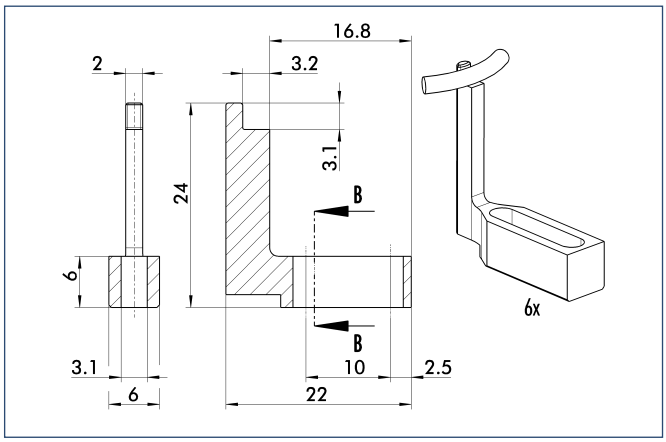


Standard finger for O.D. assembly of rings with a string thickness from 2.0 to 3.0 mm.

| Description | Material | Scope of delivery | ID |
|---|---|---|---|
| MFA-D2-2.0-3.0-ORG 85 | Aluminum | 1 | **0304115** |

ⓘ Six fingers are required.

## O.D. assembly: Assembly finger 3.0 ... 4.0

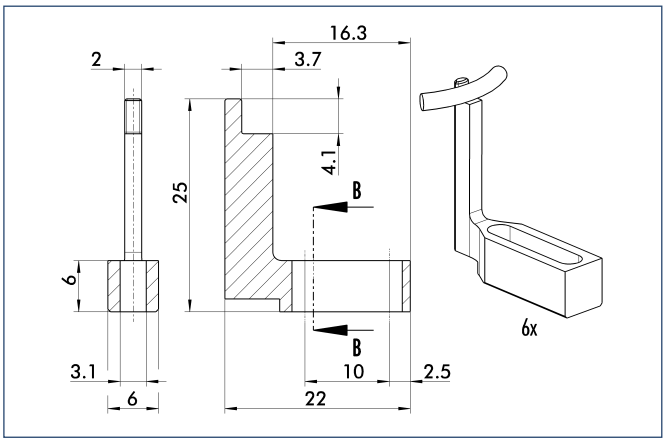


Standard finger for O.D. assembly of rings with a string thickness from 3.0 mm to 4.0 mm.

| Description | Material | Scope of delivery | ID |
|---|---|---|---|
| MFA-D2-3.0-4.0-ORG 85 | Aluminum | 1 | **0304116** |

ⓘ Six fingers are required.

You can find more detailed information and individual parts of the above-mentioned accessories in the “Accessories” catalog section.

## Sensor system

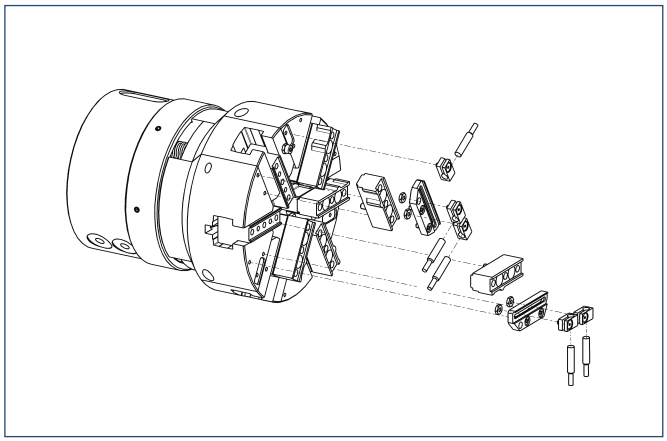

End position monitoring:
Inductive proximity switches, mounted with mounting kit

| Description | ID |
|---|---|
| IN 3-S-M8-PNP | 0301466 |

ⓘ Per gripper five sensors (closers/S) are required as well as optonally an extention cable.

Extension cables for proximity switches/magnetic switches

| Description | ID |
|---|---|
| GK 3-M8-PNP | 0301622 |
| KV 10-M8-PNP | 0301496 |
| KV 20-M8-PNP | 0301497 |
| KV 3-M8-PNP | 0301495 |
| WK 3-M8-PNP | 0301594 |
| WK 5-M8-PNP | 0301502 |

ⓘ Please note the minimum permitted bending radii for the sensor cables, which are generally 35 mm.

S

You can find more detailed information and individual parts of the above-mentioned accessories in the “Accessories” catalog section.

# GSW-B

## Special Gripper • Gripper with shaft interface

**Sizes**
50 ... 100

**Weight**
0.17 kg ... 1.4 kg

**Gripping force**
140 N ... 5900 N

**Stroke per finger**
2 mm ... 10 mm

**Workpiece weight**
0.7 kg ... 20 kg

## Application example

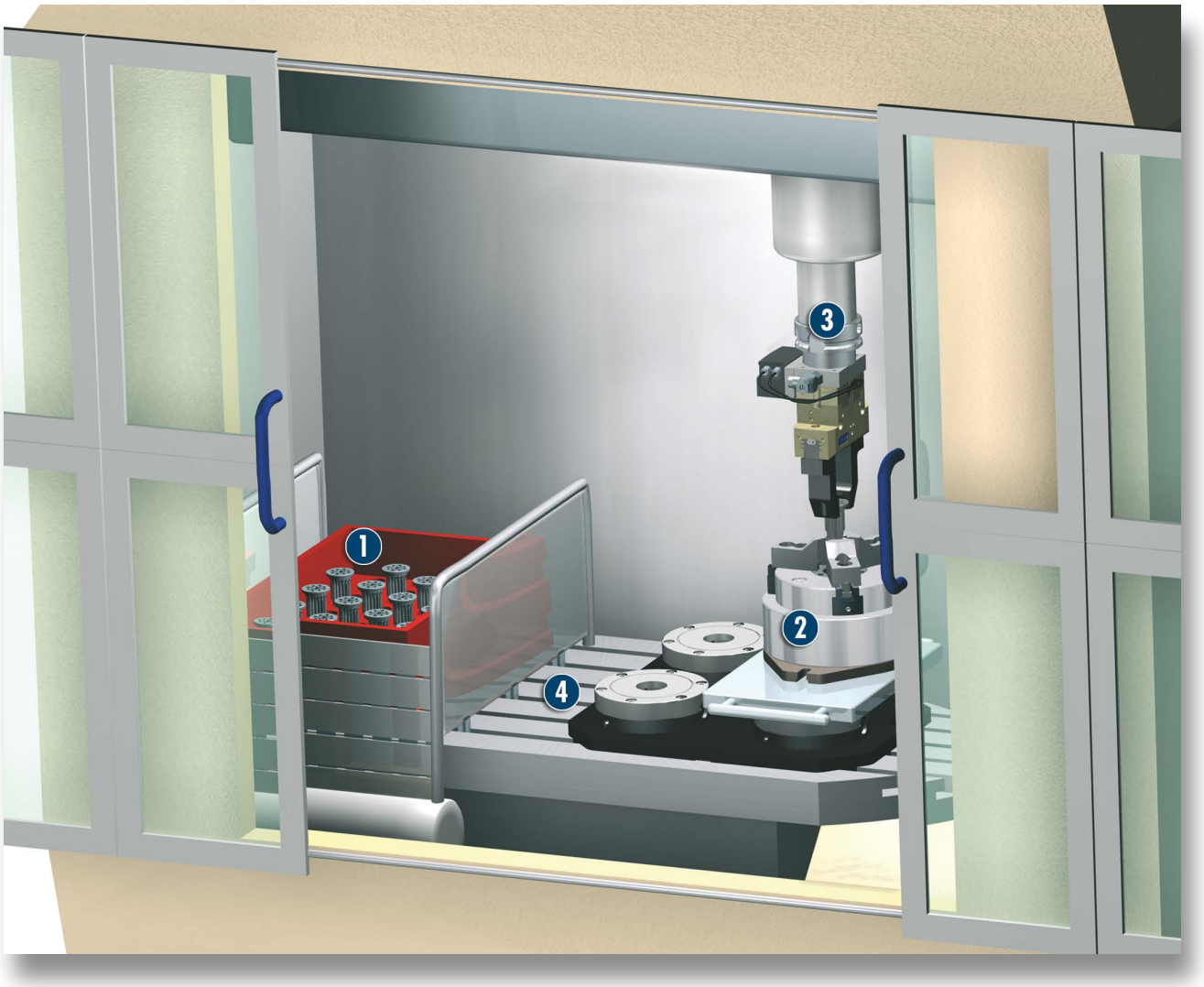


**Exemplary application flow and machining:**

1. The raw part is taken out of the rack with a gripper, and is delivered to a clamping station - the part will be clamped then
2. Exchange of tools and machining
3. Exchange of the gripper
4. Depositing the ready-machined part into the rack, the cycle is restarted from the beginning

1 **Workpiece rack**

2 **Clamping device**

3 **Gripper with spindle interface PGN-plus at GSW-B**

4 **Machine table**

## Gripper with shaft interface

universal gripper PGN-plus/PZN-plus with shaft interface GSW-B

## Field of application

unit for automatic loading and unloading of machining centers by their own axis

## Your advantages and benefits

**Low-price module**
from a universal gripper PGN-/PZN-plus and a shank interface

**Fast, automated gripper changeover**
from the gripper to the storage rack

**Fully automated workpiece changeover**
without robot- or gantry system




## General note to the series

**Principle of function**
Pressure distributor and wedge-hook kinematics

**Housing material**
Aluminum alloy, hard-anodized

**Base jaw material**
Blackened steel

**Actuation**
hydraulically by internal coolant supply (filtered, maximum particle size 30 microns) or pneumatically, via filtered compressed air (10 microns): dry, lubrified or non-lubrified pressure medium: Requirement to the compressed air quality as per DIN ISO 8573-1: 6 4 4

**Warranty**
24 months (details, general terms and conditions and operation manuals can be downloaded under www.schunk.com)

**Scope of delivery**
Centering elements, assembly and operating instruction

## Sectional diagram

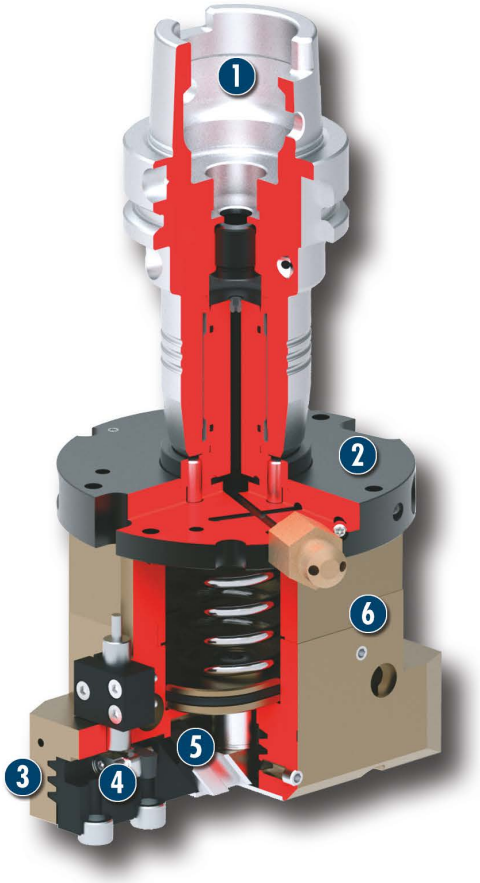


**1 Mount**
for automatic tool/gripper changeover in the spindle

**2 Adapter plate with integrated pressure distributor**
for a large pressure range

**3 Multiple-tooth guidance**
high-loadable base jaw guidance with minimum play for long fingers

**4 Base jaw**
for the connection of workpiece-specific gripper fingers

**5 Wedge-hook design**
for high power transmission and centric gripping

**6 Housing**
weight-optimized through application of hard-anodized, high-strength aluminum alloy

## Functional description

The pressure produced by the central internal supply of coolant is reduced by the pressure distributor, which is integrated in the adapter plates. The gripper can then be subjected to pressure, and can allow the base jaws to grip via the piston and wedge hook.
During the gripping operation the gripper continuously supplies coolant or compressed air by the lateral pressure control valve.

## Options and special information

Please note that applications under extreme conditions (e.g. coolant, casting or abrasive dust) will reduce the service lifetime of this product considerably.
Further shaft diameters on request.
Please note that connection A of grippers in IS-version should not be sealed air-tight. The same applies for connection B of grippers in AS-version.

### Precondition

If the spindles do not rotate, then machines have to provide compressed air or coolant.

## Accessories

Accessories from SCHUNK – the suitable supplement for maximum functionality, reliability and performance of all automation modules.

### Centering sleeves



### Protection cover



### Quick-change Jaw System



### Finger blanks



### Reed Switches for C-Nut





### Radio sensor system RSS



### Cylindrical Reed Switches



### Universal intermediate jaw



### Cleaning Unit



### Vacuum Gripper



### Toolholder



ⓘ For the exact size of the required accessories, availability of this size and the designation and ID, please refer to the additional views at the end of the size in question. You will find more detailed information on our accessory range in the “Accessories” catalog section.

## General note to the series

**Gripping force**
is the arithmetic total of the gripping force applied to each finger at distance P (see illustration) measured from the upper edge of the gripper.

**Finger length**
The finger length is measured from the upper edge of the gripper housing in the direction of the main axis.

**Repeat accuracy**
is defined as the spread of the limit position after 100 consecutive strokes.

**Closing and opening times**
The indicated times depend on the flow rate and pressure of the drive medium and the therefrom resulting electrical resistances.

**Closing and opening forces**
The indicated forces are mentioned for each nominal operating pressure of the drive medium. Details are indicated as force areas, since the forces depend on the gripper stroke.

# GSW-B with 2-Finger Parallel Gripper

**Special Gripper** • **Gripper with shaft interface**





## Finger load

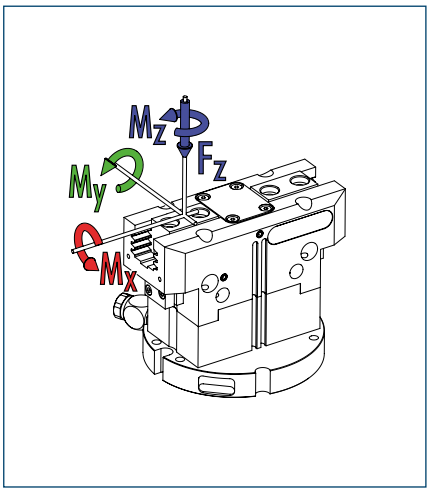


ⓘ The indicated moments and forces are static values, apply per base jaw and may occur simultaneously. $M_y$ may arise in addition to the moment generated by the gripping force itself. If the max. permitted finger weight is exceeded, it is imperative to throttle the air pressure so that the jaw movement occurs without any hitting or bouncing. Service life may be reduced.

## Technical data

| Despriction | | GSW-B 50-P | GSW-B 64-PZ | GSW-B 80-PZ | GSW-B 100-PZ |
|---|---|---|---|---|---|
| **ID** | | **0308420** | **0308422** | **0308423** | **0308424** |
| Weight | [kg] | 0.2 | 0.23 | 0.31 | 0.42 |
| Min./max. ambient temperature | [°C] | -10/90 | -10/90 | -10/90 | -10/90 |
| Max. permitted speed | [1/min] | 20 | 20 | 20 | 20 |
| Nominal operating pressure compressed air | [bar] | 6 | 6 | 6 | 6 |
| Min./max. operating pressure compressed air | [bar] | 4/8 | 4/8 | 4/8 | 4/8 |
| Nominal operating pressure coolant | [bar] | 40 | 40 | 40 | 40 |
| Min./max. operating pressure coolant | [bar] | 20/50 | 20/50 | 20/50 | 20/50 |
| Max. moments $M_x/M_y/M_z$ | [Nm] | 20/25/10 | 40/60/40 | 60/95/55 | 80/115/70 |
| Max. force $F_z$ | [N] | 500 | 1100 | 1500 | 2000 |
| **Grippers and their characteristics** | | | | | |
| **Gripping pinciple** | | **O.D. gripping** | **O.D. gripping** | **O.D. gripping** | **O.D. gripping** |
| Description | | **PGN-plus 50-1-IS** | **PGN-plus 64-1-IS** | **PGN-plus 80-1-IS** | **PGN-plus 100-1-IS** |
| ID | | **0371459** | **0371094** | **0371461** | **0371462** |
| Stroke per finger | [mm] | 4 | 6 | 8 | 10 |
| Closing force/opening force | [N] | 120 - 145/45 - 70 | 225 - 270/90 - 135 | 385 - 465/155 - 235 | 585 - 725/240 - 380 |
| Max. permitted finger length | [mm] | 64 | 85 | 105 | 135 |
| Description | | **PGN-plus 50-2-IS** | **PGN-plus 64-2-IS** | **PGN-plus 80-2-IS** | **PGN-plus 100-2-IS** |
| ID | | **0371469** | **0371095** | **0371471** | **0371472** |
| Stroke per finger | [mm] | 2 | 3 | 4 | 5 |
| Closing force/opening force | [N] | 255 - 310/95 - 150 | 475 - 565/190 - 280 | 790 - 960/320 - 490 | 1360 - 1500/240 - 380 |
| Max. permitted finger length | [mm] | 64 | 80 | 100 | 125 |
| **Gripping pinciple** | | **I.D. gripping** | **I.D. gripping** | **I.D. gripping** | **I.D. gripping** |
| Description | | **PGN-plus 50-1-AS** | **PGN-plus 64-1-AS** | **PGN-plus 80-1-AS** | **PGN-plus 100-1-AS** |
| ID | | **0371399** | **0371092** | **0371401** | **0371402** |
| Stroke per finger | [mm] | 4 | 6 | 8 | 10 |
| Closing force/opening force | [N] | 45 - 70/115 - 140 | 90 - 135/205 - 250 | 155 - 235/335 - 415 | 240 - 380/520 - 660 |
| Max. permitted finger length | [mm] | 68 | 85 | 105 | 135 |
| Description | | **PGN-plus 50-2-AS** | **PGN-plus 64-2-AS** | **PGN-plus 80-2-AS** | **PGN-plus 100-2-AS** |
| ID | | **0371449** | **0371093** | **0371451** | **0371452** |
| Stroke per finger | [mm] | 2 | 3 | 4 | 5 |
| Closing force/opening force | [N] | 95 - 150/235 - 290 | 190 - 280/430 - 520 | 320 - 490/690 - 860 | 500 - 790/1080 - 1370 |
| Max. permitted finger length | [mm] | 68 | 80 | 100 | 125 |

ⓘ The grippers have to be ordered separately.

ⓘ The grippers named "IS" are used for O.D. gripping; grippers named "AS" are used for I.D. gripping. By media pressure the gripper of the IS-version is closed; the one of the AS-version is opened via the media pressure. Alternatively it can be gripped with spring force and the media pressure can be loosened.

## GSW-B with PGN-plus 50

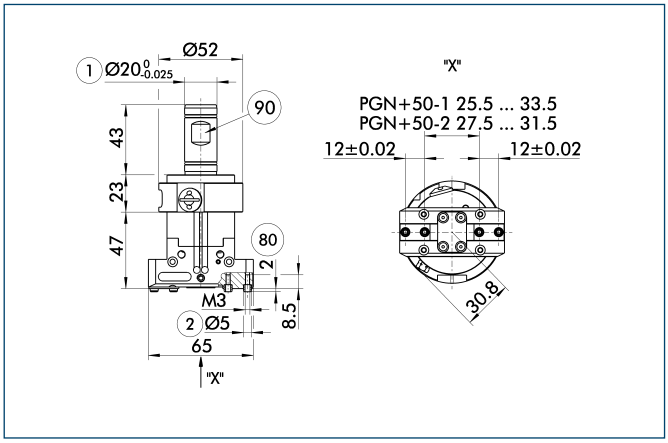


① Gripper connection
② Finger connection
80 Depth of the centering sleeve hole in the matching part
90 Weldon clamping surface

ⓘ Please refer to the gripper in question for more detailed information. Suitable gripper accessories can be found in the additional views at the end of the gripper size in question.

## GSW-B with PGN-plus 64

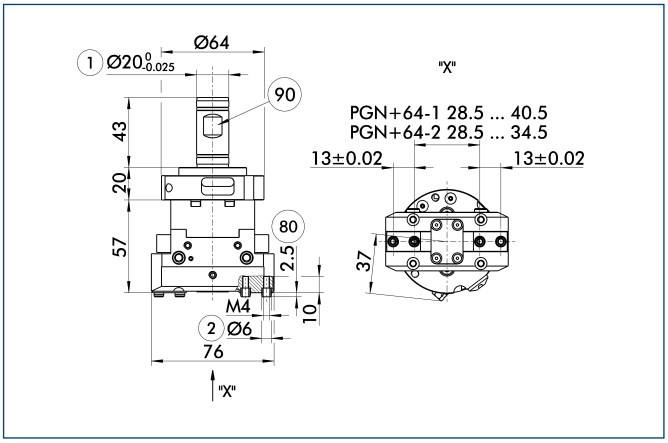


① Gripper connection
② Finger connection
80 Depth of the centering sleeve hole in the matching part
90 Weldon clamping surface

ⓘ Please refer to the gripper in question for more detailed information. Suitable gripper accessories can be found in the additional views at the end of the gripper size in question.

## GSW-B with PGN-plus 80

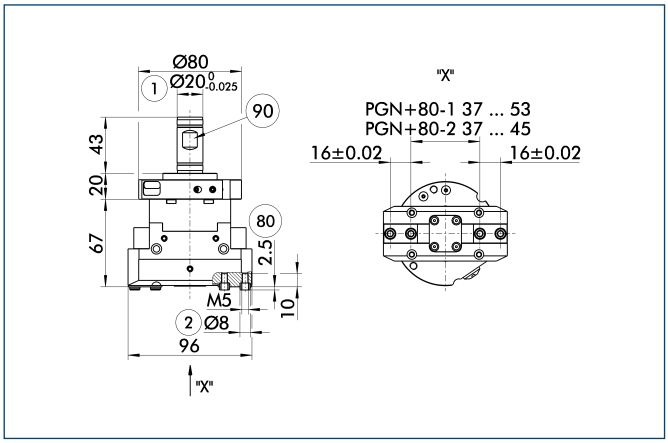


① Gripper connection
② Finger connection
80 Depth of the centering sleeve hole in the matching part
90 Weldon clamping surface

ⓘ Please refer to the gripper in question for more detailed information. Suitable gripper accessories can be found in the additional views at the end of the gripper size in question.

## GSW-B with PGN-plus 100

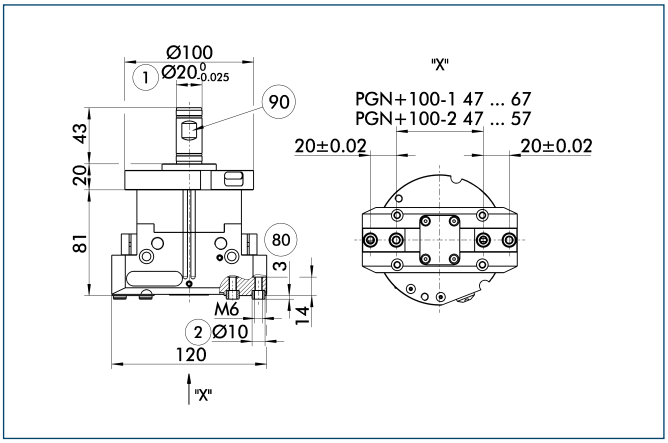


① Gripper connection
② Finger connection
80 Depth of the centering sleeve hole in the matching part
90 Weldon clamping surface

ⓘ Please refer to the gripper in question for more detailed information. Suitable gripper accessories can be found in the additional views at the end of the gripper size in question.

# GSW-B with 2-Finger Parallel Gripper



## Mounting kit for RSS

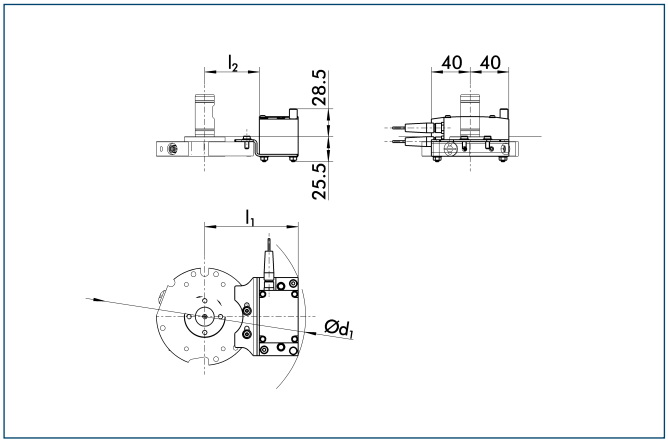


RSS mounted with mounting kit

| Description | ID | $l_1$ | $l_2$ | $d_1$ |
|---|---|---|---|---|
| Mounting kit for RSS | | | | |
| AS-RSS-GSW-H | **0308440** | | | |
| GSW-B 64-PZ | | 79 mm | 38 mm | Ø 177 mm |
| GSW-B 80-PZ | | 87 mm | 46 mm | Ø 191 mm |
| GSW-B 100-PZ | | 97 mm | 56 mm | Ø 210 mm |

The transmitter RSS-T2 can be assembled with the mentioned attachment kit.

## Reed Switches – RSS – Mounting kits

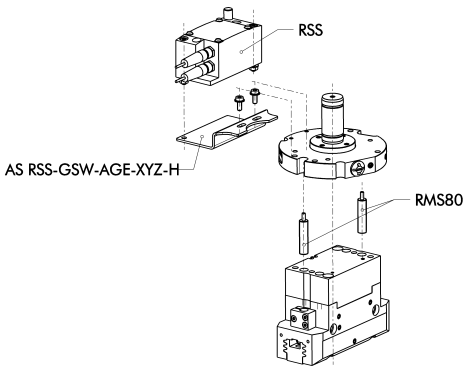


End position monitoring mounted with mounting kit

| Description | ID |
|---|---|
| Mounting kit for RSS | |
| AS-RSS-GSW-H | **0308440** |
| Radio system RSS | |
| RSS-T2 | **0377710** |
| RSS-R1 | **0377700** |
| RSS-R-A | **0377730** |
| Mounting kit for Reed Switches | |
| AS-RMS 80 PGN/PZN-plus 64/80 | **0377725** |
| AS-RMS 80 PGN/PZN-plus 100/125 | **0377726** |
| Reed Switches | |
| RMS 22-S-M8 | **0377720** |
| RMS 80-S-M8 | **0377721** |

The radio system consists of a transmitter RSS-T2, the receiver RSS-R1 and the antenna RSS-R-A.
For cylindrical reed switches RMS 80 the mentioned attachment kits are required, and can be directly assembled into the sensor's C-slot of the grippers. In case of gripper size 50 standard monitoring is not possible. For size 64 just via reed switch RMS 80 is necessary.

- ⓘ Two sensors (Closer/S) are required for each gripper, plus extension cables as an option.
- ⓘ The mounting kit needs to be ordered optionally as an accessory.
- ⓘ Please note the minimum permitted bending radii for the sensor cables, which are generally 35 mm.

## Maximum permitted finger offset

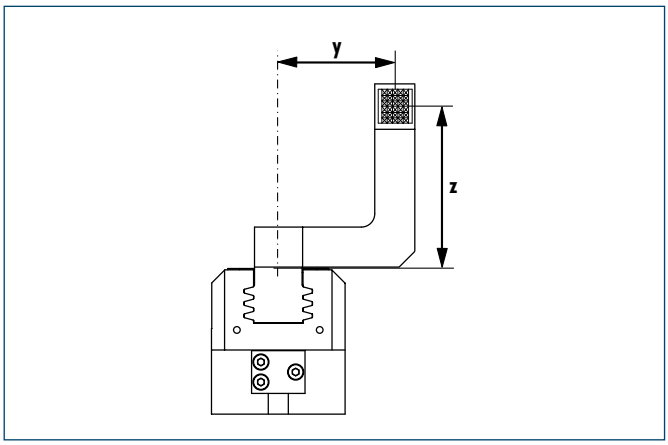


## PGN-plus 50

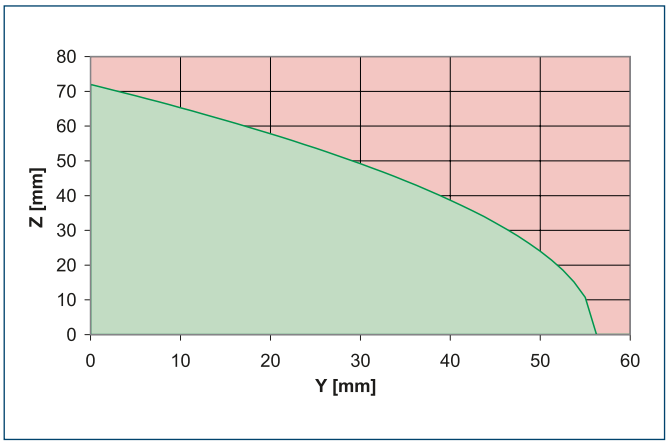


Permitted range
Non-permissible range

The curve applies to the basic version (stroke -1). For other versions, the curve will be parallel but offset in line with the max. permitted finger length.

## PGN-plus 64

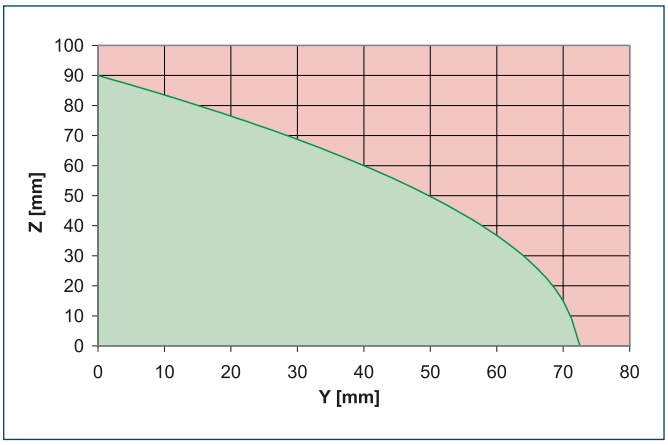


Permitted range
Non-permissible range

The curve applies to the basic version (stroke -1). For other versions, the curve will be parallel but offset in line with the max. permitted finger length.

## Maximum permitted finger offset

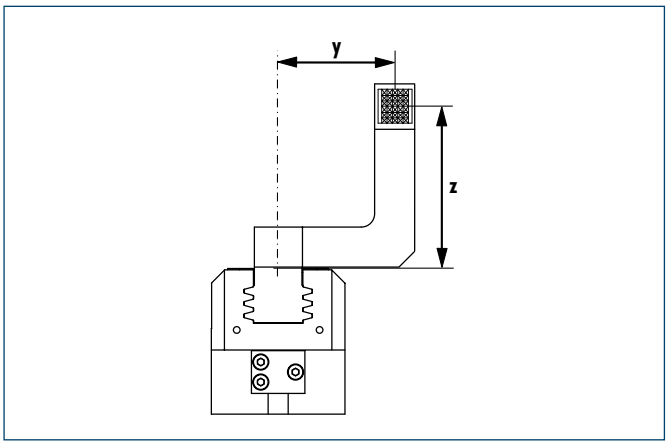


## PGN-plus 80

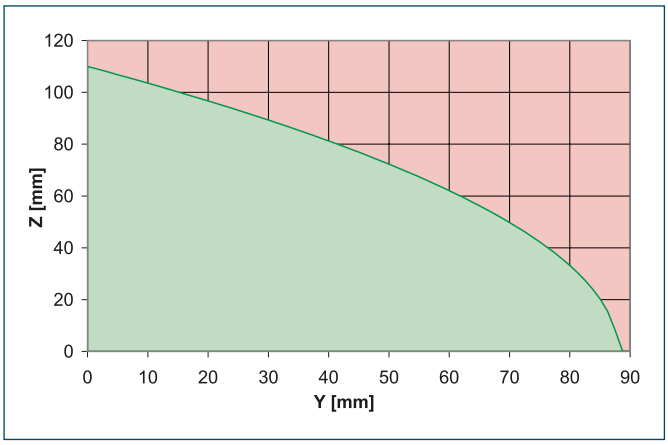


Permitted range
Non-permissible range

The curve applies to the basic version (stroke -1). For other versions, the curve will be parallel but offset in line with the max. permitted finger length.

## PGN-plus 100

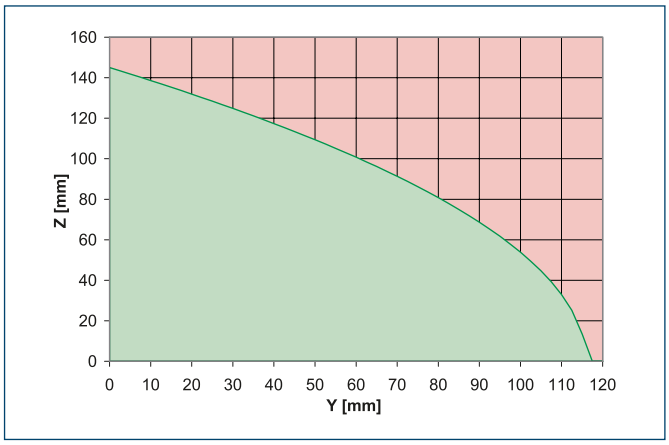


Permitted range
Non-permissible range

The curve applies to the basic version (stroke -1). For other versions, the curve will be parallel but offset in line with the max. permitted finger length.

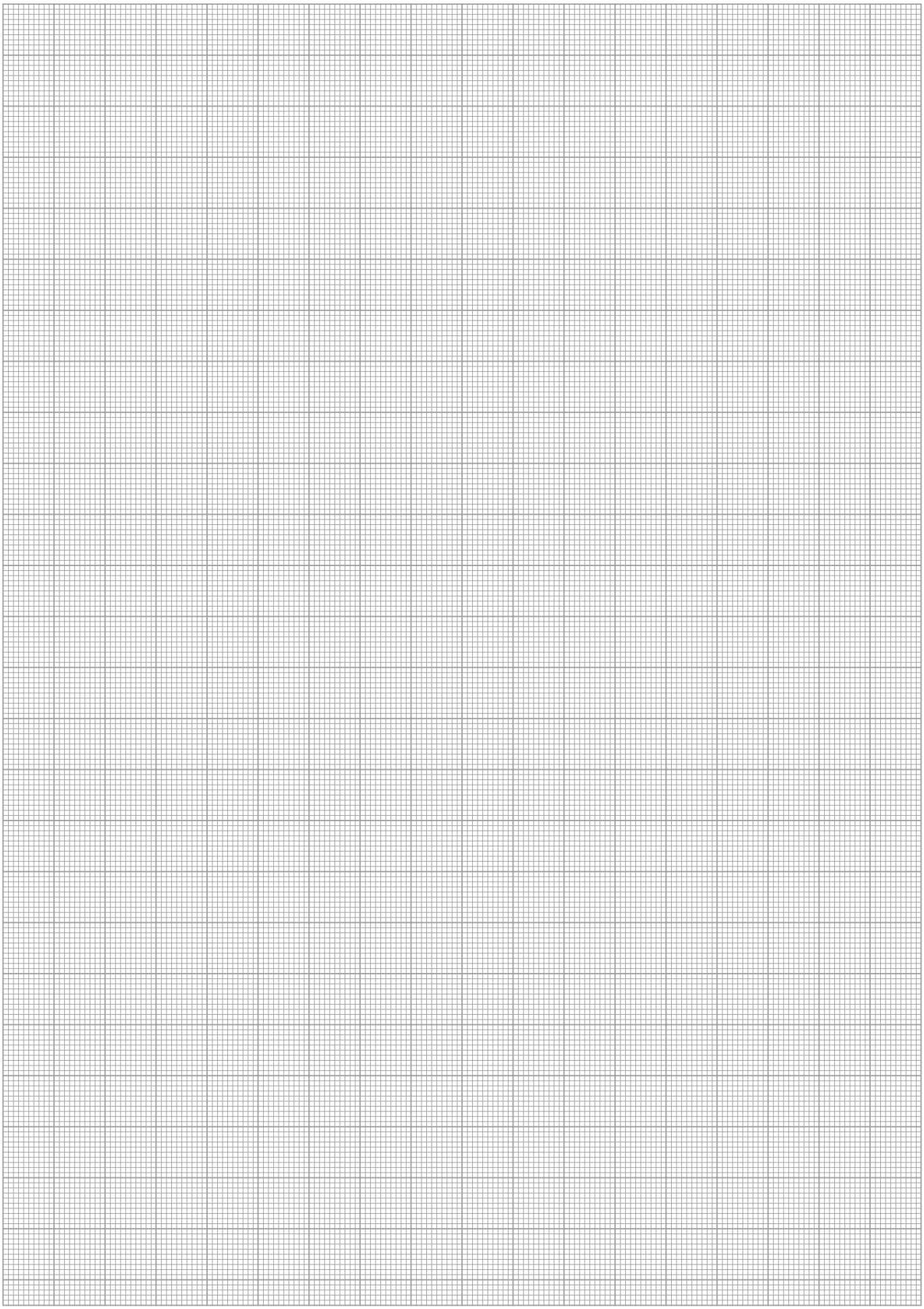

# GSW-B with 3-Finger Centric Gripper

**Special Gripper** • **Gripper with shaft interface**





## Finger load

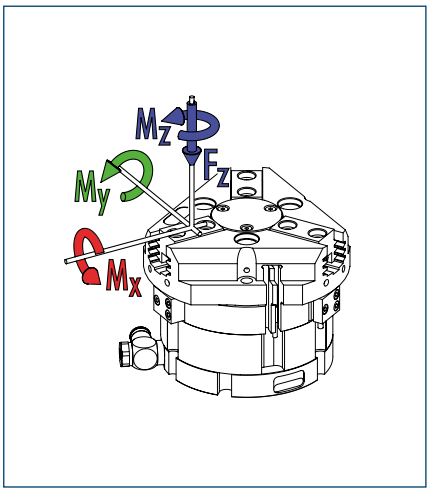


ⓘ The indicated moments and forces are static values, apply per base jaw and may occur simultaneously. $M_y$ may arise in addition to the moment generated by the gripping force itself. If the max. permitted finger weight is exceeded, it is imperative to throttle the air pressure so that the jaw movement occurs without any hitting or bouncing. Service life may be reduced.

## Technical data

| Description | | GSW-B 50-Z | GSW-B 64-PZ | GSW-B 80-PZ | GSW-B 100-PZ |
|---|---|---|---|---|---|
| **ID** | | **0308421** | **0308422** | **0308423** | **0308424** |
| Weight | [kg] | 0.2 | 0.23 | 0.31 | 0.42 |
| Min./max. ambient temperature | [°C] | -10/90 | -10/90 | -10/90 | -10/90 |
| Max. permitted speed | [1/min] | 20 | 20 | 20 | 20 |
| Nominal operating pressure compressed air | [bar] | 6 | 6 | 6 | 6 |
| Min./max. operating pressure compressed air | [bar] | 4/8 | 4/8 | 4/8 | 4/8 |
| Nominal operating pressure coolant | [bar] | 40 | 40 | 40 | 40 |
| Min./max. operating pressure coolant | [bar] | 20/50 | 20/50 | 20/50 | 20/50 |
| Max. moments $M_x/M_y/M_z$ | [Nm] | 20/25/10 | 40/60/40 | 60/95/55 | 80/115/70 |
| Max. force $F_z$ | [N] | 500 | 1100 | 1500 | 2000 |
| **Grippers and their characteristics** | | | | | |
| **Gripping pinciple** | | **O.D. gripping** | **O.D. gripping** | **O.D. gripping** | **O.D. gripping** |
| Description | | **PZN-plus 50-1-IS** | **PZN-plus 64-1-IS** | **PZN-plus 80-1-IS** | **PZN-plus 100-1-IS** |
| ID | | **0303539** | **0303540** | **0303541** | **0303542** |
| Stroke per finger | [mm] | 4 | 6 | 8 | 10 |
| Closing force/opening force | [N] | 340 - 355/150 - 165 | 585 - 640/220 - 275 | 910 - 1080/370 - 540 | 1610 - 1920/780 - 1090 |
| Max. permitted finger length | [mm] | 64 | 85 | 105 | 135 |
| Description | | **PZN-plus 50-2-IS** | **PZN-plus 64-2-IS** | **PZN-plus 80-2-IS** | **PZN-plus 100-2-IS** |
| ID | | **0303639** | **0303640** | **0303641** | **0303642** |
| Stroke per finger | [mm] | 2 | 3 | 4 | 5 |
| Closing force/opening force | [N] | 705 - 740/310 - 345 | 900 - 1075/460 - 635 | 2150 - 2490/760 - 1100 | 3640 - 4280/1620 - 2260 |
| Max. permitted finger length | [mm] | 64 | 80 | 100 | 125 |
| **Gripping pinciple** | | **I.D. gripping** | **I.D. gripping** | **I.D. gripping** | **I.D. gripping** |
| Description | | **PZN-plus 50-1-AS** | **PZN-plus 64-1-AS** | **PZN-plus 80-1-AS** | **PZN-plus 100-1-AS** |
| ID | | **0303509** | **0303510** | **0303511** | **0303512** |
| Stroke per finger | [mm] | 4 | 6 | 8 | 10 |
| Closing force/opening force | [N] | 120 - 190/255 - 325 | 185 - 280/485 - 580 | 350 - 525/825 - 1000 | 720 - 1070/1450 - 1800 |
| Max. permitted finger length | [mm] | 68 | 85 | 105 | 135 |
| Description | | **PZN-plus 50-2-AS** | **PZN-plus 64-2-AS** | **PZN-plus 80-2-AS** | **PZN-plus 100-2-AS** |
| ID | | **0303609** | **0303610** | **0303611** | **0303612** |
| Stroke per finger | [mm] | 2 | 3 | 4 | 5 |
| Closing force/opening force | [N] | 245 - 400/525 - 680 | 315 - 580/705 - 970 | 730 - 1100/1930 - 2300 | 1500 - 2210/3290 - 4000 |
| Max. permitted finger length | [mm] | 68 | 80 | 100 | 125 |

ⓘ The grippers have to be ordered separately.

ⓘ The grippers named "IS" are used for O.D. gripping; grippers named "AS" are used for I.D. gripping. By media pressure the gripper of the IS-version is closed; the one of the AS-version is opened via the media pressure. Alternatively it can be gripped with spring force and the media pressure can be loosened.

## GSW-B with PZN-plus 50

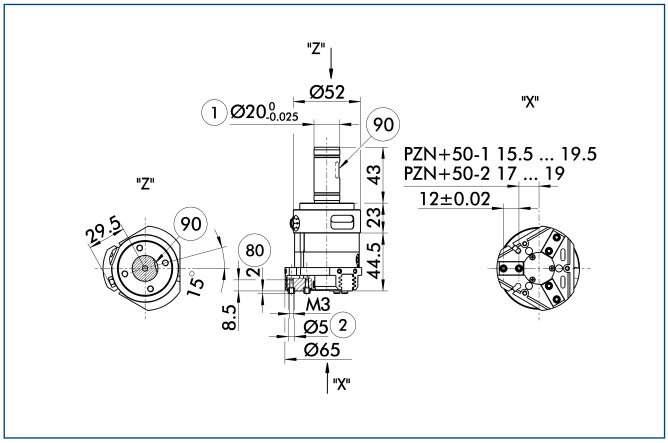


① Gripper connection
② Finger connection
80 Depth of the centering sleeve hole in the matching part
90 Weldon clamping surface

ⓘ Please refer to the gripper in question for more detailed information. Suitable gripper accessories can be found in the additional views at the end of the gripper size in question.

## GSW-B with PZN-plus 64

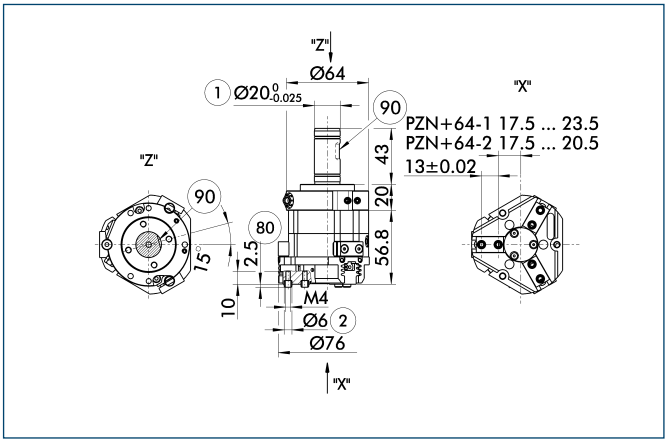


① Gripper connection
② Finger connection
80 Depth of the centering sleeve hole in the matching part
90 Weldon clamping surface

ⓘ Please refer to the gripper in question for more detailed information. Suitable gripper accessories can be found in the additional views at the end of the gripper size in question.

## GSW-B with PZN-plus 80

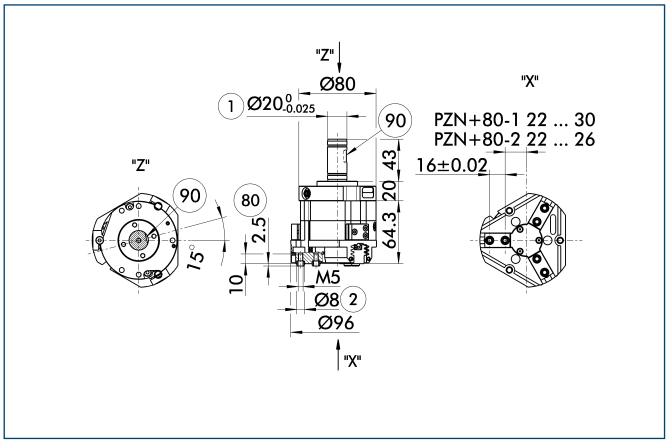


① Gripper connection
② Finger connection
80 Depth of the centering sleeve hole in the matching part
90 Weldon clamping surface

ⓘ Please refer to the gripper in question for more detailed information. Suitable gripper accessories can be found in the additional views at the end of the gripper size in question.

## GSW-B with PZN-plus 100

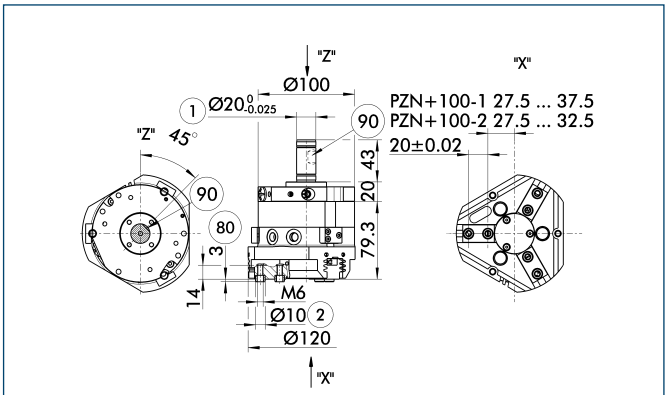


① Gripper connection
② Finger connection
80 Depth of the centering sleeve hole in the matching part
90 Weldon clamping surface

ⓘ Please refer to the gripper in question for more detailed information. Suitable gripper accessories can be found in the additional views at the end of the gripper size in question.

# GSW-B with 3-Finger Centric Gripper



## Mounting kit for RSS

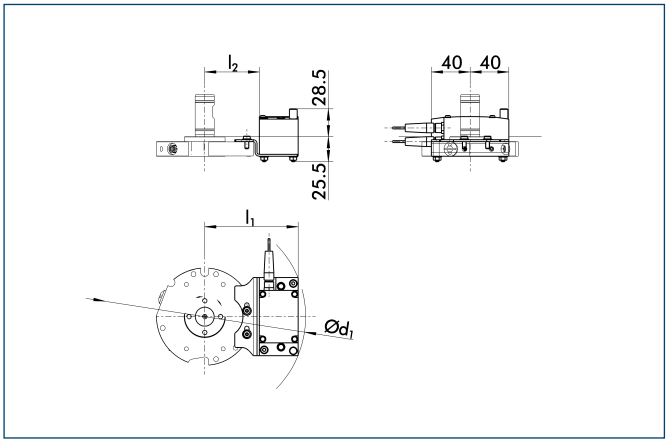


RSS mounted with mounting kit

| Description | ID | $l_1$ | $l_2$ | $d_1$ |
|---|---|---|---|---|
| Mounting kit for RSS | | | | |
| AS-RSS-GSW-H | **0308440** | | | |
| GSW-B 64-PZ | | 79 mm | 38 mm | Ø 177 mm |
| GSW-B 80-PZ | | 87 mm | 46 mm | Ø 191 mm |
| GSW-B 100-PZ | | 97 mm | 56 mm | Ø 210 mm |

The transmitter RSS-T2 can be assembled with the mentioned attachment kit.

## Reed Switches – RSS – Mounting kits

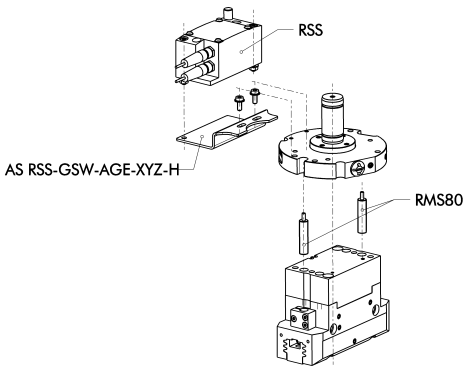


End position monitoring mounted with mounting kit

| Description | ID |
|---|---|
| Mounting kit for RSS | |
| AS-RSS-GSW-H | **0308440** |
| Radio system RSS | |
| RSS-T2 | **0377710** |
| RSS-R1 | **0377700** |
| RSS-R-A | **0377730** |
| Mounting kit for Reed Switches | |
| AS-RMS 80 PGN/PZN-plus 64/80 | **0377725** |
| AS-RMS 80 PGN/PZN-plus 100/125 | **0377726** |
| Reed Switches | |
| RMS 22-S-M8 | **0377720** |
| RMS 80-S-M8 | **0377721** |

The radio system consists of a transmitter RSS-T2, the receiver RSS-R1 and the antenna RSS-R-A.
For cylindrical reed switches RMS 80 the mentioned attachment kits are required, and can be directly assembled into the sensor's C-slot of the grippers. In case of gripper size 50 standard monitoring is not possible. For size 64 just via reed switch RMS 80 is necessary.

- ⓘ Two sensors (Closer/S) are required for each gripper, plus extension cables as an option.
- ⓘ The mounting kit needs to be ordered optionally as an accessory.
- ⓘ Please note the minimum permitted bending radii for the sensor cables, which are generally 35 mm.

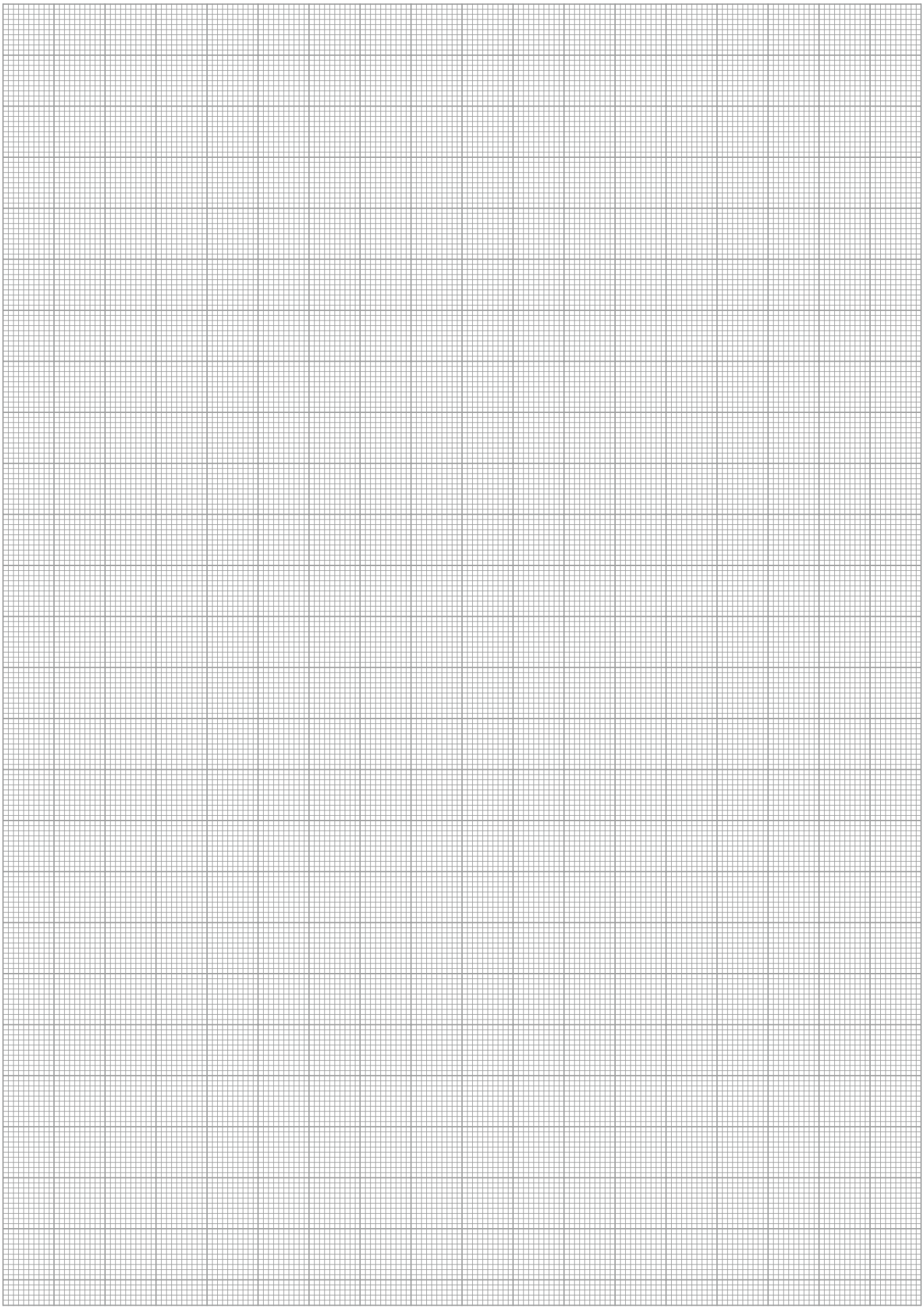

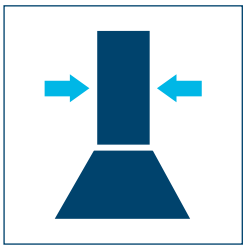

**Suction pad diameter**
30 mm ... 125 mm

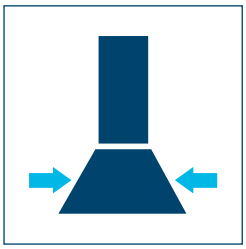

**Clamping diameter**
20 mm ... 32 mm




**Weight**
0.12 kg ... 0.39 kg

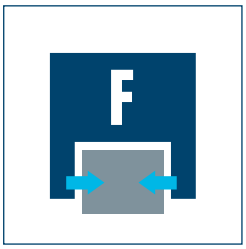


**Gripping force**
55 N ... 980 N




**Workpiece weight**
0.28 kg ... 4.9 kg

## Application example




Handling of gears in a milling center

1. Vaccuum Gripper GSW-V
2. Gripper with shaft diameter GSW-B and PGN-plus
3. Gripper with shaft diameter GSW-B and PZN-plus
4. Cleaning Unit RGG
5. Radio sensor system RSS

## Vacuum Gripper

Vacuum gripper for spindle interfaces is ideal for handling relatively flat components.

## Field of application

Unit for automatic loading and unloading of machining centers by their own axis, which provides a compressed air and collant supply via the tool mounting.

## Your advantages and benefits

**Low-price module**
for flexible automation of your machine

**Fast, automated gripper changeover**
from the gripper to the storage rack

**Fully automated workpiece changeover**
without robot- or gantry system

**Universally**
suited for many different workpieces



## General note to the series

**Principle of function**
Venturi nozzle

**Housing material**
Aluminum

**Material of spindle interface**
Aluminum alloy

**Suction pad material**
NBR-60

**Actuation**
hydraulically by internal coolant supply (filtered, maximum particle size 30 microns) or pneumatically, via filtered compressed air (10 microns): dry, lubrified or non-lubrified pressure medium: Requirement to the compressed air quality as per DIN ISO 8573-1: 6 4 4

**Warranty**
24 months (details, general terms and conditions and operation manuals can be downloaded under www.schunk.com)

**Scope of delivery**
Assembly and operating manual

## Sectional diagram

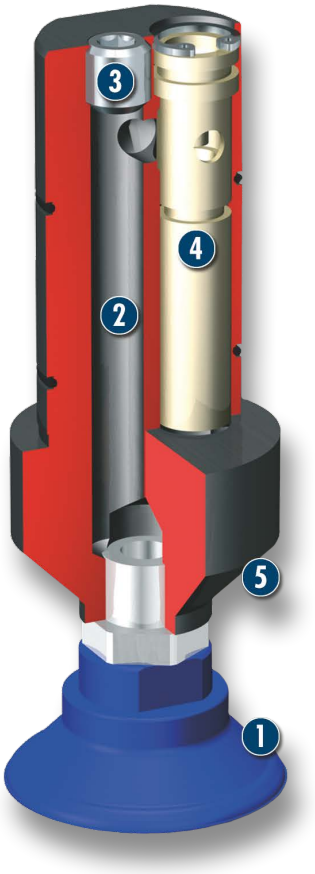


**1 Vacuum suction cup**
for a flexible range of parts

**2 Intake duct**
for producing suction power

**3 Introduction of medium**
via spindel interface

**4 Venturi nozzle**
for producing negativ pressure

**5 Outlet opening**
for diverting the negative pressure

## Functional description

The gripper can be used in any machine which provides compressed air or lubricating coolants supply via the toolholder taper.
The vacuum gripper is equipped with an integrated Venturi nozzle, and therefore does not require a vacuum connection to generate negative pressure.
During the gripping operation the gripper continuously supplies coolant or compressed air by the outlet port.

## Options and special information

Please note that applications under extreme conditions (e.g. coolant, casting or abrasive dust) will reduce the service lifetime of this product considerably.
Further shaft diameters on request.
Please note that the product is not suitable for heat shrinking toolholders.

### Precondition

If the spindles to not rotate, them machines have to provide compressed air or coolant.

## Accessories

Accessories from SCHUNK – the suitable supplement for maximum functionality, reliability and performance of all automation modules.

### Cleaning Unit



### Mechanic gripper



### Toolholder






ⓘ For the exact size of the required accessories, availability of this size and the designation and ID, please refer to the additional views at the end of the size in question. You will find more detailed information on our accessory range in the “Accessories” catalog section.

## General note to the series

### Suction pad

Perfectly adaptable to smooth surfaces, with dampening effect during attachment and stroke effect during the suction phase.
Special suction cups on request.

### Times

The indicated times depend on the flow rate and pressure of the drive medium and the therefrom resulting electrical resistances.

### Workpiece weight

The recommended workpiece weight is calculated for a force-fit connection, indicated nominal flow rate and pressure as well as a safety factor of 2 against the weight of the acceleration of gravity g.

# GSW-V 20





## Technical data

| Description | | GSW-V 20 | GSW-V 20-SND030 | GSW-V 20-SND080 | GSW-V 20-SND125 |
|---|---|---|---|---|---|
| ID | | 0309120 | 0309121 | 0309122 | 0309123 |
| Weight | [kg] | 0.12 | 0.14 | 0.19 | 0.28 |
| Recommended workpiece weight | [kg] | | 0.28 | 2 | 4.9 |
| Time evacuation | [s] | | 1 | 1.1 | 1.2 |
| Time for putting down | [s] | | 0.7 | 0.7 | 0.7 |
| Suction force | [N] | | 55 | 400 | 980 |
| Min./max. ambient temperature | [°C] | -10/90 | -10/90 | -10/90 | -10/90 |
| Max. admissible speed | [1/min] | 20 | 20 | 20 | 20 |
| Nominal operating pressure compressed air | [bar] | 6 | 6 | 6 | 6 |
| Nominal flow rate compressed air | [l/min] | 300 | 300 | 300 | 300 |
| Min./max. operating pressure compressed air | [bar] | 4/8 | 4/8 | 4/8 | 4/8 |
| Min. flow rate compressed air | [l/min] | 220 | 220 | 220 | 220 |
| Nominal operating pressure coolant | [bar] | 40 | 40 | 40 | 40 |
| Nominal flow rate coolant | [l/min] | 25 | 25 | 25 | 25 |
| Min./max. operating pressure coolant | [bar] | 20/60 | 20/60 | 20/60 | 20/60 |
| Nominal vaccuum | [bar] | -0.8 | -0.8 | -0.8 | -0.8 |
| Minimum vaccuum | [bar] | -0.6 | -0.6 | -0.6 | -0.6 |
| Noise pressure level | [dB(A)] | 90 | 90 | 90 | 90 |

## Main view

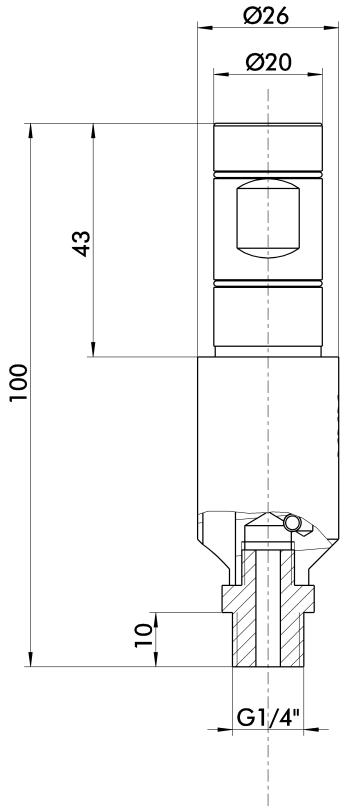


## Suction cup dimensions

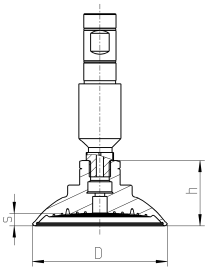


| Description | ID | D | H | S |
|---|---|---|---|---|
| Suction pad | | | | |
| SND 30-G1/4 | **0309135** | 34 mm | 20 mm | 3 mm |
| SND 80-G1/4 | **0309136** | 89 mm | 40 mm | 7.6 mm |
| SND 125-G1/4 | **0309137** | 135 mm | 48 mm | 12.5 mm |

You can find more detailed information and individual parts of the above-mentioned accessories in the “Accessories” catalog section.

# GSW-V 25





## Technical data

| Description | | GSW-V 25 | GSW-V 25-SND030 | GSW-V 25-SND080 | GSW-V 25-SND125 |
|---|---|---|---|---|---|
| ID | | 0309125 | 0309126 | 0309127 | 0309128 |
| Weight | [kg] | 0.15 | 0.17 | 0.22 | 0.31 |
| Recommended workpiece weight | [kg] | | 0.28 | 2 | 4.9 |
| Time evacuation | [s] | | 1 | 1.1 | 1.2 |
| Time for putting down | [s] | | 0.7 | 0.7 | 0.7 |
| Suction force | [N] | | 55 | 400 | 980 |
| Min./max. ambient temperature | [°C] | -10/90 | -10/90 | -10/90 | -10/90 |
| Max. admissible speed | [1/min] | 20 | 20 | 20 | 20 |
| Nominal operating pressure compressed air | [bar] | 6 | 6 | 6 | 6 |
| Nominal flow rate compressed air | [l/min] | 300 | 300 | 300 | 300 |
| Min./max. operating pressure compressed air | [bar] | 4/8 | 4/8 | 4/8 | 4/8 |
| Min. flow rate compressed air | [l/min] | 200 | 200 | 200 | 200 |
| Nominal operating pressure coolant | [bar] | 40 | 40 | 40 | 40 |
| Nominal flow rate coolant | [l/min] | 25 | 25 | 25 | 25 |
| Min./max. operating pressure coolant | [bar] | 20/60 | 20/60 | 20/60 | 20/60 |
| Nominal vaccuum | [bar] | -0.8 | -0.8 | -0.8 | -0.8 |
| Minimum vaccuum | [bar] | -0.6 | -0.6 | -0.6 | -0.6 |
| Noise pressure level | [dB(A)] | 94 | 94 | 94 | 94 |

## Main view

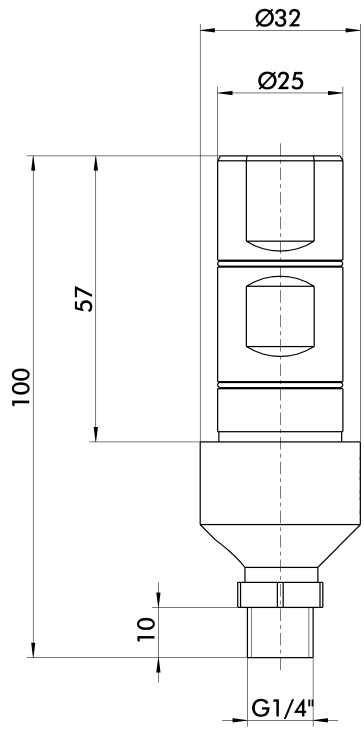


## Suction cup dimensions

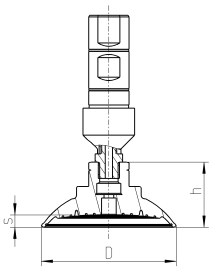


| Description | ID | D | H | S |
|---|---|---|---|---|
| Suction pad | | | | |
| SND 30-G1/4 | **0309135** | 34 mm | 20 mm | 3 mm |
| SND 80-G1/4 | **0309136** | 89 mm | 40 mm | 7.6 mm |
| SND 125-G1/4 | **0309137** | 135 mm | 48 mm | 12.5 mm |

You can find more detailed information and individual parts of the above-mentioned accessories in the “Accessories” catalog section.

# GSW-V 32





## Technical data

| Description | | GSW-V 32 | GSW-V 32-SND030 | GSW-V 32-SND080 | GSW-V 32-SND125 |
|---|---|---|---|---|---|
| ID | | 0309130 | 0309131 | 0309132 | 0309133 |
| Weight | [kg] | 0.23 | 0.24 | 0.3 | 0.39 |
| Recommended workpiece weight | [kg] | | 0.28 | 2 | 4.9 |
| Time evacuation | [s] | | 1 | 1.1 | 1.2 |
| Time for putting down | [s] | | 0.7 | 0.7 | 0.7 |
| Suction force | [N] | | 55 | 400 | 980 |
| Min./max. ambient temperature | [°C] | -10/90 | -10/90 | -10/90 | -10/90 |
| Max. admissible speed | [1/min] | 20 | 20 | 20 | 20 |
| Nominal operating pressure compressed air | [bar] | 6 | 6 | 6 | 6 |
| Nominal flow rate compressed air | [l/min] | 350 | 350 | 350 | 350 |
| Min./max. operating pressure compressed air | [bar] | 4/8 | 4/8 | 4/8 | 4/8 |
| Min. flow rate compressed air | [l/min] | 250 | 250 | 250 | 250 |
| Nominal operating pressure coolant | [bar] | 40 | 40 | 40 | 40 |
| Nominal flow rate coolant | [l/min] | 25 | 25 | 25 | 25 |
| Min./max. operating pressure coolant | [bar] | 20/60 | 20/60 | 20/60 | 20/60 |
| Nominal vaccuum | [bar] | -0.8 | -0.8 | -0.8 | -0.8 |
| Minimum vaccuum | [bar] | -0.6 | -0.6 | -0.6 | -0.6 |
| Noise pressure level | [dB(A)] | 98 | 98 | 98 | 98 |

## Main view

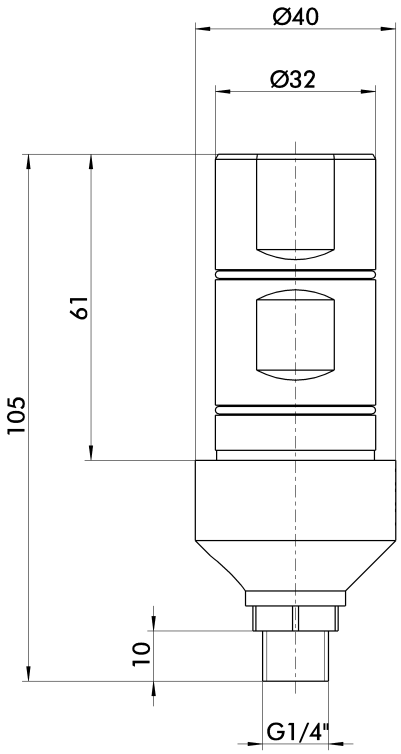


## Suction cup dimensions

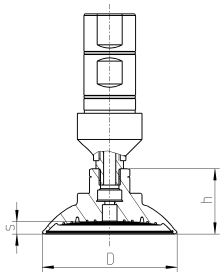


| Description | ID | D | H | S |
|---|---|---|---|---|
| Suction pad | | | | |
| SND 30-G1/4 | **0309135** | 34 mm | 20 mm | 3 mm |
| SND 80-G1/4 | **0309136** | 89 mm | 40 mm | 7.6 mm |
| SND 125-G1/4 | **0309137** | 135 mm | 48 mm | 12.5 mm |

You can find more detailed information and individual parts of the above-mentioned accessories in the “Accessories” catalog section.

**Size**
20

**Weight**
0.1 g

## Application example




Handling of gears in a milling center

1. Vaccuum Gripper GSW-V
2. Gripper with shaft diameter GSW-B and PGN-plus
3. Gripper with shaft diameter GSW-B and PZN-plus
4. Cleaning Unit RGG
5. Radio sensor system RSS

## Cleaning Unit
for cleaning of clamping devices and for automating machine tools

## Field of application
every machine with conventinal tool mountings and compressed air or coolant supply by the spindle



## Your advantages and benefits

**Low-price module**
for flexible automation of your machine

**Fast, automatic cleaning**
for a maximum machine utilization

**Idle times**
reduced on a minimum

**Increased safety**
for machine operator

## General note to the series

**Material of spindle interface**
Aluminum alloy

**Actuation**
hydraulically by internal coolant supply (filtered, maximum particle size 30 microns) or pneumatically, via filtered compressed air (10 microns): dry, lubrified or non-lubrified pressure medium: Requirement to the compressed air quality as per DIN ISO 8573-1: 6 4 4

**Warranty**
24 months (details, general terms and conditions and operation manuals can be downloaded under www.schunk.com)

**Scope of delivery**
Locking screws, set-screws, assembly and operation manual

## Sectional diagram

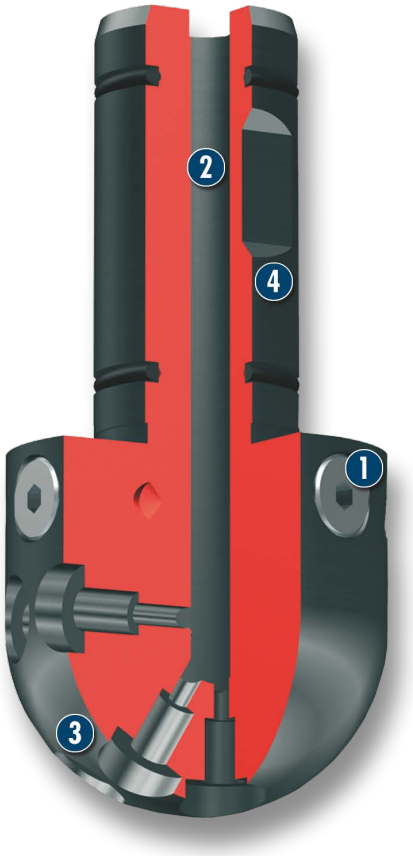


1 **Locking screws and restrictor inserts**
for changing the cleaning jet

2 **Center bore**
for introduction of cleaning medium

3 **Outlet openings**
for producing cleaning jets

4 **Clamping diameter**
for mounting in any toolholding system

## Functional description

The Cleaning Unit can be used in any machine which provides compressed air or lubricating coolants supply via the toolholder taper.
Cleanliness made simple – a total of six nozzles on the ballhead blow out a powerful jet of air or coolant, which is forced from the toolholder taper into the shaft of the cleaning unit via a bore.
The head can also rotate with the machine tool spindle when it moves, and can reach all corners of the working area.

## Options and special information

Please note that applications under extreme conditions (e.g. coolant, casting or abrasive dust) will reduce the service lifetime of this product considerably.
Further shaft diameters on request.
Please note that the product is not suitable for heat shrinking toolholders.

## Accessories

Accessories from SCHUNK – the suitable supplement for maximum functionality, reliability and performance of all automation modules.

### Vacuum Gripper



### Mechanic gripper



### Toolholder






ⓘ For the exact size of the required accessories, availability of this size and the designation and ID, please refer to the additional views at the end of the size in question. You will find more detailed information on our accessory range in the “Accessories” catalog section.

# RGG 20





## Technical data

| Description | | RGG 20 |
|---|---|---|
| **ID** | | **0308590** |
| Weight | [g] | 0.1 |
| Min./max. ambient temperature | [°C] | -10/90 |
| Max. admissible speed | [1/min] | 100 |
| Max. operating pressure | [bar] | 80 |
| Material | | Aluminum alloy |

## Main view

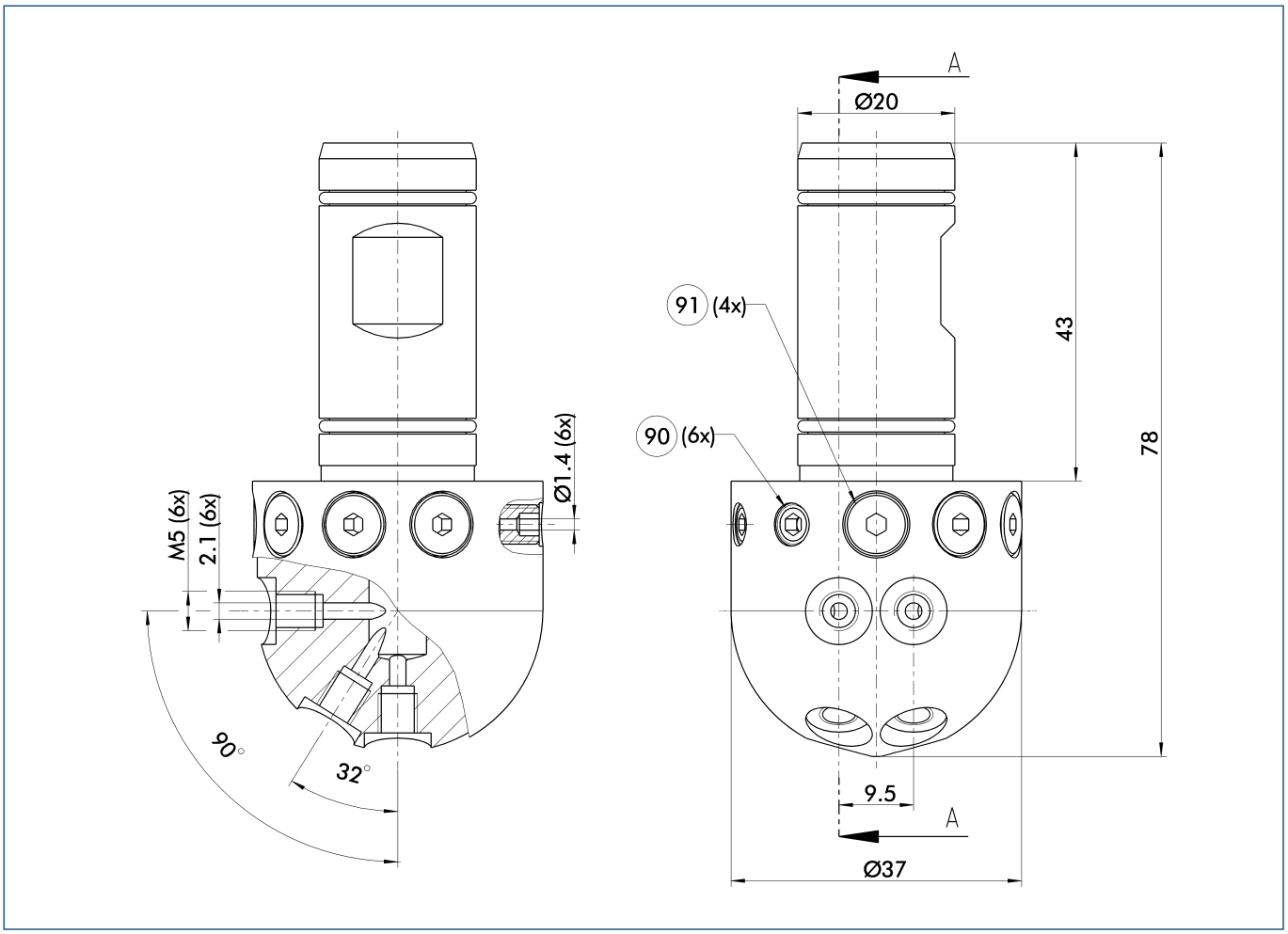


For reducing the jet of the nozzles, the set-screws with nozzle bores can be used. Unused nozzles can be closed with the locking screws.

90 Set-screws with throttling port
91 Locking screws

# Accessories

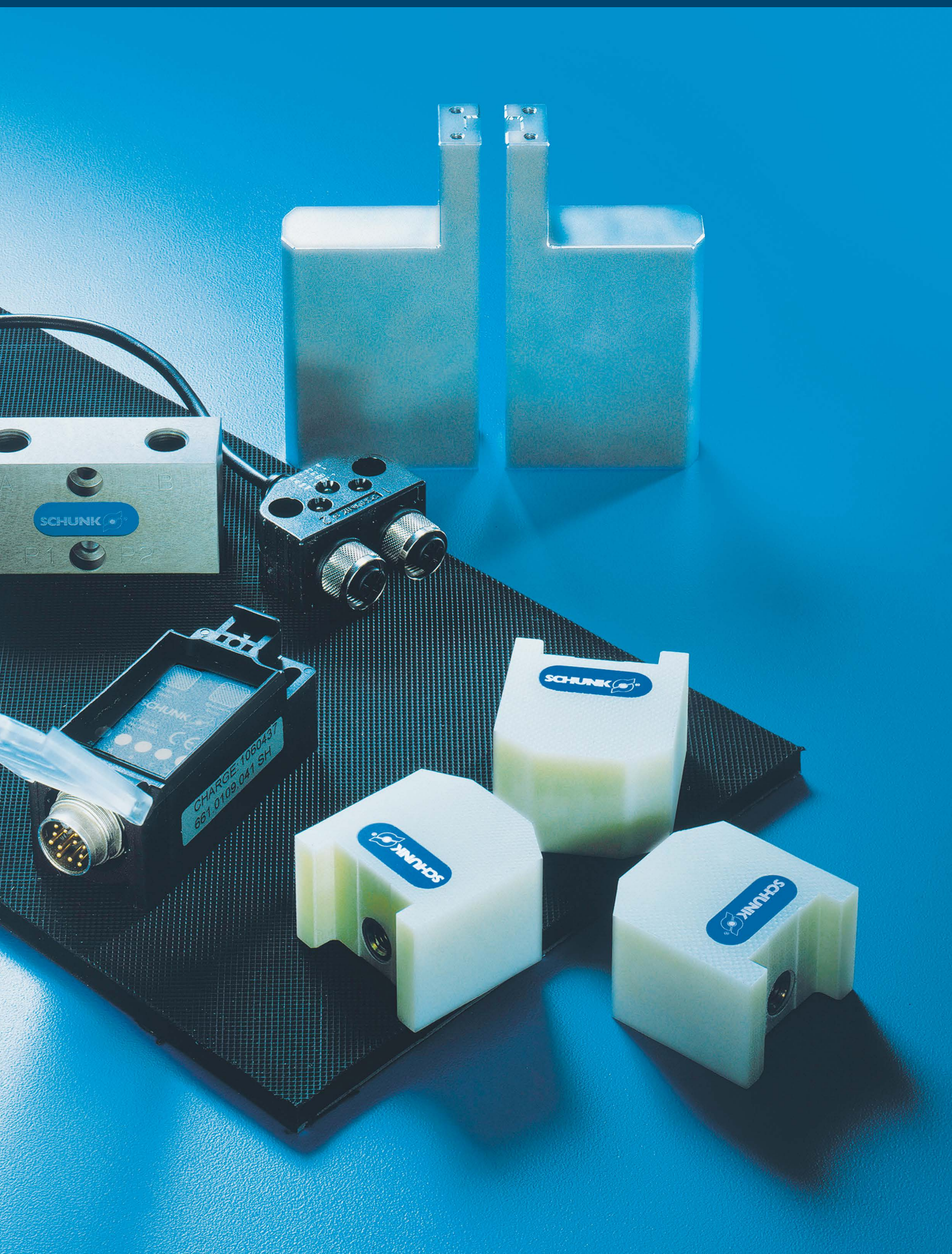

ACCESSORIES


| Series | Size | Page |
|---|---|---|
| **Accessories** | | |
| Motion Controller electric | | |
| MCS | | 1342 |
| MCS | 06 | 1344 |
| MCS | 12 | 1346 |
| MEG-C | | 1348 |
| MEG-C | 40/50/64 | 1350 |
| Inductive Proximity Switches IN | | 1352 |
| IN | 3 | 1354 |
| IN | 5 | 1356 |
| IN | 8 | 1358 |
| IN | 40 | 1360 |
| IN | 40-SA | 1362 |
| IN | 60 | 1364 |
| IN | 65 | 1366 |
| IN | 80 | 1368 |
| IN | 80-SA | 1370 |
| IN | C-80/80SL | 1372 |
| IN | 120 | 1374 |
| Magnetic Switches MMS-P | | 1376 |
| MMS-P | 22 | 1378 |
| Magnetic Switches MMS | | 1380 |
| MMS | 22 | 1382 |
| MMS | 22-SA | 1384 |
| MMS | 30 | 1386 |
| MMSK | 65 | 1388 |
| Reed Switches RMS | | 1390 |
| RMS | 22 | 1392 |
| RMS | 80 | 1394 |
| Optical Switches ONS | | 1396 |
| ONS | 01 | 1398 |
| Switch Accessories | | |
| SST | | 1400 |
| NHG | | 1404 |
| Sensor Distributor | | 1408 |
| Y-Distributor | | 1410 |
| V 2 | | 1412 |
| V 4 | | 1414 |
| V 8 | | 1418 |
| Cable and Connector fluidic | | 1422 |
| KV | | 1424 |
| KA | | 1426 |
| KST-M8/KBU-M8 | | 1432 |
| KST-M12/KBU-M12 | | 1434 |

| Series | Size | Page |
|---|---|---|
| **Accessories** | | |
| Measuring Systems | | |
| APS-M1 | | 1436 |
| FPS/FPS-S/FPS-F5/FPS-Software | | 1440 |
| FMS/FMS-A/FMS-ZBA/-ZBP | | 1448 |
| Transmission Systems | | |
| RSS/RSS-T2/RSS-R1 | | 1456 |
| Fluidic Monitoring System | | |
| PA3 | | 1462 |
| Finger Blanks and Intermediate Jaws | | 1466 |
| ABR-plus/SBR-plus | | 1468 |
| ABR for MPG | | 1472 |
| ABR for PG | | 1474 |
| ABR for MPZ | | 1476 |
| RB for KTG | | 1478 |
| RB for KGG | | 1480 |
| ZBH for PFH | | 1482 |
| Clamping Inserts for Gripper Fingers | | |
| Quentes | | 1486 |
| HM | | 1490 |
| HKI | | 1496 |
| Quick-change Jaw System | | |
| BSWS | | 1500 |
| Universal Intermediate Jaw | | |
| UZB | | 1506 |
| Dust Cover | | |
| HUE for PGN-plus | | 1512 |
| HUE for PZN-plus | | 1518 |
| Fastening Elements | | |
| ZHU | | 1524 |
| PAM | | 1528 |
| Valves and Screw Connections | | 1536 |
| SDV-P | | 1538 |
| WV-G | | 1539 |
| SWV | | 1540 |
| DSV | | 1541 |
| Grease | | |
| Grease | | 1542 |

## Electric controller MCS

Electric controllers are used for actuating/controlling mechatronic modules and systems without integrated electronics. SCHUNK offers these controllers in the versions MCS06 for EVG grippers, and the MCS12 version for EGN/EZN/EVG grippers, and STM rotary modules.







## Description of function

The MCS controller is an electronic device that is used to actuate/control mechatronic modules.

## Your advantages and benefits

**Mounting on DIN rail**
for quick installation in the control cabinet

**High accuracy and flexibility**
for positioning processes with, for example, highly accurate positioning or exact force/torque control

**MCDemo setup software**
for simple and fast configuration

**Field bus communication for Profibus-DP and CAN**
for flexible integration into existing systems

## Field of application

application in a clean environment in connection with the corresponding SCHUNK grippers or rotary modules

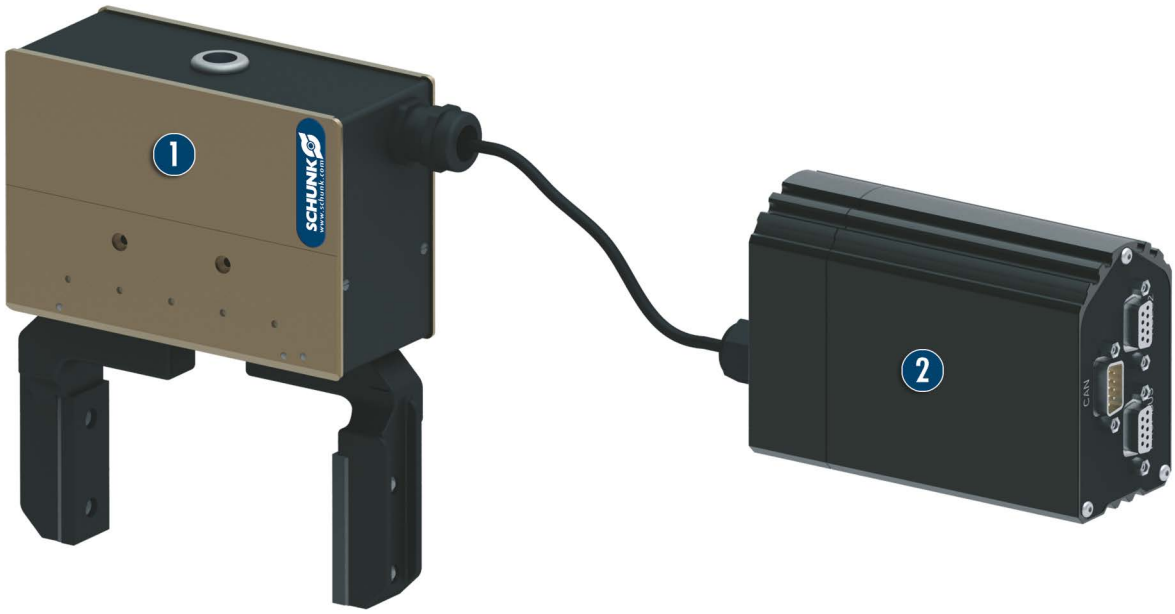


1 2-finger parallel gripper EVG

2 MCS06 controller

## General information

**Warranty**
24 months

## Notes

The MCS06/12 controllers are designed for installation in industrial control cabinets.

# MCS06





## Technical data

| Description | | MCS06 | |
|---|---|---|---|
| Version | | EVG 55-40 | EVG 55-100 |
| ID | | 0306030 | 0306031 |
| **General technical data** | | | |
| Protection class | | IP30 | |
| Power supply (logic) | [VDC] | 24 | |
| Power supply (load) | [VDC] | 24 | |
| Nominal/max. current (load) | [A] | 4.0/8.5 | 5.0/8.5 |
| Weight | [kg] | 0.46 | |
| Dimensions (W x H x D) | [mm] | 53/97/87 | |
| Min./max. ambient temperature | [°C] | 5/45 | |
| Type of mounting | | DIN rail | |
| Motors/modules/systems | | EVG | |
| Supported types of encoder | | Encoder, resolver | |
| **Control types/functions** | | | |
| Position control | | Yes | |
| Speed control | | Yes | |
| Current control | | Yes | |
| Force control | | Yes, via value of current | |
| Technological functions | | Pseudo absolute-value transducer function, freely programmable operations can be saved, actuation directly or using operations by means of digital I/Os or field bus interface | |
| Safety functions | | - | |
| **Interfaces** | | | |
| Number of digital inputs/outputs | | 4/4 | |
| Number of analouge inputs/outputs | | -/- | |
| Type/number/connection of field bus | | Profibus-DP/1/SUB-D | |
| Type/number/connection of field bus | | CAN/1/SUB-D | |
| Type/number/connection of parameterisation | | RS232/1/SUB-D | |
| Type/number/connection of parameterisation | | Profibus-DP/-/via field bus connection | |
| Type/number/connection of parameterisation | | CAN/-/via field bus connection | |
| **Tools** | | | |
| Software | | MCDemo setup tool, function block for S7-300/400 for actuation | |

## Main view

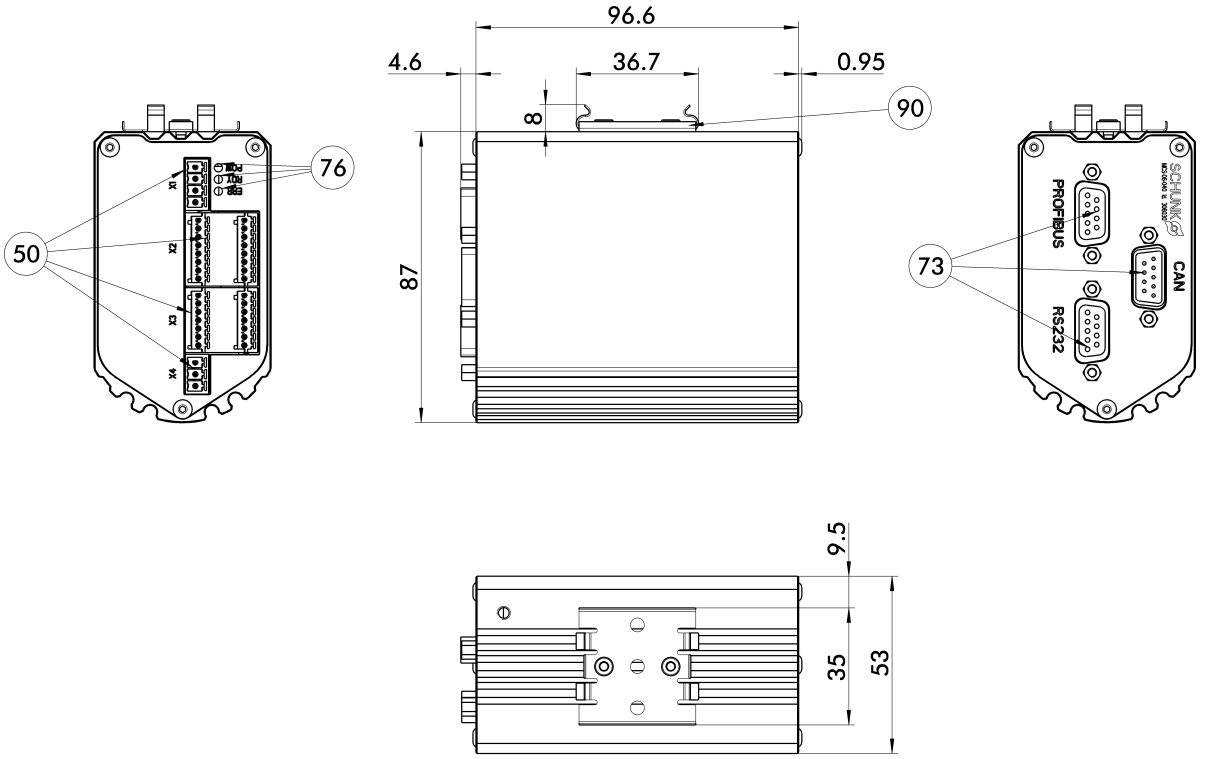


(50) Terminal strips
(73) Communication interfaces
(76) LEDs
(90) DIN rail for mounting




## Technical data

| Description | | MCS12 | | | |
|---|---|---|---|---|---|
| Version | | EGN/EZN | STM 130 | STM 170 | STM 210 |
| ID | | 0307010 | 0307015 | 0307016 | 0307017 |
| **General technical data** | | | | | |
| Protection class | | IP30 | | | |
| Power supply (logic) | [VDC] | 24 | | | |
| Power supply (load) | [VDC] | 24 | 48 | 48 | 48 |
| Nominal/max. current (load) | [A] | 6.0/8.0 | 4.2/13.0 | 6.7/18.8 | 6.2/24.0 |
| Weight | [kg] | 0.98 | | | |
| Dimensions (W x H x D) | [mm] | 82/157/92 | | | |
| Min./max. ambient temperature | [°C] | 5/45 | | | |
| Type of mounting | | DIN rail | | | |
| Motors/modules/systems | | EGN, EZN, STM (48V DC) | | | |
| Supported types of encoder | | Encoder, Resolver | | | |
| **Control types/functions** | | | | | |
| Position control | | Yes | | | |
| Speed control | | Yes | | | |
| Current control | | Yes | | | |
| Force control | | Yes, using current value | | | |
| Technological functions | | Pseudo absolute-value transducer function, freely programmable operations can be saved, actuation directly or using operations by means of digital I/Os or field bus interface | | | |
| Safety functions | | - | | | |
| **Interfaces** | | | | | |
| Number of digital inputs/outputs | | 4/4 | | | |
| Number of analouge inputs/outputs | | -/- | | | |
| Type/number/connection of field bus | | Profibus-DP/1/SUB-D | | | |
| Type/number/connection of field bus | | CAN/1/SUB-D | | | |
| Type/number/connection of parameterisation | | RS232/1/SUB-D | | | |
| Type/number/connection of parameterisation | | Profibus-DP/-/via field bus connection | | | |
| Type/number/connection of parameterisation | | CAN/-/via field bus connection | | | |
| **Tools** | | | | | |
| Software | | MCDemo setup tool, function block for S7-300/400 for actuation | | | |

## Main view

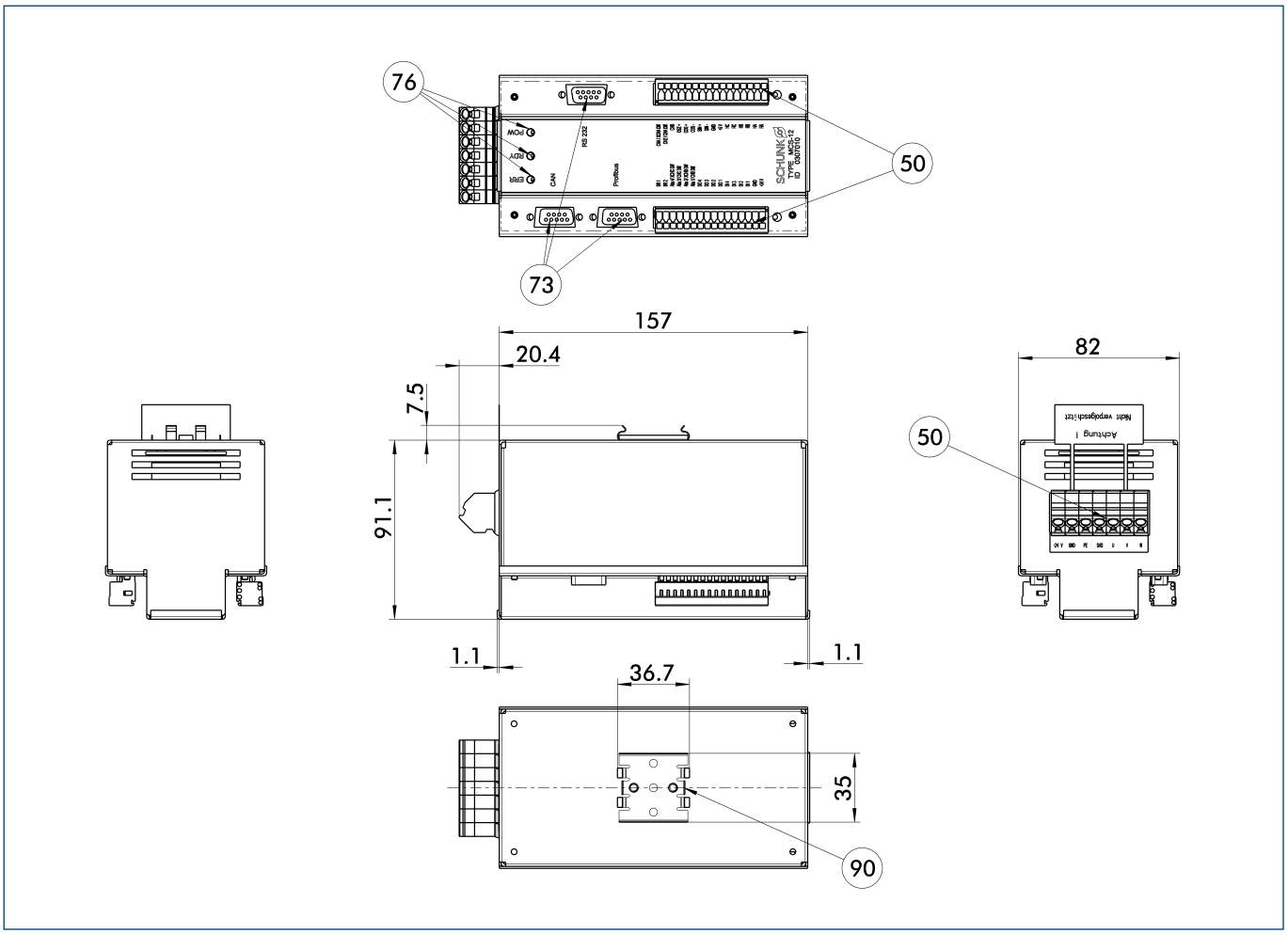


50 Terminal strips
73 Communication interfaces
76 LEDs
90 DIN rail for mounting

## Electric controller MEG-C

Electric controllers are used for actuating/controlling mechatronic modules and systems without integrated electronics. The MEG-C controllers are offered by SCHUNK in the versions MEG-C-40, MEG-C-50, and MEG-C-64 for MEG EC grippers.




## Description of function

The MEG-C controller is an electronic device that is used to actuate/control the MEG-EC mechatronic grippers.

## Your advantages and benefits

**Mounting on DIN rail**
for quick installation in the control cabinet

**High accuracy and flexibility**
for positioning processes with, for example, accurate positioning or exact force control

**Easy actuation**
Actuation via digital inputs/outputs, analogue value specification

## Field of application

Application in a clean environment in connection with the corresponding SCHUNK MEG grippers




1 2-finger parallel gripper MEG-EC

2 MEG-C controller

## General information

**Warranty**
24 months

## Notes

The MEG-C controllers are designed for installation in industrial control cabinets.



## Technical data

| Description | | MEG-C | | |
|---|---|---|---|---|
| Version | | MEG-40 EC | MEG-50 EC | MEG-64 EC |
| ID | | 0307004 | 0307005 | 0307006 |
| **General technical data** | | | | |
| Protection class | | | IP30 | |
| Power supply (logic) | [VDC] | | 24 | |
| Power supply (load) | [VDC] | | 24 | |
| Nominal/max. current (load) | [A] | 1.0/1.5 | 1.0/1.5 | 2.0/5.0 |
| Weight | [kg] | | 0.3 | |
| Dimensions (W x H x D) | [mm] | | 35/99/114,5 | |
| Min./max. ambient temperature | [°C] | | -10/65 | |
| Type of mounting | | | DIN rail | |
| Motors/modules/systems | | | MEG | |
| Supported types of encoder | | | - | |
| **Control types/functions** | | | | |
| Position control | | | Yes | |
| Speed control | | | No | |
| Current control | | | Yes | |
| Force control | | | Yes, using current value | |
| Technological functions | | | Actuation directly via digital I/Os, parameter specificatino via analogue values | |
| Safety functions | | | - | |
| **Interfaces** | | | | |
| Number of digital inputs/outputs | | | 4/3 | |
| Number of analogue inputs/outputs | | | 3/1 | |
| Type/number/connection field bus | | | - | |
| Type/number/connection field bus | | | - | |
| Type/number/connection of parameterisation | | | - | |
| Type/number/connection of parameterisation | | | - | |
| Type/number/connection of parameterisation | | | - | |
| **Tools** | | | | |
| Software | | | - | |

## Main view

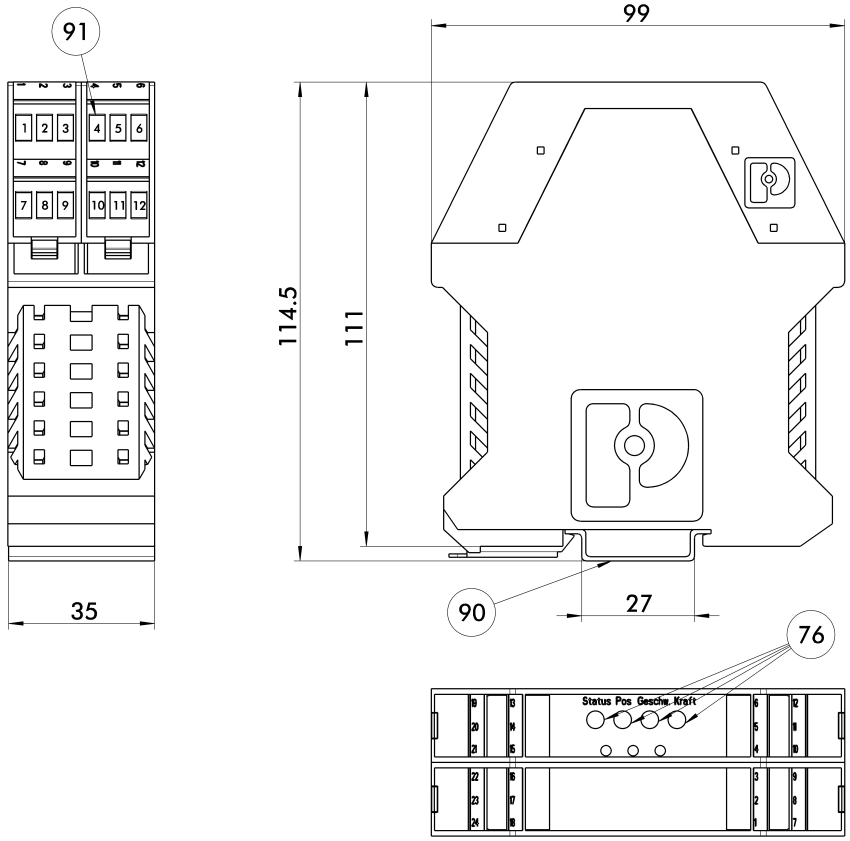


(76) LEDs
(90) DIN rail for mounting
(91) Terminal strips

## Inductive Proximity Switches

Inductive proximity switches are used to monitor the current position of automation components. They are available from SCHUNK in the versions IN (sensor with 30 cm molded cable and cable connector) or INK (sensor with 2 m long feeder cable and litz wires for wiring).




## Function description

With their oscillator coil, inductive proximity switches produce a high-frequency, alternating magnetic field. This field occurs on the active surface of the sensor. If a metal object enters the field, it draws energy from the magnetic field, thereby reducing the oscillation amplitude. This change is detected, and the sensor switches.

## Your advantages and benefits

**Mounting through bracket**
for simple, fast assembly

**Version with LED display**
for checking the switching state directly at the sensor

**Version with connector**
for easy, rapid replacement of extension cable

**Ultra-flexible PUR cable**
for a long life and resistance to many chemicals

**Proximity switch can be installed flush**
for minimal interfering contours in the application

## Application example

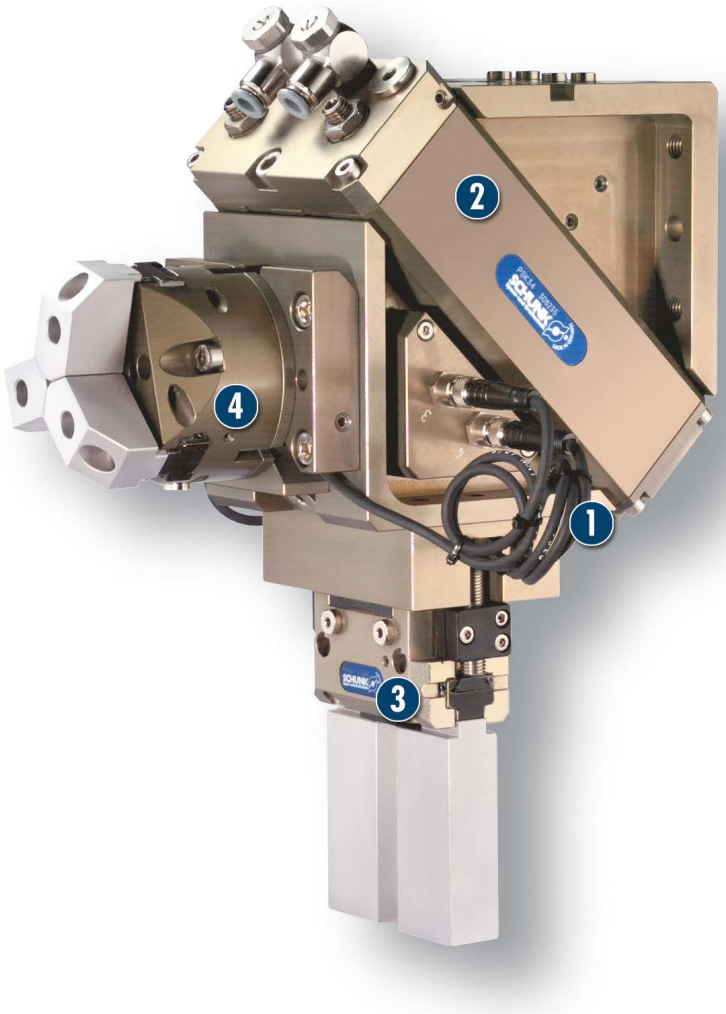


1 **Plug-in IN Sensors**

2 **PSK Swivel Head**

3 **PGN 2-Finger Parallel Gripper with ABR finger blanks**

4 **PZN 3-Finger Centric Gripper with workpiece-specific gripper fingers**

## Aera of application

For monitoring of gripping and rotary modules, linear modules and robot accessories. Inductive SCHUNK sensors detect metals without contact and are resistant to vibration, dust and humidity.
Operability in case of contact with other media (coolant, acids, bases, etc.) is often given, however cannot be guaranteed by SCHUNK.

## General information

### Protection class according to DIN 40050

IP 67 in plugged condition for the use in clean or dusty environments, or in case of contact with water. Operability in case of contact with other media (coolant, acids, bases, etc.) is often given, however cannot be guaranteed by SCHUNK.

### Voltage

10 – 30 V DC, residual ripple < 15%

### Switching method

PNP switching

### Warranty

24 months

## Notes

SCHUNK gripping, rotary and linear modules and robot accessory components must always be ordered from SCHUNK with the matching sensors, as these are ideally adapted to work together.
If major characteristics such as switching distance, switching function, hysteresis and voltage are largely the same, then proximity switches from other manufacturers may be used instead of inductive proximity switches (IN, INK) from SCHUNK.
However, if proximity switches from other manufacturers are used, SCHUNK cannot guarantee either their function or their functional reliability.



## Wiring diagram closer

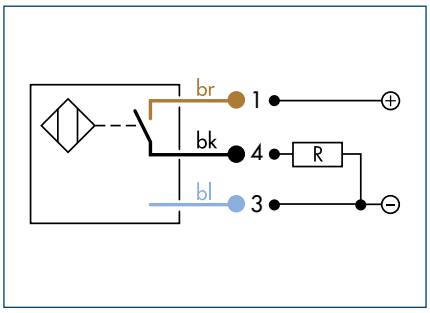


## Technical data

| Description | | IN 3-S-M8-PNP |
|---|---|---|
| ID | | 0301466 |
| Switching function | | Closer |
| Switching distance | [mm] | 0.6 |
| Switching hysterisis from the nominal switching distance | | < 5% |
| Type of switching | | PNP |
| Cable length | [cm] | 20 |
| Cable connector/cable end | | M8 |
| Type of voltage | | DC |
| Nominal voltage | [V] | 24 |
| Min. voltage | [V] | 10 |
| Max. voltage | [V] | 30 |
| Power failure | [V] | 1.5 |
| Max. switching current | [A] | 0.1 |
| Min./max. ambient temperature | [°C] | -25/75 |
| Max. switching frequency | [Hz] | 1000 |
| Typical switching time | [s] | 0 |
| Tightness IP (sensor) | | 67 |
| Tightness IP (sensor plugged) | | 67 |
| LED display at the sensor | | Yes |
| Cable diameter | [mm] | 2.5 |
| Min. bending radius (dynamically) | [mm] | 25 |
| Min. bending radius (statically) | [mm] | 12.5 |
| Number of cores | | 3 |
| Wire cross section | [mm²] | 0.14 |

ⓘ Never separate the cable between the sensor and the plug connector.

## IN 3 sensor

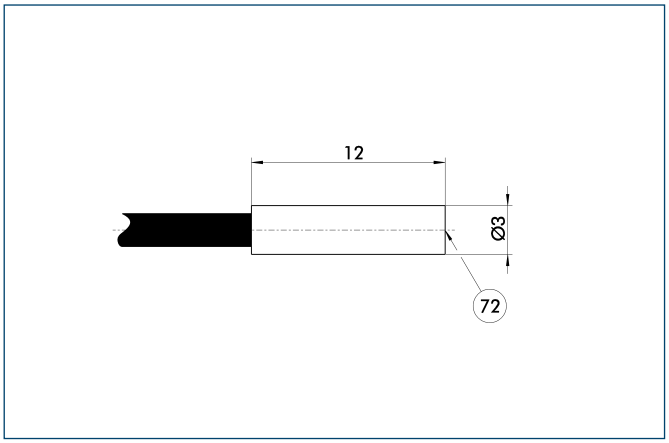


72 Active sensor surface

## M8 connector

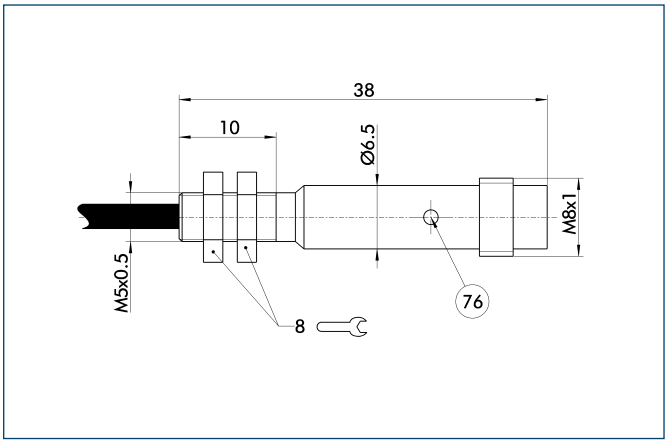


76 LED



## Wiring diagram closer

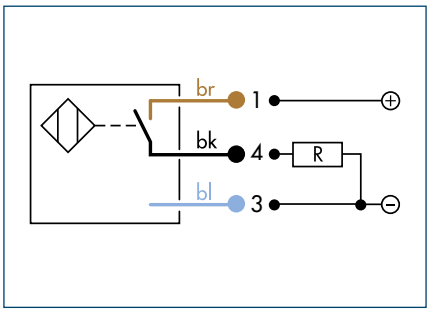


## Technical data

| Description | | IN 5-S-M8 | IN 5-S-M12 | INK 5-S |
|---|---|---|---|---|
| ID | | 0301469 | 0301569 | 0301501 |
| Switching function | | Closer | Closer | Closer |
| Switching distance | [mm] | 1 | 1 | 1 |
| Switching hysterisis from the nominal switching distance | | < 15% | < 15% | < 15% |
| Type of switching | | PNP | PNP | PNP |
| Cable length | [cm] | 30 | 30 | 200 |
| Cable connector/cable end | | M8 | M12 | open wires |
| Type of voltage | | DC | DC | DC |
| Nominal voltage | [V] | 24 | 24 | 24 |
| Min. voltage | [V] | 10 | 10 | 10 |
| Max. voltage | [V] | 30 | 30 | 30 |
| Power failure | [V] | 1.5 | 1.5 | 1.5 |
| Max. switching current | [A] | 0.2 | 0.2 | 0.2 |
| Min./max. ambient temperature | [°C] | -25/70 | -25/70 | -25/70 |
| Max. switching frequency | [Hz] | 1000 | 1000 | 1000 |
| Tightness IP (sensor) | | 67 | 67 | 67 |
| Tightness IP (sensor plugged) | | 67 | 67 | 67 |
| LED display at the sensor | | No | No | No |
| Cable diameter | [mm] | 3.5 | 3.5 | 3.5 |
| Min. bending radius (dynamically) | [mm] | 35 | 35 | 35 |
| Min. bending radius (statically) | [mm] | 17.5 | 17.5 | 17.5 |
| Number of cores | | 3 | 3 | 3 |
| Wire cross section | [mm²] | 0.14 | 0.14 | 0.14 |

## IN 5-S sensor

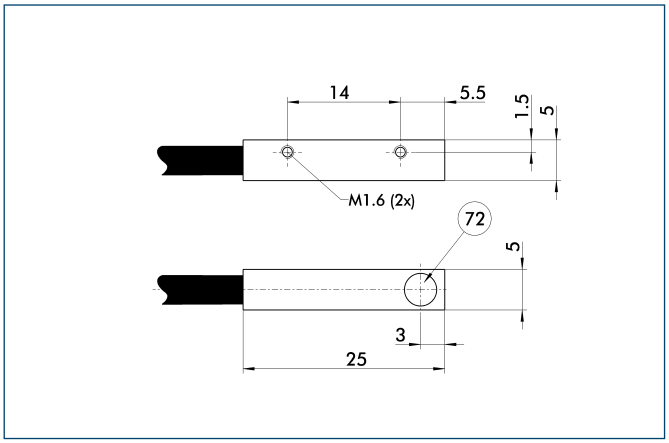


(72) Active sensor surface

## M8 connector

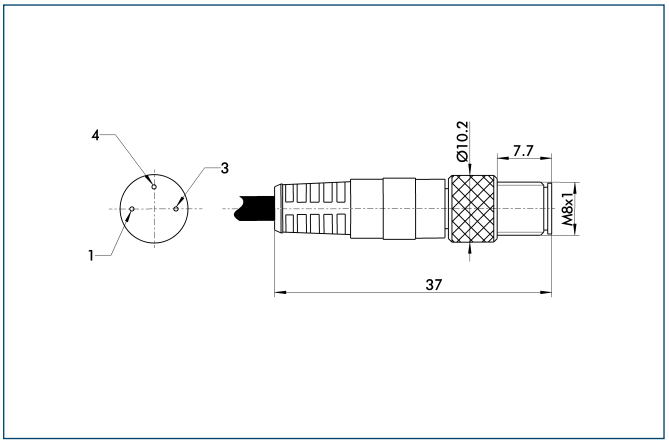


## M12 connector

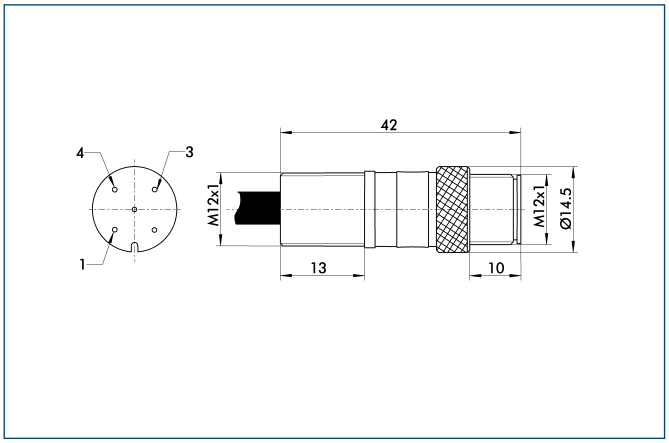



## Wiring diagram closer

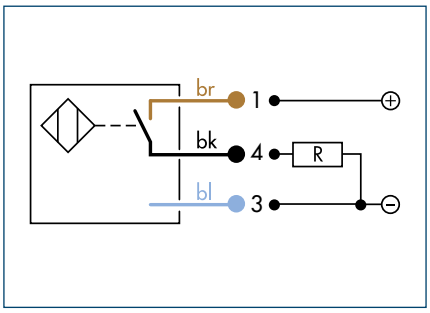


## Technical data

| Description | | IN 8-S-M8 | IN 8-S-M12 | INK 8-S |
|---|---|---|---|---|
| ID | | 0301481 | 0301581 | 9700052 |
| Switching function | | Closer | Closer | Closer |
| Switching distance | [mm] | 0.8 | 0.8 | 0.8 |
| Switching hysterisis from the nominal switching distance | | < 15% | < 15% | < 15% |
| Type of switching | | PNP | PNP | PNP |
| Cable length | [cm] | 30 | 30 | 200 |
| Cable connector/cable end | | M8 | M12 | open wires |
| Type of voltage | | DC | DC | DC |
| Nominal voltage | [V] | 24 | 24 | 24 |
| Min. voltage | [V] | 10 | 10 | 10 |
| Max. voltage | [V] | 30 | 30 | 30 |
| Power failure | [V] | 1.5 | 1.5 | 1.5 |
| Max. switching current | [A] | 0.2 | 0.2 | 0.2 |
| Min./max. ambient temperature | [°C] | -25/70 | -25/70 | -25/70 |
| Max. switching frequency | [Hz] | 1000 | 1000 | 1000 |
| Tightness IP (sensor) | | 67 | 67 | 67 |
| Tightness IP (sensor plugged) | | 67 | 67 | 67 |
| LED display at the sensor | | No | No | No |
| Cable diameter | [mm] | 3.5 | 3.5 | 3.5 |
| Min. bending radius (dynamically) | [mm] | 35 | 35 | 35 |
| Min. bending radius (statically) | [mm] | 17.5 | 17.5 | 17.5 |
| Number of cores | | 3 | 3 | 3 |
| Wire cross section | [mm²] | 0.14 | 0.14 | 0.14 |

## IN 8-S sensor

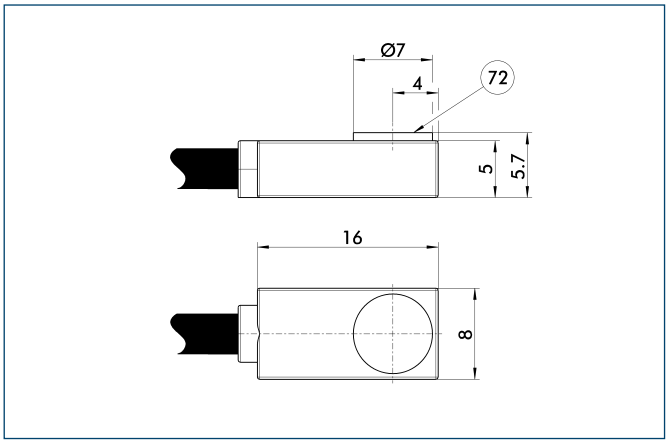


(72) Active sensor surface

## M8 connector

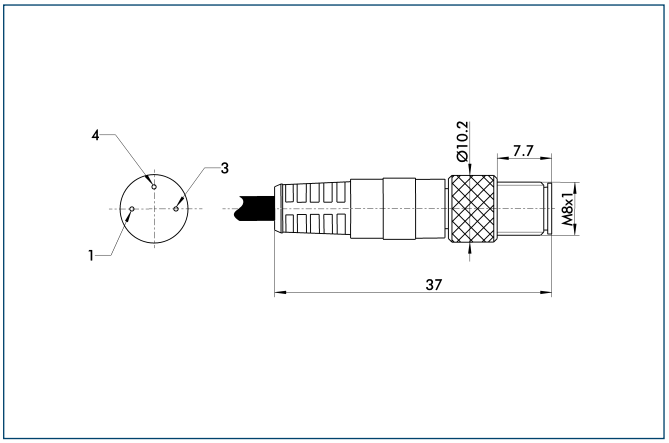


## M12 connector

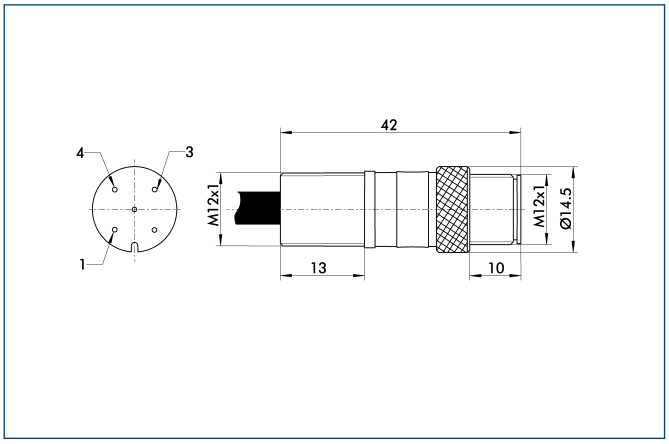



## Wiring diagram closer

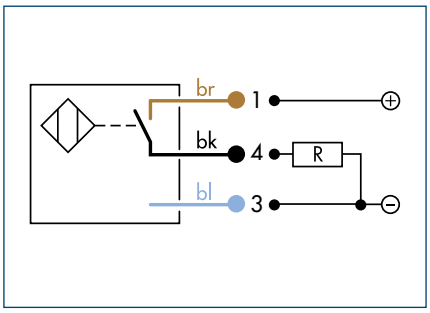


## Wiring diagram opener

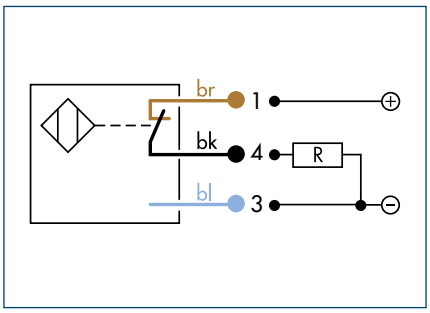


## Technical data

| Description | | IN 40-S-M8 | IN 40-S-M12 | INK 40-S | IN 40-O-M8 | IN 40-O-M12 | INK 40-O | IN 40-S-M5-PNP | IN 40-S-M5-NPN |
|---|---|---|---|---|---|---|---|---|---|
| ID | | 0301474 | 0301574 | 0301555 | 0301484 | 0301584 | 0301556 | 0301491 | 0301492 |
| Switching function | | Closer | Closer | Closer | Opener | Opener | Opener | Closer | Closer |
| Switching distance | [mm] | 0.8 | 0.8 | 0.8 | 0.8 | 0.8 | 0.8 | 0.8 | 0.8 |
| Switching hysterisis from the nominal switching distance | | < 15% | < 15% | < 15% | < 15% | < 15% | < 15% | < 15% | < 15% |
| Type of switching | | PNP | PNP | PNP | PNP | PNP | PNP | PNP | NPN |
| Cable length | [cm] | 30 | 30 | 200 | 30 | 30 | 200 | 30 | 30 |
| Cable connector/cable end | | M8 | M12 | open wires | M8 | M12 | open wires | M5 | M5 |
| Type of voltage | | DC | DC | DC | DC | DC | DC | DC | DC |
| Nominal voltage | [V] | 24 | 24 | 24 | 24 | 24 | 24 | 24 | 24 |
| Min. voltage | [V] | 10 | 10 | 10 | 10 | 10 | 10 | 10 | 10 |
| Max. voltage | [V] | 30 | 30 | 30 | 30 | 30 | 30 | 30 | 30 |
| Power failure | [V] | 1.5 | 1.5 | 1.5 | 1.5 | 1.5 | 1.5 | 1.5 | 1.5 |
| Max. switching current | [A] | 0.2 | 0.2 | 0.2 | 0.2 | 0.2 | 0.2 | 0.2 | 0.2 |
| Min./max. ambient temperature | [°C] | -25/70 | -25/70 | -25/70 | -25/70 | -25/70 | -25/70 | -25/70 | -25/70 |
| Max. switching frequency | [Hz] | 1000 | 1000 | 1000 | 1000 | 1000 | 1000 | 1000 | 1000 |
| Tightness IP (sensor) | | 67 | 67 | 67 | 67 | 67 | 67 | 67 | 67 |
| Tightness IP (sensor plugged) | | 67 | 67 | 67 | 67 | 67 | 67 | 67 | 67 |
| LED display at the sensor | | Yes | Yes | Yes | Yes | Yes | Yes | Yes | Yes |
| Cable diameter | [mm] | 3.5 | 3.5 | 3.5 | 3.5 | 3.5 | 3.5 | 3.5 | 3.5 |
| Min. bending radius (dynamically) | [mm] | 35 | 35 | 35 | 35 | 35 | 35 | 35 | 35 |
| Min. bending radius (statically) | [mm] | 17.5 | 17.5 | 17.5 | 17.5 | 17.5 | 17.5 | 17.5 | 17.5 |
| Number of cores | | 3 | 3 | 3 | 3 | 3 | 3 | 3 | 3 |
| Wire cross section | [mm²] | 0.14 | 0.14 | 0.14 | 0.14 | 0.14 | 0.14 | 0.14 | 0.14 |

## IN 40 sensor

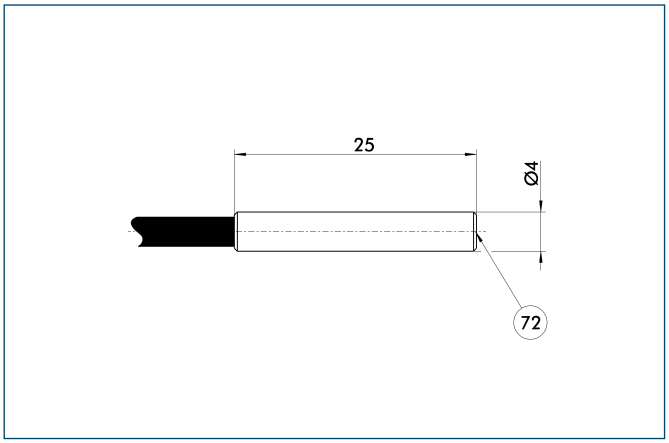


72 Active sensor surface

## M8 connector

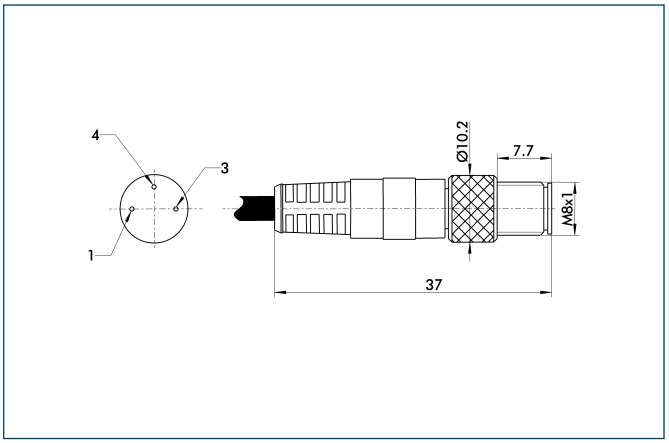


## M12 connector

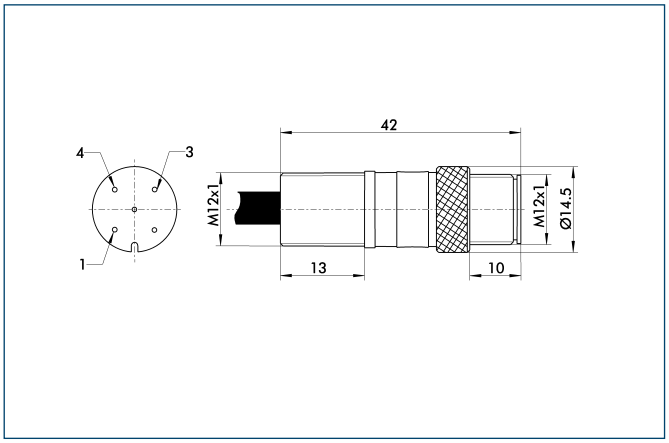

# IN 40-SA





## Wiring diagram closer

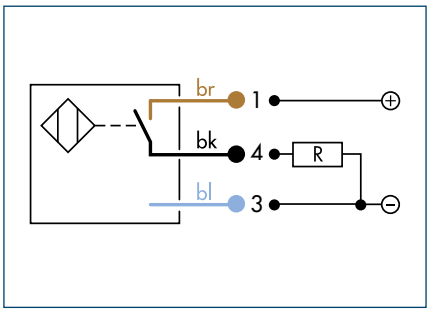


## Wiring diagram opener

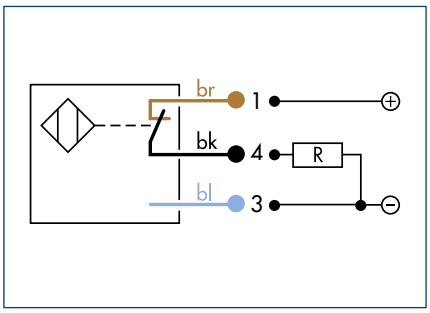


## Technical data

| Description | | IN 40-S-M12-SA | IN 40-S-M8-SA | INK 40-S-SA |
|---|---|---|---|---|
| **ID** | | **0301577** | **0301473** | **0301565** |
| Switching function | | Closer | Closer | Closer |
| Switching distance | [mm] | 0.8 | 0.8 | 0.8 |
| Switching hysterisis from the nominal switching distance | | < 15% | < 15% | < 15% |
| Type of switching | | PNP | PNP | PNP |
| Cable length | [cm] | 30 | 30 | 200 |
| Cable connector/cable end | | M12 | M8 | open wires |
| Type of voltage | | DC | DC | DC |
| Nominal voltage | [V] | 24 | 24 | 24 |
| Min. voltage | [V] | 10 | 10 | 10 |
| Max. voltage | [V] | 30 | 30 | 30 |
| Power failure | [V] | 1.5 | 1.5 | 1.5 |
| Max. switching current | [A] | 0.2 | 0.2 | 0.2 |
| Min./max. ambient temperature | [°C] | -25/70 | -25/70 | -25/70 |
| Max. switching frequency | [Hz] | 1000 | 1000 | 1000 |
| Tightness IP (sensor) | | 67 | 67 | 67 |
| Tightness IP (sensor plugged) | | 67 | 67 | 67 |
| LED display at the sensor | | Yes | Yes | Yes |
| Cable diameter | [mm] | 3.5 | 3.5 | 3.5 |
| Min. bending radius (dynamically) | [mm] | 35 | 35 | 35 |
| Min. bending radius (statically) | [mm] | 17.5 | 17.5 | 17.5 |
| Number of cores | | 3 | 3 | 3 |
| Wire cross section | [mm²] | 0.14 | 0.14 | 0.14 |

## IN 40-SA sensor

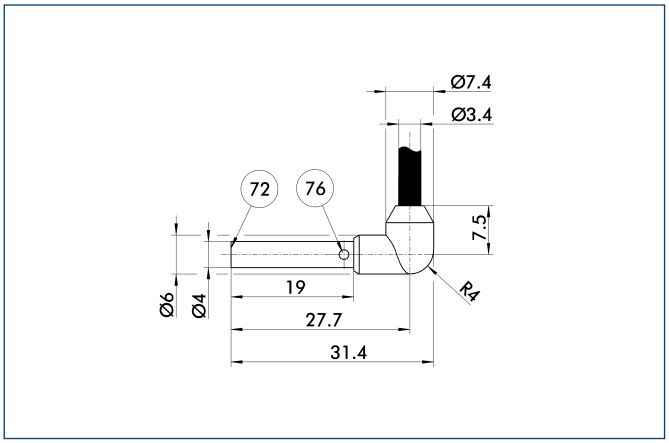


72 Active sensor surface
76 LED

## M8 connector

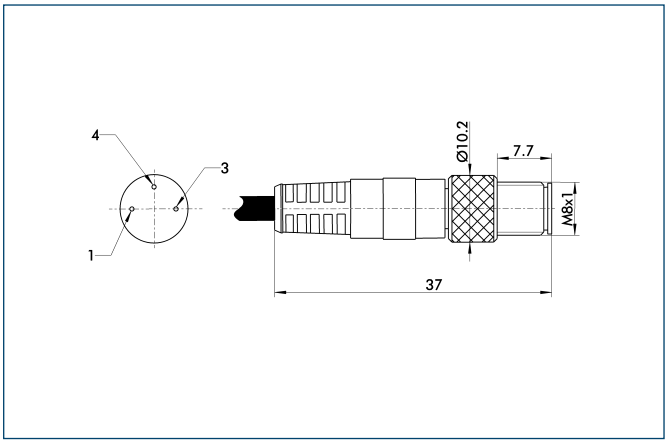


## M12 connector

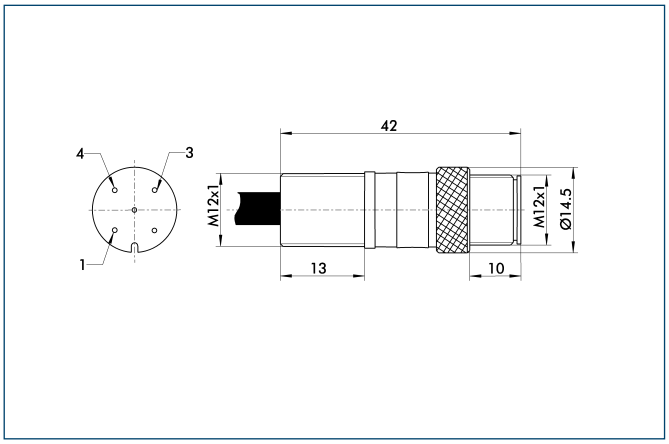



## Wiring diagram closer

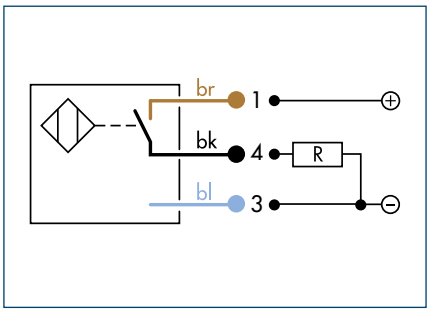


## Technical data

| Description | | IN 60-S-M8 | IN 60-S-M12 | INK 60-S |
|---|---|---|---|---|
| ID | | 0301485 | 0301585 | 0301553 |
| Switching function | | Closer | Closer | Closer |
| Switching distance | [mm] | 1.5 | 1.5 | 1.5 |
| Switching hysterisis from the nominal switching distance | | < 15% | < 15% | < 15% |
| Type of switching | | PNP | PNP | PNP |
| Cable length | [cm] | 30 | 30 | 200 |
| Cable connector/cable end | | M8 | M12 | open wires |
| Type of voltage | | DC | DC | DC |
| Nominal voltage | [V] | 24 | 24 | 24 |
| Min. voltage | [V] | 10 | 10 | 10 |
| Max. voltage | [V] | 30 | 30 | 30 |
| Power failure | [V] | 1.5 | 1.5 | 1.5 |
| Max. switching current | [A] | 0.2 | 0.2 | 0.2 |
| Min./max. ambient temperature | [°C] | -25/70 | -25/70 | -25/70 |
| Max. switching frequency | [Hz] | 1000 | 1000 | 1000 |
| Tightness IP (sensor) | | 67 | 67 | 67 |
| Tightness IP (sensor plugged) | | 67 | 67 | 67 |
| LED display at the sensor | | No | No | No |
| Cable diameter | [mm] | 3.5 | 3.5 | 3.5 |
| Min. bending radius (dynamically) | [mm] | 35 | 35 | 35 |
| Min. bending radius (statically) | [mm] | 17.5 | 17.5 | 17.5 |
| Number of cores | | 3 | 3 | 3 |
| Wire cross section | [mm²] | 0.14 | 0.14 | 0.14 |

## IN 60-S sensor

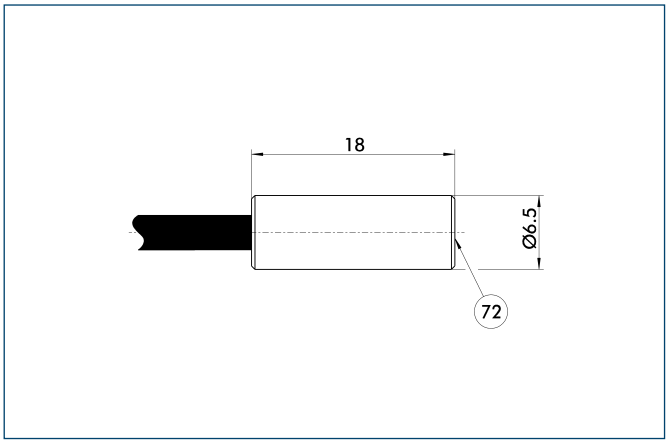


72 Active sensor surface

## M8 connector

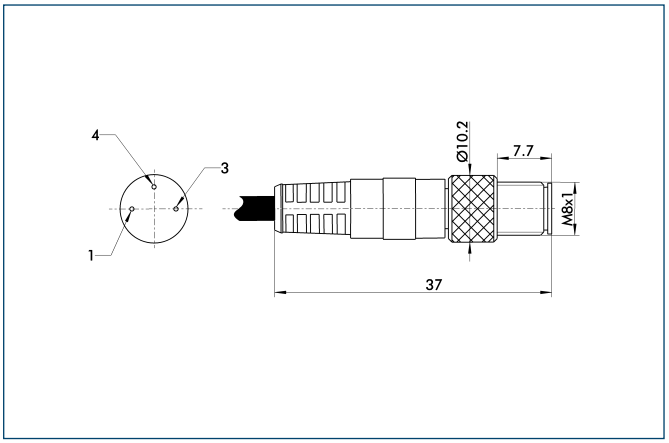


## M12 connector

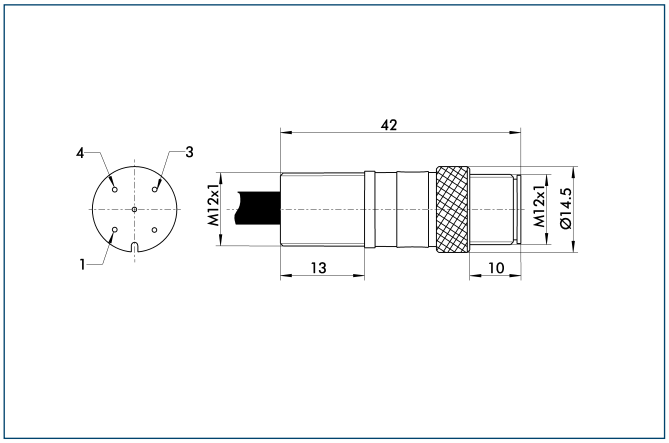



## Wiring diagram closer

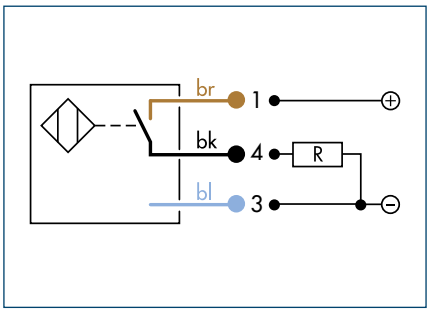


## Technical data

| Description | | IN 65-S-M8 | IN 65-S-M12 | INK 65-S |
|---|---|---|---|---|
| ID | | 0301476 | 0301576 | 0301554 |
| Switching function | | Closer | Closer | Closer |
| Switching distance | [mm] | 1.5 | 1.5 | 1.5 |
| Switching hysterisis from the nominal switching distance | | < 15% | < 15% | < 15% |
| Type of switching | | PNP | PNP | PNP |
| Cable length | [cm] | 30 | 30 | 200 |
| Cable connector/cable end | | M8 | M12 | open wires |
| Type of voltage | | DC | DC | DC |
| Nominal voltage | [V] | 24 | 24 | 24 |
| Min. voltage | [V] | 10 | 10 | 10 |
| Max. voltage | [V] | 30 | 30 | 30 |
| Power failure | [V] | 1.5 | 1.5 | 1.5 |
| Max. switching current | [A] | 0.2 | 0.2 | 0.2 |
| Min./max. ambient temperature | [°C] | -25/70 | -25/70 | -25/70 |
| Max. switching frequency | [Hz] | 1000 | 1000 | 1000 |
| Tightness IP (sensor) | | 67 | 67 | 67 |
| Tightness IP (sensor plugged) | | 67 | 67 | 67 |
| LED display at the sensor | | Yes | Yes | No |
| Cable diameter | [mm] | 3.5 | 3.5 | 3.5 |
| Min. bending radius (dynamically) | [mm] | 35 | 35 | 35 |
| Min. bending radius (statically) | [mm] | 17.5 | 17.5 | 17.5 |
| Number of cores | | 3 | 3 | 3 |
| Wire cross section | [mm²] | 0.14 | 0.14 | 0.14 |

## IN 65-S sensor

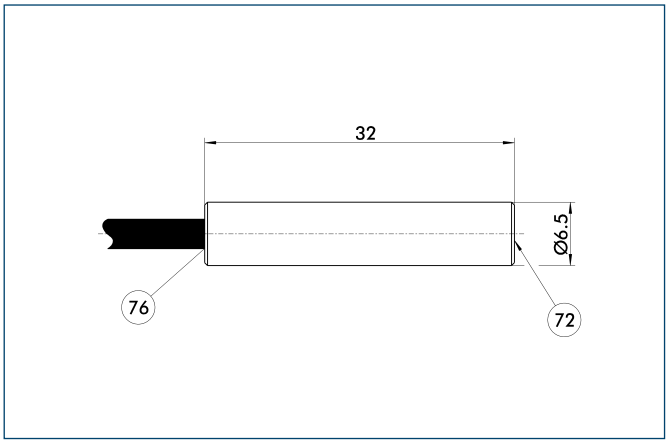


## M8 connector

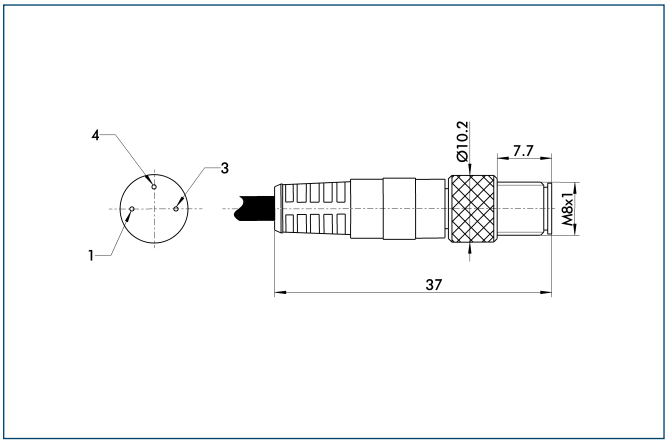


(72) Active sensor surface
(76) LED

## M12 connector

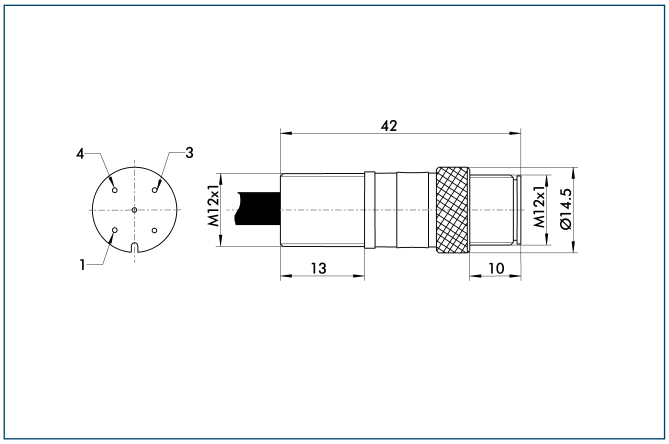



## Wiring diagram closer

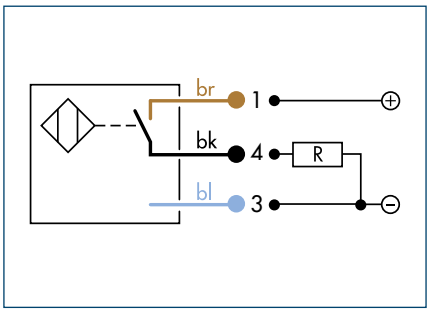


## Wiring diagram opener

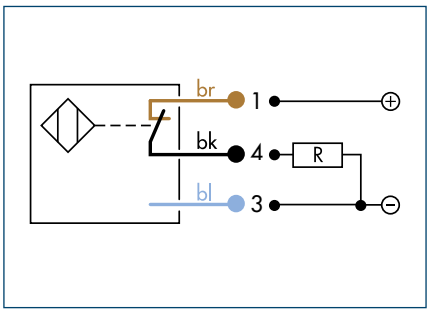


## Technical data

| Description | | IN 80-S-M8 | IN 80-S-M12 | INK 80-S | IN 80-O-M8 | IN 80-O-M12 | INK 80-O |
|---|---|---|---|---|---|---|---|
| ID | | 0301478 | 0301578 | 0301550 | 0301488 | 0301588 | 0301551 |
| Switching function | | Closer | Closer | Closer | Opener | Opener | Opener |
| Switching distance | [mm] | 1.5 | 1.5 | 1.5 | 1.5 | 1.5 | 1.5 |
| Switching hysterisis from the nominal switching distance | | < 15% | < 15% | < 15% | < 15% | < 15% | < 15% |
| Type of switching | | PNP | PNP | PNP | PNP | PNP | PNP |
| Cable length | [cm] | 30 | 30 | 200 | 30 | 30 | 200 |
| Cable connector/cable end | | M8 | M12 | open wires | M8 | M12 | open wires |
| Type of voltage | | DC | DC | DC | DC | DC | DC |
| Nominal voltage | [V] | 24 | 24 | 24 | 24 | 24 | 24 |
| Min. voltage | [V] | 10 | 10 | 10 | 10 | 10 | 10 |
| Max. voltage | [V] | 30 | 30 | 30 | 30 | 30 | 30 |
| Power failure | [V] | 1.5 | 1.5 | 1.5 | 1.5 | 1.5 | 1.5 |
| Max. switching current | [A] | 0.2 | 0.2 | 0.2 | 0.2 | 0.2 | 0.2 |
| Min./max. ambient temperature | [°C] | -25/70 | -25/70 | -25/70 | -25/70 | -25/70 | -25/70 |
| Max. switching frequency | [Hz] | 1000 | 1000 | 1000 | 1000 | 1000 | 1000 |
| Tightness IP (sensor) | | 67 | 67 | 67 | 67 | 67 | 67 |
| Tightness IP (sensor plugged) | | 67 | 67 | 67 | 67 | 67 | 67 |
| LED display at the sensor | | Yes | Yes | Yes | Yes | Yes | Yes |
| Cable diameter | [mm] | 3.5 | 3.5 | 3.5 | 3.5 | 3.5 | 3.5 |
| Min. bending radius (dynamically) | [mm] | 35 | 35 | 35 | 35 | 35 | 35 |
| Min. bending radius (statically) | [mm] | 17.5 | 17.5 | 17.5 | 17.5 | 17.5 | 17.5 |
| Number of cores | | 3 | 3 | 3 | 3 | 3 | 3 |
| Wire cross section | [mm²] | 0.14 | 0.14 | 0.14 | 0.14 | 0.14 | 0.14 |

## IN 80 sensor

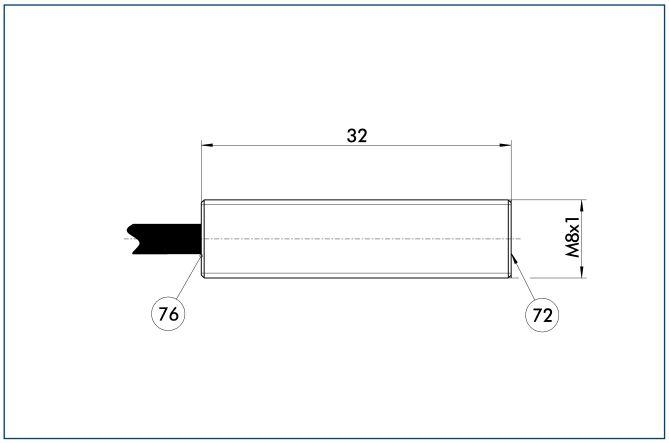


## M8 connector

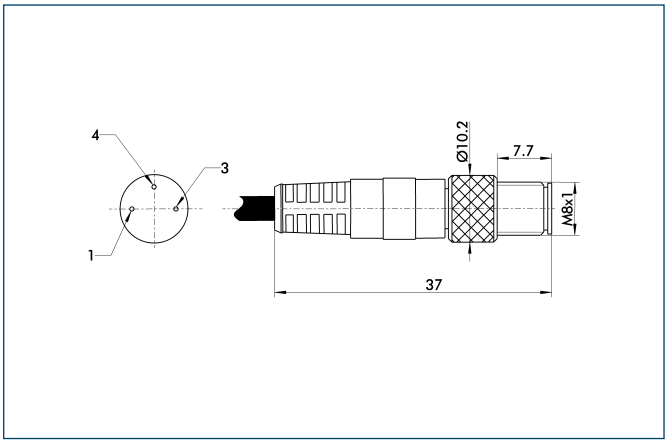


(72) Active sensor surface
(76) LED

## M12 connector

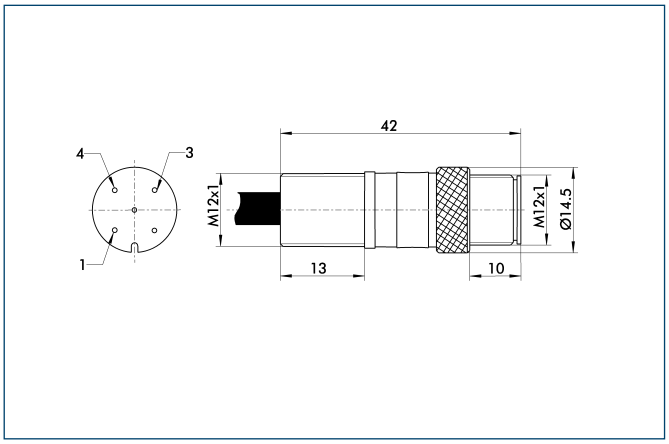



## Wiring diagram closer

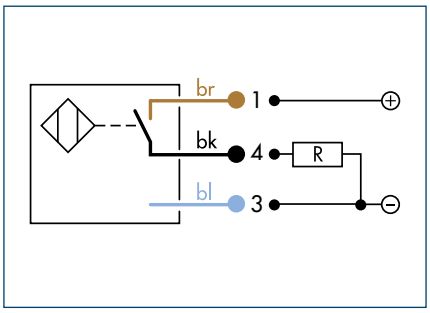


## Wiring diagram opener

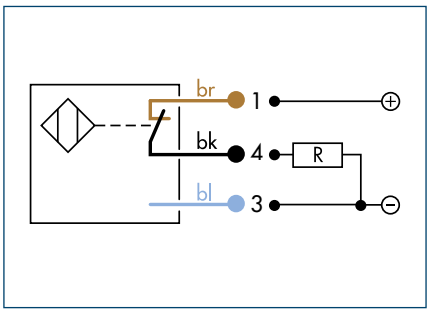


## Technical data

| Description | | IN 80-S-M12-SA | IN 80-S-M8-SA | INK 80-S-SA |
|---|---|---|---|---|
| **ID** | | **0301587** | **0301483** | **0301566** |
| Switching function | | Closer | Closer | Closer |
| Switching distance | [mm] | 1.5 | 1.5 | 1.5 |
| Switching hysterisis from the nominal switching distance | | < 15% | < 15% | < 15% |
| Type of switching | | PNP | PNP | PNP |
| Cable length | [cm] | 30 | 30 | 200 |
| Cable connector/cable end | | M12 | M8 | open wires |
| Type of voltage | | DC | DC | DC |
| Nominal voltage | [V] | 24 | 24 | 24 |
| Min. voltage | [V] | 10 | 10 | 10 |
| Max. voltage | [V] | 30 | 30 | 30 |
| Power failure | [V] | 1.5 | 1.5 | 1.5 |
| Max. switching current | [A] | 0.2 | 0.2 | 0.2 |
| Min./max. ambient temperature | [°C] | -25/70 | -25/70 | -25/70 |
| Max. switching frequency | [Hz] | 1000 | 1000 | 1000 |
| Tightness IP (sensor) | | 67 | 67 | 67 |
| Tightness IP (sensor plugged) | | 67 | 67 | 67 |
| LED display at the sensor | | Yes | Yes | Yes |
| Cable diameter | [mm] | 3.5 | 3.5 | 3.5 |
| Min. bending radius (dynamically) | [mm] | 35 | 35 | 35 |
| Min. bending radius (statically) | [mm] | 17.5 | 17.5 | 17.5 |
| Number of cores | | 3 | 3 | 3 |
| Wire cross section | [mm²] | 0.14 | 0.14 | 0.14 |

## IN 80-SA sensor

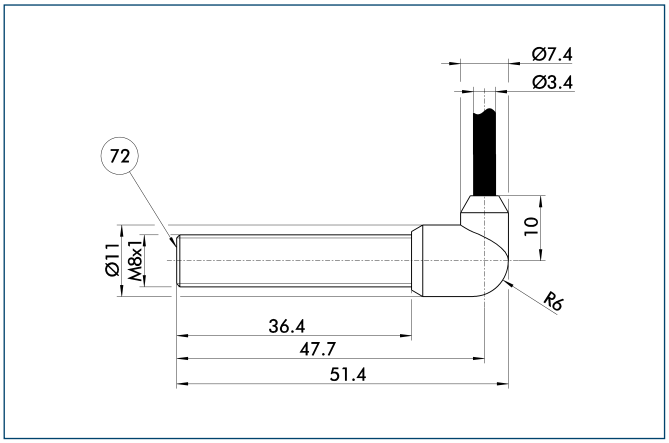


72 Active sensor surface

## M8 connector

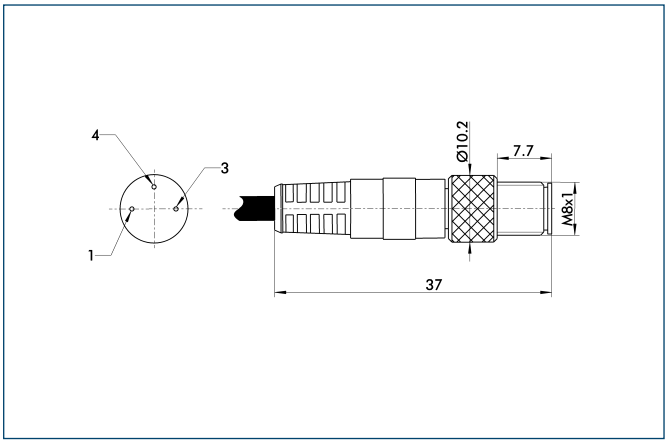


## M12 connector

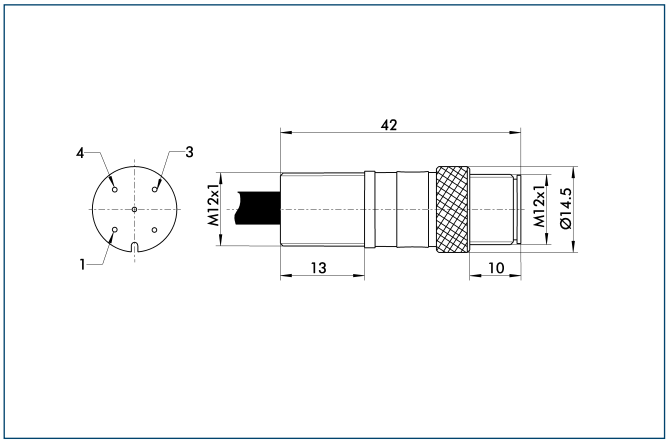

# IN C-80/80SL





## Wiring diagram closer

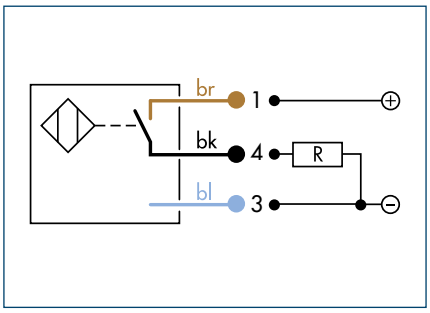


## Technical data

| Description | | IN-B 80-S-M12 | IN-C 80-S-M8 | IN 80-SL-M12 | INK 80-SL |
|---|---|---|---|---|---|
| ID | | 0301479 | 0301475 | 0301529 | 0301579 |
| Switching function | | Closer | Closer | Closer | Closer |
| Switching distance | [mm] | 1.5 | 1.5 | 3 | 3 |
| Switching hysterisis from the nominal switching distance | | < 15% | < 15% | < 15% | < 15% |
| Type of switching | | PNP | PNP | PNP | PNP |
| Cable length | [cm] | | | 30 | 200 |
| Cable connector/cable end | | M12 | M8 | M12 | open wires |
| Type of voltage | | DC | DC | DC | DC |
| Nominal voltage | [V] | 24 | 24 | 24 | 24 |
| Min. voltage | [V] | 10 | 10 | 10 | 10 |
| Max. voltage | [V] | 30 | 30 | 30 | 30 |
| Power failure | [V] | 2.5 | 2.5 | 2.5 | 2.5 |
| Max. switching current | [A] | 0.2 | 0.1 | 0.2 | 0.2 |
| Min./max. ambient temperature | [°C] | -25/70 | -25/70 | -25/70 | -25/70 |
| Max. switching frequency | [Hz] | 1500 | 3000 | 1000 | 1000 |
| Tightness IP (sensor) | | 68 | 68 | 67 | 67 |
| Tightness IP (sensor plugged) | | 68 | 68 | 67 | 67 |
| LED display at the sensor | | Yes | Yes | Yes | Yes |
| Cable diameter | [mm] | 3.5 | 3.5 | 3.5 | 3.5 |
| Min. bending radius (dynamically) | [mm] | 35 | 35 | 35 | 35 |
| Min. bending radius (statically) | [mm] | 17.5 | 17.5 | 17.5 | 17.5 |
| Number of cores | | 3 | 3 | 3 | 3 |
| Wire cross section | [mm²] | 0.14 | 0.14 | 0.14 | 0.14 |

## IN-C 80-S-M8 sensor

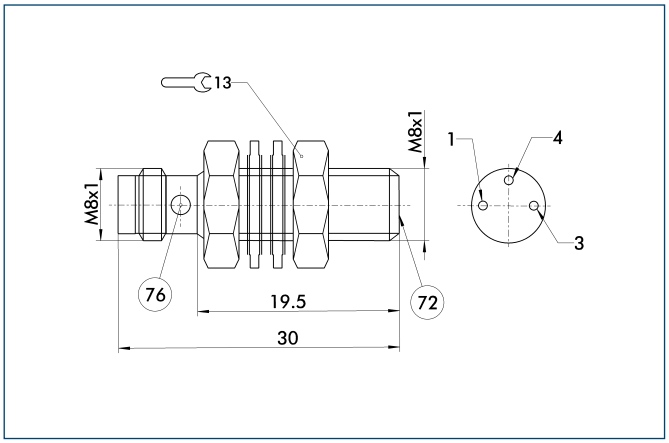


(72) Active sensor surface
(76) LED

## IN-B 80-S-M12 sensor

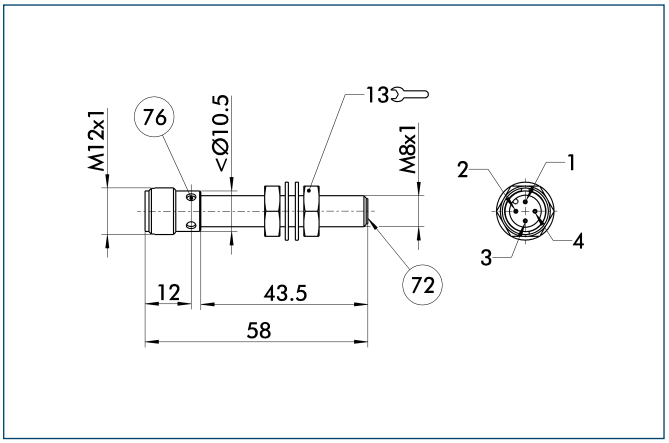


(72) Active sensor surface
(76) LED

## IN 80-SL sensor

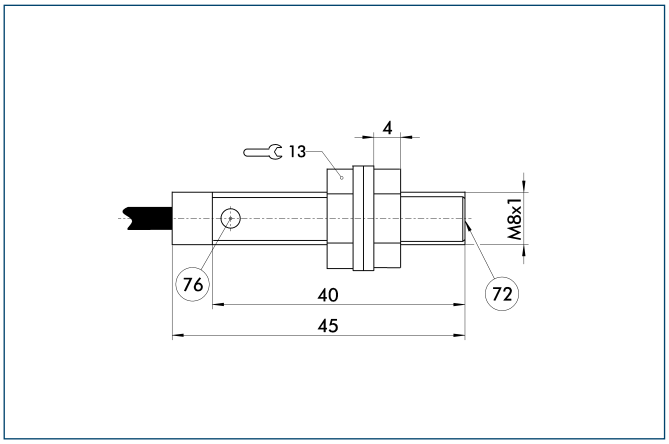


(72) Active sensor surface
(76) LED

## M12 connector

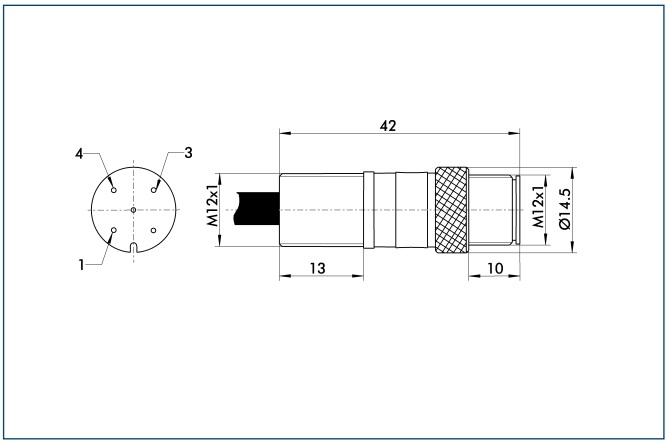



## Wiring diagram closer

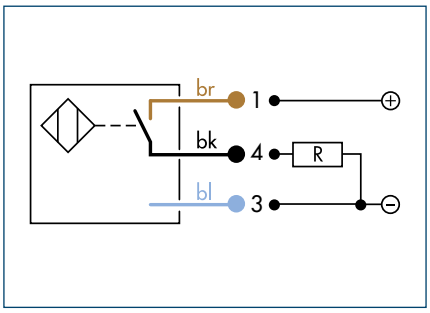


## Technical data

| Description | | IN 120-S-M12 | INK 120-S |
|---|---|---|---|
| ID | | 0301592 | 0301562 |
| Switching function | | Closer | Closer |
| Switching distance | [mm] | 2 | 2 |
| Switching hysterisis from the nominal switching distance | | < 15% | < 15% |
| Type of switching | | PNP | PNP |
| Cable length | [cm] | 30 | 200 |
| Cable connector/cable end | | M12 | open wires |
| Type of voltage | | DC | DC |
| Nominal voltage | [V] | 24 | 24 |
| Min. voltage | [V] | 10 | 10 |
| Max. voltage | [V] | 30 | 30 |
| Power failure | [V] | 1.5 | 1.5 |
| Max. switching current | [A] | 0.2 | 0.2 |
| Min./max. ambient temperature | [°C] | -25/70 | -25/70 |
| Max. switching frequency | [Hz] | 1000 | 1000 |
| Tightness IP (sensor) | | 67 | 67 |
| Tightness IP (sensor plugged) | | 67 | 67 |
| LED display at the sensor | | No | No |
| Cable diameter | [mm] | 3.5 | 3.5 |
| Min. bending radius (dynamically) | [mm] | 35 | 35 |
| Min. bending radius (statically) | [mm] | 17.5 | 17.5 |
| Number of cores | | 3 | 3 |
| Wire cross section | [mm²] | 0.14 | 0.14 |

## IN 120-S sensor

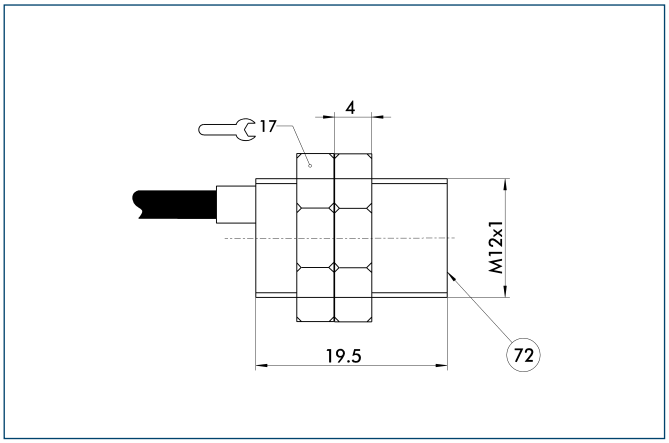


(72) Active sensor surface

## M12 connector

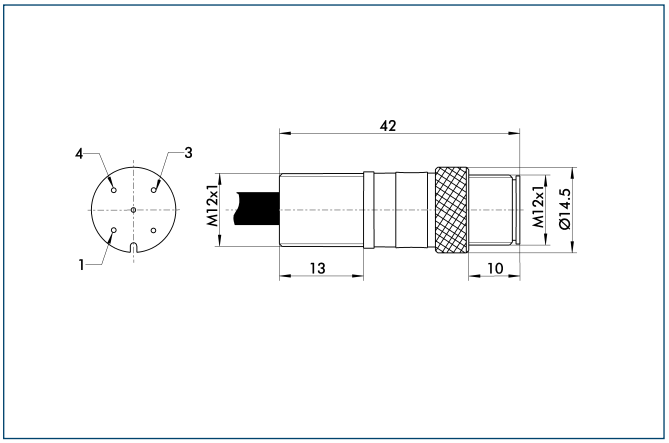

# Magnetic Switch MMS-P



## Programmable magnetic switch

Magnetic switches are used for monitoring the position of automation components. They detect the approach of a magnet without contact and, above a certain switching threshold, enable their output.

## Application example



## Functional description

One switch detects the two conditions “open” and “closed” - Therefore the costs for one switch can be saved.
In contrast to conventional solutions, the switching point of the sensor is taught by pushing the button at the current piston position.
If the automatically determined standard switching hysterisis should be optimized, it can be newly programmed.

## Your advantages and benefits

**Installation into the sensor groove**
for space-saving, easy and fast assembly

**Very flexible cable in PUR-version**
for a long service lifetime and resistance against many chemicals

**Version with plug connectors**
for an easy and fast exchangeability of the extension cable

**A programmable C-slot switch**
for two switching points

**Programmable switching off hysterisis**
for exact postions

**Version with LED-display**
for control of the switching status directly at the sensor

## Sectional diagram

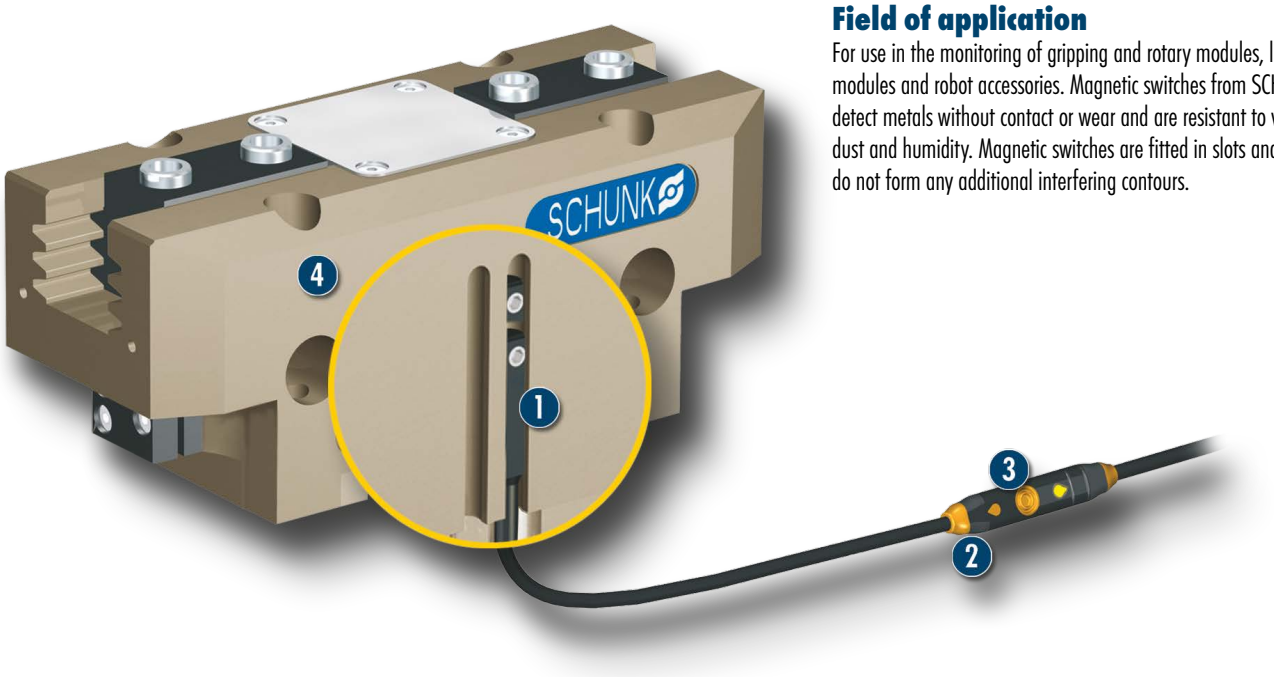


1 Sensor of the MMS-P 22
2 Electronic of the MMS-P 22
3 Key button for programming
4 Actuator with preset stop

## Field of application

For use in the monitoring of gripping and rotary modules, linear modules and robot accessories. Magnetic switches from SCHUNK detect metals without contact or wear and are resistant to vibration, dust and humidity. Magnetic switches are fitted in slots and therefore do not form any additional interfering contours.

## General note to the series

SCHUNK gripping modules, rotary actuators and linear modules, as well as robot accessories should be monitored with the suitable sensors from SCHUNK, since everything is adjusted to each other.
Adjustment of sensor and product is characterized by the interplay of the parameter type and strength of the magnet, clearance, wall thickness and wall material between magnet and sensor, and by alignment and sensitivity of the sensor.

Sensors of other manufacturers which are integrated into SCHUNK products, seldom provide excellent switching results. Moreover, we cannot guarantee proper function or functional safety of them.

## General information

**Housing material**
PA

**Material of the cable coating**
PUR

**Mounting**
clamped in the sensor groove, fixed with a socket head screw

**Warranty**
24 months (details, general terms and conditions and operation manuals can be downloaded under www.schunk.com)

## Options and special information

**Protection class as per DIN 40050**
IP67 in plugged position for the use in clean or dusty environments or if contact with water is given. Functionability in case of contact with other mediums (coolant, acids, bases, etc.) is often given, however cannot be guaranteed by SCHUNK

**Power supply**
10 - 30 V DC at < 10 % residual ripple



## Wiring diagram closer

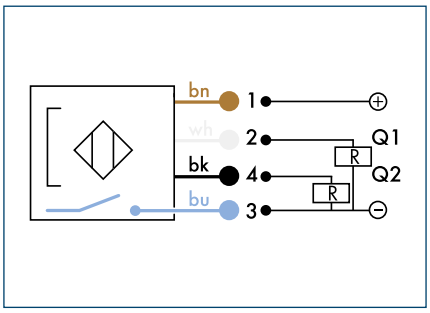


## Technical data

| Description | | MMS-P 22-S-M8-PNP | MMSK-P 22-S-PNP |
|---|---|---|---|
| **ID** | | **0301370** | **0301371** |
| Switching function | | Closer | Closer |
| Type of switching | | PNP | PNP |
| Cable length | [cm] | 30 | 200 |
| Cable connector/ cable end | | M8 | open wires |
| Type of voltage | | DC | DC |
| Nominal voltage | [V] | 24 | 24 |
| Min. voltage | [V] | 10 | 10 |
| Max. voltage | [V] | 30 | 30 |
| Power failure | [V] | 2.2 | 2.2 |
| Max. switching current | [A] | 0.15 | 0.15 |
| Min./max. ambient temperature | [°C] | -5/55 | -5/55 |
| Max. switching frequency | [Hz] | 1000 | 1000 |
| Typical switching time | [s] | 0.001 | 0.001 |
| Tightness IP (sensor) | | 67 | 67 |
| Tightness IP (sensor plugged) | | 67 | 67 |
| LED displac at the sensor | | Yes | Yes |
| Cable diameter | [mm] | 2.6 | 2.6 |
| Min. bending radius (dynamically) | [mm] | 39 | 39 |
| Min. bending radius (statically) | [mm] | 26 | 26 |
| Number of cores | | 4 | 4 |
| Wire cross section | [mm²] | 0.08 | 0.08 |

## MMS-P 22 sensor

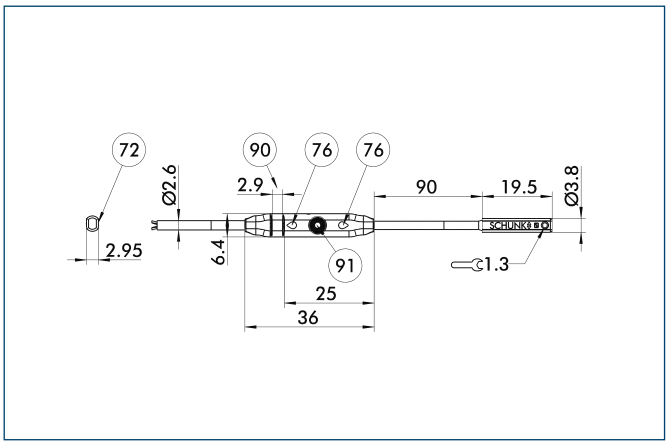


72 Active sensor surface
76 LED
90 Rib for cable connector
91 Key button

## M8 4PIN Trapez connector

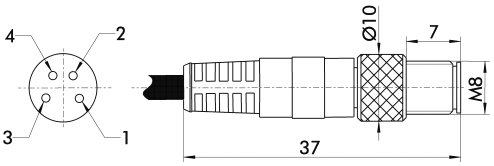

## Magnetic Switches

Magnetic switches are used for monitoring the position of automation components. They detect the approach of a magnet without contact and, above a certain switching threshold, enable their output.




## Function description

Magnetic switches react to magnetic fields. The resistors in the sensor consist of several ferromagnetic and non-magnetic layers. Two shielded and two non-shielded resistors are combined in a bridge circuit, which produces a signal proportional to the magnetic field when one is present. Above a threshold value, an output signal is switched via a comparator, and the sensor reacts.

## Your advantages and benefits

**Installation in the sensor slot**
for space-saving, simple and fast assembly

**Version with LED display**
for checking the switching position directly at the sensor

**Version with connector**
for easy, rapid replacement of the extension cable

**Ultra-flexible PUR cable**
for a long life and resistance to many chemicals

## Application example

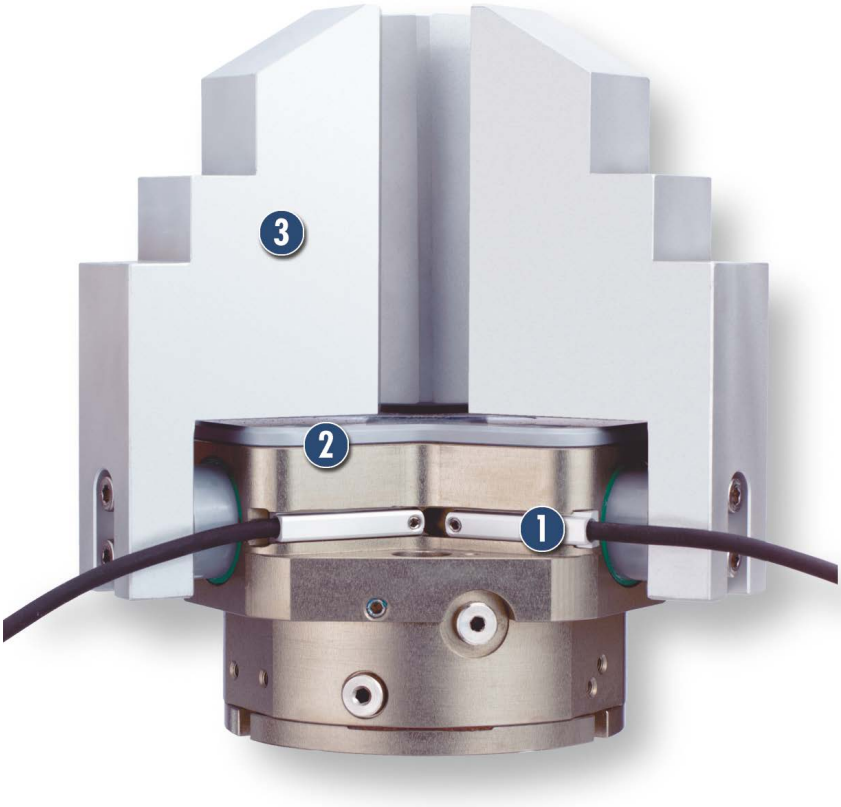


1 MMS Electronic Magnetic Switches for mounting in the C-slot of the gripper

2 Sealed 3-Finger Centric Gripper

3 Workpiece-specific Gripper Fingers

## Area of application

For use in the monitoring of gripping and rotary modules, linear modules and robot accessories. Magnetic switches from SCHUNK detect metals without contact or wear and are resistant to vibration, dust and humidity. Magnetic switches are fitted in slots and therefore do not form any additional interfering contours.

## General information

### Material

Sensor housing: PA in the MMS 22, aluminum in the MMS 30; Cable: with PUR sheath

### Fastening

Clamps in the sensor slot

### Protection class according to DIN 40050

IP 67 in connected condition for use in clean or dusty environments or in the event of contact with water. Contact with other media (cooling lubricants, acidic or caustic substances, etc.) frequently does not impair the function, but this cannot be guaranteed by SCHUNK.

### Voltage

10 – 30 V DC at < 10 % residual ripple

### Switching method

PNP switching / NPN switching

### Warranty

24 months (details, general terms and conditions and operating manuals can be downloaded under www.schunk.com)

## Notes

SCHUNK gripper, rotary and linear modules and robot accessory components that are to be monitored with electromagnetic slot-fitted switches can generally only be reliably monitored with the appropriate electromagnetic switches from SCHUNK.

Sensors and products are matched on the basis of the relationships between the parameters type and field strength of the magnet, distance, wall thickness and wall material of the magnet and the sensor, and the orientation and sensitivity of the sensor itself.

For this reason, sensors from other manufacturers employed in SCHUNK products rarely give satisfactory switching results.



## Circuit diagram of PNP closer

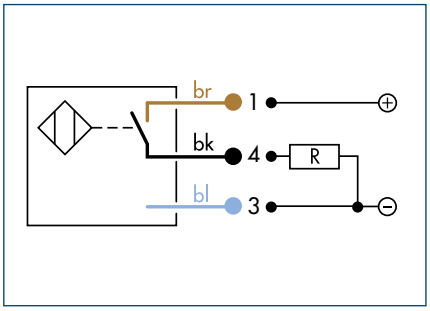


## Circuit diagram of NPN closer

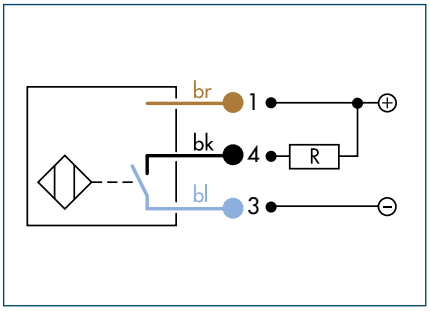


## Technical data

| Description | | MMS 22-S-M5-PNP | MMS 22-S-M5-NPN | MMS 22-S-M8-PNP | MMS 22-S-M8-NPN | MMSK 22-S-PNP | MMSK 22-S-NPN |
|---|---|---|---|---|---|---|---|
| **ID** | | **0301438** | **0301439** | **0301432** | **0301433** | **0301434** | **0301435** |
| Switching function | | Closer | Closer | Closer | Closer | Closer | Closer |
| Switching method | | PNP | NPN | PNP | NPN | PNP | NPN |
| Cable length | [cm] | 30.0 | 30.0 | 30.0 | 30.0 | 200.0 | 200.0 |
| Cable connector/cable end | | M5 | M5 | M8 | M8 | Open wire | Open wire |
| Type of voltage | | DC | DC | DC | DC | DC | DC |
| Nominal voltage | [V] | 24.0 | 24.0 | 24.0 | 24.0 | 24.0 | 24.0 |
| Min. voltage | [V] | 10.0 | 10.0 | 10.0 | 10.0 | 10.0 | 10.0 |
| Max. voltage | [V] | 30.0 | 30.0 | 30.0 | 30.0 | 30.0 | 30.0 |
| Voltage drop | [V] | 1.5 | 1.5 | 1.5 | 1.5 | 1.5 | 1.5 |
| Max. power on contact | [A] | 0.2 | 0.2 | 0.2 | 0.2 | 0.2 | 0.2 |
| Min. ambient temperature | [°C] | -10.0 | -10.0 | -10.0 | -10.0 | -10.0 | -10.0 |
| Max. ambient temperature | [°C] | 70.0 | 70.0 | 70.0 | 70.0 | 70.0 | 70.0 |
| Typical switching time | [s] | 0.001 | 0.001 | 0.001 | 0.001 | 0.001 | 0.001 |
| IP class (sensor) | | 67 | 67 | 67 | 67 | 67 | 67 |
| IP class (connector, plugged in) | | 67 | 67 | 67 | 67 | 67 | 67 |
| LED display on sensor | | Yes | Yes | Yes | Yes | Yes | Yes |
| Cable diameter | [mm] | 2.1 | 2.1 | 2.1 | 2.1 | 2.1 | 2.1 |
| Min. bending radius (dynamic) | [mm] | 21.0 | 21.0 | 21.0 | 21.0 | 21.0 | 21.0 |
| Min. bending radius (static) | [mm] | 10.5 | 10.5 | 10.5 | 10.5 | 10.5 | 10.5 |
| No. of wires | | 3 | 3 | 3 | 3 | 3 | 3 |
| Wire cross section | [$mm^2$] | 0.14 | 0.14 | 0.14 | 0.14 | 0.14 | 0.14 |

## MMS 22 sensor

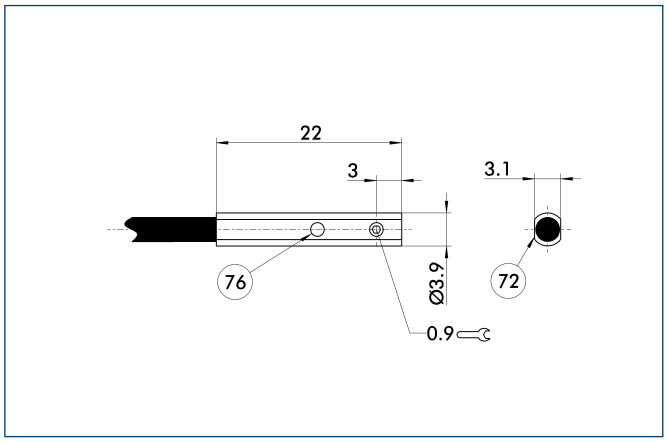


## M5 connector

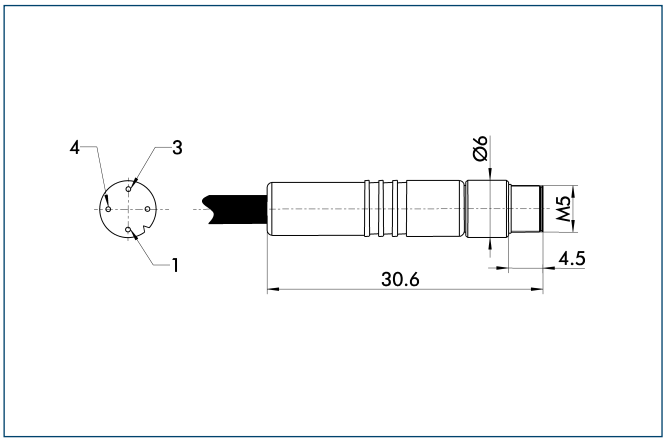


(72) Active sensor surface
(76) LED

## M8 connector

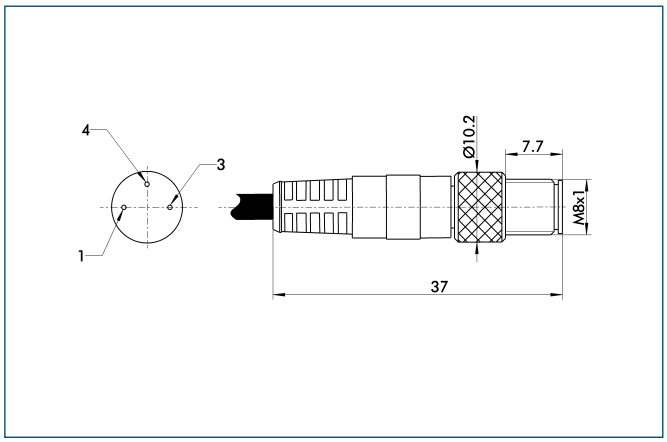

# MMS 22-SA





## Circuit diagram of PNP closer

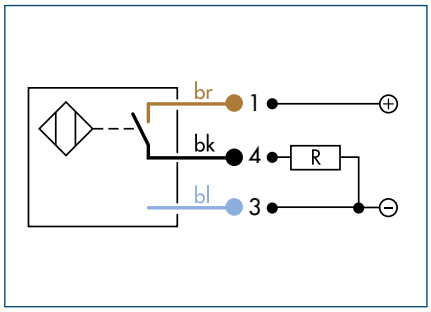


## Circuit diagram of NPN closer

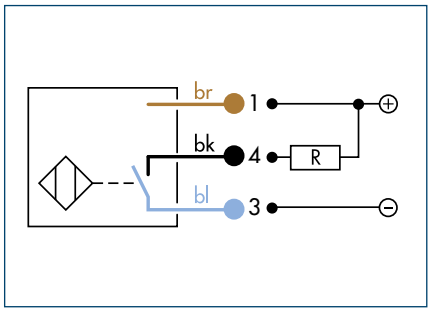


## Technical data

| Description | | MMS 22-S-M5-PNP-SA | MMS 22-S-M5-NPN-SA | MMS 22-S-M8-PNP-SA | MMS 22-S-M8-NPN-SA | MMSK 22-S-PNP-SA | MMSK 22-S-NPN-SA |
|---|---|---|---|---|---|---|---|
| **ID** | | **0301448** | **0301449** | **0301442** | **0301443** | **0301444** | **0301445** |
| Switching function | | Closer | Closer | Closer | Closer | Closer | Closer |
| Switching method | | PNP | NPN | PNP | NPN | PNP | NPN |
| Cable length | [cm] | 30.0 | 30.0 | 30.0 | 30.0 | 200.0 | 200.0 |
| Cable connector/cable end | | M5 | M5 | M8 | M8 | Open wire | Open wire |
| Type of voltage | | DC | DC | DC | DC | DC | DC |
| Nominal voltage | [V] | 24.0 | 24.0 | 24.0 | 24.0 | 24.0 | 24.0 |
| Min. voltage | [V] | 10.0 | 10.0 | 10.0 | 10.0 | 10.0 | 10.0 |
| Max. voltage | [V] | 30.0 | 30.0 | 30.0 | 30.0 | 30.0 | 30.0 |
| Voltage drop | [V] | 1.5 | 1.5 | 1.5 | 1.5 | 1.5 | 1.5 |
| Max. power on contact | [A] | 0.2 | 0.2 | 0.2 | 0.2 | 0.2 | 0.2 |
| Min. ambient temperature | [°C] | -10.0 | -10.0 | -10.0 | -10.0 | -10.0 | -10.0 |
| Max. ambient temperature | [°C] | 70.0 | 70.0 | 70.0 | 70.0 | 70.0 | 70.0 |
| Typical switching time | [s] | 0.001 | 0.001 | 0.001 | 0.001 | 0.001 | 0.001 |
| IP class (sensor) | | 67 | 67 | 67 | 67 | 67 | 67 |
| IP class (connector, plugged in) | | 67 | 67 | 67 | 67 | 67 | 67 |
| LED display on sensor | | Yes | Yes | Yes | Yes | Yes | Yes |
| Cable diameter | [mm] | 2.1 | 2.1 | 2.1 | 2.1 | 2.1 | 2.1 |
| Min. bending radius (dynamic) | [mm] | 21.0 | 21.0 | 21.0 | 21.0 | 21.0 | 21.0 |
| Min. bending radius (static) | [mm] | 10.5 | 10.5 | 10.5 | 10.5 | 10.5 | 10.5 |
| No. of wires | | 3 | 3 | 3 | 3 | 3 | 3 |
| Wire cross section | [mm²] | 0.14 | 0.14 | 0.14 | 0.14 | 0.14 | 0.14 |

## MMS 22-SA sensor

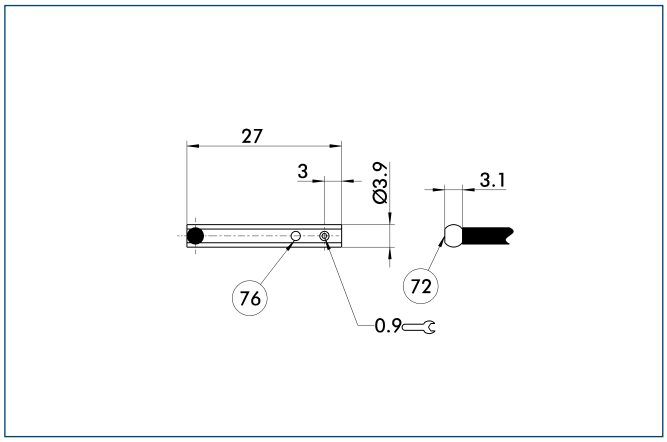


## M5 connector

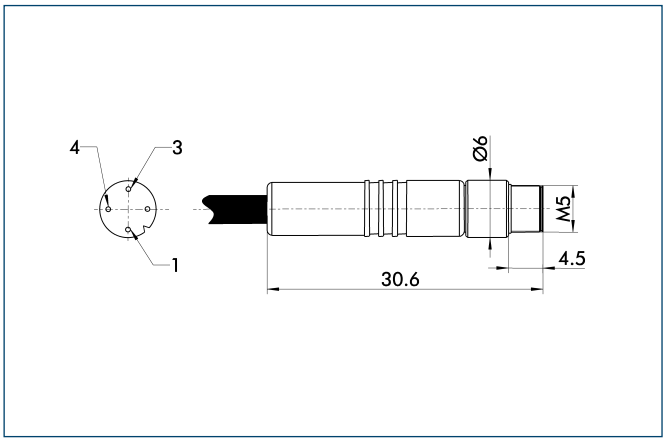


(72) Active sensor surface
(76) LED

## M8 connector

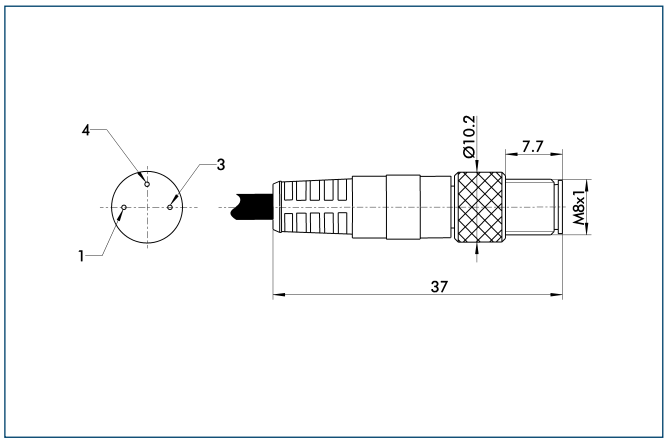



## Circuit diagram of PNP closer

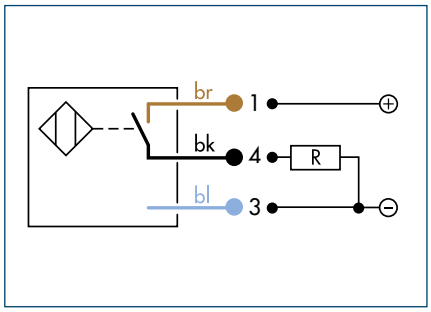


## Technical data

| Description | | MMS 30-S-M8-PNP | MMS 30-S-M12-PNP | MMSK 30-S-PNP |
|---|---|---|---|---|
| **ID** | | **0301471** | **0301571** | **0301563** |
| Switching function | | Closer | Closer | Closer |
| Switching method | | PNP | PNP | PNP |
| Cable length | [cm] | 30.0 | 30.0 | 200.0 |
| Cable connector/cable end | | M8 | M12 | Open wire |
| Type of voltage | | DC | DC | DC |
| Nominal voltage | [V] | 24.0 | 24.0 | 24.0 |
| Min. voltage | [V] | 10.0 | 10.0 | 10.0 |
| Max. voltage | [V] | 30.0 | 30.0 | 30.0 |
| Voltage drop | [V] | 1.5 | 1.5 | 1.5 |
| Max. power on contact | [A] | 0.2 | 0.2 | 0.2 |
| Min. ambient temperature | [°C] | -25.0 | -25.0 | -25.0 |
| Max. ambient temperature | [°C] | 70.0 | 70.0 | 70.0 |
| Typical switching time | [s] | 0.001 | 0.001 | 0.001 |
| IP class (sensor) | | 67 | 67 | 67 |
| IP class (connector, plugged in) | | 67 | 67 | 67 |
| LED display on sensor | | No | No | No |
| Cable diameter | [mm] | 3.5 | 3.5 | 3.5 |
| Min. bending radius (dynamic) | [mm] | 35.0 | 35.0 | 35.0 |
| Min. bending radius (static) | [mm] | 17.5 | 17.5 | 17.5 |
| No. of wires | | 3 | 3 | 3 |
| Wire cross section | [$mm^2$] | 0.14 | 0.14 | 0.14 |

## MMS 30 sensor

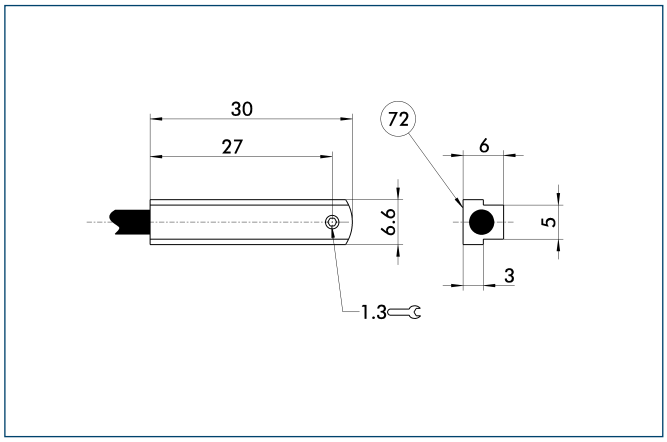


(72) Active sensor surface

## M8 connector

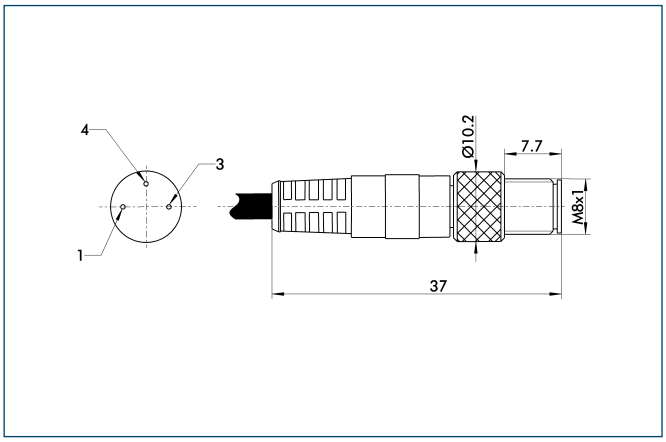


## M12 connector

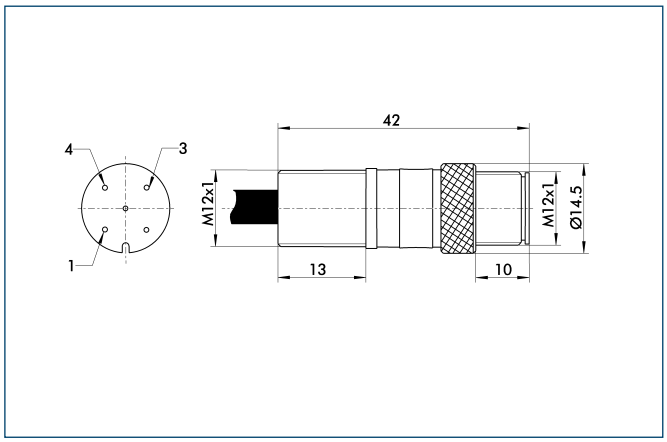



## Circuit diagram of PNP closer

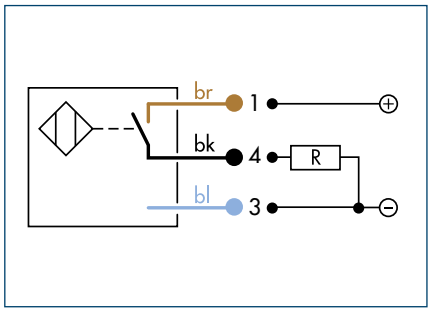


## Circuit diagram of NPN closer

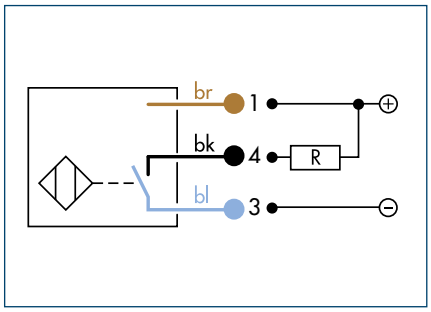


| Description | | MMS-K 65-5-PNP | MMS-K 65-5-NPN |
|---|---|---|---|
| **ID** | | **0301423** | **0301424** |
| Switching function | | Closer | Closer |
| Switching method | | PNP | NPN |
| Cable length | [cm] | 200.0 | 200.0 |
| Type of voltage | | DC | DC |
| Nominal voltage | [V] | 24.0 | 24.0 |
| Min. voltage | [V] | 10.0 | 10.0 |
| Max. voltage | [V] | 30.0 | 30.0 |
| Max. power on contact | [A] | 0.2 | 0.2 |
| Min. ambient temperature | [°C] | -20.0 | -20.0 |
| Max. ambient temperature | [°C] | 70.0 | 70.0 |
| IP class (sensor) | | 67 | 67 |
| IP class (connector, plugged in) | | 67 | 67 |
| No. of wires | | 3 | 3 |
| Wire cross section | [mm²] | 0.14 | 0.14 |

## MMSK 65/S sensor

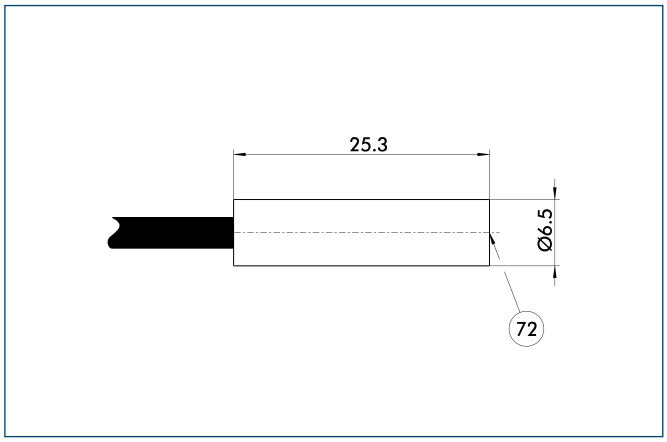


72 Active sensor surface

## Reed Switches

Reed switches are mechanical switches that react to the presence of magnetic fields (magnets). They are frequently used as low-price alternatives to electronic magnetic switches (MMS).



## Function description

Reed switches consist of tiny, metal contacts (reeds). Under the influence of a magnetic field, they bend and touch one another, closing the contact.

## Your advantages and benefits

**Economical**
for cost-saving applications

**Installed in the sensor slot**
for space-saving, simple and fast assembly

**Version with connector**
for easy, rapid replacement of the extension cable

**Ultra-flexible PUR cable**
for a long life and resistance to many chemicals

## Application example

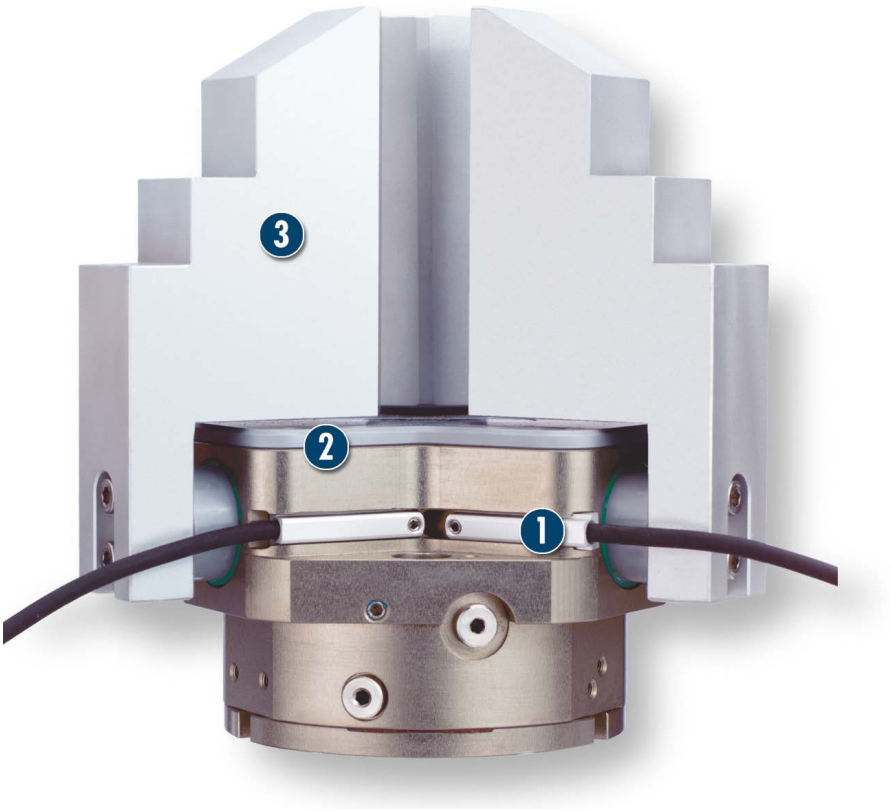


### Area of application

For monitoring of gripping and rotary modules, linear modules and robot accessories. Reed switches from SCHUNK detect metals without contact or wear and are resistant to dust and humidity. Magnetic switches are fitted in slots and therefore do not form any additional interfering contours. Please note that not all SCHUNK products with sensor slot can be monitored using low-cost reed switches.

1 **RMS Reed Switches for mounting in the C-slot of the gripper**

2 **Sealed 3-Finger Centric Gripper**

3 **Workpiece-specific Gripper Fingers**

## General information

### Material

Sensor housing: PA in the RMS 22, stainless steel in the RMS 80
Cable: PUR sheath

### Fastening

Clamps in sensor slot (RMS 22) / brackets (RMS 80)

### Protection class according to DIN 40050

IP 67 in connected condition for use in clean or dusty environments or in the event of contact with water. Contact with other media (cooling lubricants, acidic or caustic substances, etc.) frequently does not impair the function, but this cannot be guaranteed by SCHUNK.

### Warranty

24 months

## Notes

SCHUNK gripper, rotary and linear modules and robot accessory components that are to be monitored by slot-fitted reed switches can generally only be reliably monitored with the appropriate reed switches from SCHUNK. Sensors and products are matched on the basis of the relationships between the parameters type and field strength of the magnet, distance, wall thickness and wall material of the magnet and the sensor, and the orientation and sensitivity of the sensor itself. For this reason, sensors from other manufacturers employed in SCHUNK products rarely give satisfactory switching results.

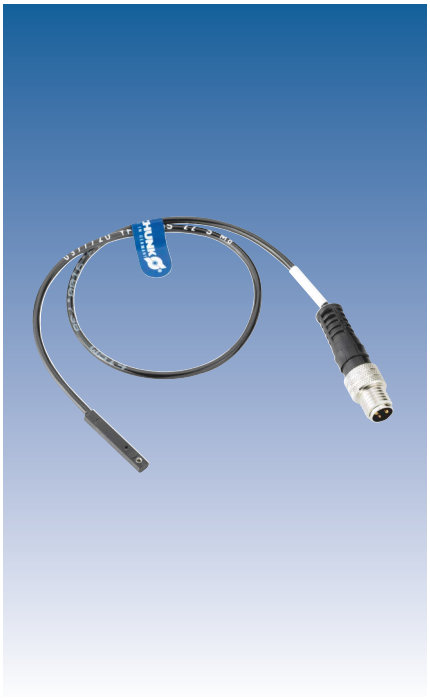

## Circuit diagram of closer

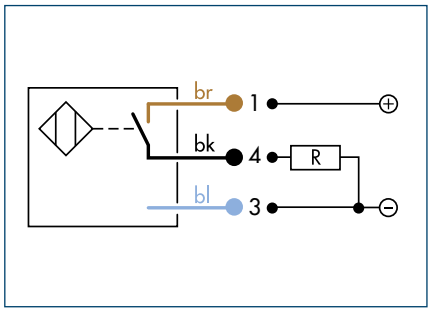


## Technical data

| Description | | RMS 22-S-M8 |
|---|---|---|
| ID | | 0377720 |
| Switching function | | Closer |
| Switching method | | PNP, NPN |
| Cable length | [cm] | 30.0 |
| Cable connector/cable end | | M8 |
| Type of voltage | | DC |
| Max. voltage DC | [V] | 120.0 |
| Voltage drop DC | [V] | 0.0 |
| Max. power on contact DC | [A] | 0.4 |
| Type of voltage | | AC |
| Max. voltage AC | [V] | 120.0 |
| Voltage drop AC | [V] | 0.0 |
| Max. power on contact AC | [A] | 0.4 |
| Min. ambient temperature | [°C] | -5.0 |
| Max. ambient temperature | [°C] | 70.0 |
| Typical switching time | [s] | 0.01 |
| IP class (sensor) | | 67 |
| IP class (connector, plugged in) | | 67 |
| LED display on sensor | | No |
| Cable diameter | [mm] | 2.1 |
| Min. bending radius (dynamic) | [mm] | 21.0 |
| Min. bending radius (static) | [mm] | 10.5 |
| No. of wires | | 2 |
| Wire cross section | [mm²] | 0.14 |

## RMS 22 sensor

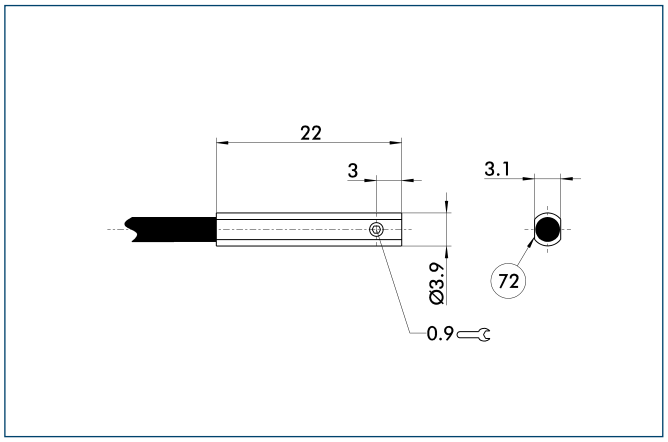


## M8 connector

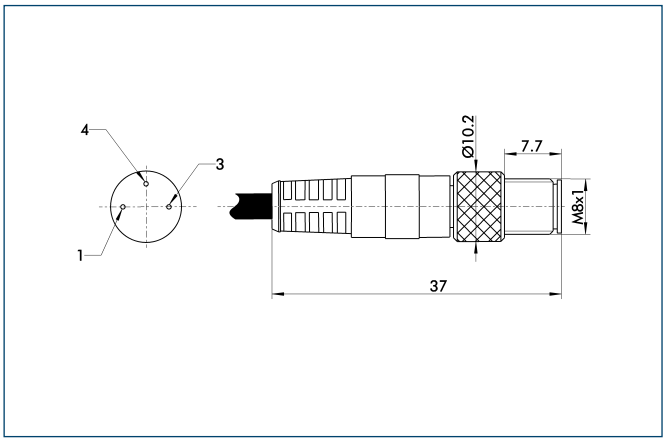


(72) Active sensor surface



## Circuit diagram of closer

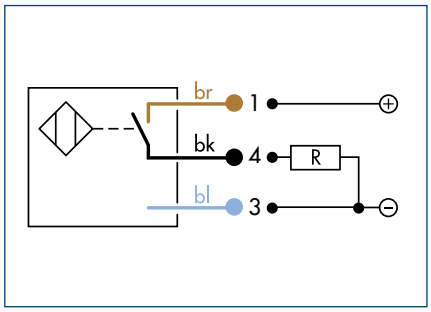


## Technical data

| Description | | RMS 80-S-M8 |
|---|---|---|
| ID | | 0377721 |
| Switching function | | Closer |
| Switching method | | PNP, NPN |
| Cable length | [cm] | 30.0 |
| Cable connector/cable end | | M8 |
| Type of voltage | | DC |
| Max. voltage DC | [V] | 120.0 |
| Voltage drop DC | [V] | 0.0 |
| Max. power on contact DC | [A] | 0.4 |
| Type of voltage | | AC |
| Max. voltage AC | [V] | 120.0 |
| Voltage drop AC | [V] | 0.0 |
| Max. power on contact AC | [A] | 0.4 |
| Min. ambient temperature | [°C] | -5.0 |
| Max. ambient temperature | [°C] | 70.0 |
| Typical switching time | [s] | 0.01 |
| IP class (sensor) | | 67 |
| IP class (connector, plugged in) | | 67 |
| LED display on sensor | | No |
| Cable diameter | [mm] | 2.1 |
| Min. bending radius (dynamic) | [mm] | 21.0 |
| Min. bending radius (static) | [mm] | 10.5 |
| No. of wires | | 2 |
| Wire cross section | [mm²] | 0.14 |

## RMS 80 sensor

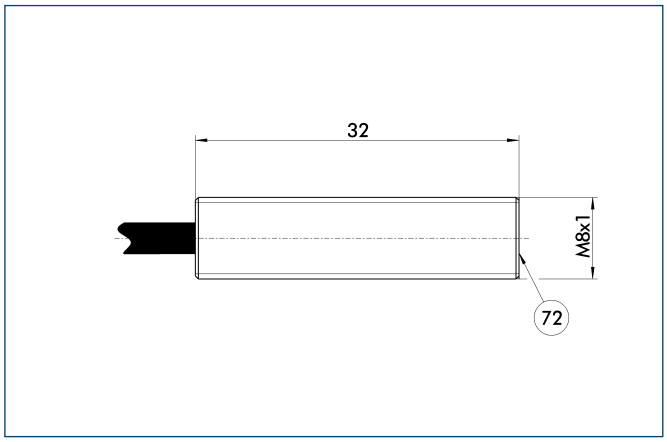


## M8 connector

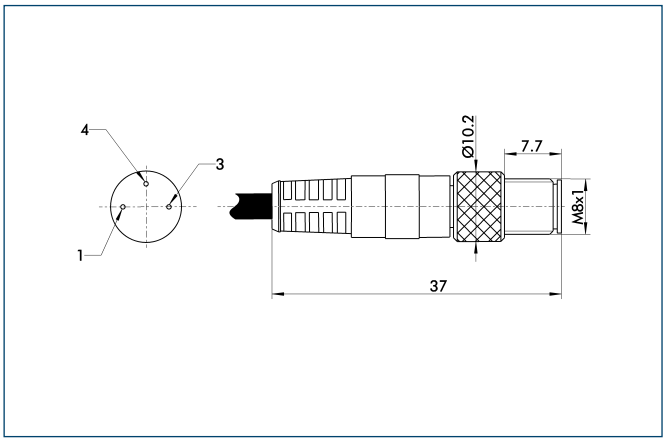


(72) Active sensor surface

# Optical Switch




## Function description

The optical sensor ONS emits light via the optical wave guide ONS-LWL. By analyzing the quantity of reflected light, the ONS can detect positions of the gripper being monitored and set or delete its output based on the programming.

## Your advantages and benefits

**Easy programming**
for short commissioning times

**LED display**
for fast and easy functional checks

**Light optical wave guide**
for low weight on the gripper

## Application example

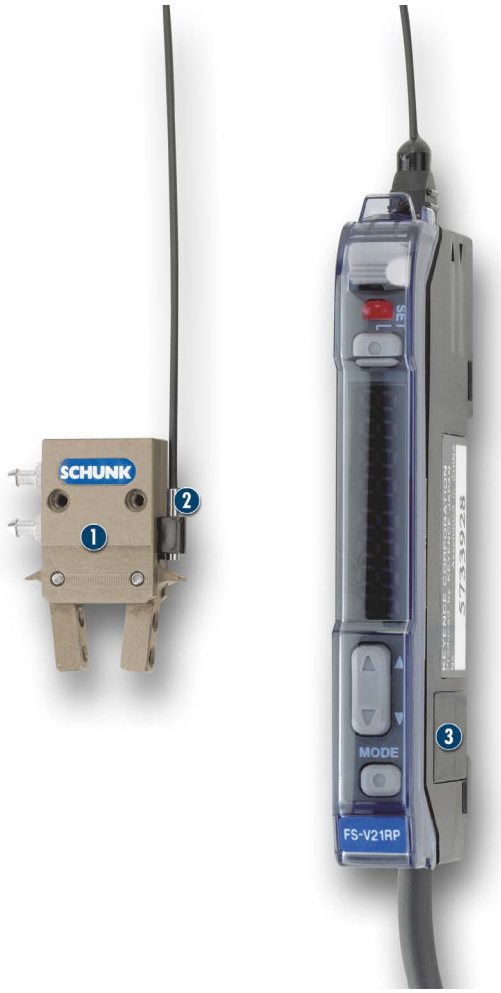


1 Gripper

2 Optical wave guide

3 Force/torque sensor system controller

## Area of application

Use in clean environments in connection with the corresponding SCHUNK grippers.

## General information

**Warranty**
24 months

## Notes

The ONS sensor is attractive due to its low sales price. It is based on the product FS-V31P from Keyence. By specifying the hardware and software, the user friendliness was increased for use with SCHUNK grippers and the functions optimized. For technical details see the operating manual.



## Technical data

| Description | | ONS 01 |
|---|---|---|
| **ID** | | **301390** |
| Voltage supply | | DC |
| Min. voltage | [V] | 12 |
| Max. voltage | [V] | 24 |
| Number of digital switching outputs | | 1 |
| Max. power on contact | [mA] | 100 |
| Min. ambient temperature | [°C] | -10 |
| Max. ambient temperature | [°C] | 55 |
| IP class | | 20 |

| Description | | ONS 01-LWL |
|---|---|---|
| **ID** | | **301391** |
| Cable diameter | [mm] | 1 |
| Diameter of cable end | [mm] | 1.5 |
| Cable length | [m] | 1 |
| Min. bending radius (dynamic) | [mm] | 40 |
| Min. bending radius (static) | [mm] | 30 |

## Main view of the ONS 01

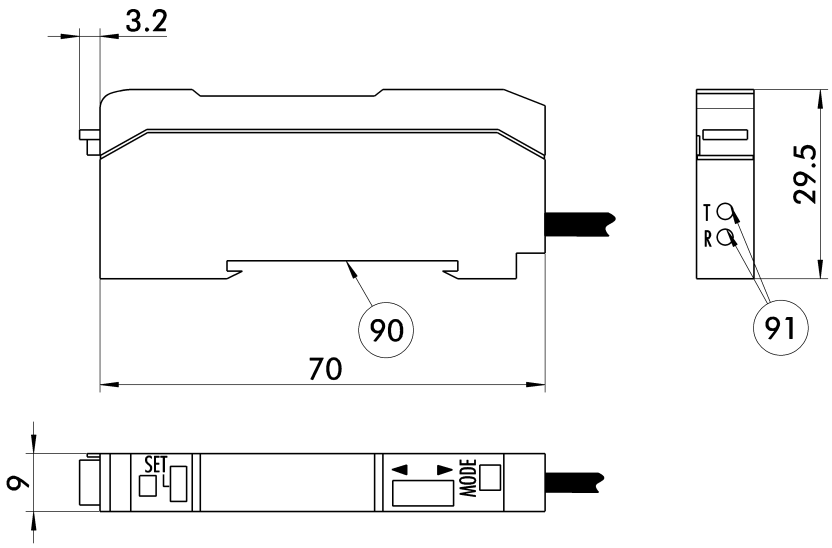


(90) Assembly rail
(91) Connection for sensor

## ONS 01-LWL

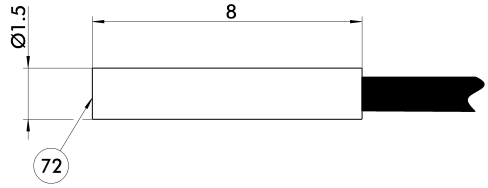


(72) Active sensor surface

ⓘ One optical wave guide ONS 01-LWL is needed for each ONS 01.

## Sensor Tester

The SST sensor tester enables the rapid testing and adjustment of inductive sensors, magnetic switches and reed contacts. The necessary power is supplied by a 9 V compound battery.




## Function description

The sensor is connected to the M8, M12 or terminal connection of the sensor tester and the ON button pressed. The sensor position is displayed visually by LEDs and output acoustically via a signal buzzer.

## Your advantages and benefits

**Visual and acoustic signal**
for simple function checking and adjustment

**For 2- and 3-wire DC technology**
enabling the connection of reed contacts, capacitive and inductive sensors

**Tests possible without dismantling sensors**
for short maintenance times

**Connections for M8 and M12 or open cable ends possible**
ensuring suitability for all SCHUNK sensors

**PNP and NPN sensors can be tested**

**Operating voltage with 9 V compound battery**
for mobile use

**Automatic cut-off function**
for an extended battery life

## Application example

### Area of application

Sensor testing and adjustment of the switching point (sensor calibration)

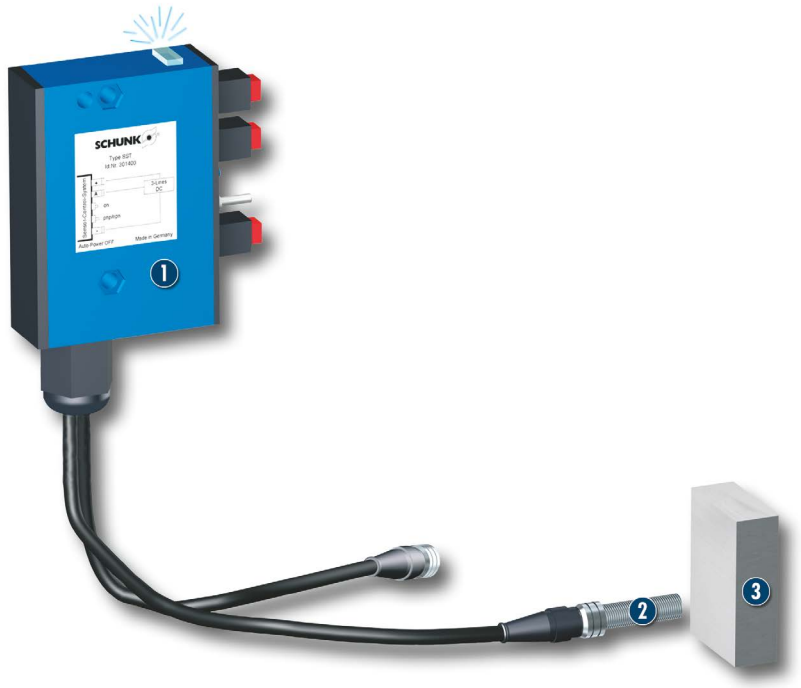


1 Sensor tester SST

2 Inductive proximity switches IN 80

3 Metal plate

## General information

### Scope of delivery

Sensor tester incl. assembly and operating manual with manufacturer's declaration, 9 V compound battery

## Notes

Please note that only one SST input (M8 or M12 or cable terminal input) can be used at once.
If the toggle switch is towards the sticker (nameplate), PNP is selected, if not, NPN.



## Technical data

| Description | SST |
|---|---|
| **ID** | **0301400** |
| Battery | 9 V DC (compound battery Type LR 61) |
| Connection 1 | M12*1 |
| Connection 2 | M8*1 |
| Connection 3 | direct clamping |
| Housing material | plastic |
| IP class | 20 |

## Main view

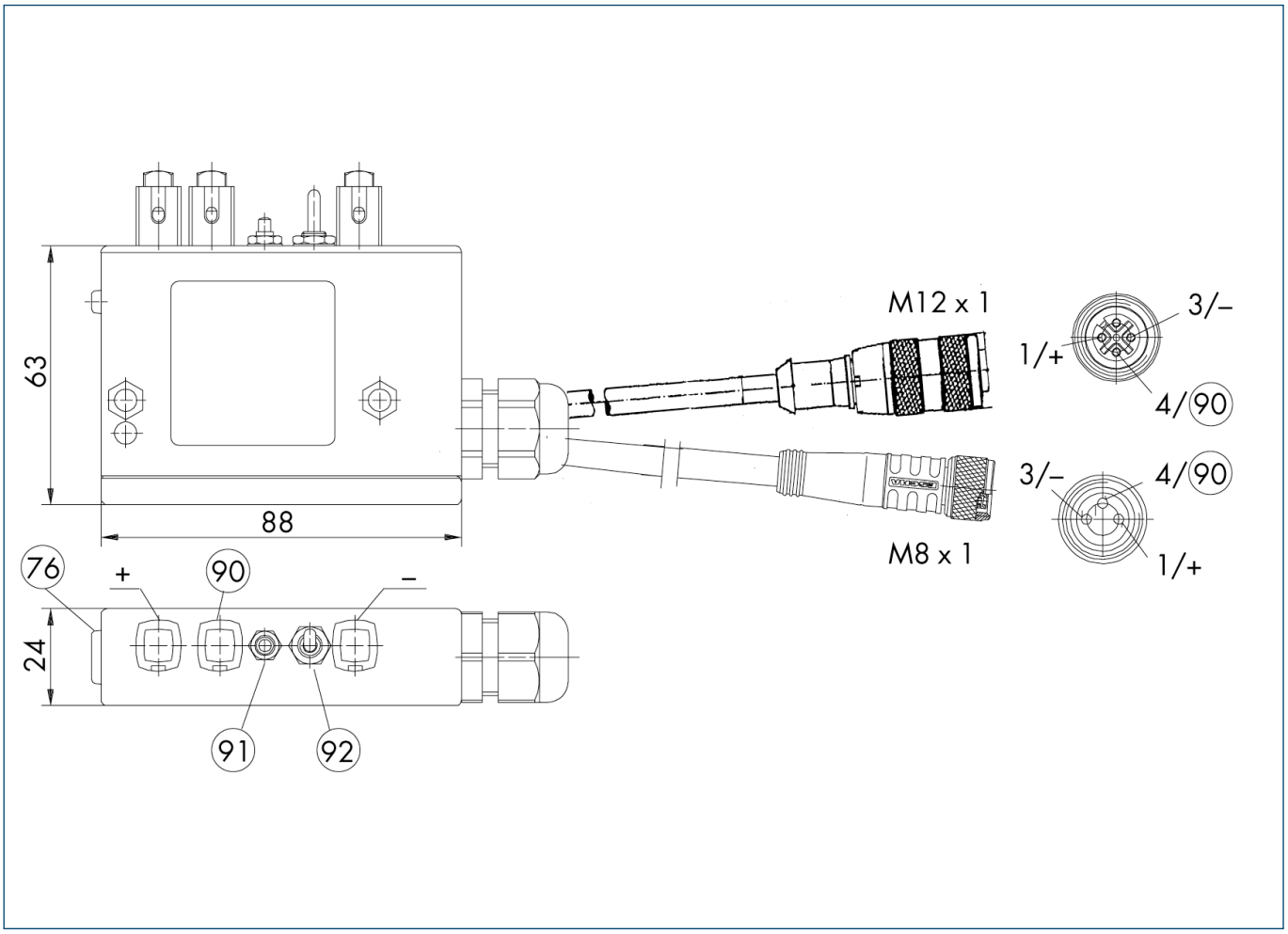


(76) LED
(90) Output
(91) ON button
(92) PNP / NPN changeover switch

## Adjustable housing for proximity switch

The adjustable housings enable the position of the sensor to be set once only. If the sensor is changed, the sensor position is retained.

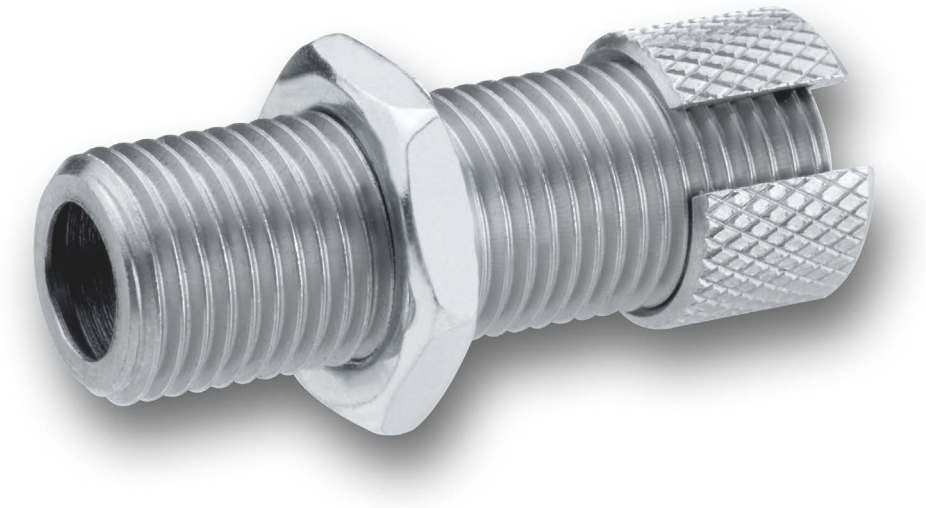

## Function description

The sensor is inserted in the adjustable housing and fastened with the coupling ring. Next, the switching position is set. When the sensor is changed, the adjustable housing remains in the same location – only the sensor is changed by removing the coupling ring.

## Your advantages and benefits

**Setting has to be carried out only once**
for rapid sensor replacement without recalibration

**Corrosion-free material**
for a long service life

**Switches are protected against shocks**
preventing mechanical destruction

## Application example

### Area of application

For universal use in the monitoring of automation modules with proximity switches




1 NHG adjustable housing

2 SRU 63 Flat Rotary Actuator

## General information

**Warranty**
24 months

## Notes

The coupling ring is slotted for fitting onto the cable.



## Technical data

| Description | | NHG 5 | NHG 8 |
|---|---|---|---|
| ID | | 9646006 | 9646007 |
| Suitable sensor Ø | | M5 | M8 |
| Min. sensor length | [mm] | 24.5 | 31.5 |
| Max. sensor length | [mm] | 28.5 | 35.5 |
| Weight | [kg] | 0.006 | 0.008 |
| Material | | Steel | Steel |

## NHG 5

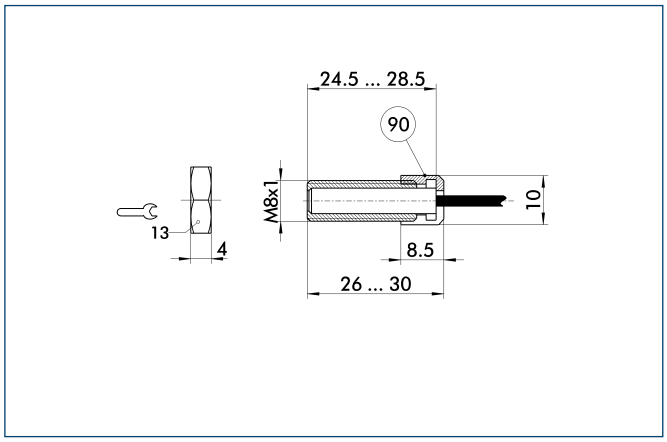


## NHG 5 assembly

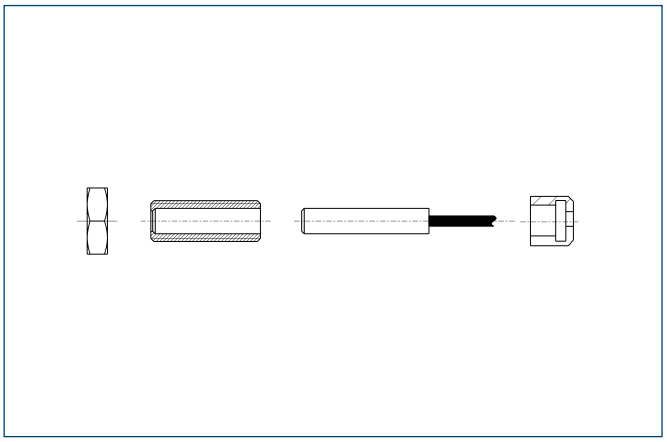

(90) Coupling ring is slotted for fitting onto the cable

## NHG 8

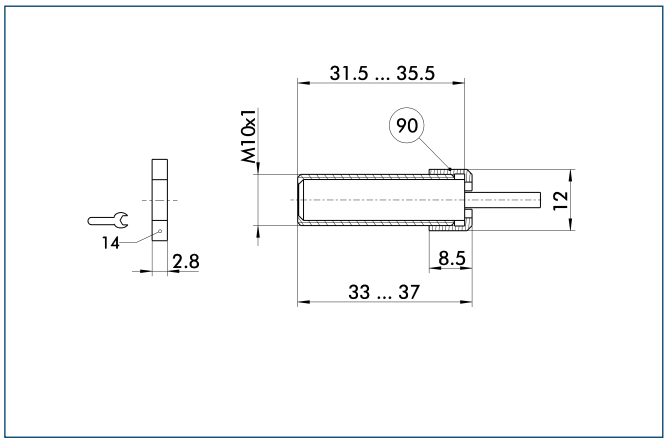


## NHG 8 assembly

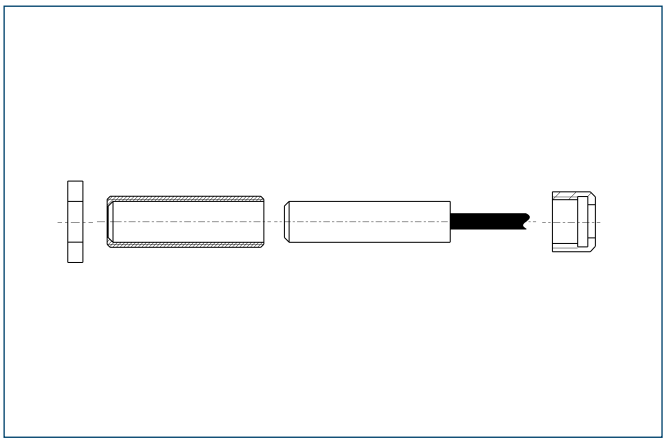

(90) Coupling ring is slotted for fitting onto the cable

## Sensor Distributor

For connecting all SCHUNK sensors and sensor systems (IN/INK/MMS/APS-M1, etc.). In the versions 2 (V2), 4 (V4) and 8 (V8).




## Functional description

Distributors collect incoming signals and forward them in a single cable. This dispenses with unnecessary cables.
The switching position of the closed component can be controlled by the LEDs, which are integrated into the distributor.

## Your advantages and benefits

**Operating display and shift indicator by LED**
for direct control of the switching status

**A feed line**
therefore it is ideal for signal feed through

**Robust PA housing**
for a long service lifetime and resistance against many chemicals

## Application example

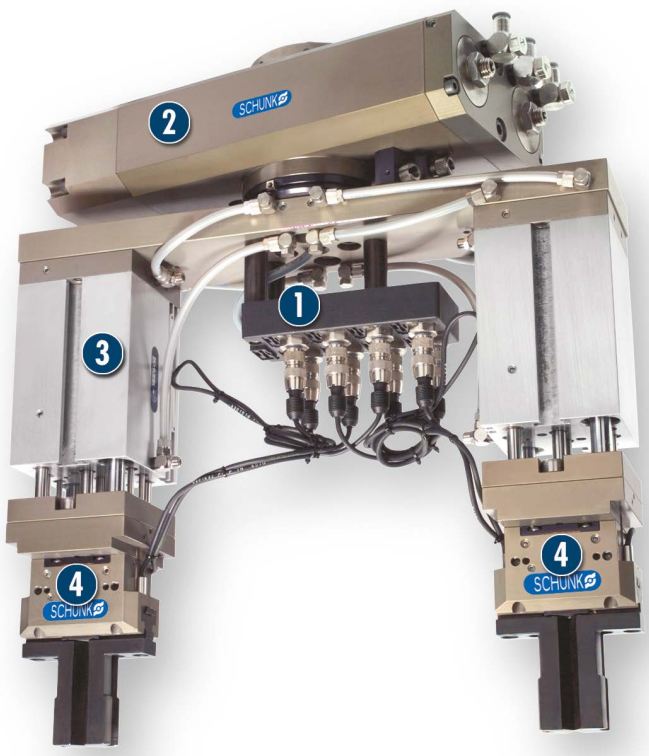


1 V 8 Sensor Distributor

2 Rotary Actuator SRU-plus

3 PHE Stroke Module

4 PGN-plus 2-Finger Parallel Gripper with workpiece-specific gripper fingers

## Field of application

Sensor distributors from SCHUNK are all-rounders, insensitive against vibrations, dust and humidity. They are suitable for applications in clean and dirty environments.

## General note to the series

**Housing material**
PA 6 GF 30, black

**Material of the cable coating**
PUR

**Mounting**
by fastening with screws

**Protection class according to DIN 40050**
IP 67 in plugged condition for the use in clean or dusty environments, or in case of contact with water. Operability in case of contact with other media (coolant, acids, bases, etc.) is often given, however cannot be guaranteed by SCHUNK.

**Scope of delivery**
Complete incl. sealing plugs for sealing unused connections, 1 set of labels

**Warranty**
24 months (details, general terms and conditions and operation manuals can be downloaded under www.schunk.com)

# Y-DISTRIBUTOR





## Technical data

| Description | | V2-M8-4P-2XM8-3P |
|---|---|---|
| ID | | 0301380 |
| Connection socket | | M8 |
| Cable length | [mm] | 37 |
| Nominal voltage | [V] | 30 |
| Max. total current | [A] | 4 |
| Min./max. ambient temperature | [°C] | -25/80 |

## Main view

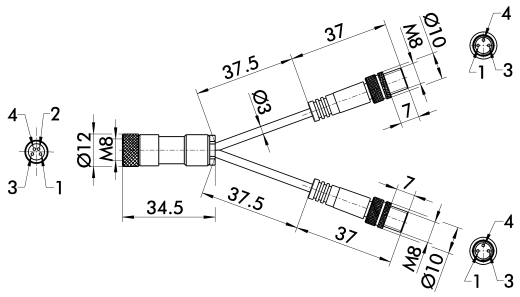


## M8 wiring diagram

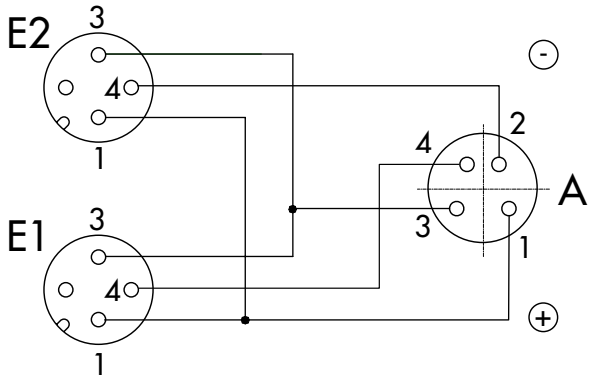



## Technical data

| Description | | V 2-M8 | V 2-M12 |
|---|---|---|---|
| ID | | 0301741 | 0301742 |
| Connection socket | | M8 | M12 |
| Cable length | [m] | 3 | 3 |
| Cable diameter | [mm] | 4.5 | 4.5 |
| Nominal voltage | [V] | 24 | 24 |
| Min. voltage | [V] | 10 | 10 |
| Max. voltage | [V] | 30 | 30 |
| Max. current per wire | [A] | 2 | 2 |
| Max. total current | [A] | 2 | 2 |

## V 2-M8 main view

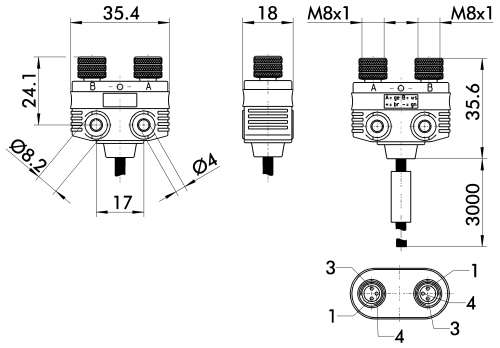


## M8 contact assignment

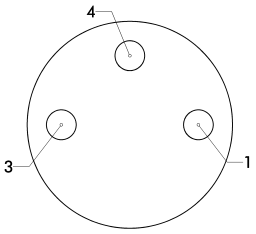


## M8 wiring diagram

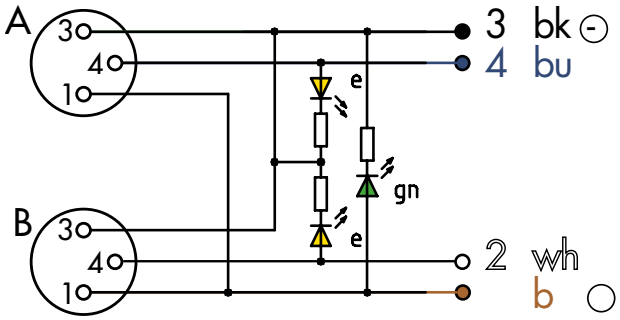


## V 2-M12 main view

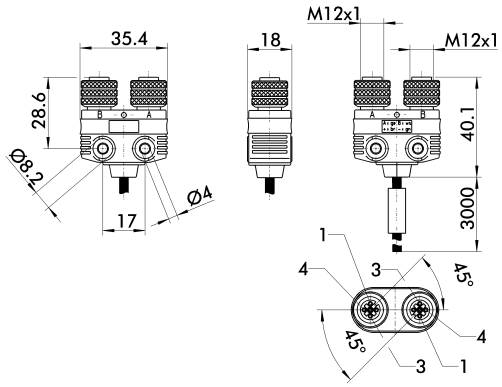


## M12 contact assignment

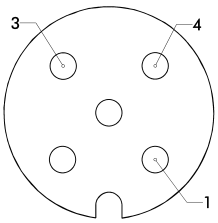


## M12 wiring diagram

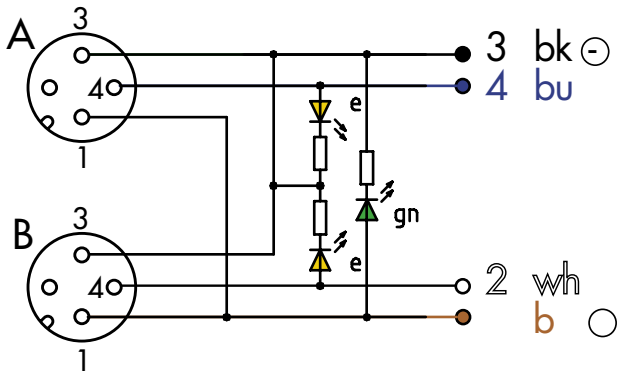



## Technical data

| Description | | V 4-M5 | V 4-M8 | V 4-M12 |
|---|---|---|---|---|
| ID | | 0301661 | 0301746 | 0301747 |
| Connection socket | | M5 | M8 | M12 |
| Cable length | [m] | 3 | 3 | 3 |
| Cable diameter | [mm] | 5 | 7 | 8.4 |
| Nominal voltage | [V] | 24 | 24 | 24 |
| Min. voltage | [V] | 30 | 30 | 30 |
| Max. voltage | [V] | 10 | 10 | 10 |
| Max. current per wire | [A] | 2 | 2 | 2 |
| Max. total current | [A] | 2 | 2 | 2 |

## V 4-M5 main view

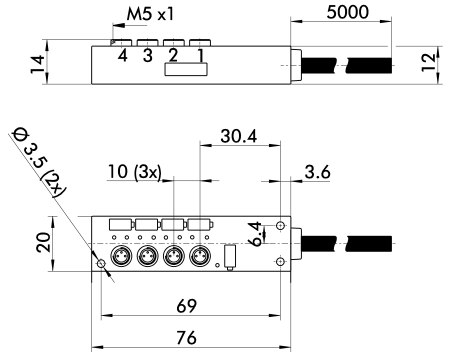


## M5 contact assignment

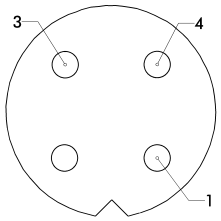


## M5 wiring diagram

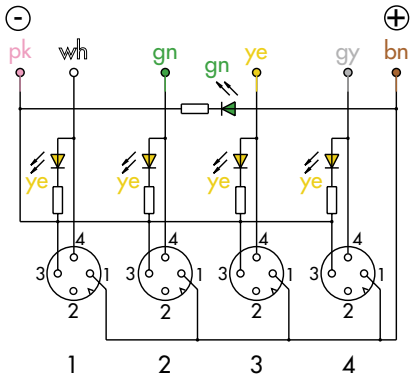


## V 4-M8 main view

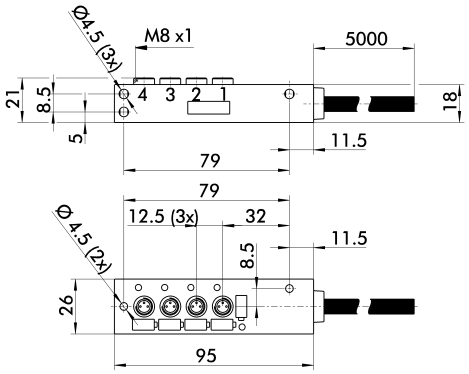


## M8 contact assignment

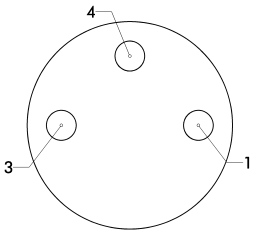


## M8 wiring diagram

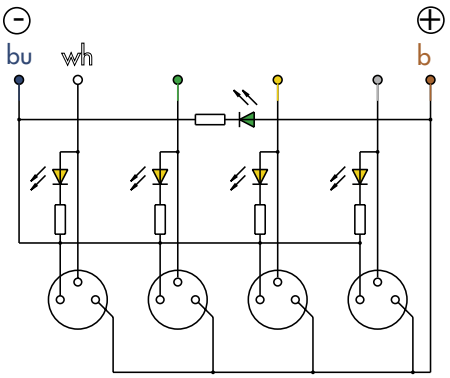

## V 4-M12 main view

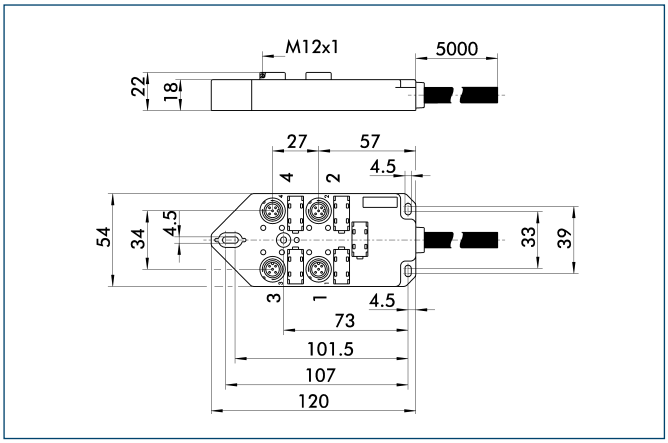


## M12 contact assignment

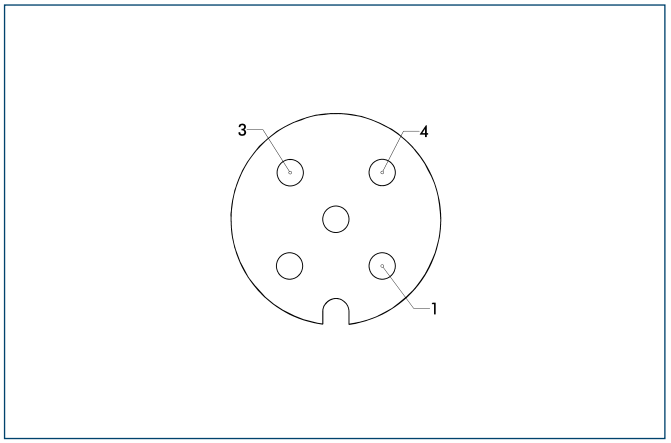


## M12 wiring diagram

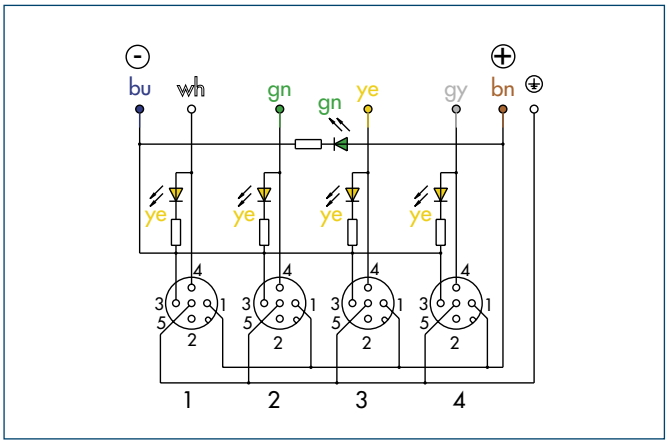

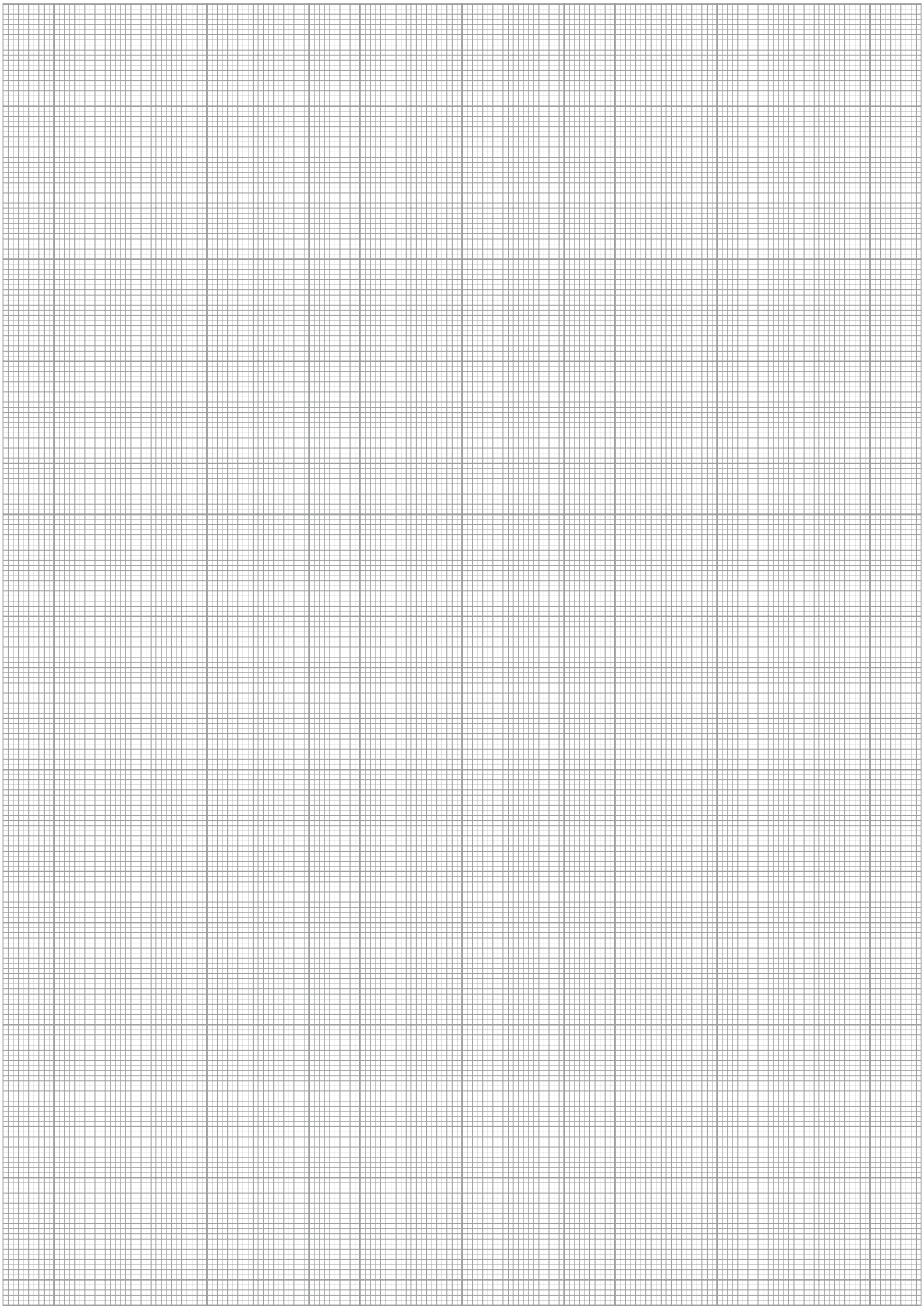



## Technical data

| Description | | V 8-M5 | V 8-M8 | V 8-M12 |
|---|---|---|---|---|
| ID | | 0301662 | 0301751 | 0301752 |
| Connection socket | | M5 | M8 | M12 |
| Cable length | [m] | 3 | 3 | 3 |
| Cable diameter | [mm] | 6.5 | 9.5 | 9.5 |
| Nominal voltage | [V] | 24 | 24 | 24 |
| Min. voltage | [V] | 10 | 10 | 10 |
| Max. voltage | [V] | 30 | 30 | 30 |
| Max. current per wire | [A] | 2 | 2 | 2 |
| Max. total current | [A] | 2 | 2 | 2 |

## V 8-M5 main view

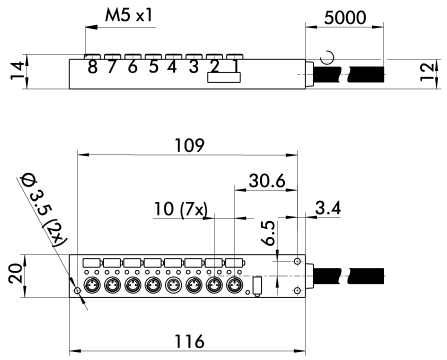


## M5 conntact assignment

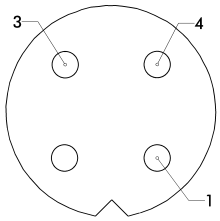


## M5 wiring diagram

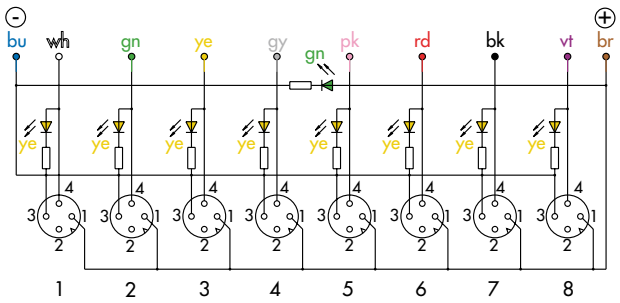


## V 8-M8 main view

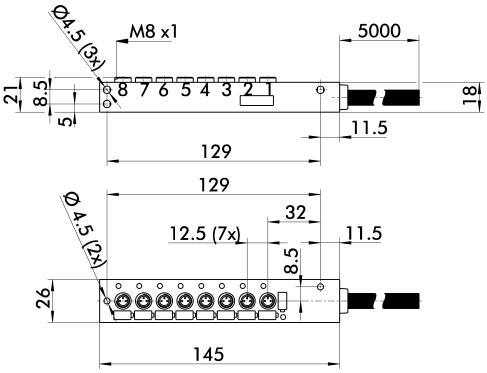


## M8 contact assignment

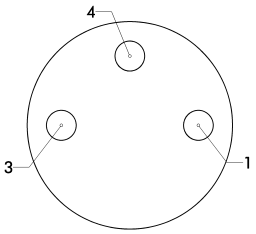


## M8 wiring diagram

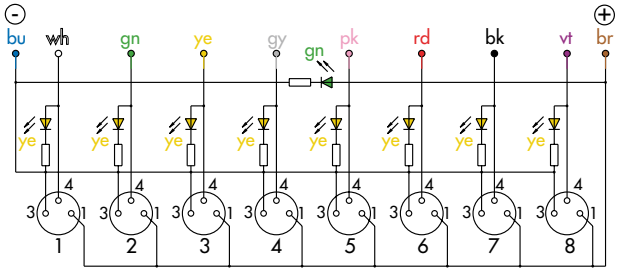

## V 8-M12 main view

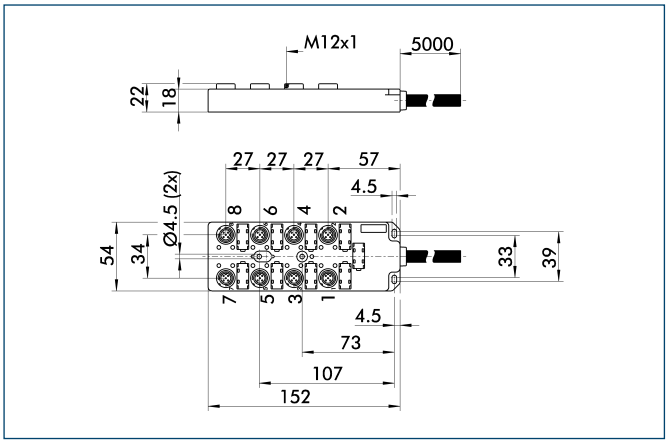


## M12 contact assignment

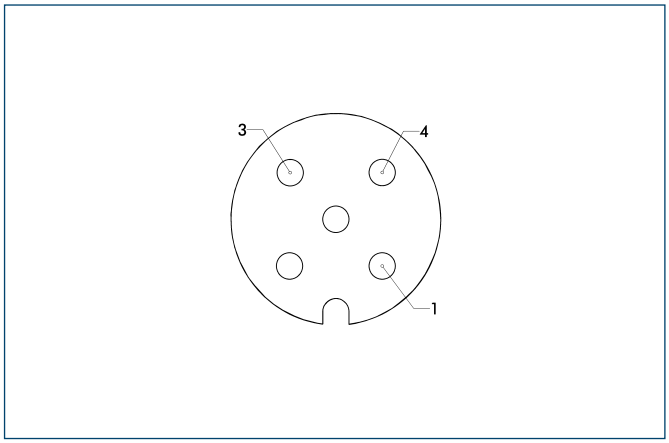


## M12 wiring diagram

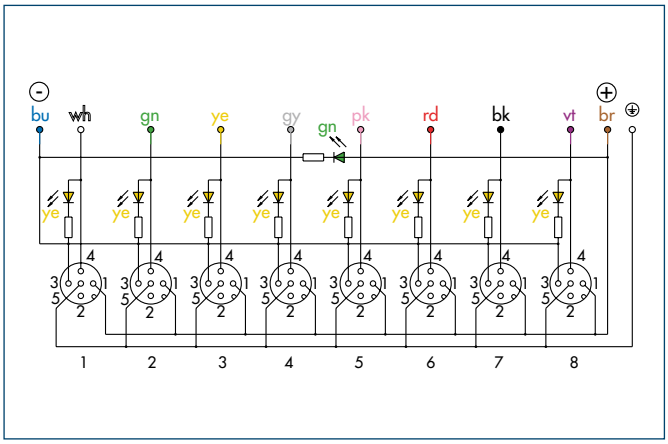

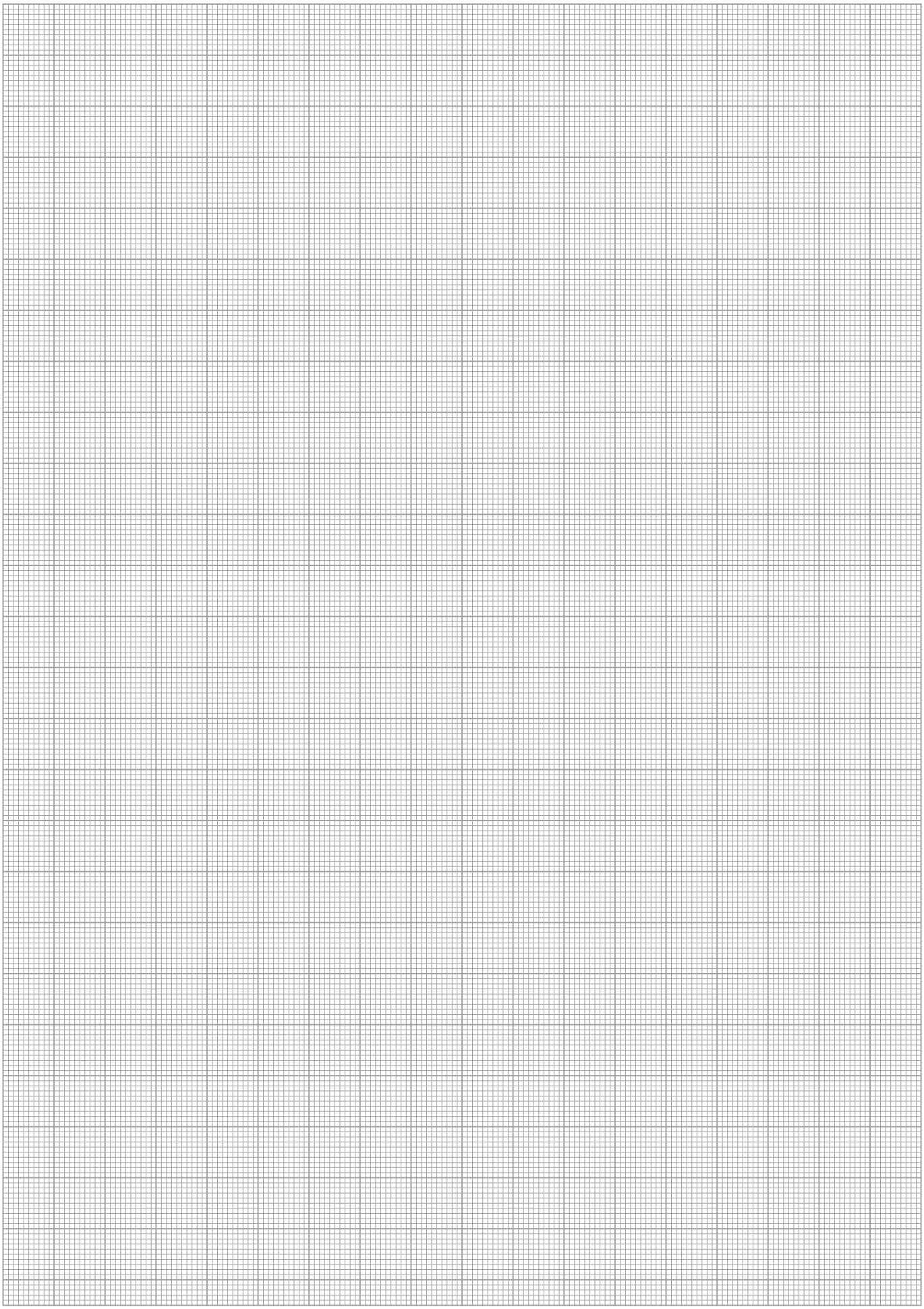

## Cable and connector

Extension cable, and customer cable connectors and sockets allowing convection, for flexible connection of SCHUNK sensor products.



## Your advantages and benefits

**Extensive accessories**
for special installation environments

## Application example

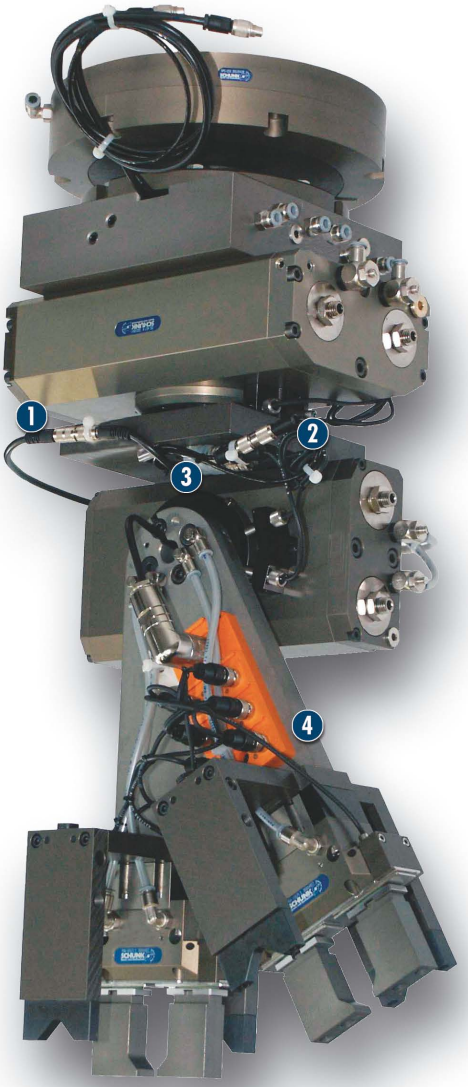


### Area of application

variable cable installations

1 Cable extension KV

2 Inductive proximity switches IN

3 V 2 Sensor Distributor

4 V 4 Sensor Distributor

## General information

### Warranty

24 months (details, general terms and conditions and operating manuals can be downloaded under www.schunk.com)



## Cable Extensions

equipped with a cable connector and cable socket for easy extension.
The switching state of the connected sensor is indicated on the LEDs integrated in the cable socket.

KV = Cable extensions
KA = Cable connection
G = Straight line plug
W = Angle plug
L = Litz wires
S = Connector
B = Bush
4P = 4 Pins

# Technical data

| Description | | KV BW08-SG08 3P-0030-PNP | KV BW08-SG08 3P-0100-PNP | KV BW08-SG08 3P-0200-PNP |
|---|---|---|---|---|
| **ID** | | **0301495** | **0301496** | **0301497** |
| Connection, sensor side | | bush | bush | bush |
| Threads, sensor side | | M8 | M8 | M8 |
| Output angle, sensor side | [°] | 90.0 | 90.0 | 90.0 |
| Connection, control cabinet side | | plug | plug | plug |
| Threads, control cabinet side | | M8 | M8 | M8 |
| Output angle, control cabinet side | [°] | 0.0 | 0.0 | 0.0 |
| Cable length | [m] | 0.3 | 1.0 | 2.0 |
| Number of wires | | 3 | 3 | 3 |
| Wire cross section | [mm²] | 0.14 | 0.14 | 0.14 |
| Cable jacket | | PUR | PUR | PUR |
| Weight | [kg] | 0.02 | 0.04 | 0.06 |
| Max. current per wire | [A] | 0.5 | 0.5 | 0.5 |
| Max. overall current | [A] | 0.5 | 0.5 | 0.5 |

| Description | | KV BW12-SG12 3P-0030-PNP | KV BW12-SG12 3P-0100-PNP | KV BW12-SG12 3P-0200-PNP | KV BG12-SG12 3P-0060-PNP | KV BG12-SG12 3P-0030-PNP |
|---|---|---|---|---|---|---|
| **ID** | | **0301595** | **0301596** | **0301597** | **0301998** | **0301999** |
| Connection, sensor side | | bush | bush | bush | bush | bush |
| Threads, sensor side | | M12 | M12 | M12 | M12 | M12 |
| Output angle, sensor side | [°] | 90.0 | 90.0 | 90.0 | 0.0 | 0.0 |
| Connection, control cabinet side | | plug | plug | plug | plug | plug |
| Threads, control cabinet side | | M12 | M12 | M12 | M12 | M12 |
| Output angle, control cabinet side | [°] | 0.0 | 0.0 | 0.0 | 0.0 | 0.0 |
| Cable length | [m] | 0.3 | 1.0 | 2.0 | 0.5 | 0.3 |
| Number of wires | | 3 | 3 | 3 | 3 | 3 |
| Wire cross section | [mm²] | 0.14 | 0.14 | 0.14 | 0.14 | 0.14 |
| Cable jacket | | PUR | PUR | PUR | PUR | PUR |
| Weight | [kg] | 0.052 | 0.078 | 0.126 | 0.048 | 0.039 |
| Max. current per wire | [A] | 0.5 | 0.5 | 0.5 | 0.5 | 0.5 |
| Max. overall current | [A] | 0.5 | 0.5 | 0.5 | 0.5 | 0.5 |

## KV BW08-SG08

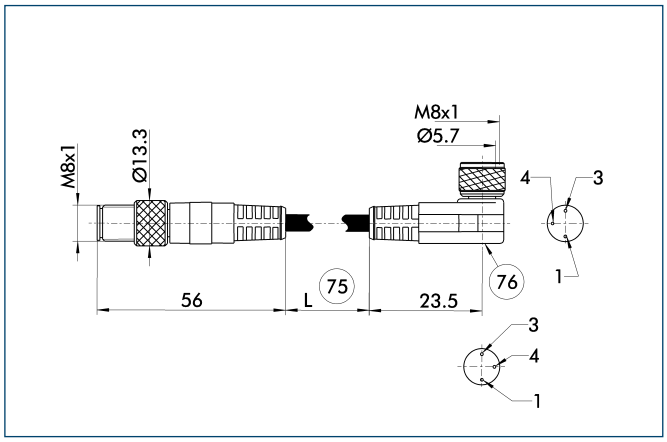


(75) Cable length
(76) LED

## KV BW12-SG12

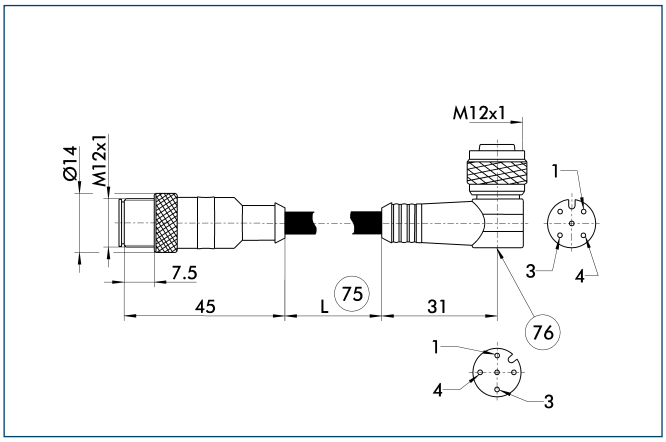


(75) Cable length
(76) LED

## KV BG12-SG12

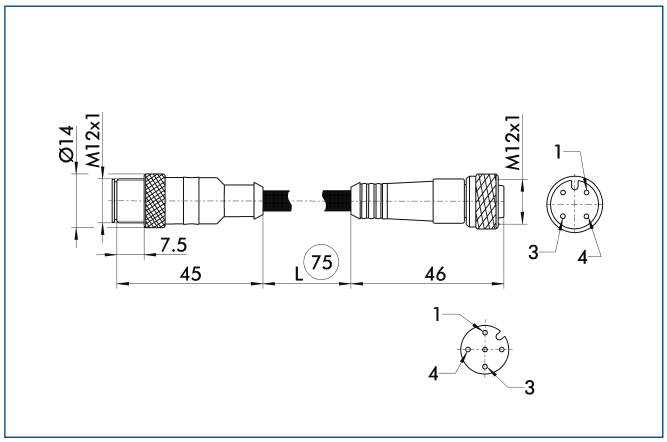


(75) Cable length



## Connection Cables

equipped with a cable socket (sensor side) and a stranded wire on the other end.
The switching state of the connected sensor is indicated on the LEDs integrated in the cable socket.

KV = Cable extensions
KA = Cable connection
G = Straight line plug
W = Angle plug
L = Litz wires
S = Connector
B = Bush
4P = 4 Pins

## Technical data

| Description | | KA BW08-L 3P-0300-PNP | KA BW08-L 3P-0500-PNP | KA BW08-L 3P-0300-NPN | KA BW08-L 3P-0500-NPN |
|---|---|---|---|---|---|
| **ID** | | **0301594** | **0301502** | **0301602** | **9641116** |
| Connection, sensor side | | bush | bush | bush | bush |
| Threads, sensor side | | M8 | M8 | M8 | M8 |
| Output angle, sensor side | [°] | 90.0 | 90.0 | 90.0 | 90.0 |
| Connection, control cabinet side | | open wire | open wire | open wire | open wire |
| Threads, control cabinet side | | | | | |
| Output angle, control cabinet side | [°] | 0.0 | 0.0 | 0.0 | 0.0 |
| Cable length | [m] | 3.0 | 5.0 | 3.0 | 5.0 |
| Number of wires | | 3 | 3 | 3 | 3 |
| Wire cross section | [mm²] | 0.14 | 0.14 | 0.14 | 0.14 |
| Cable jacket | | PUR | PUR | PUR | PUR |
| Weight | [kg] | 0.12 | 0.2 | 0.12 | 0.2 |
| Max. current per wire | [A] | 0.5 | 0.5 | 0.5 | 0.5 |
| Max. overall current | [A] | 0.5 | 0.5 | 0.5 | 0.5 |

| Description | | KA BW05-L 3P-0300 | KA BW12-L 3P-0300-PNP | KA BW12-L 3P-0500-PNP |
|---|---|---|---|---|
| **ID** | | **0301650** | **0301503** | **0301507** |
| Connection, sensor side | | bush | bush | bush |
| Threads, sensor side | | M5 | M12 | M12 |
| Output angle, sensor side | [°] | 90.0 | 90.0 | 90.0 |
| Connection, control cabinet side | | open wire | open wire | open wire |
| Threads, control cabinet side | | | | |
| Output angle, control cabinet side | [°] | 0.0 | 0.0 | 0.0 |
| Cable length | [m] | 3.0 | 3.0 | 5.0 |
| Number of wires | | 3 | 3 | 3 |
| Wire cross section | [mm²] | 0.14 | 0.14 | 0.14 |
| Cable jacket | | PUR | PUR | PUR |
| Weight | [kg] | 0.1 | 0.136 | 0.2 |
| Max. current per wire | [A] | 0.5 | 0.5 | 0.5 |
| Max. overall current | [A] | 0.5 | 0.5 | 0.5 |

## BW05

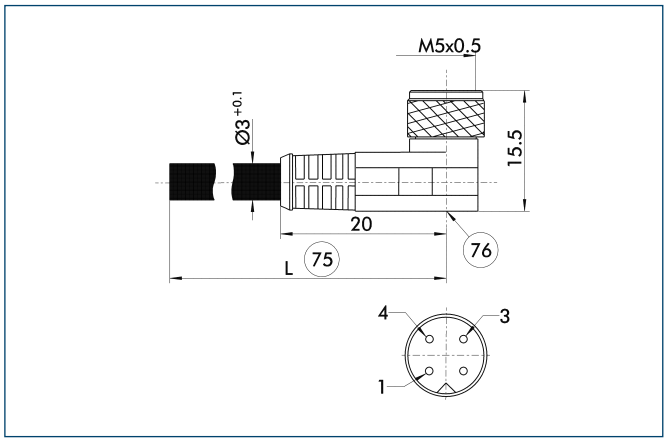


(75) Cable length
(76) LED

## BW08

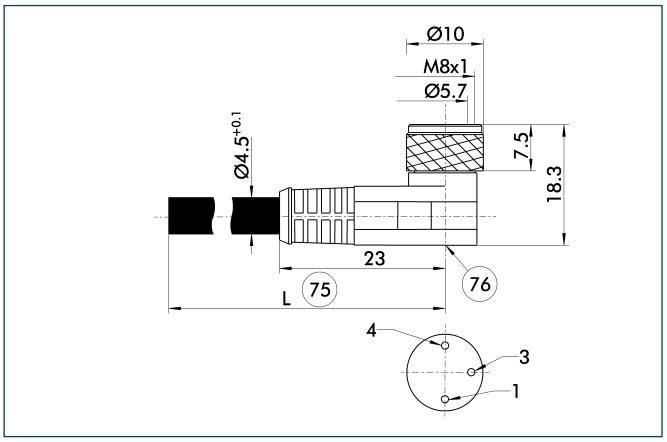


(75) Cable length
(76) LED

## BW12

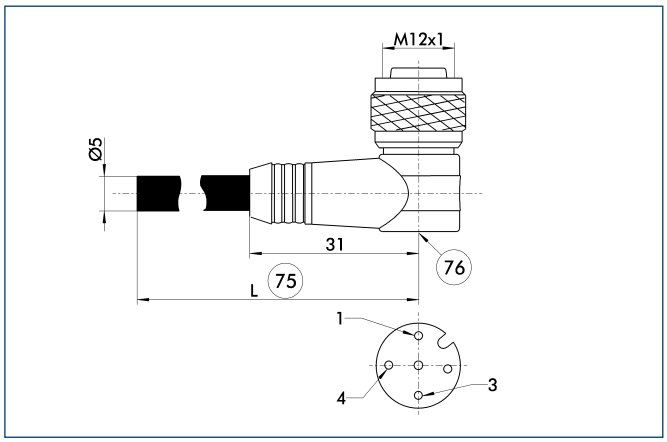


(75) Cable length
(76) LED



## Connection Cables

equipped with a cable socket (sensor side) and a stranded wire on the other end.
The switching state of the connected sensor is indicated on the LEDs integrated in the cable socket.

KV = Cable extensions
KA = Cable connection
G = Straight line plug
W = Angle plug
L = Litz wires
S = Connector
B = Bush
4P = 4 Pins

## Technical data

| Description | | KA BG05-L 3P-0300 | KA BG08-L 3P-0300-PNP | KA BG08-L 3P-0500-PNP | KA BG12-L 3P-0500-PNP |
|---|---|---|---|---|---|
| ID | | 0301652 | 0301622 | 0301623 | 30016369 |
| Connection, sensor side | | bush | bush | bush | bush |
| Threads, sensor side | | M5 | M8 | M8 | M12 |
| Output angle, sensor side | [°] | 0.0 | 0.0 | 0.0 | 0.0 |
| Connection, control cabinet side | | open wire | open wire | open wire | open wire |
| Threads, control cabinet side | | | | | |
| Output angle, control cabinet side | [°] | 0.0 | 0.0 | 0.0 | 0.0 |
| Cable length | [m] | 3.0 | 3.0 | 5.0 | 5.0 |
| Number of wires | | 3 | 3 | 3 | 3 |
| Wire cross section | [$mm^2$] | 0.14 | 0.14 | 2.14 | 0.14 |
| Cable jacket | | PUR | PUR | PUR | PUR |
| Weight | [kg] | 0.085 | 0.085 | 0.18 | 0.18 |
| Max. current per wire | [A] | 0.5 | 0.5 | 0.5 | 0.5 |
| Max. overall current | [A] | 0.5 | 0.5 | 0.5 | 0.5 |

## BG05

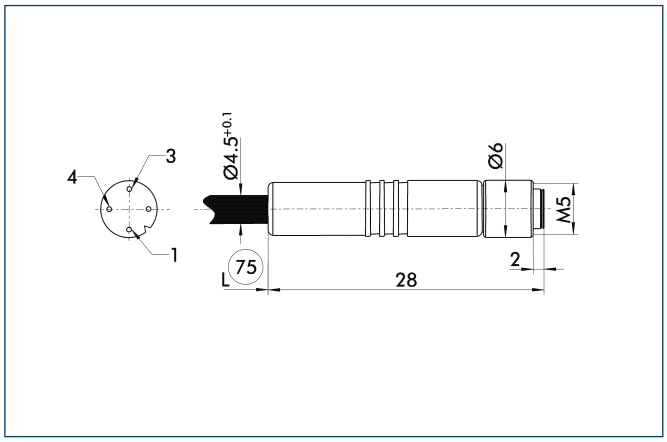


(75) Cable length

## BG08

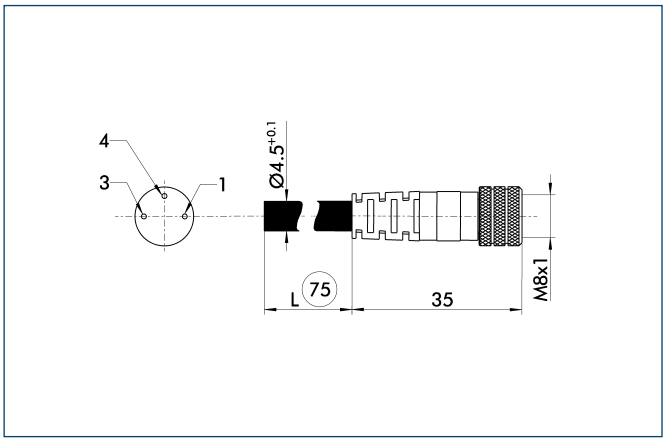


(75) Cable length

## BG12

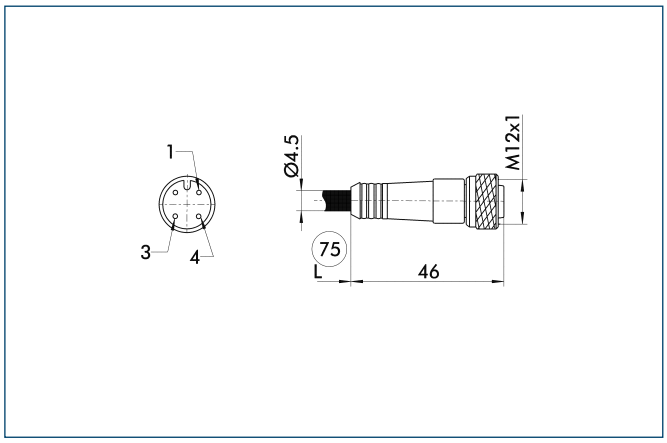


(75) Cable length



## Connection Cables

connected with a cable socket (sensor side) and a stranded wire on the other end.

KV = Cable extensions
KA = Cable connection
G = Straight line plug
W = Angle plug
L = Litz wires
S = Connector
B = Bush
4P = 4 Pins

## Technical data

| Description | | KA BW08-L 4P-0500 | KA BW08-L 4P-1000 | KA BG08-L 4P-0500 | KA BG08-L 4P-1000 | KA BW08-L 5P-0500 | KA BW08-L 5P-1000 |
|---|---|---|---|---|---|---|---|
| ID | | 0307765 | 0307766 | 0307767 | 0307768 | 0307760 | 0307761 |
| Design of connector | | angle | angle | straight | straight | angle | angle |
| Basic length | [m] | 5.0 | 10.0 | 5.0 | 10.0 | 5.0 | 10.0 |
| Max. operating voltage | [V] | 300 | 300 | 300 | 300 | 300 | 300 |
| Cable diameter | [mm] | 4.8 | 4.8 | 4.8 | 4.8 | 4.8 | 4.8 |
| Number of conductors | | 14 | 14 | 14 | 14 | 14 | 14 |
| Wire cross section | [$mm^2$] | 0.25 | 0.25 | 0.25 | 0.25 | 0.25 | 0.25 |

## KA BW08-L 4P

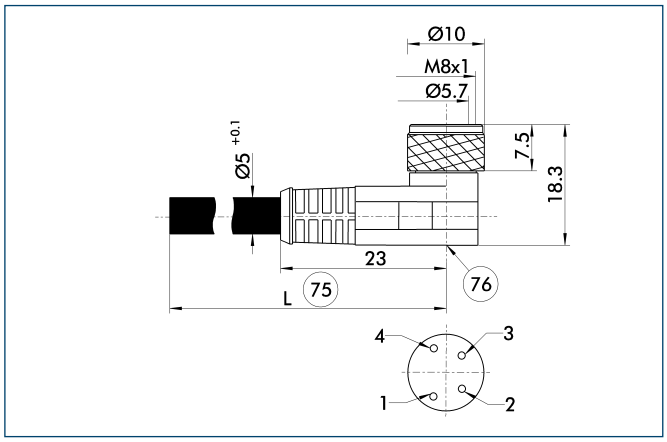


(75) Cable length
(76) LED

## KA BG08-L 4P

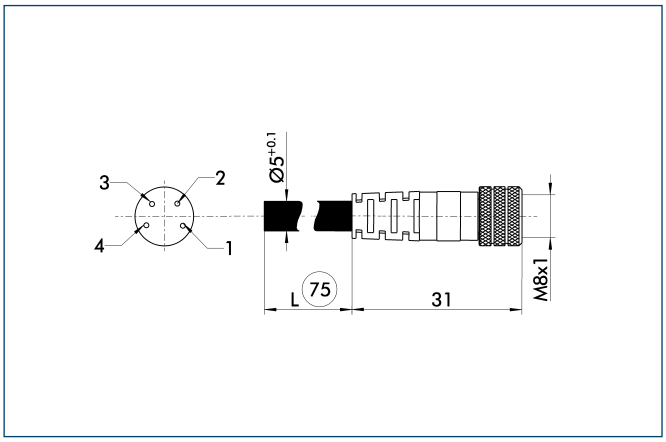


(75) Cable length

## KA BW08-L 5P

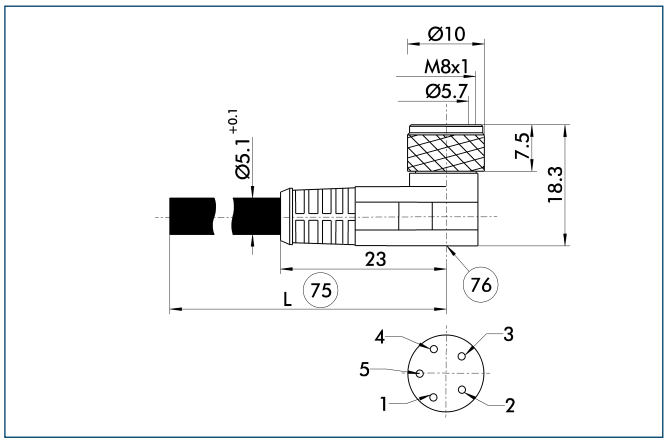


(75) Cable length
(76) LED



## Cable Connector and Socket

can be connected directly to cables. Cable connectors/sockets with M8 connection are soldered to the cable; cable connectors/sockets with M12 connection are connected via clamping.

## Technical data

| Description | | KST-M8-G | KST-M8-W | KBU-M8-G | KBU-M8-W |
|---|---|---|---|---|---|
| ID | | 300050 | 300051 | 300052 | 300053 |
| Connection | | 3-pin | 3-pin | 3-pin | 3-pin |
| Maximum voltage | [V] | 60 AC / 75 DC | 60 AC / 75 DC | 60 AC / 75 DC | 60 AC / 75 DC |
| Maximum current | [A] | 4 | 4 | 4 | 4 |
| Max. connection diameter | [$mm^2$] | 0.25 | 0.25 | 0.25 | 0.25 |
| Protection class | | IP 67 | IP 67 | IP 67 | IP 67 |
| Housing material | | PA | PA | PA | PA |

## Connector straight M8

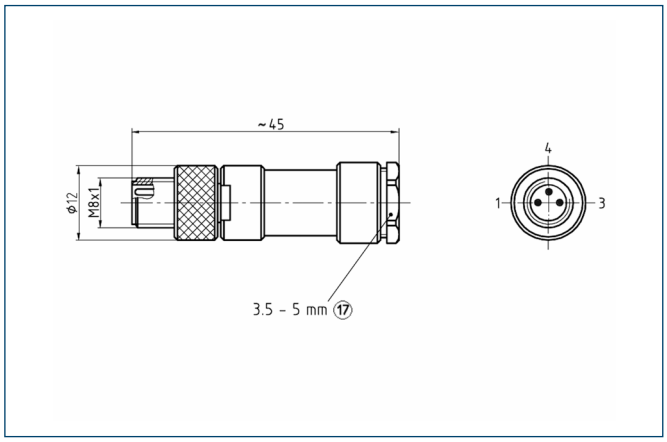


⑰ Cable outlet

## Connector angled M8

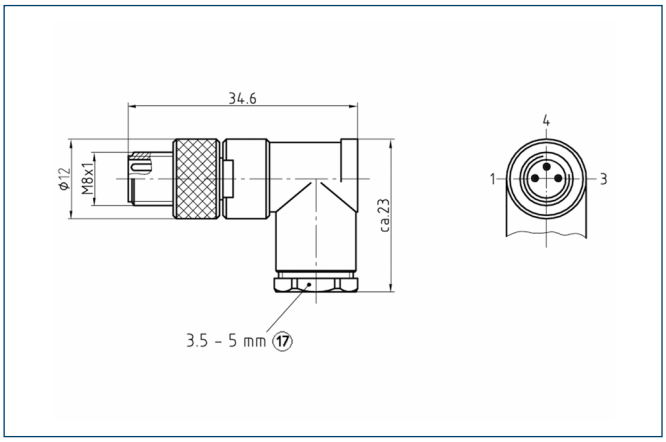


⑰ Cable outlet

## Socket straight M8

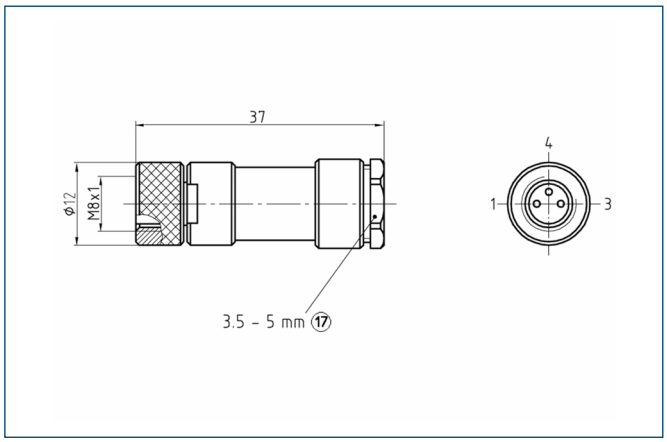


⑰ Cable outlet

## Socket angled M8

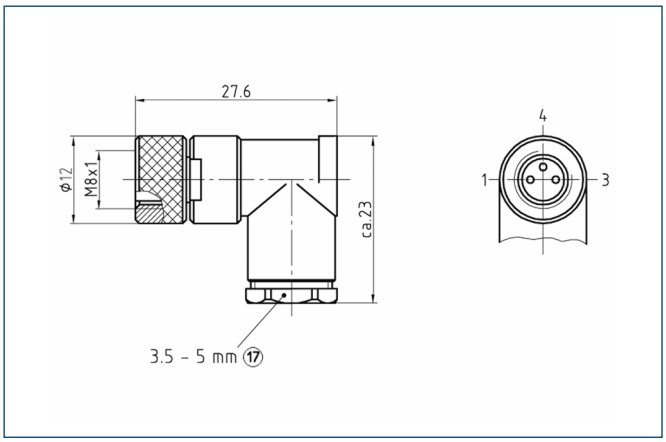


⑰ Cable outlet

# KST-M12/KBU-M12





## Cable Connector and Socket

can be connected directly to cables. Cable connectors/sockets with M8 connection are soldered to the cable; cable connectors/sockets with M12 connection are connected via clamping.

## Technical data

| Description | | KST-M12-G | KST-M12-W | KBU-M12-G | KBU-M12-W |
|---|---|---|---|---|---|
| ID | | 300060 | 300061 | 300062 | 300063 |
| Connection | | 4-pin | 4-pin | 4-pin | 4-pin |
| Maximum voltage | [V] | 250 AC / 300 DC | 250 AC / 300 DC | 250 AC / 300 DC | 250 AC / 300 DC |
| Maximum current | [A] | 4 | 4 | 4 | 4 |
| Max. connection diameter | [$mm^2$] | 0.75 | 0.75 | 0.75 | 0.75 |
| Protection class | | IP 68 | IP 68 | IP 68 | IP 68 |
| Housing material | | PA | PA | PA | PA |
| Cable clamping range | [mm] | Ø 2.5 - 6.5 | Ø 2.5 - 6.5 | Ø 2.5 - 6.5 | Ø 2.5 - 6.5 |

## Connector straight M12

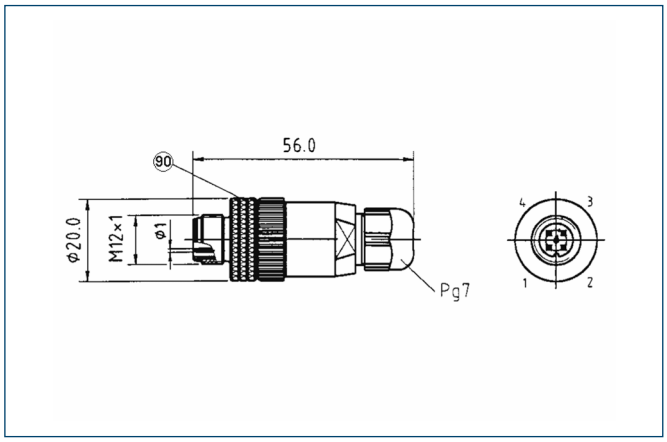


(90) Locking ring

## Connector angled M12

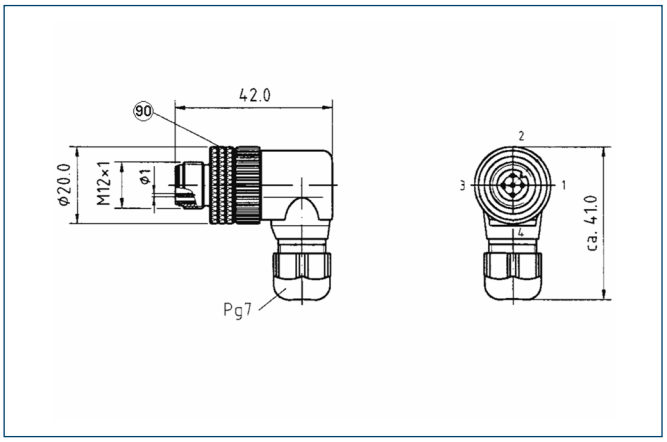


(90) Locking ring

## Socket straight M12

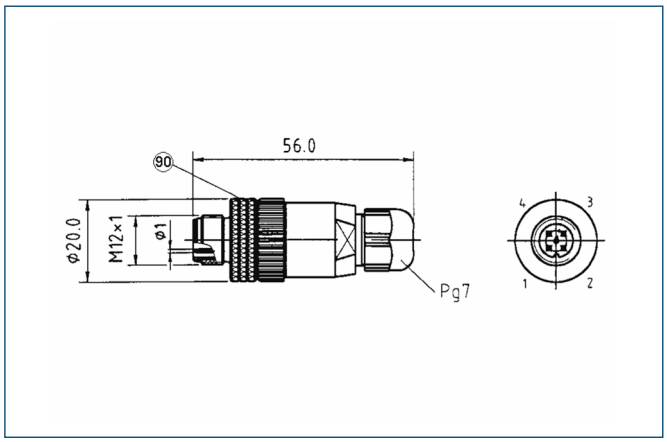


(90) Locking ring

## Socket angled M12

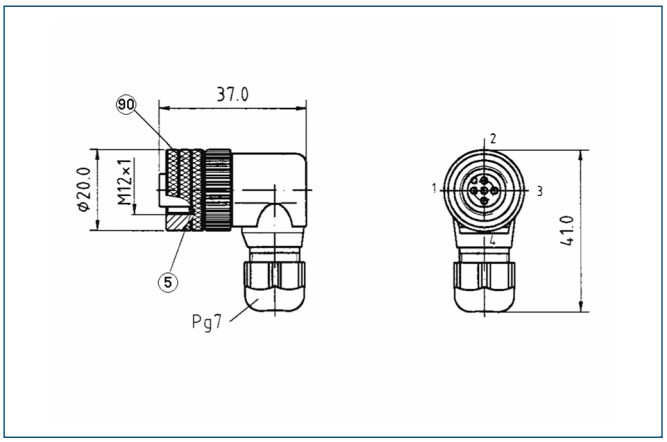


(5) O-ring
(90) Locking ring

## Analog Position Sensor System

Mechanical, analog system comprising sensor and processor for accurately recording the position of gripper jaws.




## Function description

The high-resolution APS-M1S sensor is actuated by an inclined surface (mounting kit), which is attached to the gripper base jaw. The changes in position of the sensor are recorded, amplified, prepared and made available to an analog output by the APS-M1E processor.

## Your advantages and benefits

**Position output**
as voltage (V) or current (mA)

**Precise measuring system**
also for long strokes

**Compact design**
for space-saving installation in any control cabinet

**Conforms to CE**
for absolute safety and long life during permanent operation

## Application example

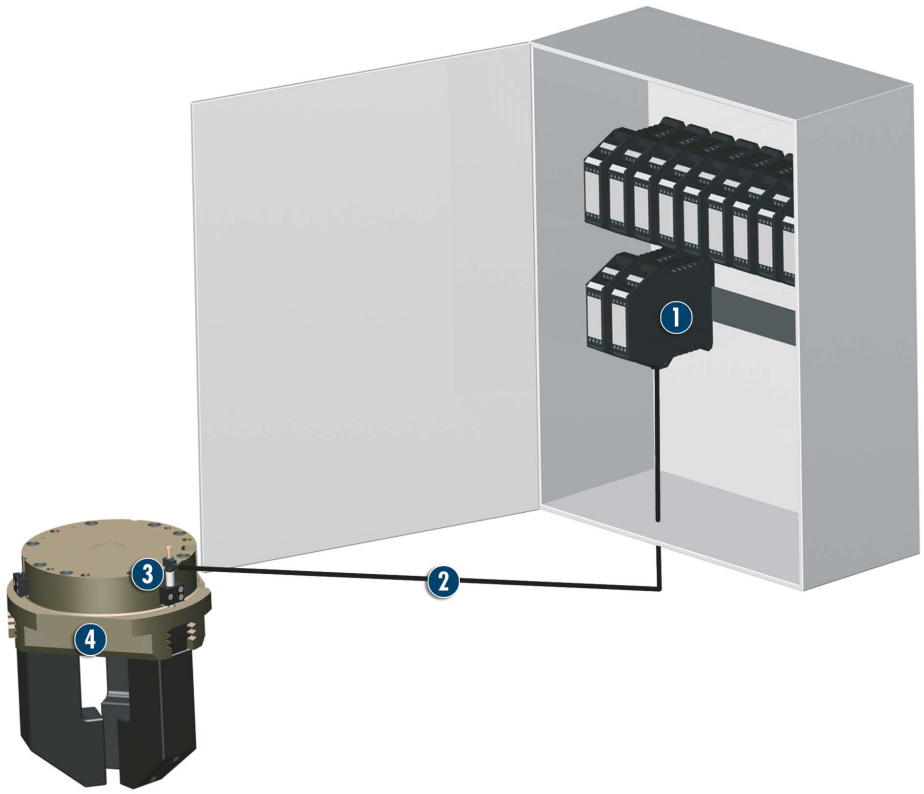


### Area of application

for the precise measurement of the gripper jaw position in clean environments

1. APS-M1E Processor
2. APS-K7 Extension Cable
3. APS-M1S Sensor
4. PZN-plus 100 3-Finger Centric Gripper

## General information

**Warranty**
24 months

**Ordering**
The sensor and processor must be ordered as individual items.

## Notes

The accuracy of the complete system as stated here is available from a stroke per jaw of 7 mm. The entire range of the sensor cannot be exploited with smaller strokes. The relative accuracy (ratio of repeat accuracy to jaw stroke) decreases, the absolute repeat accuracy (in mm) is the same as for a gripper with a 7 mm stroke, i.e. 0.021 mm.

# APS-M1



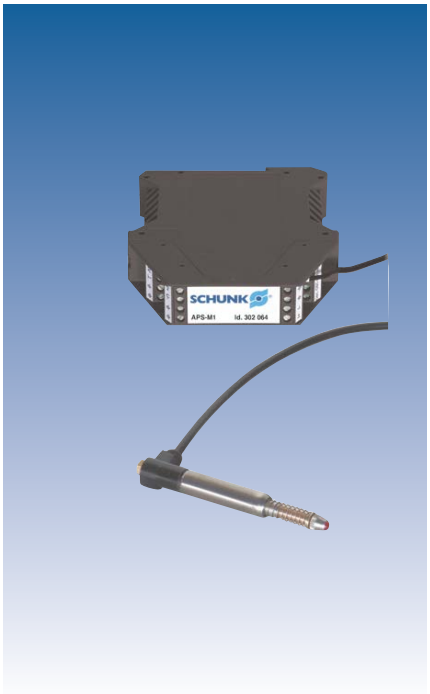


## Wiring diagram

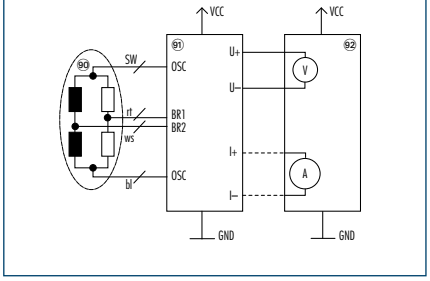


(90) APS-M1S Sensor
(91) APS-M1E Electronic Processor
(92) Automation device, e.g. S7-300

ⓘ When using an APS system, a mounting kit, APS sensor (APS-M1S) and processor (APS-M1E) are required for each gripper. The mounting kits can be found with the grippers. Mounting kits for other components/grippers are available on request. The sensor has a 3 m molded cable.

## Technical data

| Description | | APS-M1S |
|---|---|---|
| **ID** | | **0302062** |
| Measuring stroke | [mm] | 2.0 |
| Measuring accuracy | [mm] | 0.004 |
| Nominal current input | [A] | 0.023 |
| Tightness | | 67 |
| Thermal drift of zero signal | [%/10K] | 0.1 |
| Thermal drift of amplification factor | [%/10K] | 0.2 |
| Min. ambient temperature | [°C] | 10.0 |
| Max. ambient temperature | [°C] | 60.0 |
| Weight | [kg] | 0.16 |
| Sensor material | | Steel |
| Cable sheath | | PUR |

| Description | | APS-M1E |
|---|---|---|
| **ID** | | **0302064** |
| Supply voltage | | DC |
| Nominal voltage | [V] | 24.0 |
| Min. voltage | [V] | 22.0 |
| Max. voltage | [V] | 26.0 |
| Nominal power current | [A] | 0.1 |
| IP class | | 20 |
| Min. ambient temperature | [°C] | 0.0 |
| Max. ambient temperature | [°C] | 60.0 |
| Repeat accuracy (sensor and processor) | [%] | 0.3 |
| Weight | [kg] | 0.16 |
| Housing material | | PA |
| Output signal | | 0..10 V DC \| 4..20 mA |
| Fastening | | top hat rail |

## APS processor

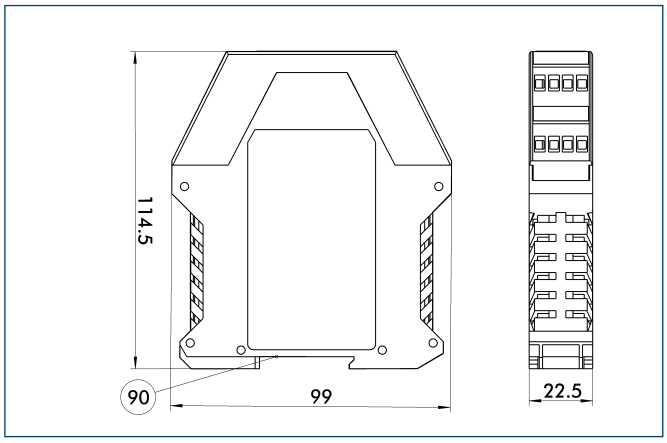


(90) Groove for mounting rail

## APS sensor

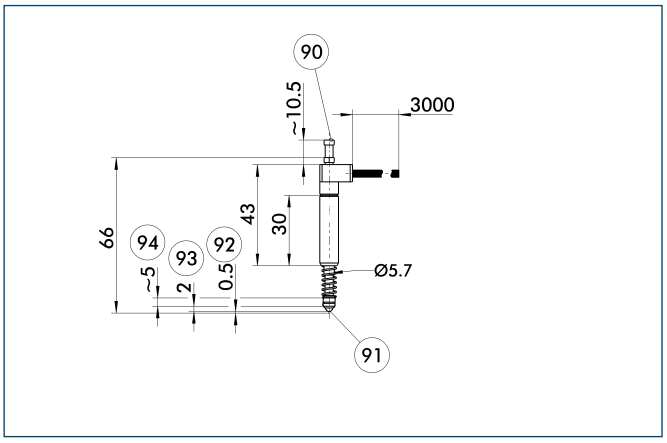


(90) Position with retracted feeler rod
(91) Carbide ball 1/8"
(92) Initial stroke
(93) Range of measurement
(94) Free stroke

## Mounting kits

The suitable mounting kit is specified with the gripper.

| ID | Description |
|---|---|
| 0302075 | AS-APS-M1-64/1 |
| 0302076 | AS-APS-M1-64/2 |
| 0302077 | AS-APS-M1-80/1 |
| 0302078 | AS-APS-M1-80/2 |
| 0302079 | AS-APS-M1-100/1 |
| 0302080 | AS-APS-M1-100/2 |
| 0302081 | AS-APS-M1-125/1 |
| 0302082 | AS-APS-M1-125/2 |
| 0302083 | AS-APS-M1-160/1 and 240/2 |
| 0302084 | AS-APS-M1-160/2 |
| 0302085 | AS-APS-M1-200/1 and 380/2 |
| 0302086 | AS-APS-M1-200/2 |
| 0302087 | AS-APS-M1-240/1 |
| 0302088 | AS-APS-M1-300/1 |
| 0302089 | AS-APS-M1-300/2 |
| 0302090 | AS-APS-M1-380/1 |

## APS-K extension cable

As an option, an extension cable can be connected between the sensor and the processor. (The max. cable length between the sensor and the processor is 10 m, between the processor and its controller (SPC) max. 1 m.)

| Description | ID | Length |
|---|---|---|
| APS-K0200 | 0302066 | 2.0 m |
| APS-K0700 | 0302068 | 7.0 m |

## FPS Flexible Position Sensor

The FPS sensor system measures the position of gripper jaws. It then indicates in which of the five freely teachable zones the jaws currently are. Additionaly the jaw position can be read out via the „FPS Controller“ software.




## Function description

A permanent magnet that moves with the base jaw permeates the FPS sensor with its magnetic field. The strength of this permeation changes depends on the distance of the magnet from the sensor. This variable is recorded, evaluated and output by the FPS electronic processor.

## Your advantages and benefits

**Simplest operation**
with just two buttons, or with the machine control system using free control lines

**Simple start-up**
as the customer can set all positions during the teaching operation

**Five digital outputs**
for greater economy as compared to individual sensors

**Small distance between two switching points, adjustable**

**Resistant to contamination**
through non-ferromagnetic materials

**Function and switching status display**
via LEDs on the electronic processor

**Conforms to CE**
for safety and long life during permanent operation

**Digital technology**
for resistance to interference

**Additional advantages of the FPS-F5 and F5 T**
- Measuring functionality
- Communication and remote maintenance via RS-232 protocol
- Position programming and readout of switching points
- Monitoring of temperature and input voltage
- Visualization via PC possible
- Data logging
- Calibration of system to gripper stroke
- Intelligent access authorization
- Adaptation to new product during the process

## Application example

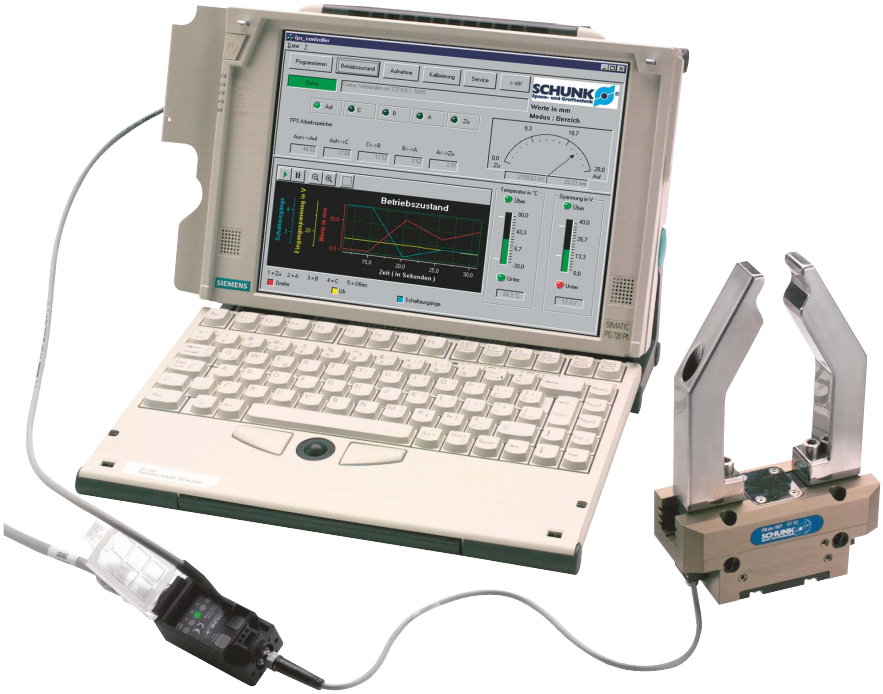


## Area of application

Position sensing of gripper jaws up to a stroke of approx. 30 mm in environments that may be clean or dirty, but are free from steel chips.

## General information

### Resolution

The resolution is the minimum stroke difference that is required in order to reliably distinguish between two signals. Used in conjunction with most SCHUNK grippers, the FPS system achieves a resolution of 1 – 3 % of a jaw stroke. However, in some grippers a resolution of only 10 % is achieved due to the nature of the design. More precise resolutions may be reached, however, with the use of special solutions. Please contact us regarding the resolution/accuracy of the FPS system.

### Connector for the electronic processor (enclosed)

12-pin circular connector (Binder type series 723, waterproof) suitable for connection cables with a diameter of 6 to 8 mm, recommended conductor cross-section 0.14 $mm^2$ (max. 0.25 $mm^2$)

### Ambient conditions

Use within the range of strong magnetic fields is not recommended. Neither the FPS sensor nor the FPS magnet may come into contact with ferromagnetic dust, chips or other substances.

### Display

Five colored LEDs

### Range of measurement

5 to 30 mm with SCHUNK magnet (NdFeB magnet cut to size, dimensions (6 x 25 mm x L) with various lengths L depending on the part of the range of measurement

### Material

Processor: Plastic PA 6
Cable: PU, resistant to coolants/lubricants

### Warranty

24 months

## Notes

All data were determined on the basis of SCHUNK attachments and specifications. Please consult us regarding use of the sensor with modules from other manufacturers.

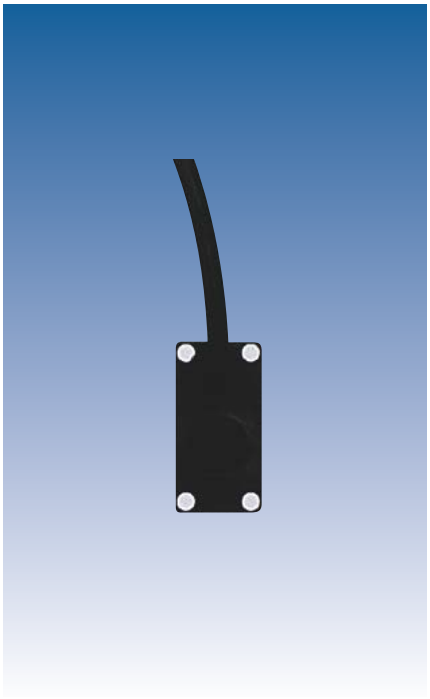

## FPS Sensors

Either the FPS-S13 or the FPS-SM8 sensor is required, depending on the type of gripper. Each sensor is connected to its own FPS-F5/F5T processor.

## Technical data

| Description | | FPS-S 13 | FPS-S M8 |
|---|---|---|---|
| ID | | 0301705 | 0301704 |
| Cable diameter | [mm] | 3.5 | 3.5 |
| Cable length | [cm] | 30.0 | 30.0 |
| Connection of FPS on processor side | | M8 | M8 |
| Weight | [kg] | 0,01 | 0,015 |
| Min. ambient temperature | [°C] | -25.0 | -25.0 |
| Max. ambient temperature | [°C] | 70.0 | 70.0 |
| IP class (sensor) | | 65 | 65 |
| IP class (connector, plugged in) | | 65 | 65 |
| Min. bending radius (dynamic) | [mm] | 17.5 | 17.5 |
| Min. bending radius (static) | [mm] | 35.0 | 35.0 |

## S-M8 sensor

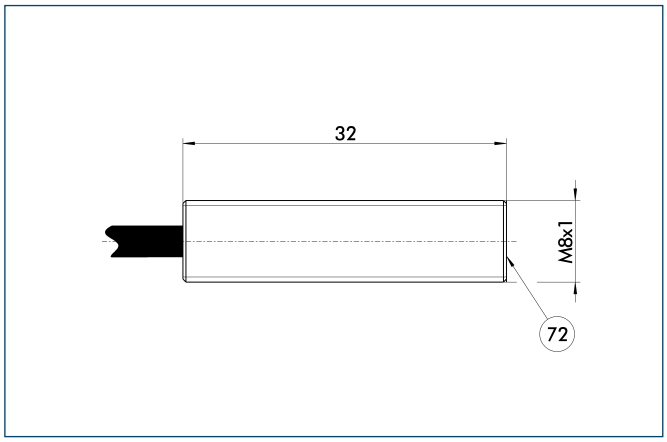


(72) Active sensor surface

## S13 sensor

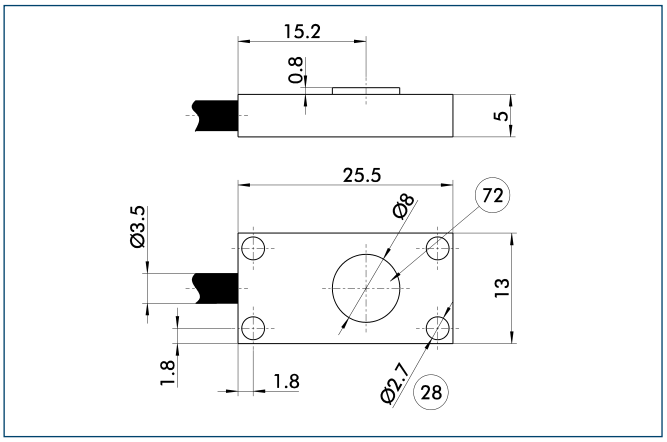


(28) Through-bore
(72) Active sensor surface

## Cable extensions

Max. extension between FPS sensor and electronic processor for trouble-free operation: 1 m

| Description | ID | Length |
|---|---|---|
| KV BG08-SG08 3P-0050 | **0301598** | 0.5 m |
| KV BG08-SG08 3P-0100 | **0301599** | 1.0 m |

# FPS-F5






## FPS-F5 Processor

Measurement of the gripper stroke using sensors, assignment to the positions/zones “Open”, “Intermediate position 1,2,3” or “Closed”, and output of a position signal. A maximum of four switching points/five zones are freely programmable, RS-232 interface, remote maintenance, measuring functionality, system calibration to the millimeter, temperature and voltage monitoring.

## FPS-F5T Processor

Measurement of the gripper stroke using sensors, comparison with target value, output of tolerance information “Within tolerance”, “Above tolerance” or “Below tolerance”, plus “Open” and “Closed”. Otherwise, like the FPS-F5.

## Technical data

| Description | | FPS-F5 | FPS-F5 T |
|---|---|---|---|
| ID | | 0301805 | 0301807 |
| Nominal voltage | [V] | 24.0 | 24.0 |
| Min. voltage (DC) | [V] | 10.0 | 10.0 |
| Max. voltage (DC) | [V] | 30.0 | 30.0 |
| Nominal current (DC) | [A] | 0.01 | 0.01 |
| Weight | [kg] | 0.06 | 0.06 |
| Min. ambient temperature | [°C] | -25.0 | -25.0 |
| Max. ambient temperature | [°C] | 70.0 | 70.0 |
| IP class | | 65 | 65 |

## Main view

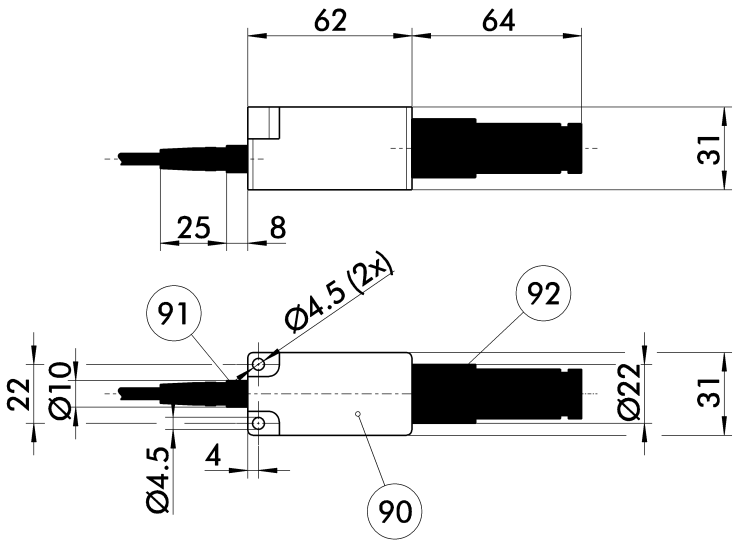


(90) Transparent plastic cover, over control and display panel
(91) Connector on sensor side
(92) Connector on control cabinet side

## Wiring diagram

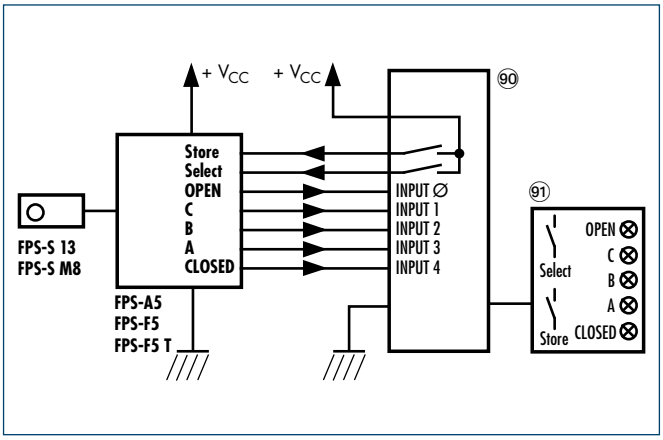


(90) SPC/PLC
(91) Machine panel (provided by customer)

For the contact assignment of the connections on the SPC side, please refer to the user's manual.

## Cable extension (open wires)

from the electronic processor to the control cabinet

| Description | ID | Length |
|---|---|---|
| KA SG16-L 12P-1000 | **0301801** | 10.0 m |

# FPS Software



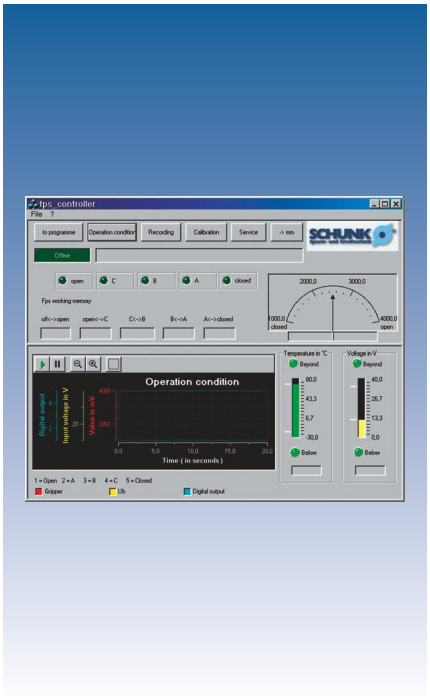


## Software for FPS-F5/F5 T

The free FPS Controller software allows the user to monitor the FPS processor via an RS-232 interface.
As a result, the FPS system can be calibrated to stroke measurement, the position can be read out and the FPS processor can be programmed.
The FPS software also provides access to all auxiliary functions.

## Technical data

| Description | Software |
|---|---|
| ID (CD) | 0301806 |
| Download | www.schunk.com |
| Operating system | MS Windows |

## Screenshot software

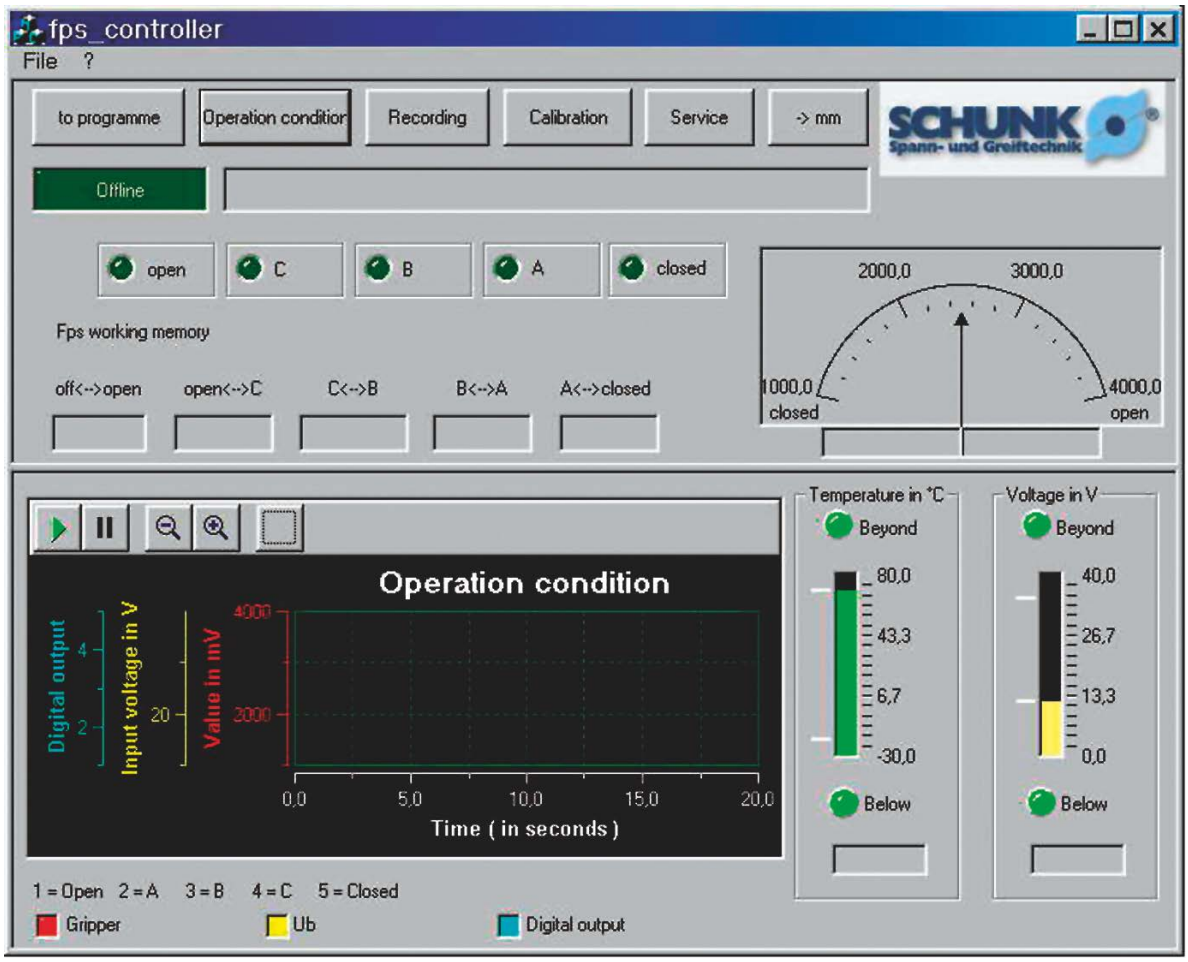


## Set-up with laptop



## Possible connection methods

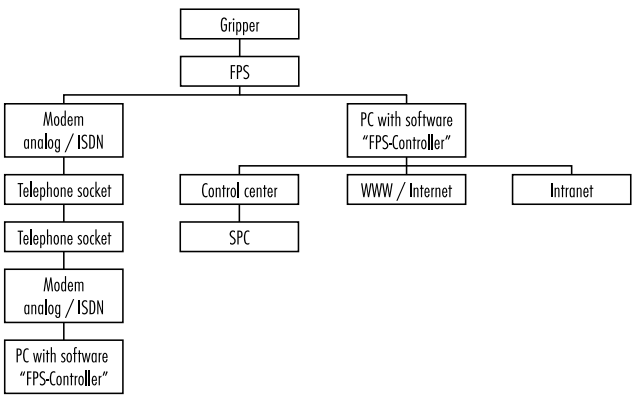

## Force Measuring System

The FMS force measuring system is used for measuring the gripping forces during the gripping process. This opens up numerous new possibilities both during start-up and in the production process.




## Function description

The FMS intermediate jaws are screwed on between the gripper base jaw and the top jaw, which comes in contact with the workpiece. Gripping forces on the top jaw result in a flow of force through the FMS intermediate jaw. Intelligently arranged strain gauges inside the intermediate jaw react to the resulting deformation.
The FMS processor detects the change in the strain gauges and emits an analog signal indicating the force.

## Your advantages and benefits

**Simplest handling**
via a control line that is directly connected to an SPC

**Easy-to-perform measurement**
of the actual, active gripping force

**Result output via analog voltage value**

**Simple, linear relationship**
between output voltage and gripping force

**Simple zero balancing**
with button or via control line

**Integrated LCD**
for visual monitoring

**Easy assembly**

**Dirt-proof and waterproof**
also for use in extreme ambient conditions.

## Application example




1. PGN-plus 100 AS
   2-Finger Parallel Gripper
2. FMS-ZBA Intermediate Jaw
   with Sensor (active)
3. FMS-ZBP Intermediate Jaw
   without Sensor (passive)
4. Workpiece-specific Gripper Finger
5. Electronic Processor

## Area of application

### Gripping force control

By sending control signals to the proportional valve that supplies the gripper, the SPC can influence the automatically measured gripping force.

### Teaching robots

When gripping firmly fixed workpieces, the teaching of robots is simple and precise. Symmetrical gripping only takes place if the left- and right-hand gripper jaws apply the same force – thereby protecting the gripper and the robot.

### Static grip force monitoring

Monitoring the grip force as the jaws close prevents the workpiece from being dropped when movement initiates. Overload protection by monitoring the max. permitted force, which can be triggered e.g. by an inadvertent increase in pressure, by off-center gripping or the incorrect positioning of the workpiece.
Preventive maintenance by replacing grippers in good time when there is a decline in the gripping force. This avoids unexpected manufacturing down-times.

### Dynamic grip force monitoring

The effect of acceleration forces on the gripper jaws can be recorded and the motion sequence modified if necessary. Component monitoring during highly dynamic movements.

### Measuring and teaching processes

Dimensional checking of the gripped component on the basis of an inserted reference component. If the component to be measured differs by more than ±0.05 mm from the reference component, teaching can take place.
If the difference is smaller, the precise dimensions can be measured accurately even to within ±0.002 mm.
Gauging the weight of the component by measuring the force due to weight of the component on the gripper fingers.

## General information

### For all PGN-plus and PZN-plus grippers

and gripper with identical finger connection diagram available as a standard product, and for other grippers on request (remember to ask about the delivery time!)

### Conforms to CE

for absolute safety and long life during permanent operation

### Warranty

24 months

## Notes

The FMS force measuring system allows you to measure forces that act on the base jaw in the direction of the jaw movement. Up to three active (equipped with sensors) FMS-ZBA intermediate jaws are required for this purpose, depending on the application. The remaining base jaws are equipped with FMS-ZBP passive intermediate jaws (without sensors). Each FMS-ZBA active intermediate jaw requires an FMS-A1 electronic processor for evaluation, and an FMS-AK connection cable for connecting the electronic processor to an SPC or a control cabinet.




## FMS Processor

Each FMS-ZBA active intermediate jaw requires an electronic processor.
The FMS-A1 processor is required for intermediate jaw sizes up to 125, the FMS-A2 processor from size 160. The electronic processor is used to prepare, display and forward the measurement results. It is equipped with a housing connector and socket for connecting the force measuring jaw and the connection cable.

## Technical data

| Description | | FMS-A1 | FMS-A2 |
|---|---|---|---|
| ID | | 0301810 | 0301811 |
| Measuring accuracy | [%] | 3.0 | 5.0 |
| Output signal | | - 5VDC.. +5VDC | - 5VDC.. +5VDC |
| Type of voltage | | DC | DC |
| Nominal voltage | [V] | 24.0 | 24.0 |
| Min. voltage | [V] | 18.0 | 18.0 |
| Max. voltage | [V] | 30.0 | 30.0 |
| Nominal power current | [A] | 0.0045 | 0.0045 |
| IP class | | 67 | 67 |
| Weight | [kg] | 0.38 | 0.38 |

ⓘ The output voltage is linear to the forces occurring at the gripper fingers. The bandwidth of the output signal is not fully exploited by every active intermediate jaw. Zero balancing must be performed prior to measurement. The limit class A according to EN 61326 is complied with. The test to EN 61000-4-2, EN 61000-4-3, EN 61000-4-4 and EN 61000-4-6 was passed in conformity with EN 61326.

## Main view

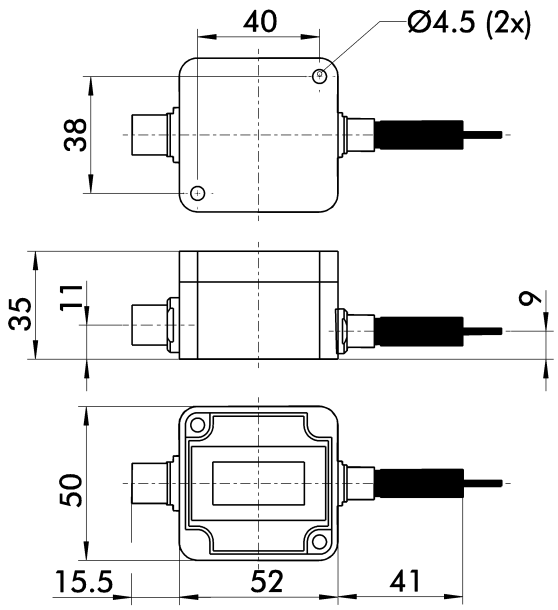


## FMS-AK connection cable

The FMS-AK connection cable is used for connecting the electronic processor to a control cabinet or an SPS. A cable bushing is fitted on the side of the electronic processor, the other side is open.

| Description | ID | Length |
|---|---|---|
| FMS-AK0500 | **0301821** | 5.0 m |
| FMS-AK1000 | **0301822** | 10.0 m |
| FMS-AK2000 | **0301823** | 20.0 m |




## Force Measuring Jaws

The force measuring jaw is situated between the gripper base jaw and the top jaw. The gripping force is conducted through it. Active intermediate jaws measure these forces and transfer the measured value to the electronic processor. Active intermediate jaws are equipped with a 30 cm cable and a cable connector. Passive intermediate jaws act solely as a bridge for the forces.

## Definitions

The range of measurement is the range in which the overall system has an accuracy of < 3 %. The overload range is the range in which the overall system has an accuracy of > 3 %. At the end of the overload range there is a risk of mechanical destruction of the intermediate jaw.

## Technical data

| Description | ID | Start of range of measurement [N] | End of range of measurement [N] | End of overload range [N] | Weight [kg] | Min. ambient temperature [°C] | Max. ambient temperature [°C] |
|---|---|---|---|---|---|---|---|
| FMS-ZBA 50 | 0301830 | 0.0 | 145.0 | 290.0 | 0.03 | -10.0 | 70.0 |
| FMS-ZBP 50 | 0301831 | | | | 0.02 | | |
| FMS-ZBA 64 | 0301832 | 0.0 | 260.0 | 520.0 | 0.04 | -10.0 | 70.0 |
| FMS-ZBP 64 | 0301833 | | | | 0.025 | | |
| FMS-ZBA 80 | 0301834 | 0.0 | 430.0 | 860.0 | 0.056 | -10.0 | 70.0 |
| FMS-ZBP 80 | 0301835 | | | | 0.035 | | |
| FMS-ZBA 100 | 0301836 | 0.0 | 685.0 | 1370.0 | 0.082 | -10.0 | 70.0 |
| FMS-ZBP 100 | 0301837 | | | | 0.055 | | |
| FMS-ZBA 125 | 0301838 | 0.0 | 1120.0 | 2240.0 | 0.128 | -10.0 | 70.0 |
| FMS-ZBP 125 | 0301839 | | | | 0.105 | | |
| FMS-ZBA 160 | 0301840 | 0.0 | 1600.0 | 3200.0 | 0.24 | -10.0 | 70.0 |
| FMS-ZBP 160 | 0301841 | | | | 0.185 | | |
| FMS-ZBA 200 | 0301842 | 0.0 | 2325.0 | 4650.0 | 0.403 | -10.0 | 70.0 |
| FMS-ZBP 200 | 0301843 | | | | 0.34 | | |
| FMS-ZBA 240 | 0301844 | 0.0 | 3700.0 | 7400.0 | 0.69 | -10.0 | 70.0 |
| FMS-ZBP 240 | 0301845 | | | | 0.59 | | |
| FMS-ZBA 300 | 0301846 | 0.0 | 5150.0 | 10300.0 | 0.907 | -10.0 | 70.0 |
| FMS-ZBP 300 | 0301847 | | | | 0.78 | | |
| FMS-ZBA 380 | 0301848 | 0.0 | 7100.0 | 14200.0 | 1.84 | -10.0 | 70.0 |
| FMS-ZBP 380 | 0301849 | | | | 1.6 | | |

## FMS-ZBA 50

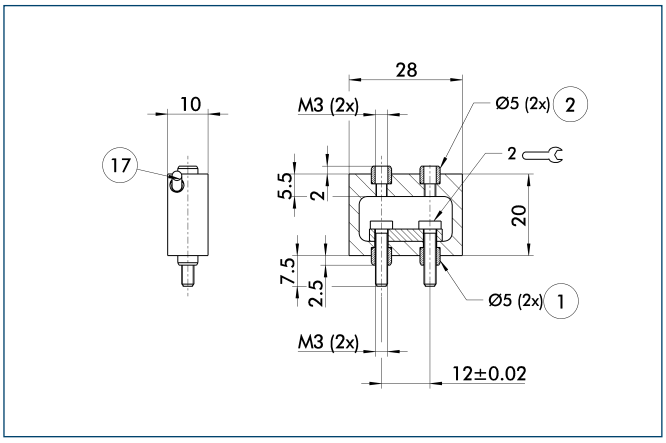


① Gripper connection
② Finger connection
⑰ Cable outlet

## FMS-ZBP 50

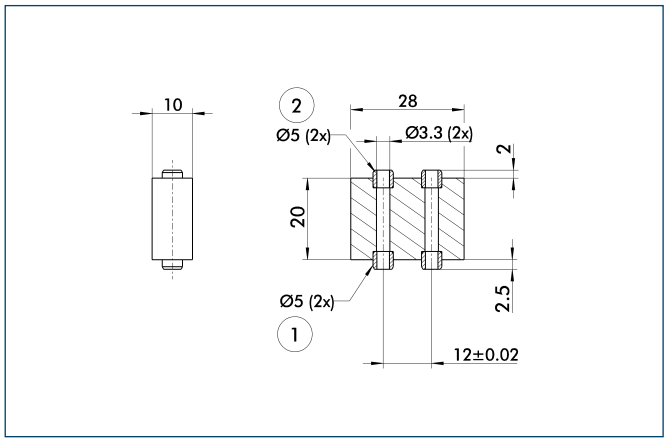


① Gripper connection
② Finger connection

## FMS-ZBA 64

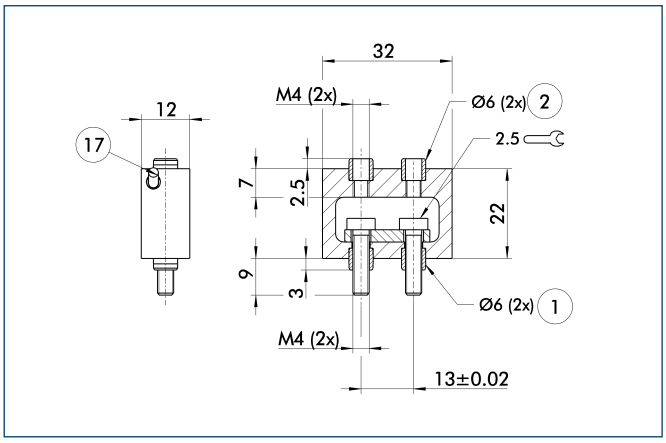


① Gripper connection
② Finger connection
⑰ Cable outlet

## FMS-ZBP 64

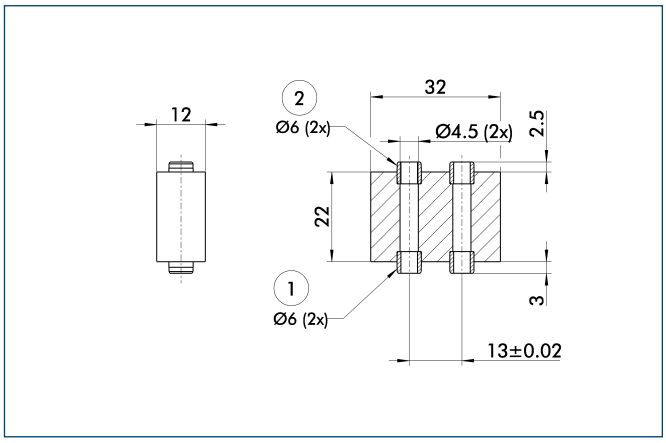


① Gripper connection
② Finger connection

## FMS-ZBA 80

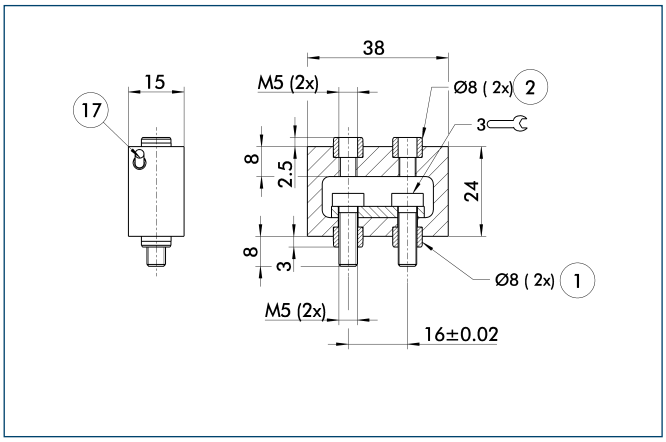


① Gripper connection
② Finger connection
⑰ Cable outlet

## FMS-ZBP 80

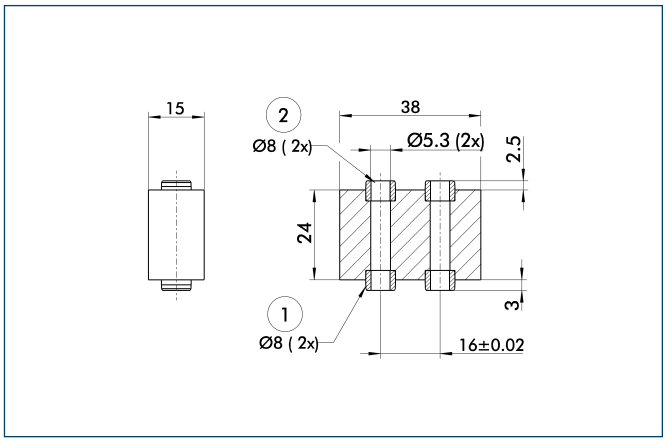


① Gripper connection
② Attachment connection

## FMS-ZBA 100

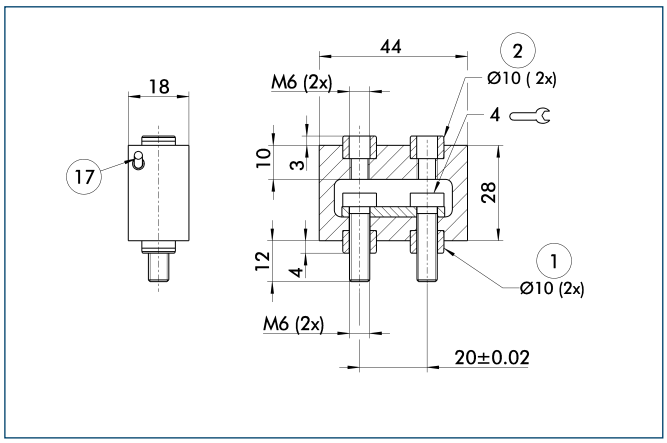


① Gripper connection
② Finger connection
⑰ Cable outlet

## FMS-ZBP 100

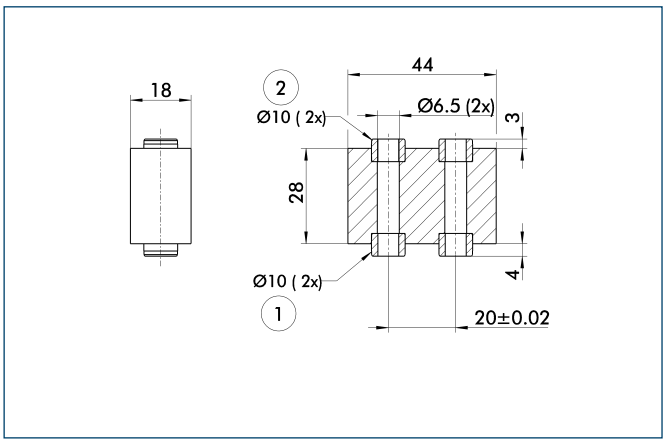


① Gripper connection
② Finger connection

## FMS-ZBA 125

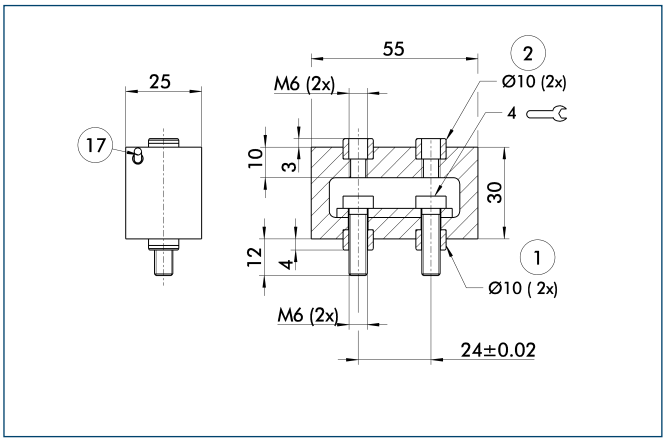


① Gripper connection
② Finger connection
⑰ Cable outlet

## FMS-ZBP 125

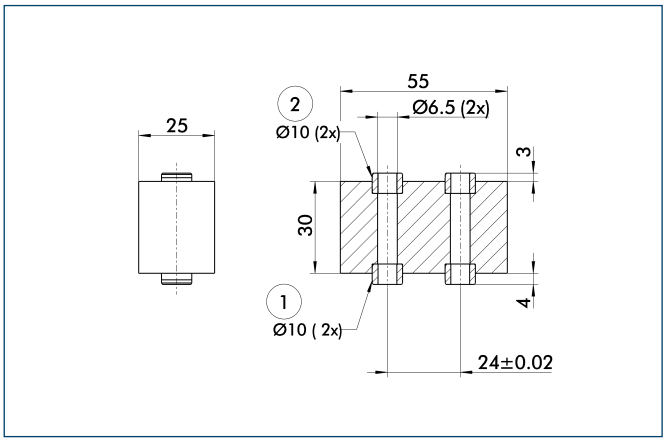


① Gripper connection
② Finger connection

## FMS-ZBA 160

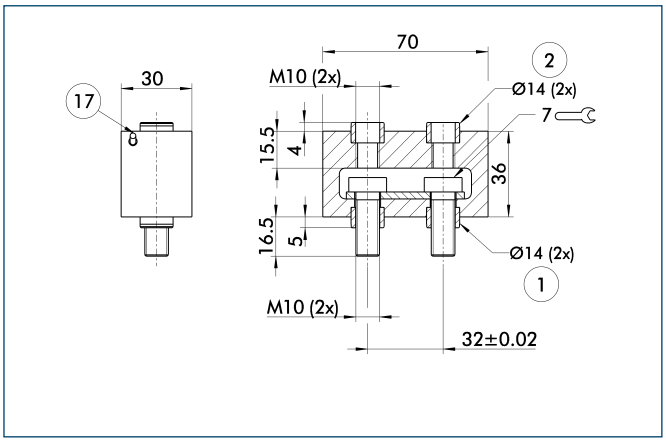


① Gripper connection
② Finger connection
⑰ Cable outlet

## FMS-ZBP 160

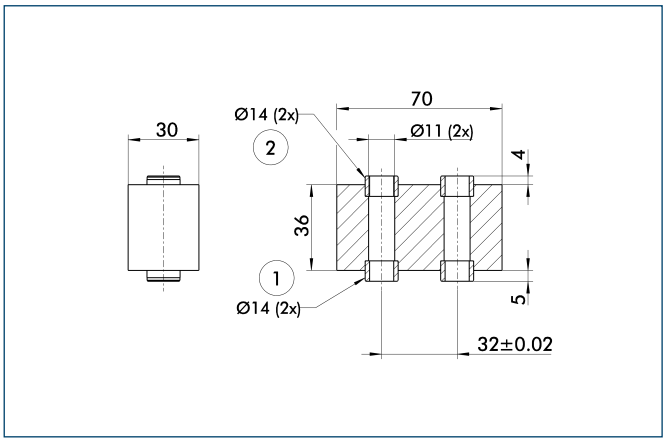


① Gripper connection
② Finger connection

## FMS-ZBA 200

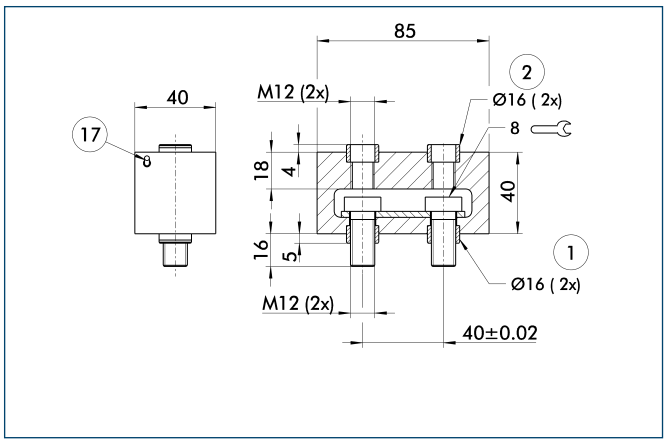


① Gripper connection
② Finger connection
⑰ Cable outlet

## FMS-ZBP 200

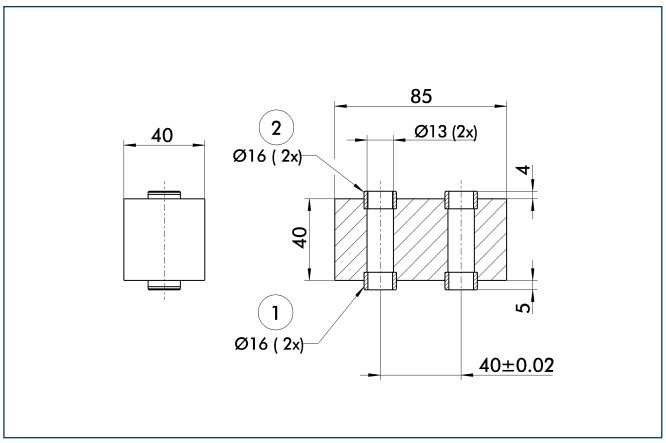


① Gripper connection
② Finger connection

## FMS-ZBA 240

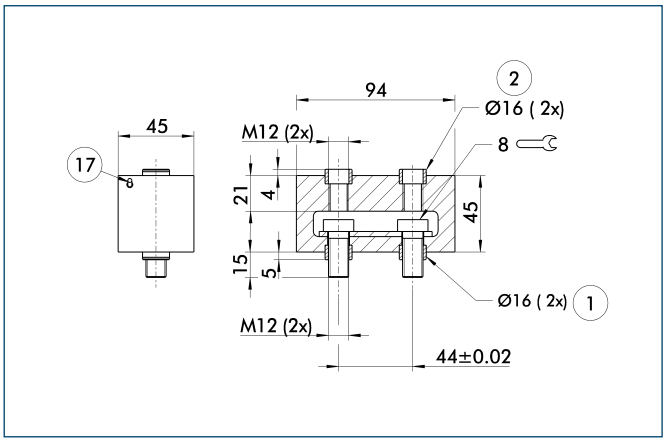


① Gripper connection
② Finger connection
⑰ Cable outlet

## FMS-ZBP 240

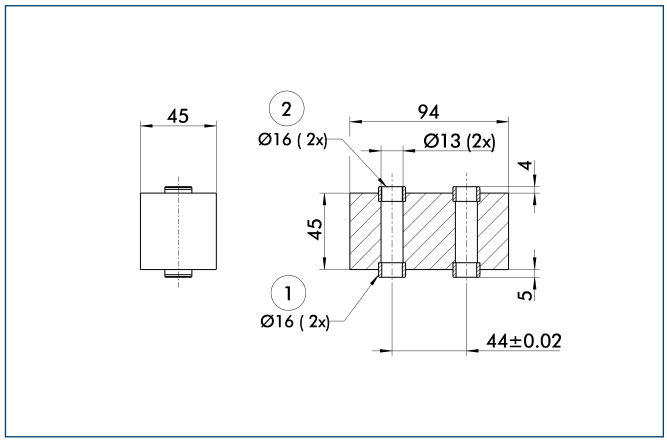


① Gripper connection
② Finger connection

## FMS-ZBA 300

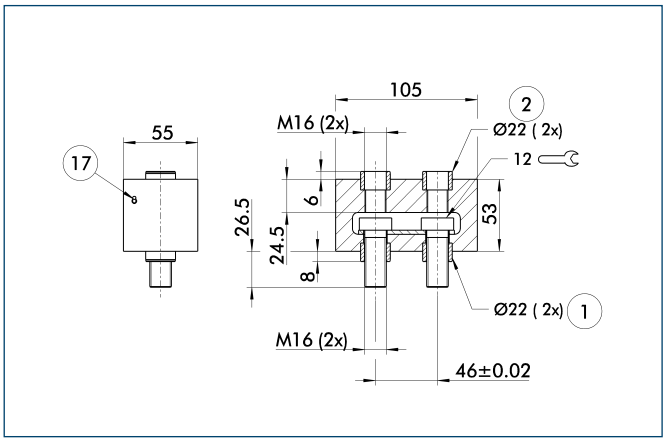


① Gripper connection
② Finger connection
⑰ Cable outlet

## FMS-ZBP 300

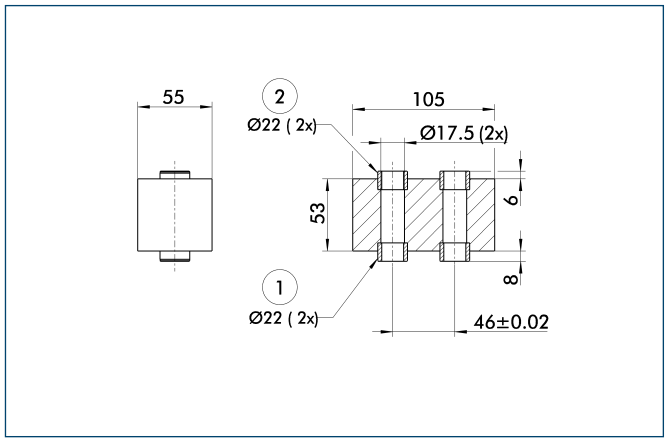


① Gripper connection
② Finger connection

## FMS-ZBA 380

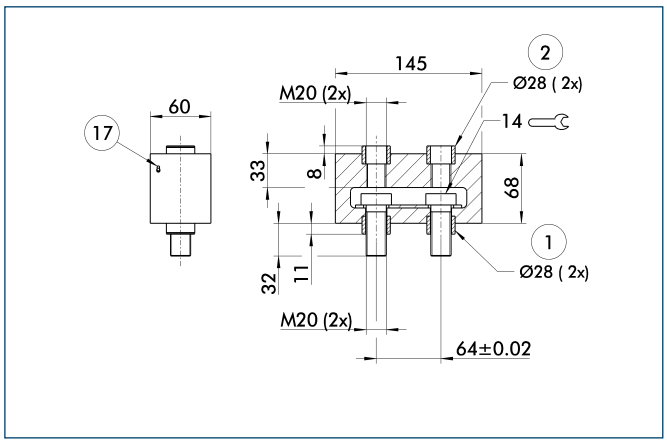


① Gripper connection
② Finger connection
⑰ Cable outlet

## FMS-ZBP 380

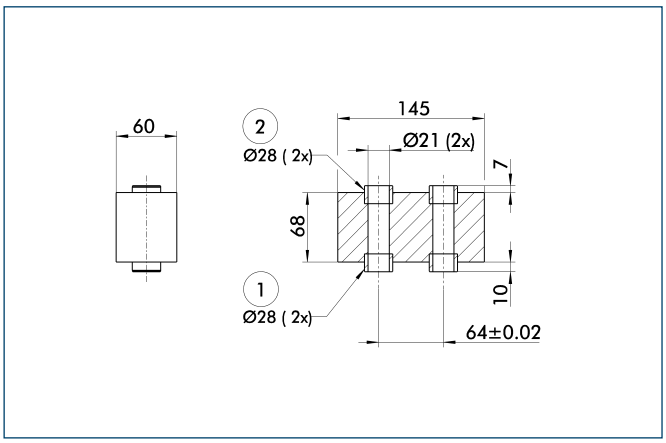


① Gripper connection
② Finger connection

## Wireless Sensors

Modular and expandable sensor system with no cable breakage, for end position monitoring of gripper modules.

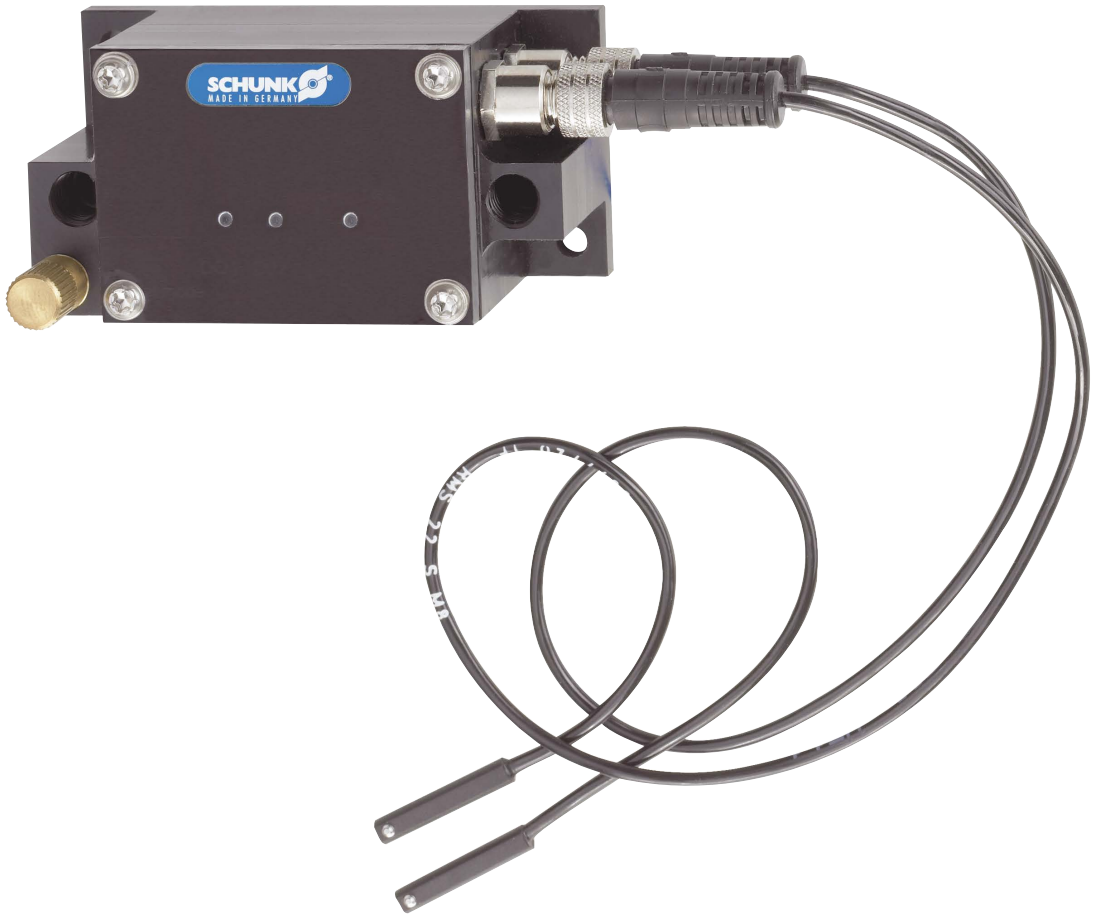


## Function description

The wireless sensor system consists of a transmitter (RSS-T2) with two mechanical switches and one receiver (RSS-R1) with an external antenna. The sensors monitor the stroke of the gripper jaw and report this to the transmitter. The latter transmits the information to the receiver, which is connected to the controller.

## Your advantages and benefits

**Wireless signal transmission**
for monitoring with no cable breakage and for use in applications where no cables can be installed

**Connection monitoring (watchdog), connection quality monitoring and battery monitoring**
for maximum controlled production and optimum system monitoring

**Space-saving installation of the Reed switches in sensor groove**
for fast and easy mounting, also as a replacement for inductive proximity switches on request

**Life of battery in transmitter module**
enables maintenance-free operation for typically more than six years

**Simple teach function**
for fast and easy functional commissioning

## Application example

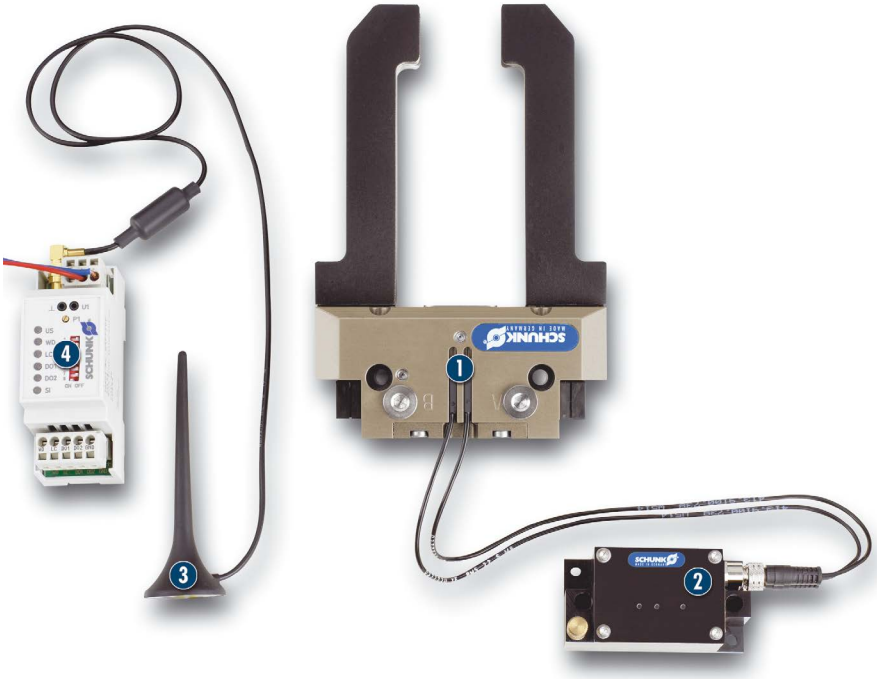


1 Reed switch RMS 22 in sensor groove of the 2-Finger Parallel Gripper PGN-plus

2 Transmitter module RSS-T2

3 Magnetic base antenna RSS-R-A

4 Receiver RSS-R1

## Area of application

The new wireless RSS sensor system can be used anywhere where no cable feed is possible.
For example in milling or grinding machines, machining centers, or in rotating or close applications which are unsuitable for cable ducts. However, the RSS is also ideal for use in adverse ambient conditions and explosive areas.

## General information

**Protection class according to DIN 40050**
IP 67 in connected condition for use in clean or dusty environments or in the event of contact with water. Contact with other media (cooling lubricants, acidic or caustic substances, etc.) frequently does not impair the function, but this cannot be guaranteed by SCHUNK.

**Typical transmission ranges**
approx. 10 meters in workshops
approx. 30 meters in the open

**Power supply, receiver**
24 V DC, 500 mA output

**Life of transmitter battery**
Min. 6 years at 2 transmissions / second
Min. 8 years at 1 transmission / second

**Warranty**
24 months

## Notes

Sheet steel prevents propagation of radio waves.
The radio energy transmitted by the RSS is a factor of 70,000 below that of DECT telephones and a factor of 30,000 below that of GSM mobile phones.

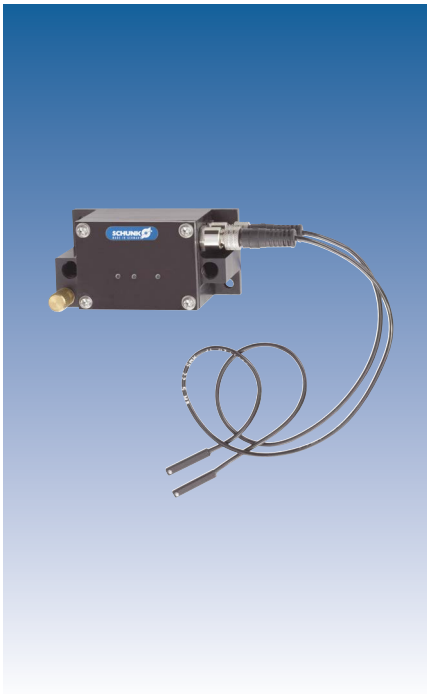

## RSS-T2 Transmitter

The RSS-T2 transmitter can transmit the signals from 2 switches. We recommend the use of RMS 22 or RMS 80.
Alternative switches can also be used. However, they must not require energy supply.

# Technical data

### Transmitter module

| Description | | RSS-T2 |
|---|---|---|
| **ID** | | **0377710** |
| Transmitting frequency | [MHz] | 868.3 |
| Transmitter connection | | 2x M8 |
| Integrated power supply | | Lithium battery |
| Typical life of the battery | [Years] | 8 |
| Housing material | | PUR |
| Log | | Enocean standard |
| Tightness | | IP 67 |
| Min. ambient temperature | [°C] | 0 |
| Max. ambient temperature | [°C] | 50 |
| Weight | [kg] | 0.16 |

## Main view

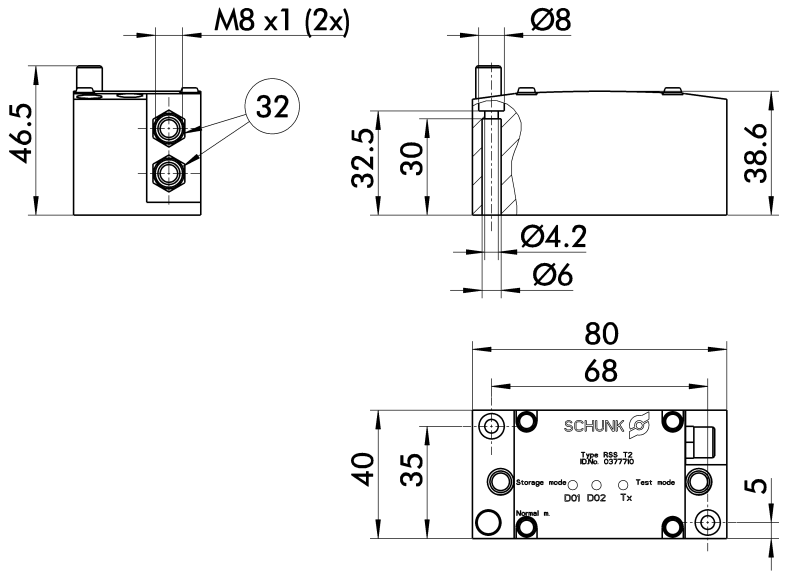


(32) Flange socket for sensor feed-through

## RMS 22 sensor

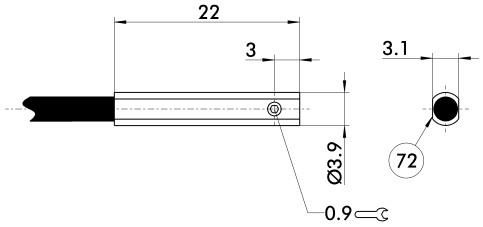


(72) Active sensor surface

Further information on the RMS sensor can be found in the chapter on "Reed Switches".

## RMS 80 sensor

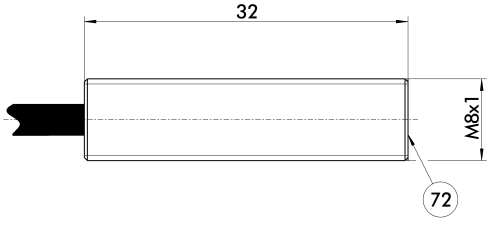


(72) Active sensor surface

Further information on the RMS sensor can be found in the chapter on "Reed Switches".

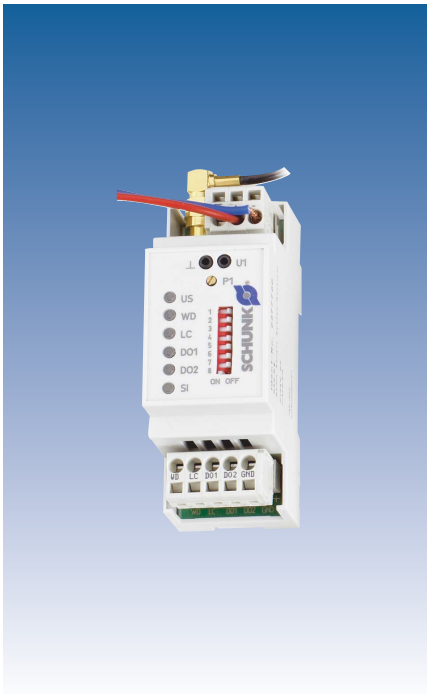

## RSS-R1 Receiver

The RSS-R1 receiver can receive the signals of the RSS-T2 transmitter.
One receiver and one antenna are needed for each transmitter.

# Technical data

### Receiver

| Description | | RSS-R1 |
|---|---|---|
| **ID** | | **0377700** |
| Receiving frequency | [MHz] | 868.3 |
| Power supply | | DC |
| Nominal voltage | [V] | 24 |
| Min. voltage | [V] | 10 |
| Max. voltage | [V] | 30 |
| Max. current on contact per channel | [mA] | 500 |
| Housing material | | PUR |
| Log | | Enocean standard |
| Short-circuit-proof | | Yes |
| Tightness | | IP 20 |
| Fastening | | Top hat rail |
| Min. ambient temperature | [°C] | 0 |
| Max. ambient temperature | [°C] | 50 |

### Antenna

| Description | | RSS-R-A |
|---|---|---|
| **ID** | | **0377730** |
| Assembly | | Magnetic base |
| Cable length | [m] | 2 |
| Connection to cable end | | SMA Mini |
| Utilization | | Connection to receiver RSS-R1 |

## Main view

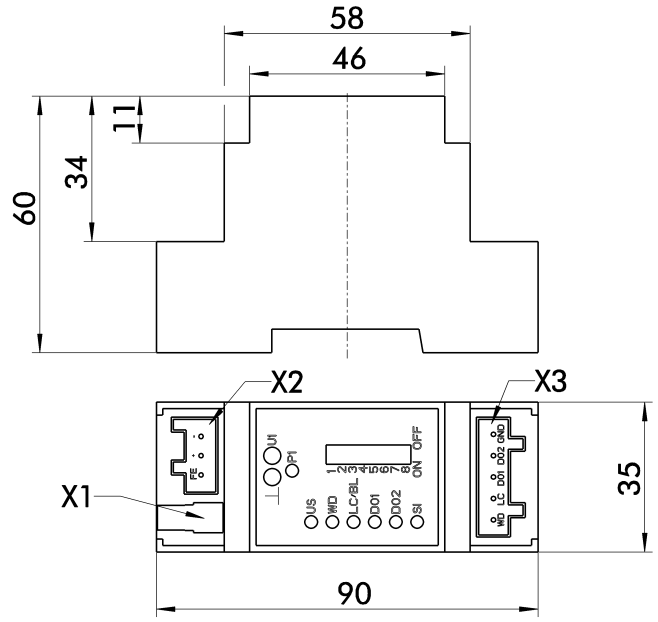


## RSS-R-A antenna

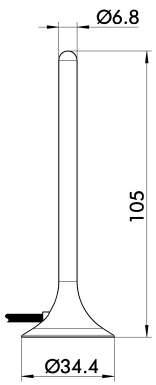

## Fluidic Monitoring System

Pneumatic monitoring for three positions. For systems that can be monitored by means of conventional sensors.




## Function description

The PA3 returns the information "open", "gripped" or "closed" to the controller via a single, additional pneumatic line. The pneumatic actuator only has to be modified with two pneumatic connections for this purpose. The PA3 is started up via a push button switch and a potentiometer. The unit is automatically taught during a set-up cycle.

## Your advantages and benefits

**Position scan without electric sensors**
for diverse applications in new environments

**An additional pneumatic line as an information hose**
therefore only slight modification of the gripper necessary, also possible as retrofitting of existing components

**Simple start-up**
via button and potentiometer

**Self teach-in function**
for automatic teaching of the monitoring system during the set-up cycle

## Application example

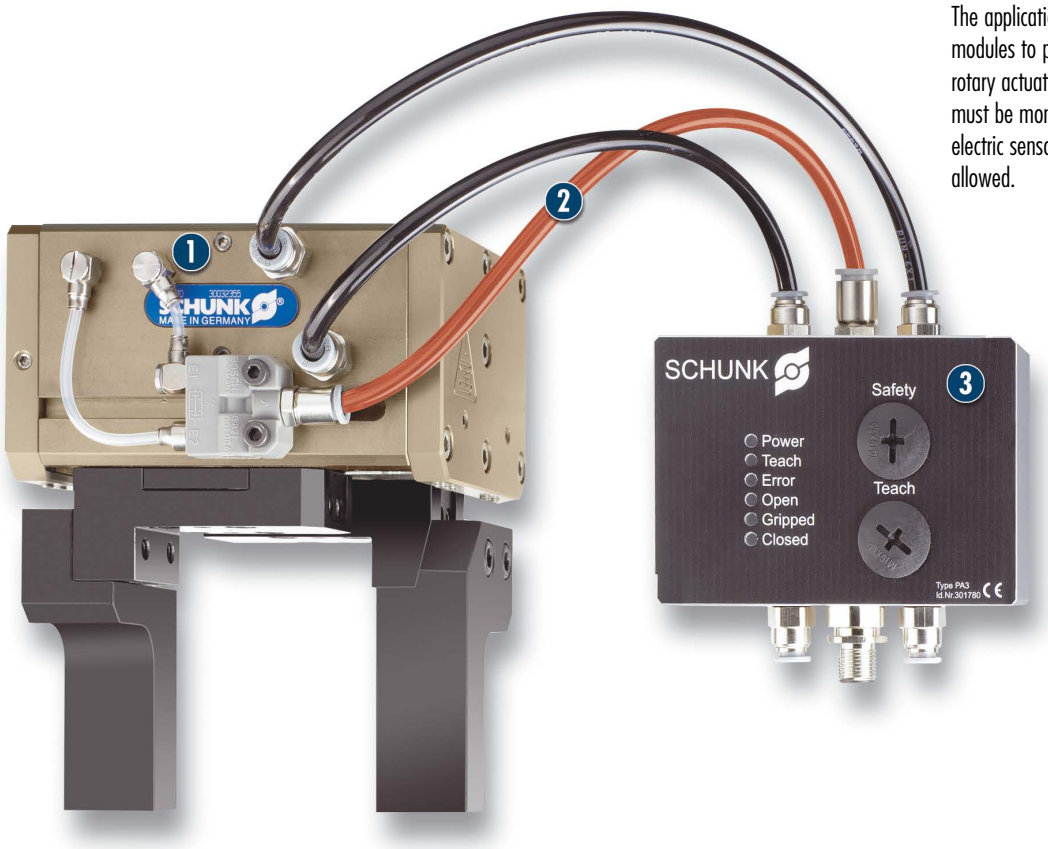


### Area of application

The applications range from pneumatic gripper modules to pneumatic actuators, such as cylinders or rotary actuators. For example, when gripper modules must be monitored in places that are not accessible by electric sensors or where electric sensors are not allowed.

1 **2-Finger Long-stroke Gripper PFH 30**
with special bores for the PA3

2 **Additional information source**

3 **PA3-Electronic system**

## General information

**Power supply for electronics**
24 V DC

**Warranty**
24 months




## Technical data

| Description | | PA3 |
|---|---|---|
| **ID** | | **0301780** |
| IP class | | 67 |
| Type of voltage | | DC |
| Nominal voltage | [V] | 24 |
| Min. voltage | [V] | 21.6 |
| Max. voltage | [V] | 26.4 |
| Nominal power current | [mA] | 30 |
| Maximum current | [mA] | 130 |
| Weight | [kg] | 1.13 |
| Hose connection | [mm] | 6 |
| Min. nominal pressure | [bar] | 3 |
| Max. pressure | [bar] | 10 |
| Permissible media | | compressed air |
| Typical switching time | [s] | 1 |

## Main view

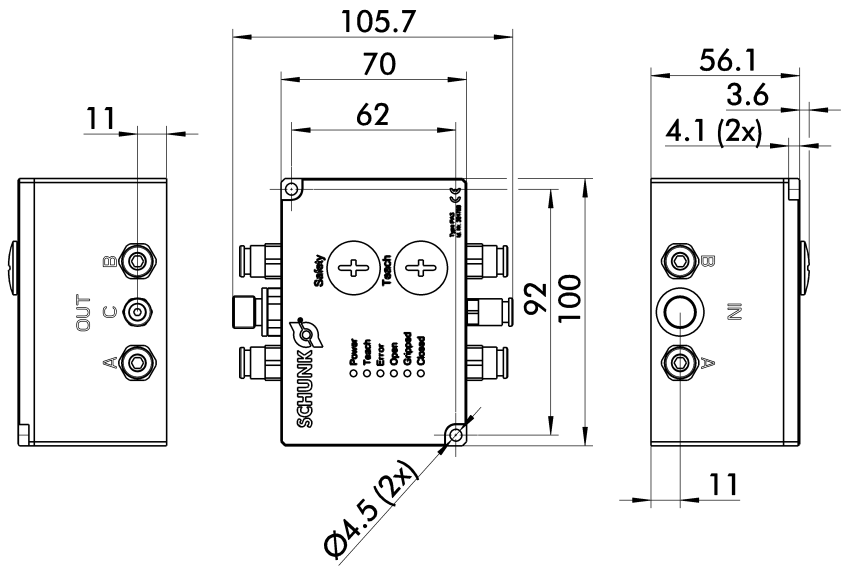


## AND valve

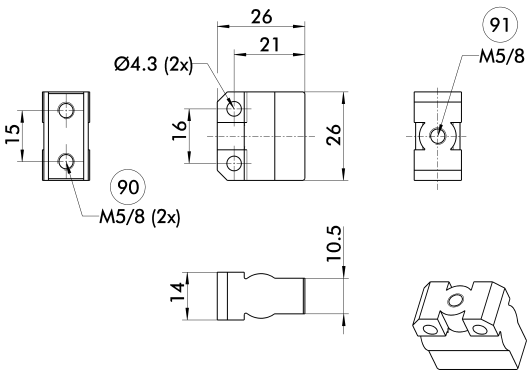


(90) Input
(91) Output

Two additional bore holes in the piston chamber of the monitored components are connected with the AND valve. The resulting pressure signal is sent to the PA3.

# Finger Blanks and Intermediate Jaws



## Gripper Jaws

of aluminum or steel for customized subsequent machining



## Function description

Finger and jaw blanks already feature the mechanical interface to the gripper.
he customer only needs to machine the blank to the specific workpiece geometry.

## Your advantages and benefits

**Matching finger blanks**
for common gripper types

**Easy mounting**
thanks to standardized drilling pattern

**High replacement accuracy**
thanks to centering

**Clamping contour**
can be machined rapidly and easily

**Rapid availability**

**Aluminum finger blanks**
of high-strength aluminum alloy

**Steel finger blanks**
of hardenable steel

## Application example




### Area of application

variable clamping tasks, for sensitive workpieces

1 KTG 2-Finger Parallel Gripper

2 RB Finger Blanks for KTG

## General information

### Scope of delivery

including screws

## Notes

To suit your special requirements, we will be glad to supply low-cost special solutions, workpiece-specific gripper fingers, attachment plates and complete units. Please ask for details.

# ABR-plus/SBR-plus





## Technical data

| Description | ID | Items per ID | Weight [kg] | Material |
|---|---|---|---|---|
| ABR-plus 40 | 0300008 | 1 | 0.02 | Aluminum |
| SBR-plus 40 | 0300018 | 1 | 0.055 | 16 MnCr 5 |
| ABR-plus 50 | 0300009 | 1 | 0.045 | Aluminum |
| SBR-plus 50 | 0300019 | 1 | 0.125 | 16 MnCr 5 |
| ABR-plus 64 | 0300010 | 1 | 0.093 | Aluminum |
| SBR-plus 64 | 0300020 | 1 | 0.26 | 16 MnCr 5 |
| ABR-plus 80 | 0300011 | 1 | 0.162 | Aluminum |
| SBR-plus 80 | 0300021 | 1 | 0.455 | 16 MnCr 5 |
| ABR-plus 100 | 0300012 | 1 | 0.358 | Aluminum |
| SBR-plus 100 | 0300022 | 1 | 1.004 | 16 MnCr 5 |
| ABR-plus 125 | 0300013 | 1 | 0.638 | Aluminum |
| SBR-plus 125 | 0300023 | 1 | 1.788 | 16 MnCr 5 |
| ABR-plus 160 | 0300014 | 1 | 1.291 | Aluminum |
| SBR-plus 160 | 0300024 | 1 | 3.45 | 16 MnCr 5 |
| ABR-plus 200 | 0300015 | 1 | 2.191 | Aluminum |
| SBR-plus 200 | 0300025 | 1 | 6.144 | 16 MnCr 5 |
| SBR-plus 240 | 0300027 | 1 | 7.98 | 16 MnCr 5 |
| ABR-plus 240 | 0300017 | 1 | 2.84 | Aluminum |
| ABR-plus 300 | 0300016 | 1 | 3.236 | Aluminum |
| SBR-plus 300 | 0300026 | 1 | 9.072 | 16 MnCr 5 |

## ABR-plus/SBR-plus 40

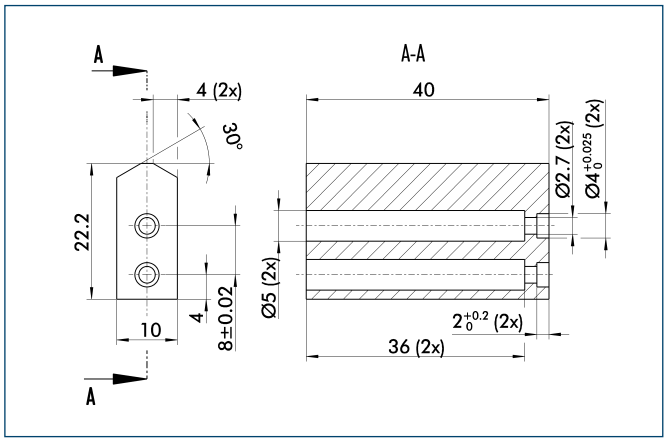


## ABR-plus/SBR-plus 50

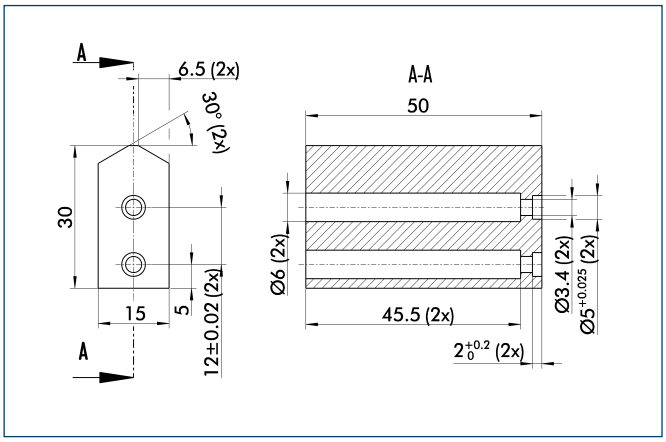


## ABR-plus/SBR-plus 64

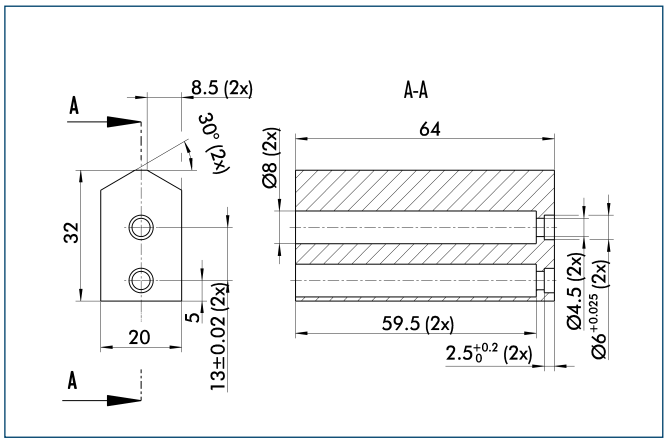


## ABR-plus/SBR-plus 80

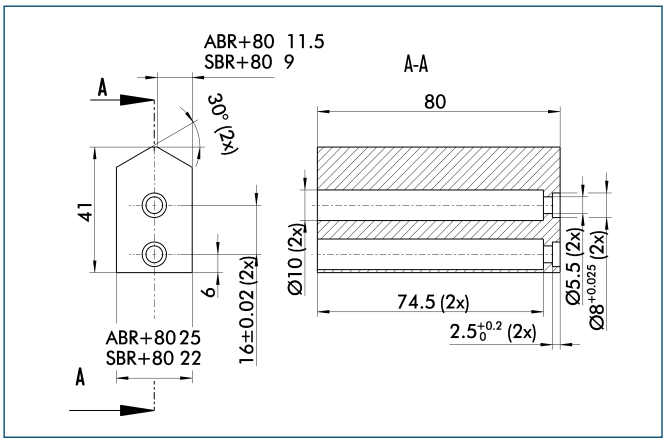

## ABR-plus/SBR-plus 100

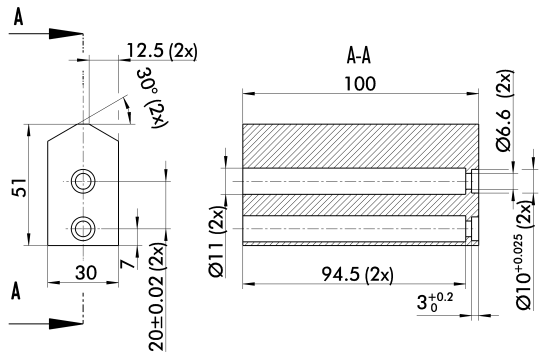


## ABR-plus/SBR-plus 125

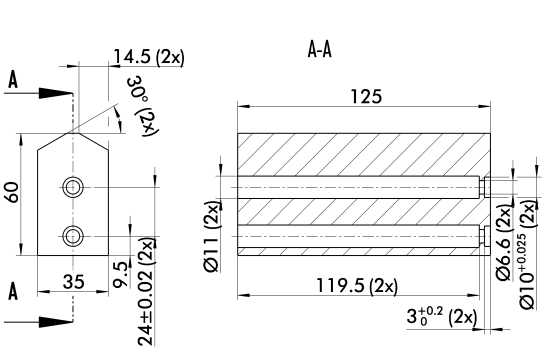


## ABR-plus/SBR-plus 160

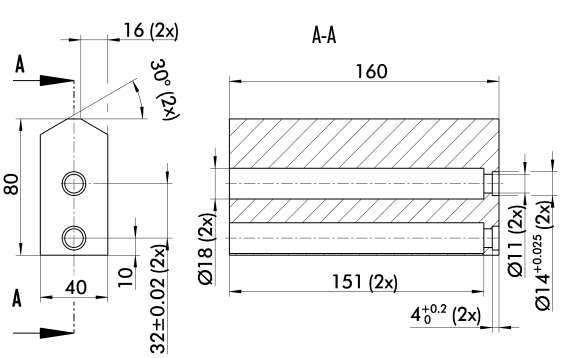


## ABR-plus/SBR-plus 200

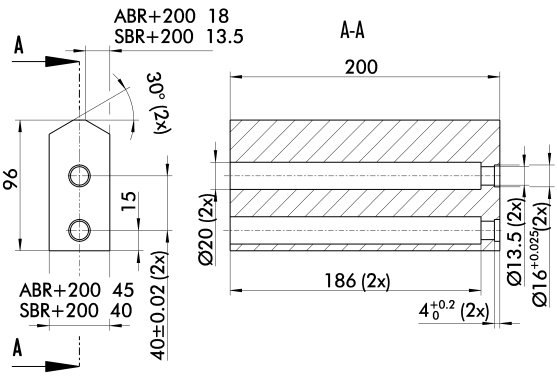

## ABR-plus/SBR-plus 240

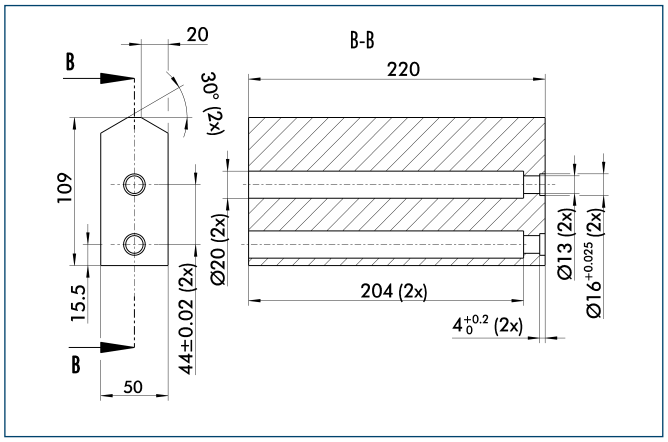


## ABR-plus/SBR-plus 300

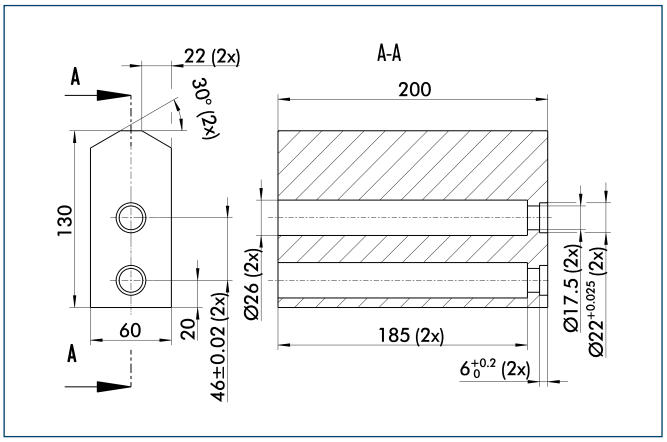

# ABR for MPG



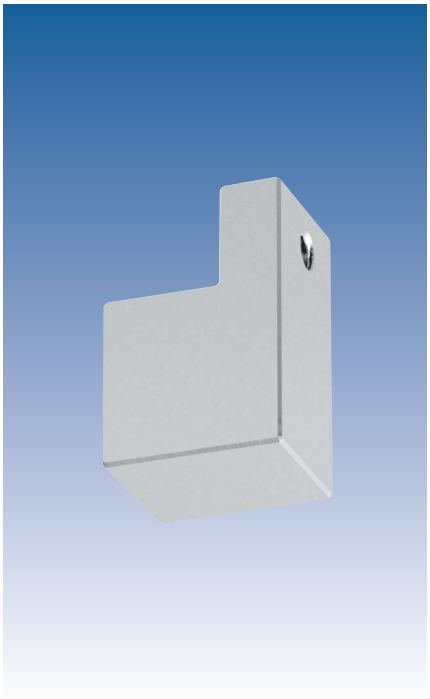

## Technical data

| Description | ID | Items per ID | Weight [kg] | Material |
|---|---|---|---|---|
| ABR 20 | 0340210 | 2 | 0.006 | Aluminum |
| ABR 25 | 0340211 | 2 | 0.008 | Aluminum |
| ABR 32 | 0340212 | 2 | 0.016 | Aluminum |
| ABR 40 | 0340213 | 2 | 0.031 | Aluminum |
| ABR 50 | 0340214 | 2 | 0.068 | Aluminum |
| ABR 64 | 0340215 | 2 | 0.12 | Aluminum |

## ABR 20

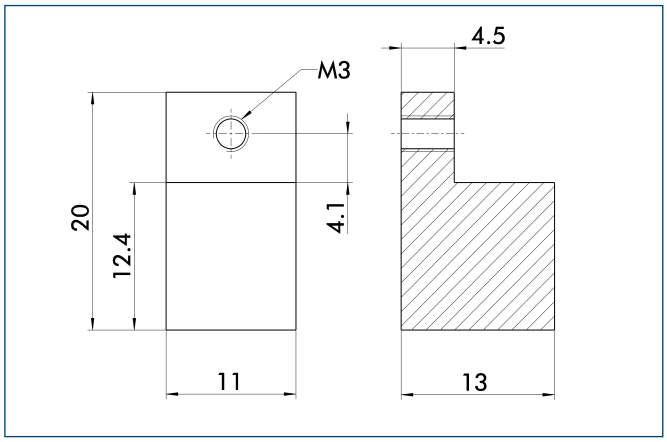


## ABR 25

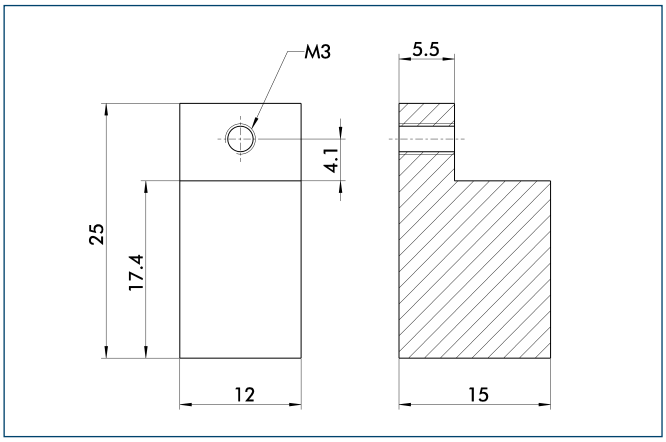


## ABR 32

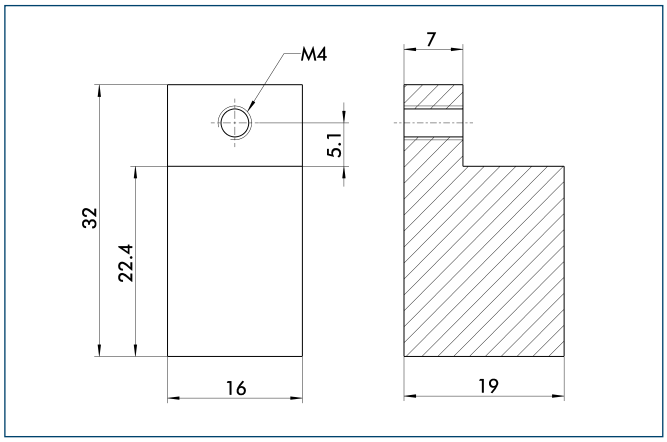


## ABR 40

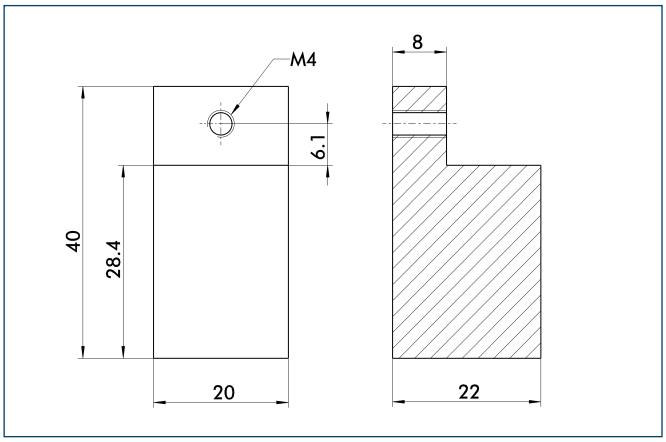


## ABR 50

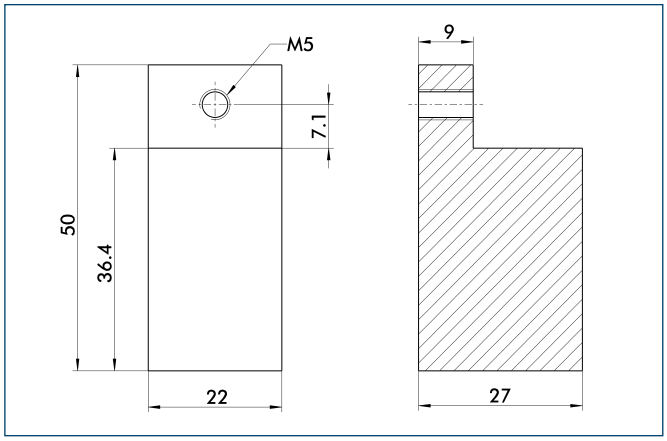


## ABR 64

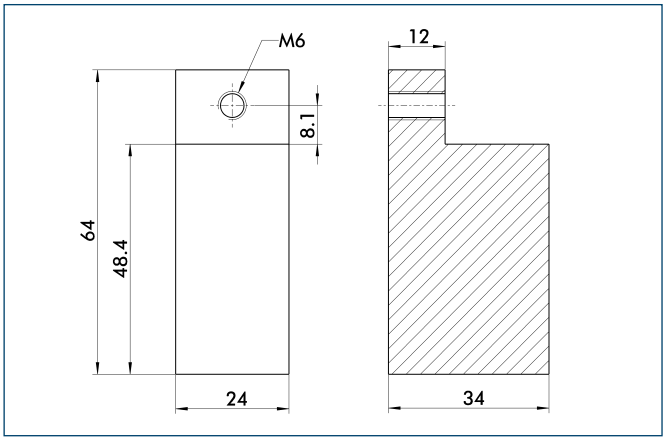

# ABR for PG



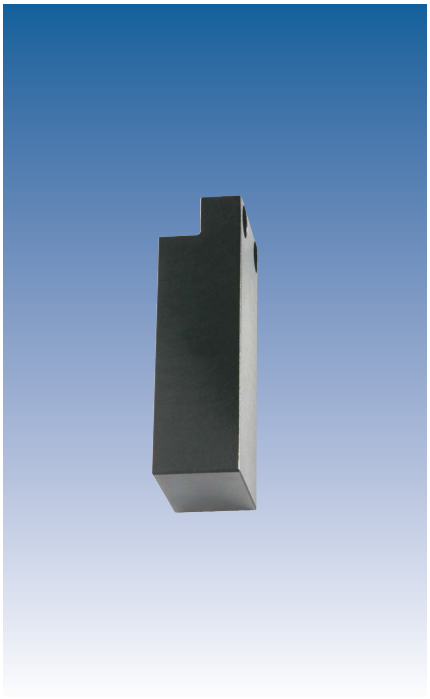

## Technical data

| Description | ID | Items per ID | Weight [kg] | Material |
|---|---|---|---|---|
| ABR-PG 70 | 0307850 | 1 | 0.12 | Aluminum |

## ABR 70 for PG 70

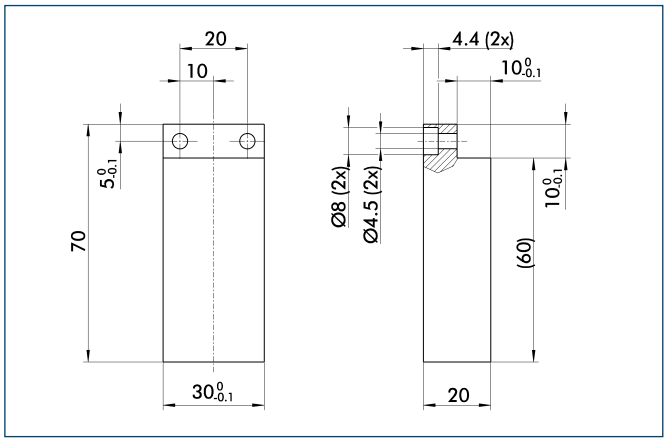

# ABR for MPZ





## Technical data

| Description | ID | Items per ID | Weight [kg] | Material |
|---|---|---|---|---|
| ABR 30 | **0340519** | 3 | 0.08 | Aluminum |
| ABR 38 | **0340529** | 3 | 0.015 | Aluminum |
| ABR 45 | **0340539** | 3 | 0.024 | Aluminum |

## ABR 30

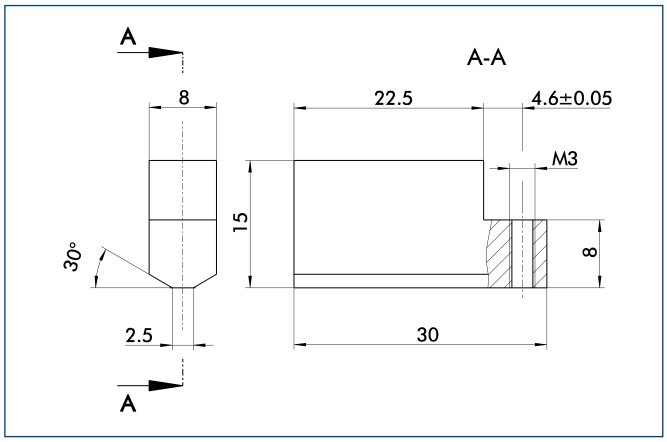


## ABR 38

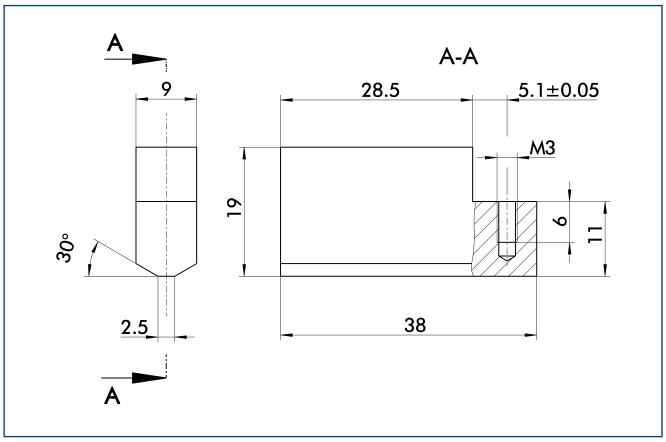


## ABR 45

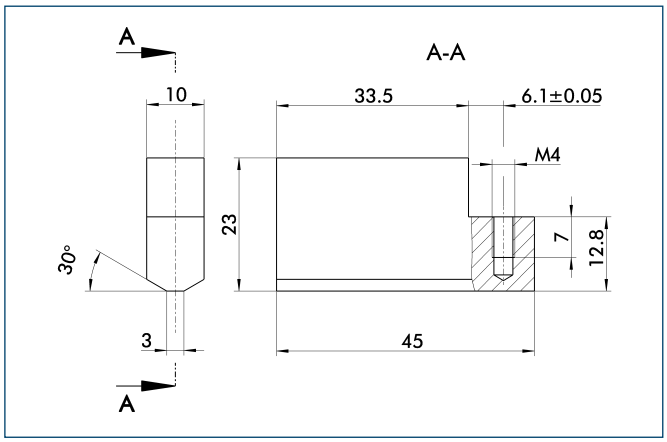

# RB for KTG





## Technical data

| Description | ID | Items per ID | Weight [kg] | Material |
|---|---|---|---|---|
| RB 50 | 0300280 | 2 | 0.065 | Aluminum |

## RB 50

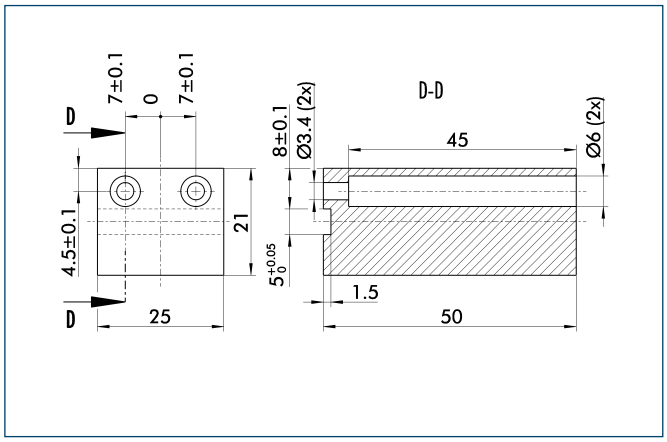

# RB for KGG



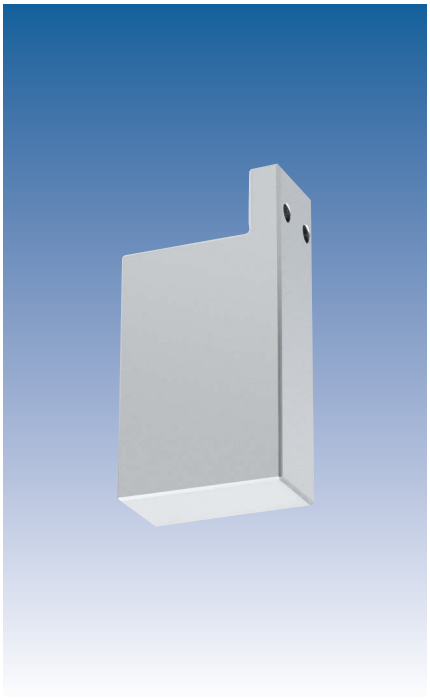

## Technical data

| Description | ID | Items per ID | Weight [kg] | Material |
|---|---|---|---|---|
| RB 80 | **0303089** | 2 | 0.16 | Aluminum |
| RB 100 | **0303090** | 2 | 0.26 | Aluminum |
| RB 140 | **0303091** | 2 | 0.467 | Aluminum |
| RB 220 | **0300286** | 2 | 1.354 | Aluminum |
| RB 280 | **0300287** | 2 | 3.102 | Aluminum |

## RB 80

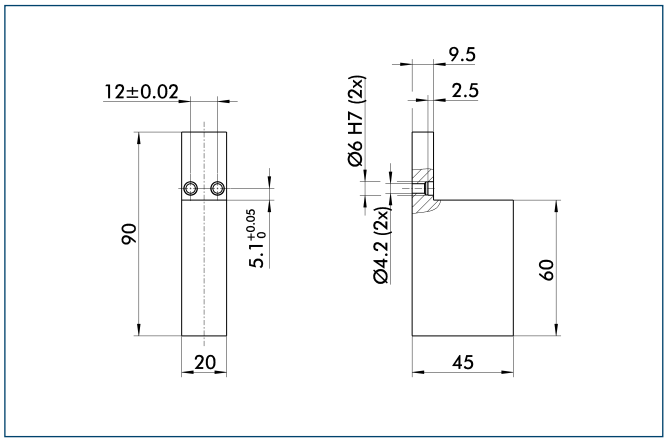


## RB 100

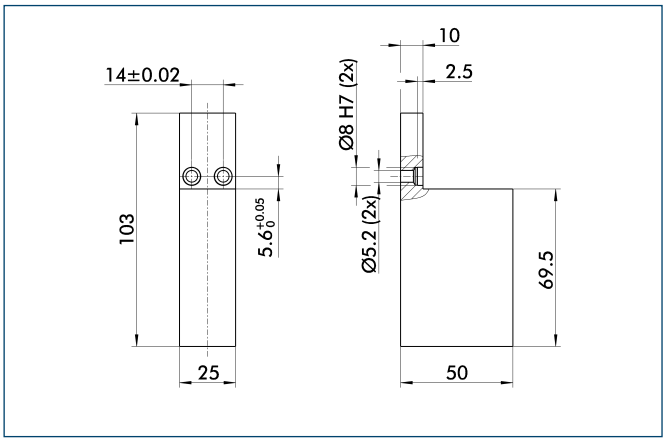


## RB 140

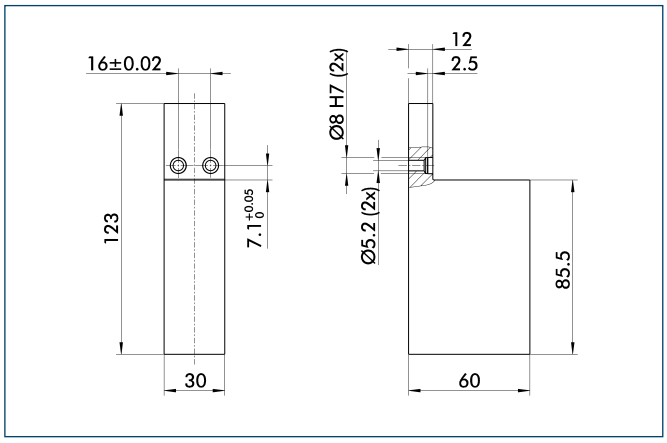


## RB 220

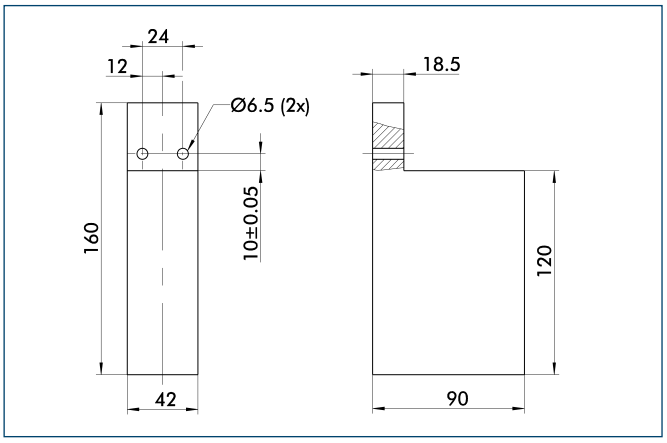


## RB 280

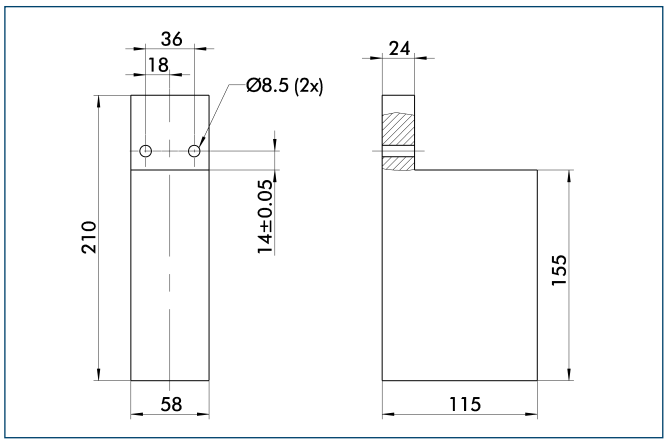

# ZBH for PFH





## Technical data

| Description | ID | Items per ID | Weight [kg] | Material |
|---|---|---|---|---|
| ZBH 30 | **0300220** | 2 | 0.66 | 16 MnCr 5 |
| ZBH 40 | **0300221** | 2 | 0.89 | 16 MnCr 5 |
| ZBH 50 | **0300222** | 2 | 1.64 | 16 MnCr 5 |

## ZBH 30 for PFH 30

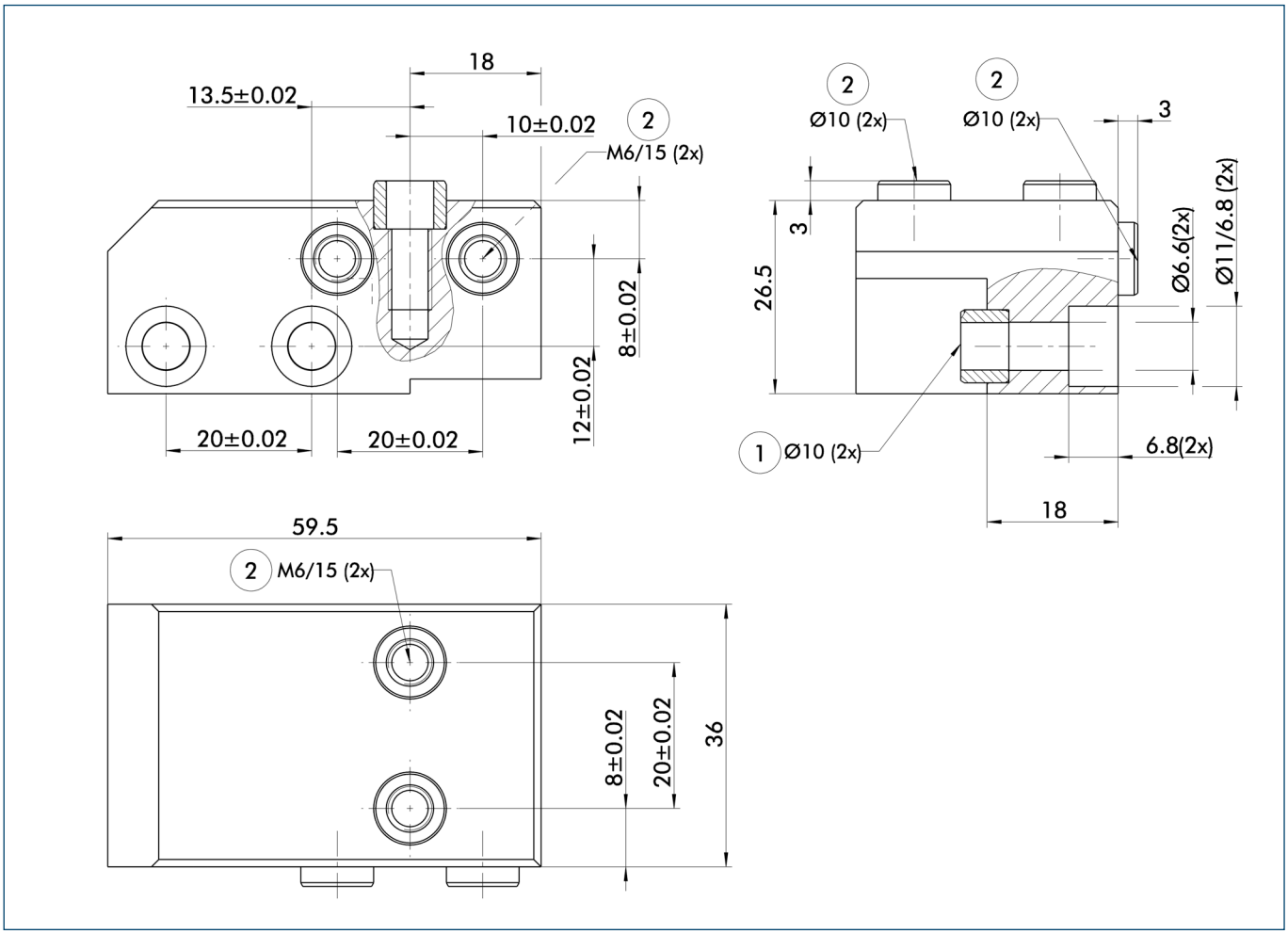


① Gripper connection
② Finger connection

## ZBH 40 for PFH 40

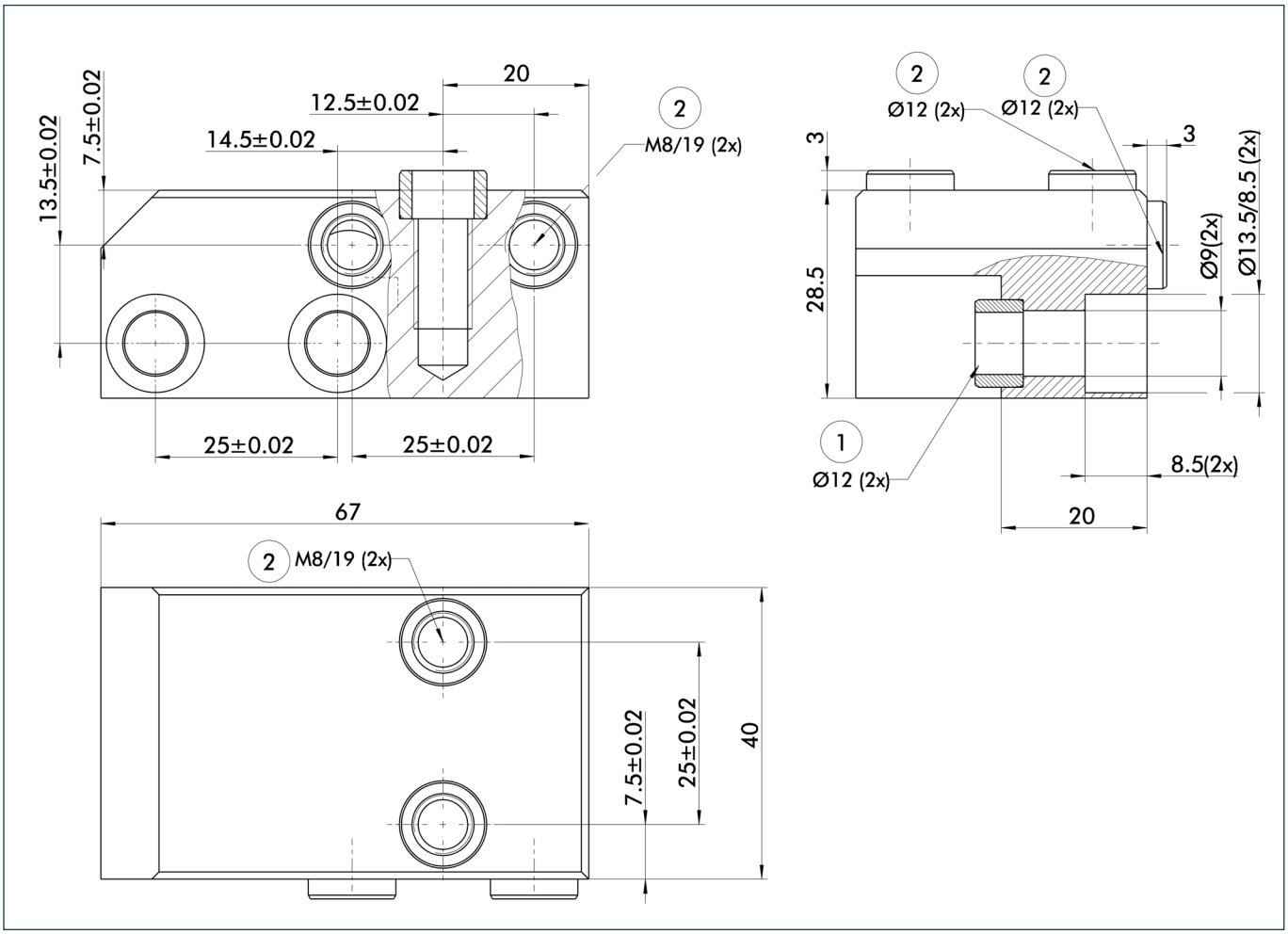


① Gripper connection
② Finger connection

## ZBH 50 for PFH 50

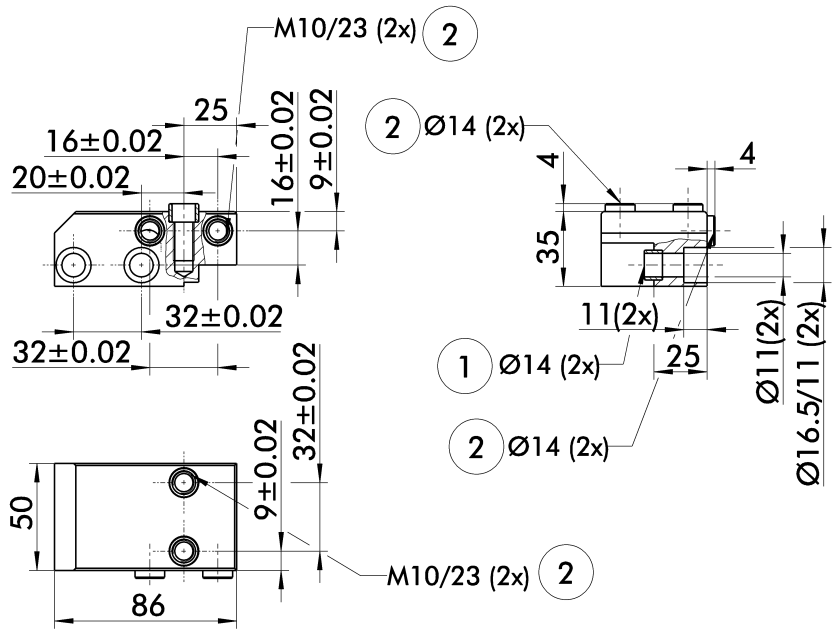


① Gripper connection
② Finger connection

## Plastic Inserts

for gentle clamping of sensitive workpieces and for increasing the static friction.



## Function description

The plastic inserts are used in gripper top jaws at the point contacting the workpiece. The surface helps to grip the workpiece securely and with low distortion.

## Your advantages and benefits

**High friction coefficient of approx. 0.3 - 0.4**
thanks to the use of glass-fiber-reinforced plastic

**Gentle clamping**
of the most delicate surfaces, no clamping marks, excellent for ground or surface-treated parts

**Low-cost system**
through replaceable clamping inserts

**High stability**
through the aluminum support structure of the supporting jaw

**Extensive workpiece locating surface**
for low-deformation clamping of machined parts

## Application example




### Area of application

variable clamping tasks, for sensitive workpieces

1 Gripper Finger

2 Clamping Insert Quentes

## General information

**Material**
glass-fiber-reinforced plastic

**Warranty**
24 months

# Quentes





## Technical data

| Description | ID | Weight | Material |
|---|---|---|---|
| Quentes 5 | **0300760** | 0.13 kg | glass-fiber-reinforced plastic |
| Quentes 10 | **0300761** | 0.28 kg | glass-fiber-reinforced plastic |

## Quentes 5

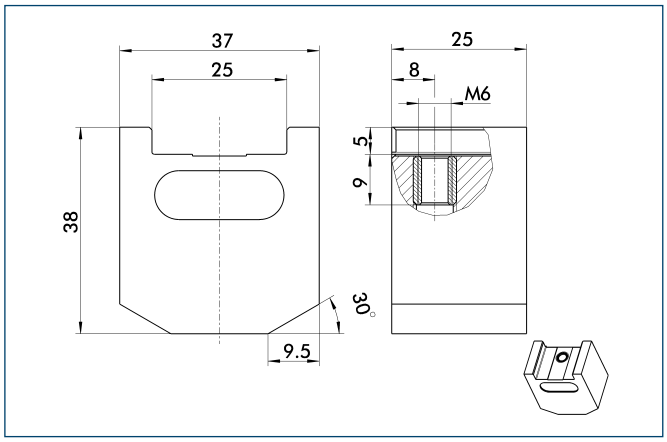


## Quentes 10

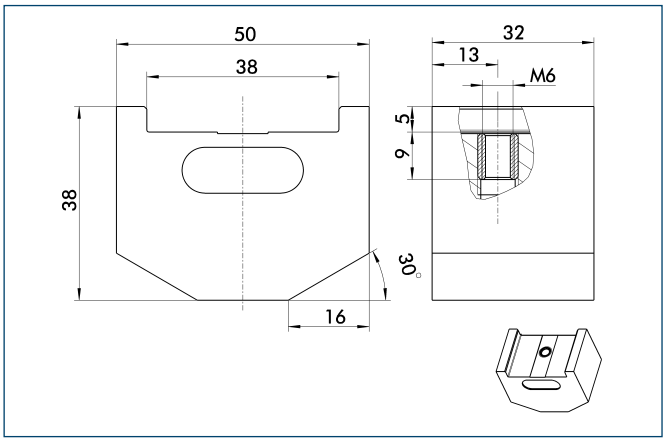

## Hard Metal Clamping Inserts

Inserts for increasing the friction on the contact surface between the gripper fingers and the workpiece.



## Function description

The HM clamping inserts are used in gripper top jaws at the point contacting the workpiece. The angular, rough surface helps to grip the workpiece securely.

## Your advantages and benefits

**Increase of the friction factor**
therefore requiring less gripping force

**Various sizes available**

**Fast change possible**

**High load bearing capacity**

## Application example

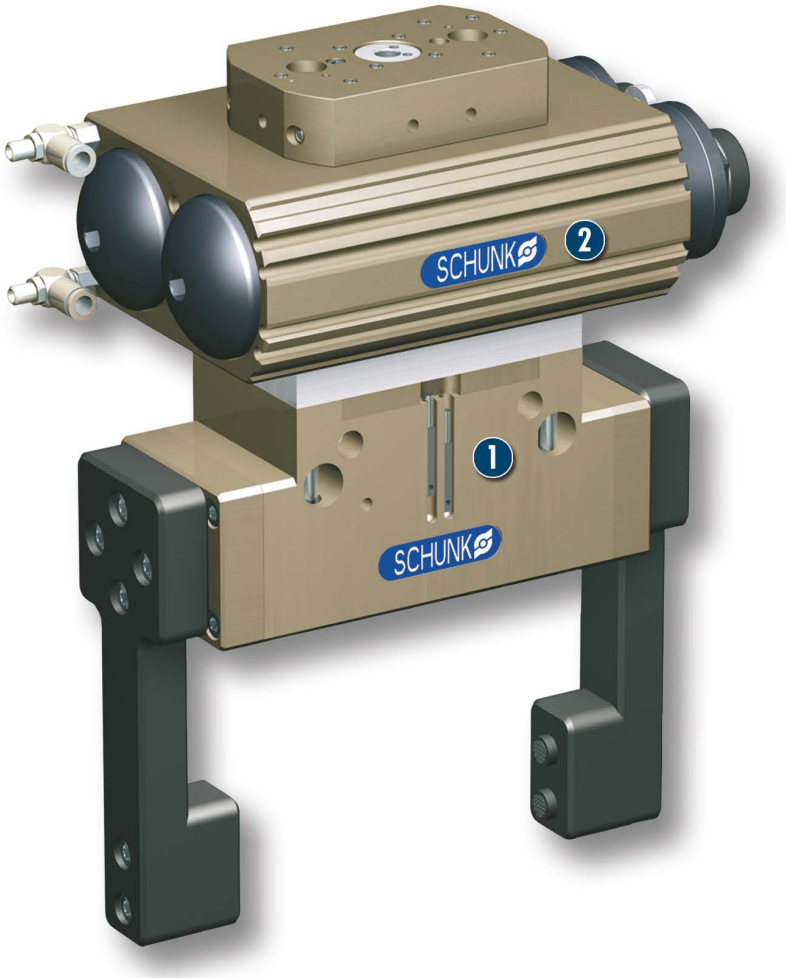


1 DPG-plus 125 2-Finger Parallel Gripper, with top fingers equipped with carbide clamping inserts

2 SRU 35.1-180-3-4 Rotary Actuator in sealed IP67 version

## Area of application

variable clamping tasks, for sensitive workpieces

## General information

**Material**
Steel, hardened

**Warranty**
24 months

## Notes

The HM clamping inserts should not be used if scratch marks are not desired on the workpiece.



## Technical data

| Description | ID | Weight | Form | Material |
|---|---|---|---|---|
| HM 6 | **0300780** | 0.002 kg | Cylinder | Carbide |
| HM 8 | **0300781** | 0.004 kg | Cylinder | Carbide |
| HM 10 | **0300782** | 0.006 kg | Cylinder | Carbide |
| HM 11 | **0300783** | 0.01 kg | Cylinder | Carbide |
| HM 12 | **0300784** | 0.012 kg | Cylinder | Carbide |
| HM 13 | **0300785** | 0.016 kg | Cylinder | Carbide |
| HM 14 | **0300786** | 0.022 kg | Cylinder | Carbide |
| HM 15 | **0300787** | 0.012 kg | Cylinder | Carbide |

## HM 6

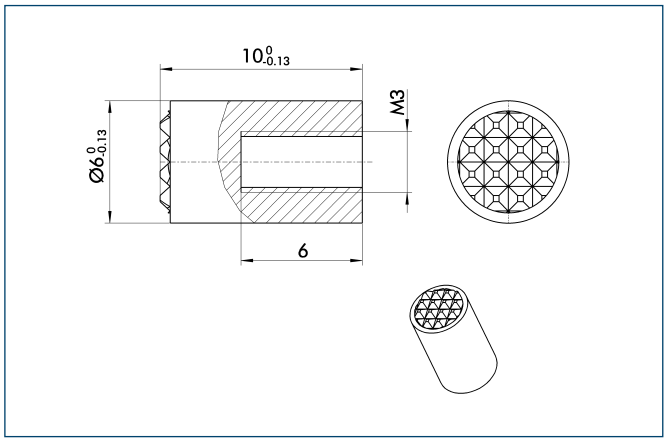


## HM 8

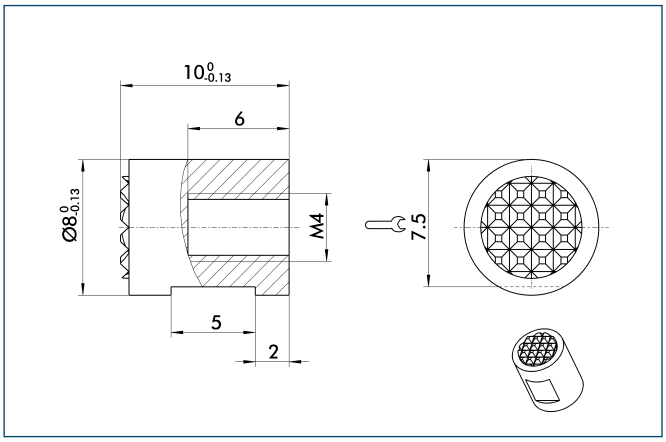


## HM 10

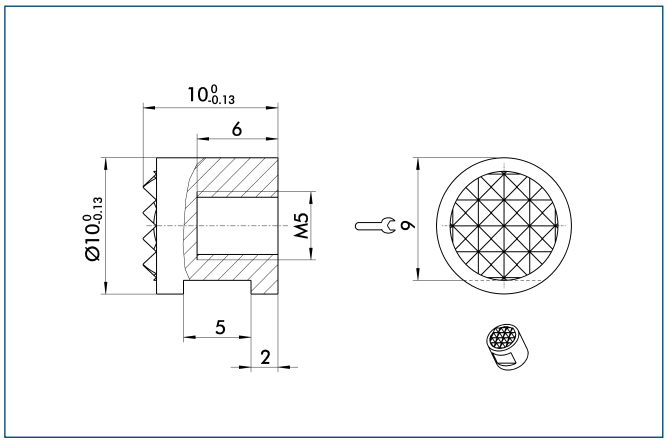


## HM 11

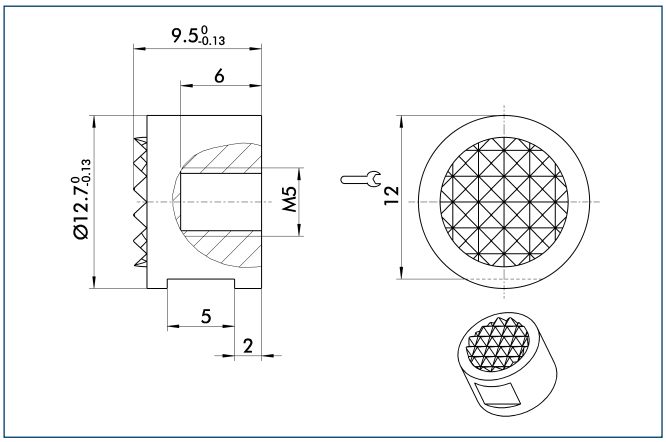

## HM 12

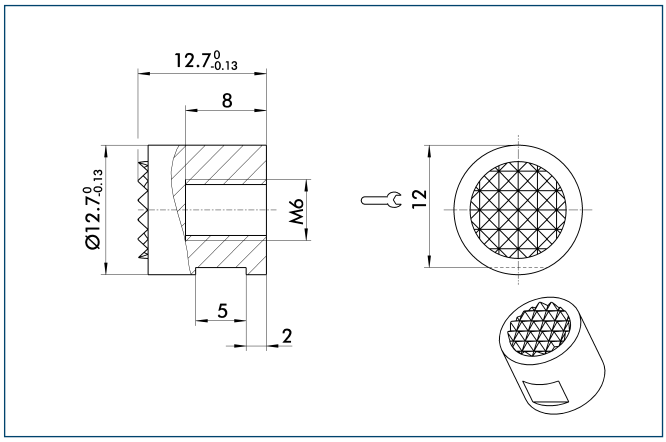


## HM 13

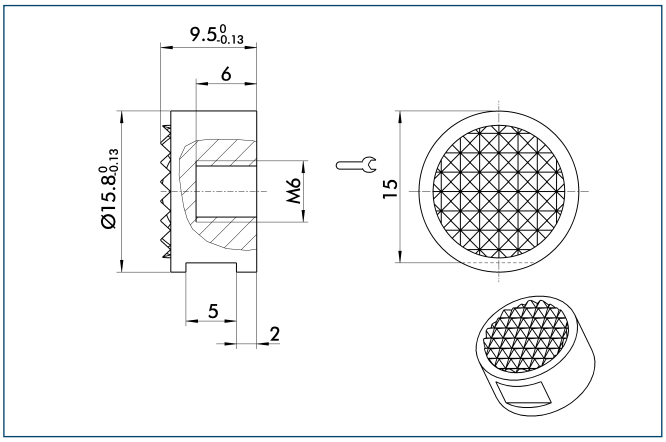


## HM 14

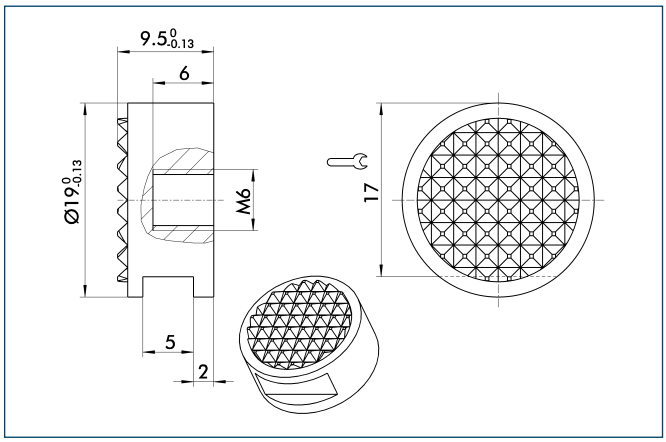


## HM 15

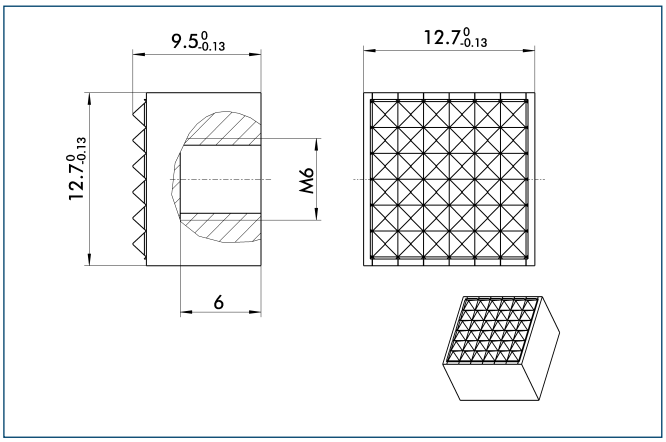

## HKI Gripper Pads

Gripper Pads made of soft plastic for surface-friendly gripping of workpieces with simultaneous increase of friction forces.

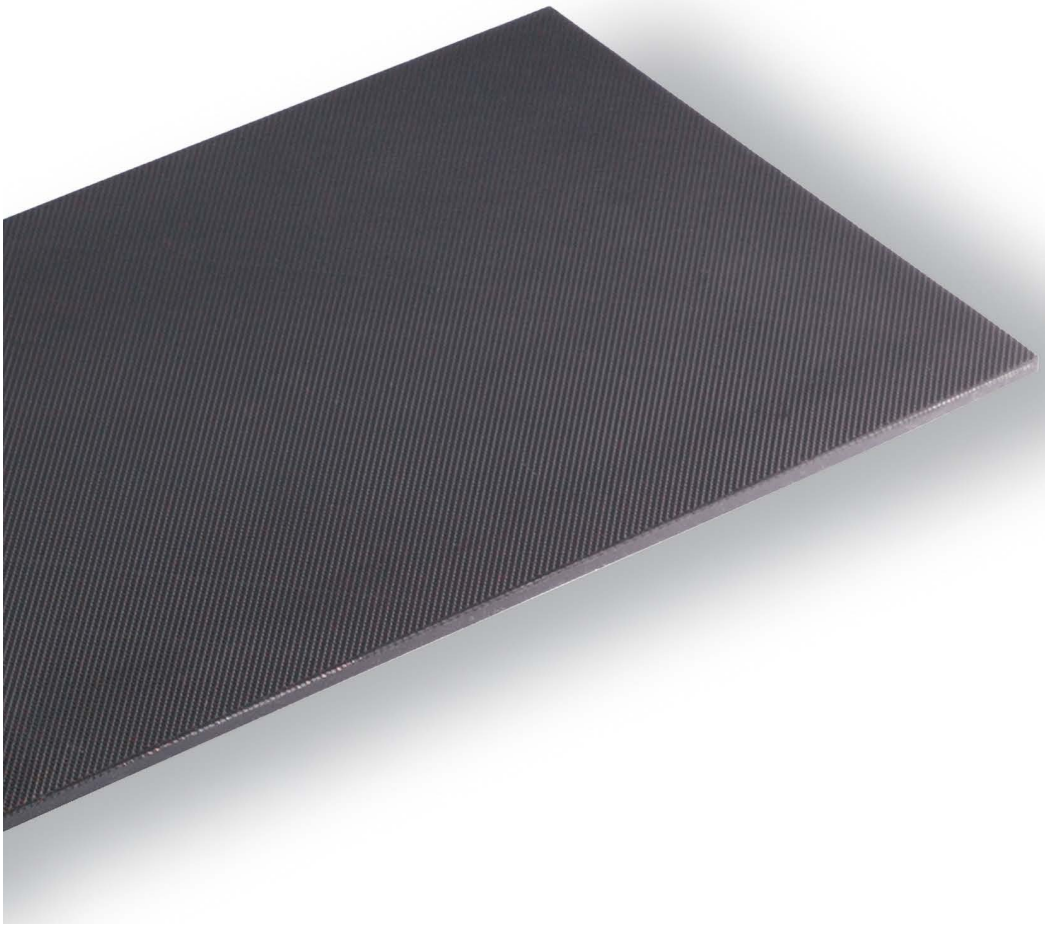

## Function description

The gripper pads are attached to the surface of the gripper fingers that contact the workpiece.

## Your advantages and benefits

**High friction coefficient of approx. 0.3 - 0.4**
for higher workpiece weights with the same gripping force

**Easy assembly**
through gluing or screws

**Pliable surface**
for surface-friendly gripping

**Resistant against oil**
for use in difficult environments

## Area of application

variable clamping tasks, for sensitive workpieces

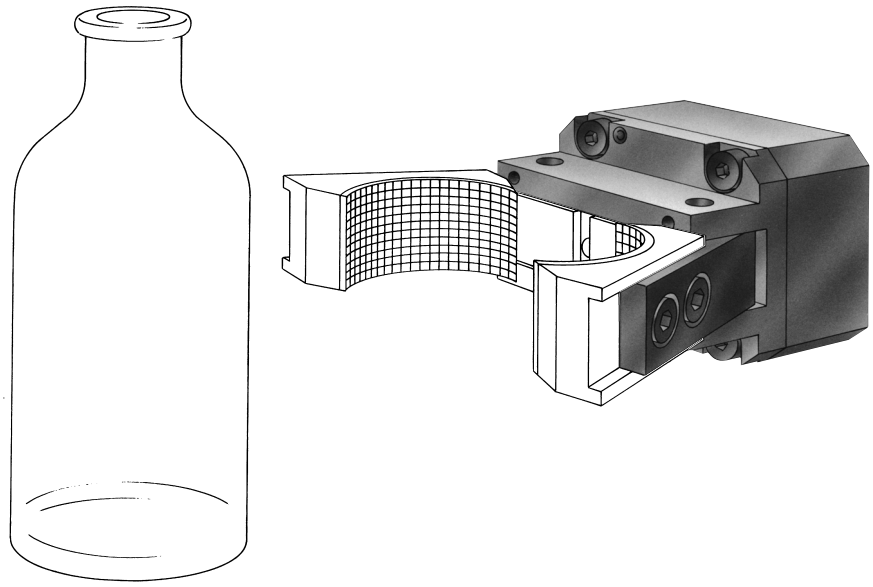

## General information

**Warranty**

24 months

## Notes

The HKI gripper pads are delivered as plates.
Blanks can be ordered as special products.

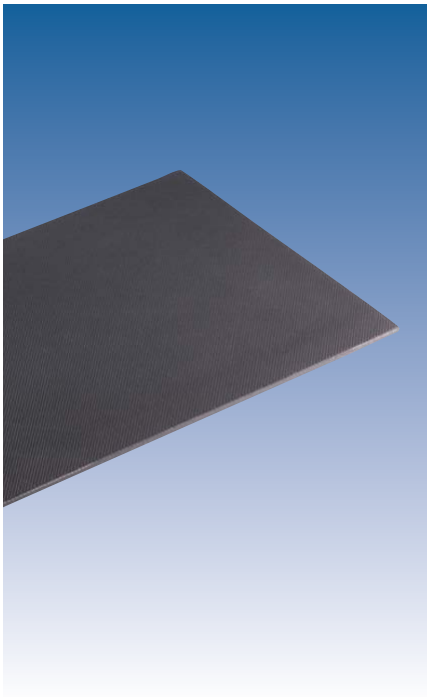

## Technical data

| Description | | HKI 1E | HKI 1A | HKI 1S |
|---|---|---|---|---|
| ID | | 0324160 | 0324161 | 0324162 |
| Length | [mm] | 300.0 | 300.0 | 300.0 |
| Width | [mm] | 150.0 | 150.0 | 150.0 |
| Thickness | [mm] | | 6.3 | 13.5 |
| Elastomer | | NBR Perbunan | NBR Perbunan | NBR Perbunan |
| Hard elastomer | [Shore] | 60.0 | 60.0 | 60.0 |
| Hardness tolerance +/- | [Shore] | 5.0 | 5.0 | 5.0 |
| Base plate present | | No | Yes | Yes |
| Material of base plate | | Elastomer | Aluminum | Stainless steel |
| Min. ambient temperature | [°C] | -30.0 | -30.0 | -30.0 |
| Max. ambient temperature | [°C] | 100.0 | 100.0 | 100.0 |

## HKI 1E

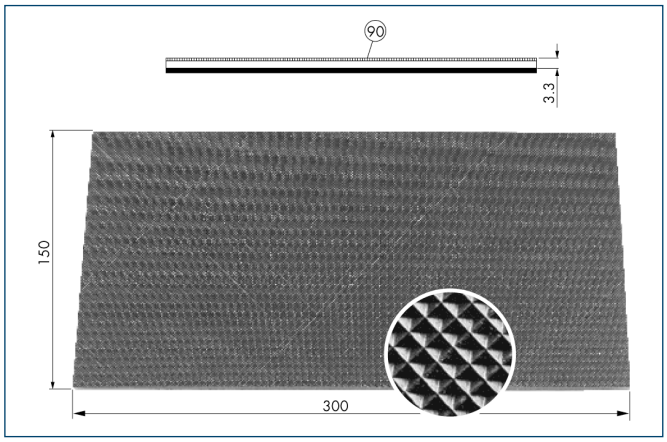


90 Elastomer pads

## HKI 1A

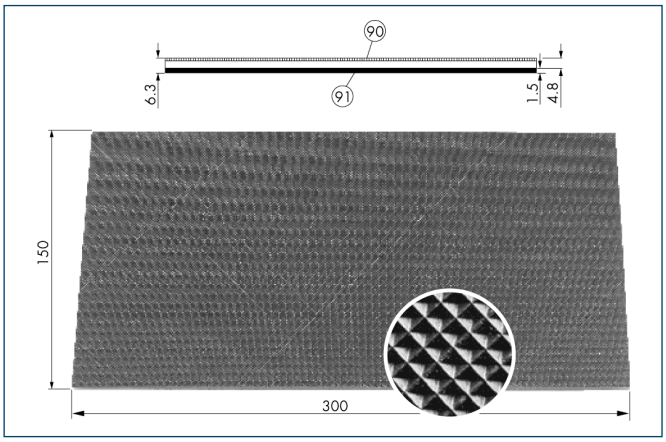


90 Elastomer pads
91 Aluminum base plate

## HKI 1S

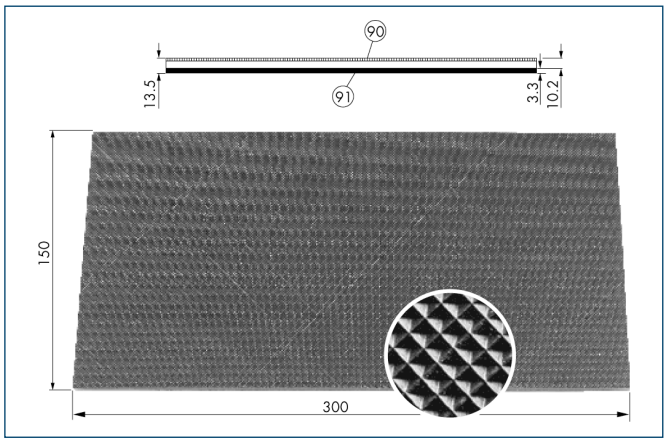


90 Elastomer pads
91 Stainless steel base plate

## Quick-change Jaw System

The BSWS quick-change jaw system enables top jaws to be changed on the gripper manually and rapidly. An adapter (BSWS-A) and a base (BSWS-B) are required for each gripper jaw.
For a reverse assembly without height set-up, one adapter (BSWS-A) and a kit (BSWS-U) per gripper jaw are required. Another effect of the BSWS-U is, that there are no disturbing fastening bores in the finger contour.



## Functional description

The BSWS consists of a base, which is stationary fixed with the gripper, and two adapter pins, which are to be fastened at the top jaw, which is to be exchanged. The form-fit locking mechanics assures a fast exchange of the gripper fingers.

## Your advantages and benefits

**Universal application possibilities**
By using the BSWS, just one single gripper is necessary for various applications

**Manual jaw change via locking mechanics**
easy and fast for a high gripper flexibility

**Firm up to the maximum loadability of the base jaws**
by safe adaption and connection with screws

**Alternative possibility of inserting the locking bolt into the base jaws**
The exchangabilty and free choice of jaw design has no impact onto the infering contours.

## Application example




## Field of application

For handling of various components or frequent retrofitting of automated production lines in clean to dirty environments.
Caution: The locking surfaces must keep free of grease and oil!

1 Quick-change Jaw System BSWS

2 Gripper jaws ABR-plus

3 2-Finger Parallel Grippers PGN-plus

## General information

**Housing material**
Aluminum alloy, hard-anodized

**Locking mechanism material**
Steel

**Warranty**
24 months (details, general terms and conditions and operation manuals can be downloaded under www.schunk.com)

**Sizes**
suitable for the sizes 50 to 300 of the series PGN-plus, PZN-plus and many other grippers

**Scope of delivery**
Base and adapter separately in different sizes

## Options and special information

**BSWS-U: Reversed assembly without additonal height**
If the additional attachment height of the BSWS system should have a negative impact, it is possible to fasten the BSWS adapter in the base jaws of the gripper with screws. Then the chnging system is more compact in height. The locking mechanism will be integrated into the top jaw.
As another effect, there are no disturbing fastening bores at your finger contour. Please contact us for discussing this matter.



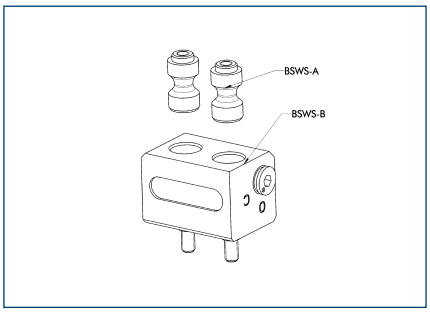


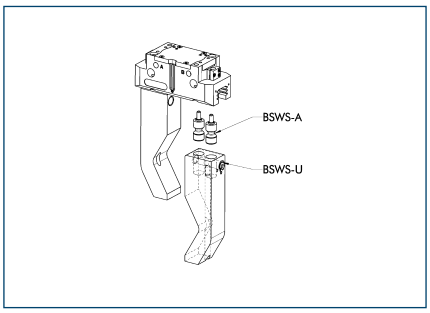


## Sectional diagram

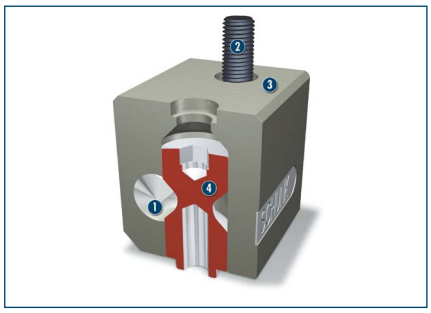


1. **Locking mechanics**
   powerful and rigid by positive locking
2. **Fastened with screws**
   towards the gripper base jaw
3. **Base BSWS-B**
   the Quick-change Jaw System
4. **Adapter plate with BSWS-A**
   to be fastened at the top jaws which will be changed

## Technical data BSWS-A

| Description | | BSWS-A 50 | BSWS-A 64 | BSWS-A 80 | BSWS-A 100 | BSWS-A 125 | BSWS-A 160 | BSWS-A 200 | BSWS-A 240 |
|---|---|---|---|---|---|---|---|---|---|
| ID | | 0303020 | 0303022 | 0303024 | 0303026 | 0303028 | 0303030 | 0303032 | 0303034 |
| Weight | [kg] | 0.002 | 0.005 | 0.011 | 0.024 | 0.046 | 0.077 | 0.16 | 0.3 |
| Number of pins per ID | | 2 | 2 | 2 | 2 | 2 | 2 | 2 | 2 |
| Grid dimension | | 42CrMo4V | 42CrMo4V | 42CrMo4V | 42CrMo4V | 42CrMo4V | 42CrMo4V | 42CrMo4V | 42CrMo4V |

## Technical data BSWS-B

| Description | | BSWS-B 50 | BSWS-B 64 | BSWS-B 80 | BSWS-B 100 | BSWS-B 125 | BSWS-B 160 | BSWS-B 200 | BSWS-B 240 |
|---|---|---|---|---|---|---|---|---|---|
| ID | | 0303021 | 0303023 | 0303025 | 0303027 | 0303029 | 0303031 | 0303033 | 0303035 |
| Weight | [kg] | 0.02 | 0.04 | 0.08 | 0.1 | 0.27 | 0.48 | 0.9 | 1.5 |

## Technical data BSWS-U

| Description | BSWS-U 50 | BSWS-U 64 | BSWS-U 80 | BSWS-U 100 | BSWS-U 125 | BSWS-U 160 | BSWS-U 200 | BSWS-U 240 |
|---|---|---|---|---|---|---|---|---|
| ID | 0303040 | 0303041 | 0303042 | 0303043 | 0303044 | 0303045 | 0303046 | 0303047 |

ⓘ The level difference of the BSWS-B amounts to +/- 0.05 mm and the exchangeability of a top jaw in combination with a BSWS-A amounts to +/- 0.02 mm.

## BSWS 50

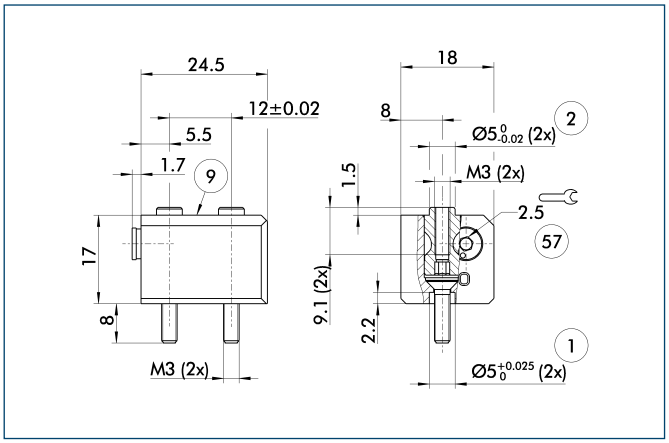


① Gripper connection
② Finger connection
⑨ For mounting screw connection diagram, see basic version
57 Locking

## BSWS-U 50

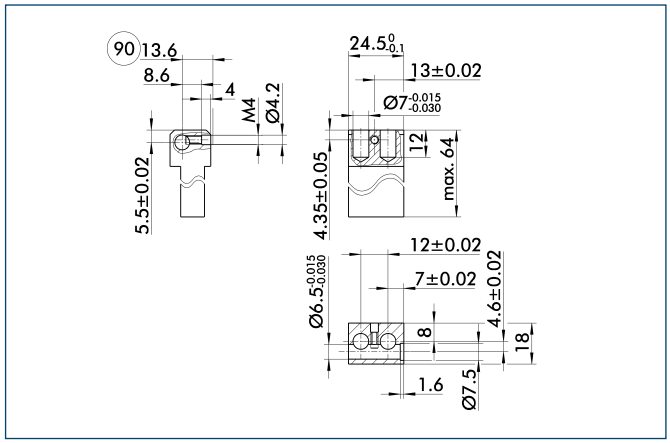


90 Length pressure piece

ⓘ The dimensions are finished dimensions - surfaces should be resistant to wear, e.g. hard alloy aluminum.

## BSWS 64

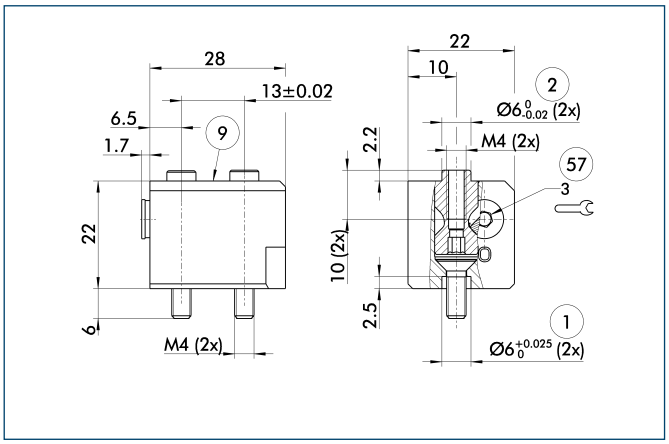


① Gripper connection
② Finger connection
⑨ For mounting screw connection diagram, see basic version
57 Locking

## BSWS-U 64

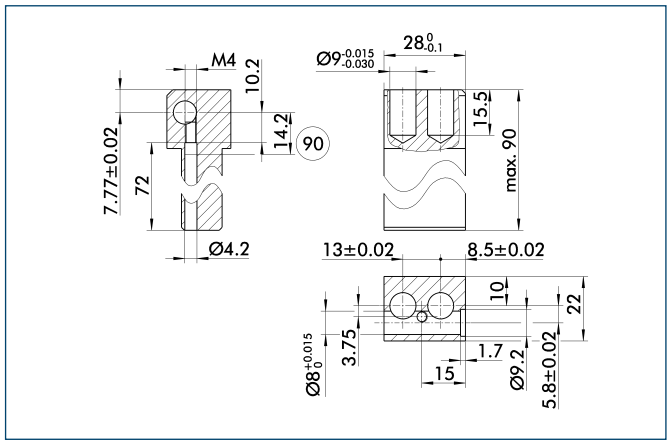


90 Length pressure piece

ⓘ The dimensions are finished dimensions - surfaces should be resistant to wear, e.g. hard alloy aluminum.

## BSWS 80

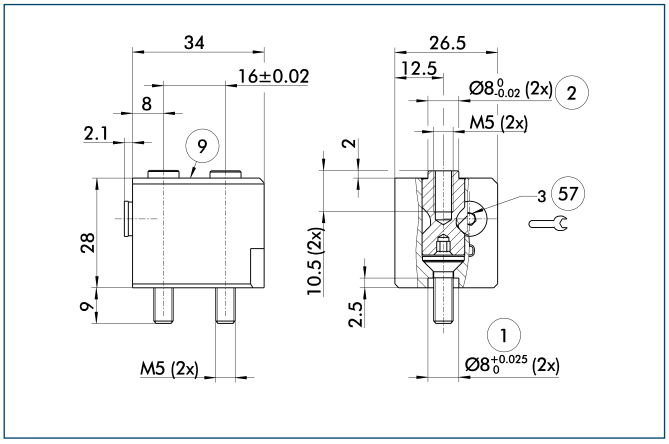


① Gripper connection
② Finger connection
⑨ For mounting screw connection diagram, see basic version
57 Locking

## BSWS-U 80

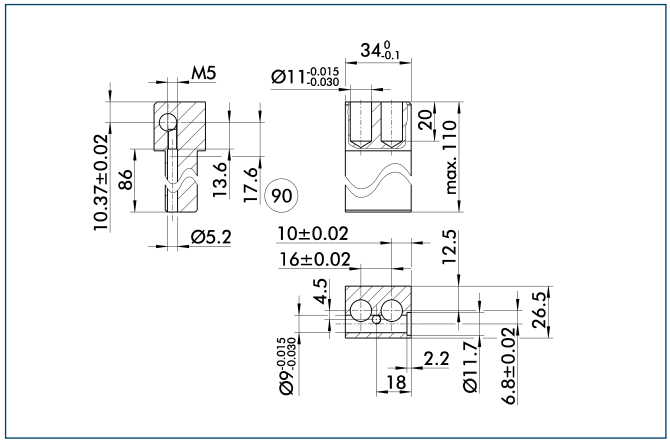


90 Length pressure piece

ⓘ The dimensions are finished dimensions - surfaces should be resistant to wear, e.g. hard alloy aluminum.

## BSWS 100

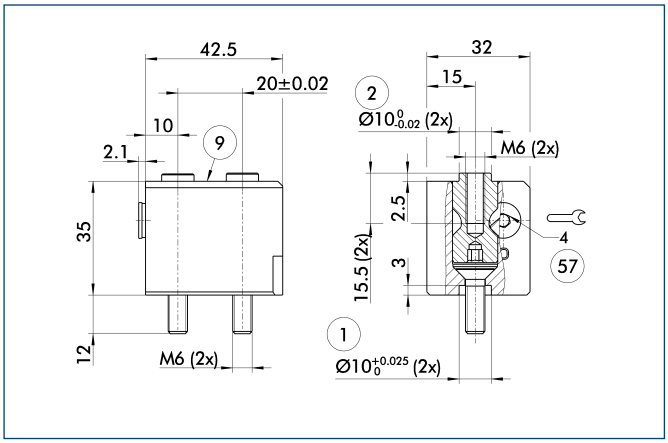


① Gripper connection
② Finger connection
⑨ For mounting screw connection diagram, see basic version
57 Locking

## BSWS-U 100

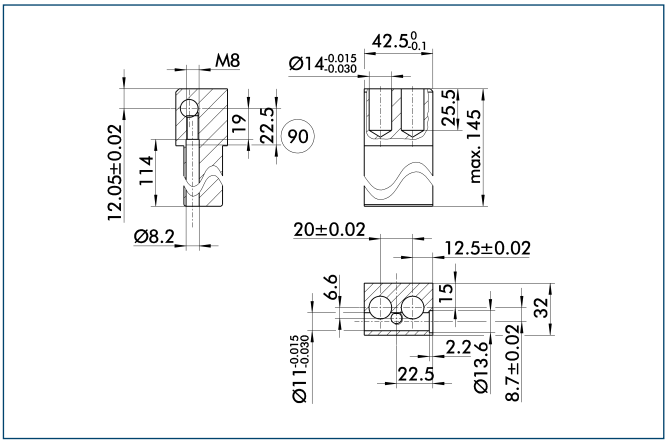


90 Length pressure piece

ⓘ The dimensions are finished dimensions - surfaces should be resistant to wear, e.g. hard alloy aluminum.

## BSWS 125

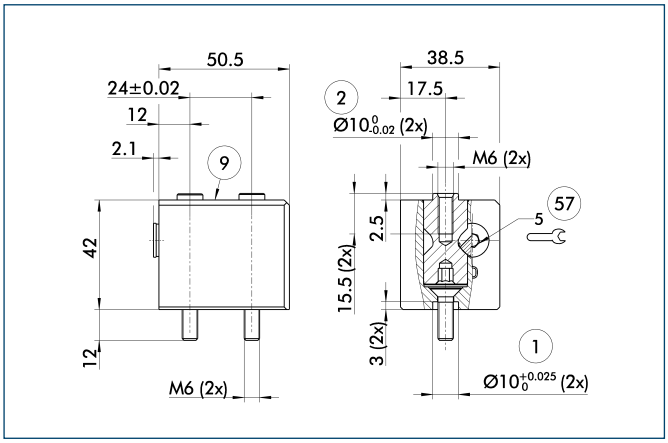


① Gripper connection
② Finger connection
⑨ For mounting screw connection diagram, see basic version
57 Locking

## BSWS-U 125

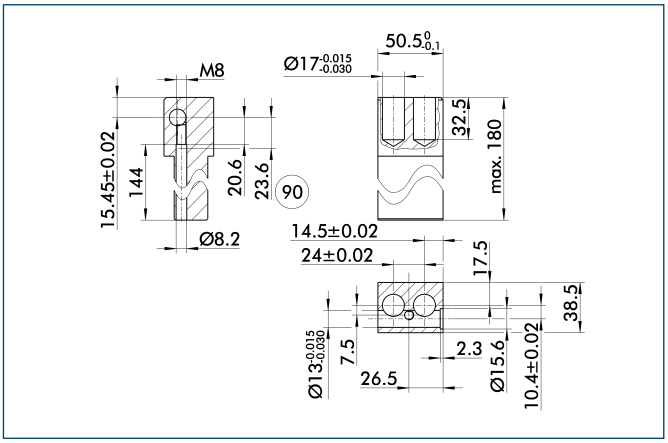


90 Length pressure piece

ⓘ The dimensions are finished dimensions - surfaces should be resistant to wear, e.g. hard alloy aluminum.

## BSWS 160

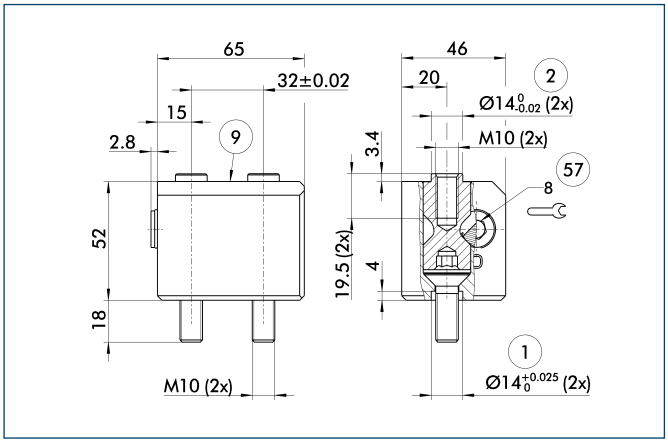


① Gripper connection
② Finger connection
⑨ For mounting screw connection diagram, see basic version
57 Locking

## BSWS-U 160

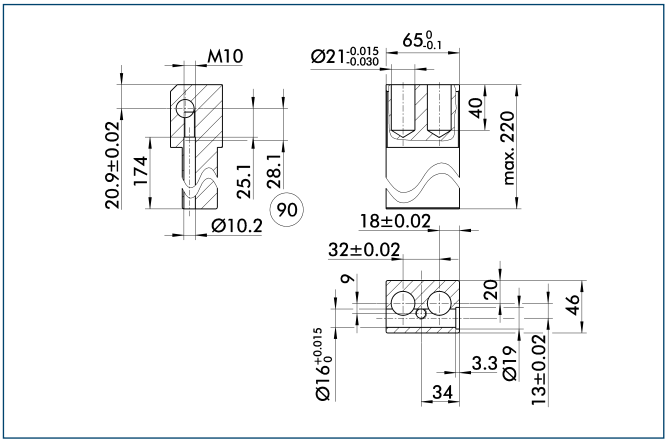


90 Length pressure piece

ⓘ The dimensions are finished dimensions - surfaces should be resistant to wear, e.g. hard alloy aluminum.

## BSWS 200

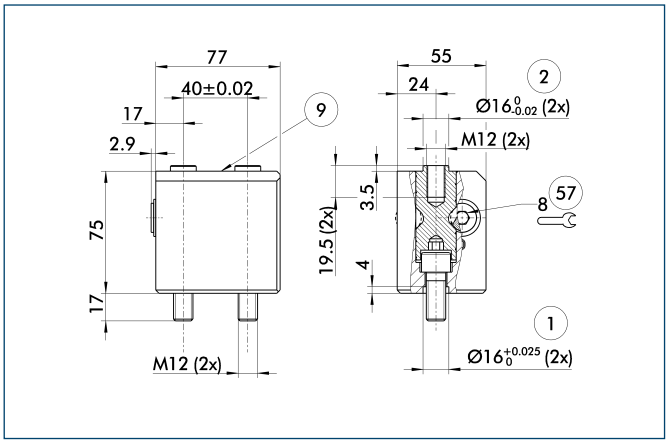


① Gripper connection
② Finger connection
⑨ For mounting screw connection diagram, see basic version
57 Locking

## BSWS-U 200

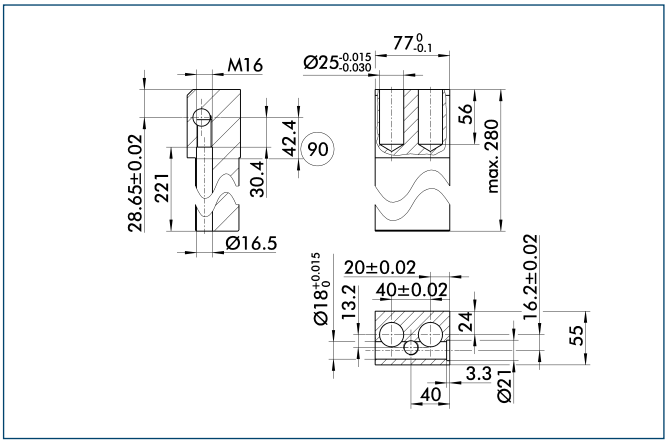


90 Length pressure piece

ⓘ The dimensions are finished dimensions - surfaces should be resistant to wear, e.g. hard alloy aluminum.

## BSWS 240

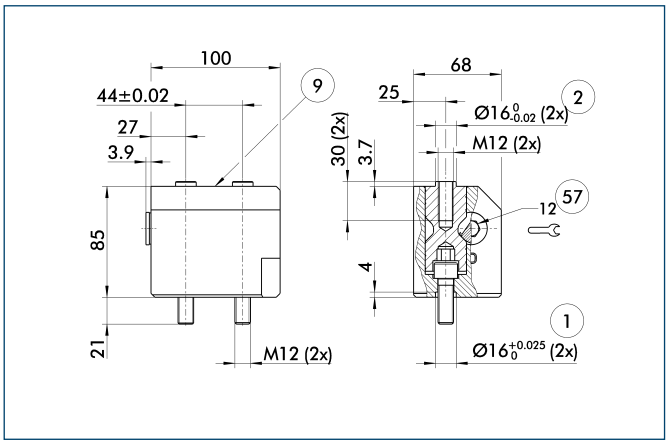


① Gripper connection
② Finger connection
⑨ For mounting screw connection diagram, see basic version
57 Locking

## BSWS-U 240

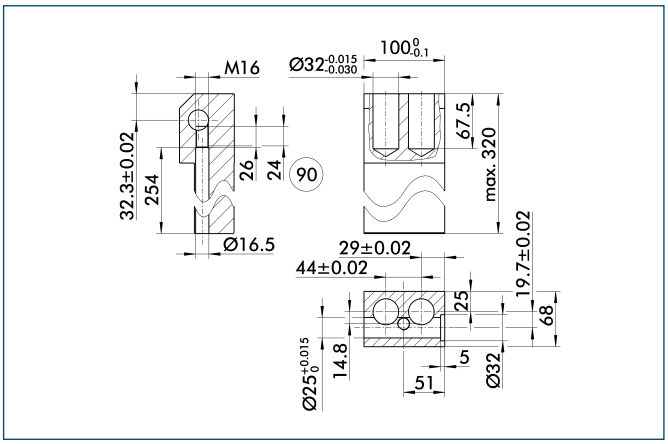


90 Length pressure piece

ⓘ The dimensions are finished dimensions - surfaces should be resistant to wear, e.g. hard alloy aluminum.

## BSWS 300

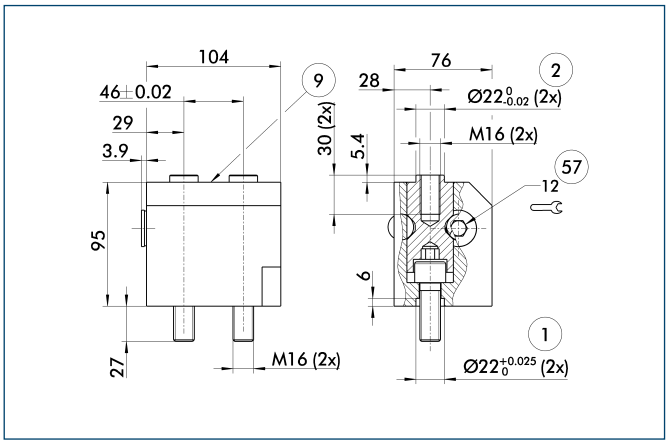


① Gripper connection
② Finger connection
⑨ For mounting screw connection diagram, see basic version
57 Locking

## BSWS-U 300

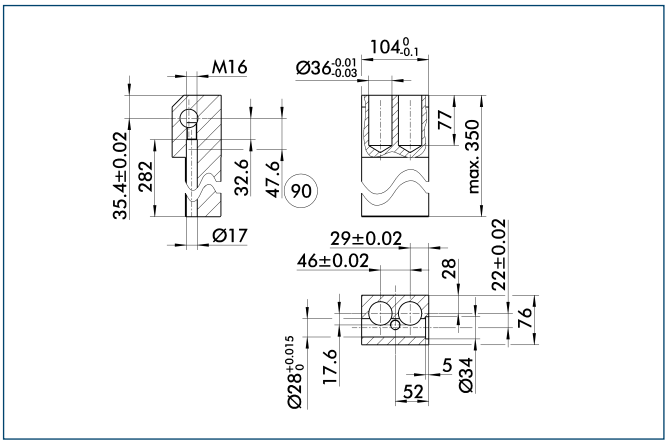


90 Length pressure piece

ⓘ The dimensions are finished dimensions - surfaces should be resistant to wear, e.g. hard alloy aluminum.

## Universal intermediate jaw

The universal intermediate jaw allows fast tool-free and reliable plugging and shifting of top jaws at the gripper.

## Field of application

For handling of various components or frequent retrofitting of automated production lines in clean to dirty environments.
Caution: The locking surfaces must keep free of grease and oil!

## Your advantages and benefits

**Gripper with finger-sided centering**
for universal and flexible gripper assembly

**Stable guiding strip**
suitable for long gripper fingers

**Grid**
precise and repeatable

**Tool-free adjustment and clamping**
for an easy and fast retrofitting

## Application example

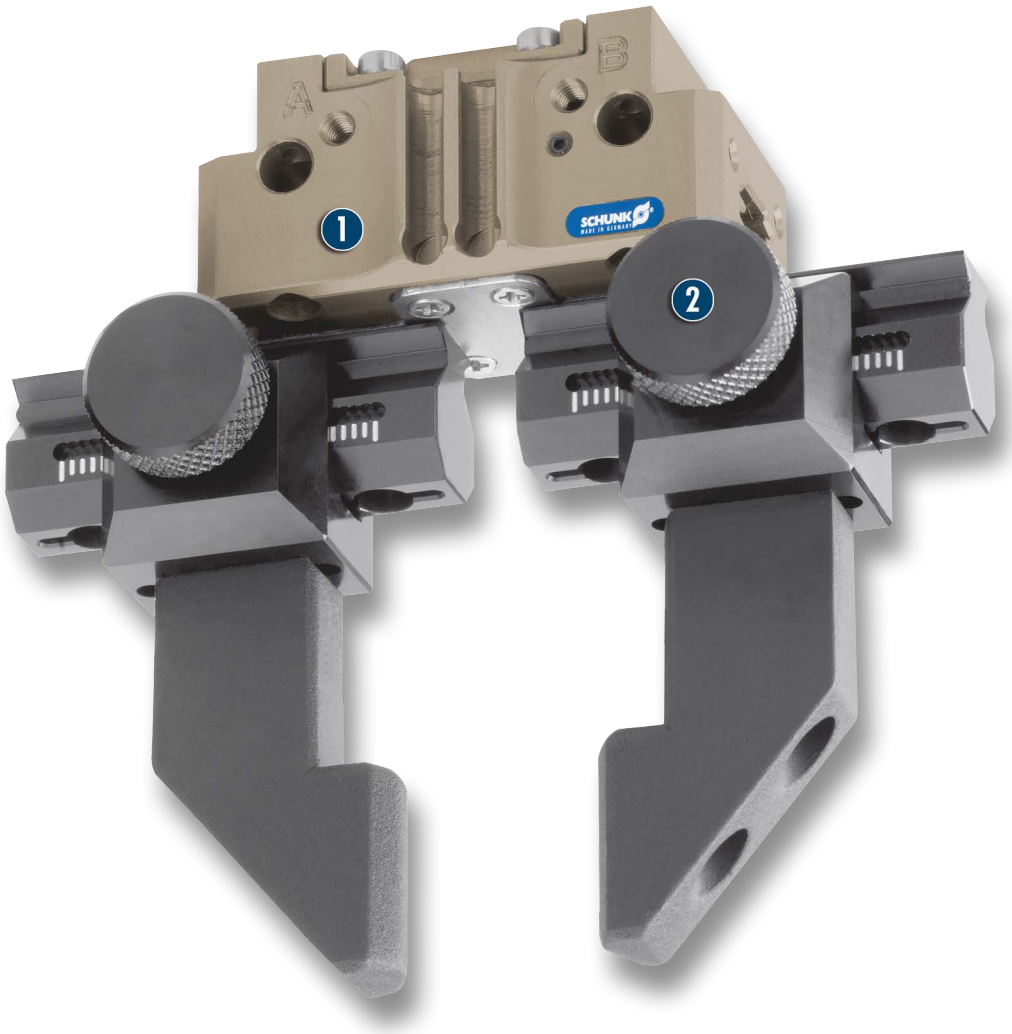


**Adjustment of the gripping range and jaw change within seconds and tool-free**

1. 2-Finger Parallel grippers PGN-plus
2. Universal intermediate jaw UZB

## Sectional diagram

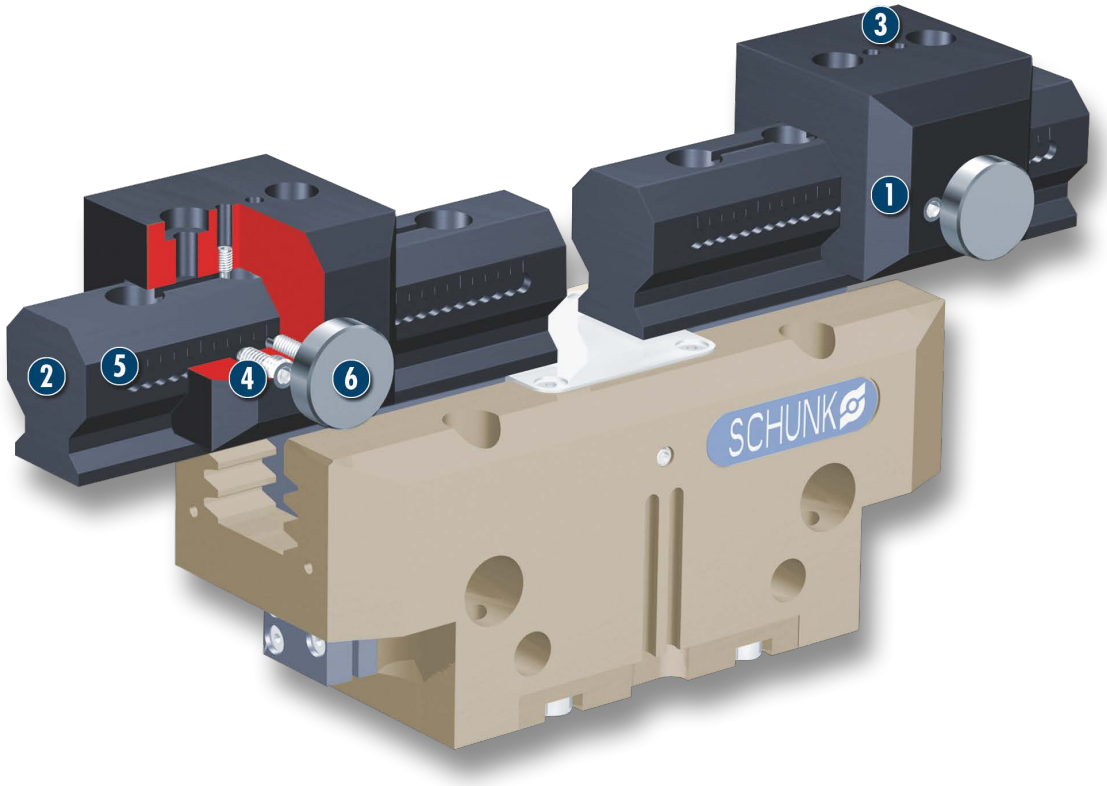


1 **UZB slides**
for adjustment of the gripping area

2 **UZB guidance**
high bending stiffness for exact gripping

3 **Finger connection**
for the connection of workpiece-specific gripper fingers

4 **Grid**
for fast adjustment of the gripping position

5 **Scale**
for position detecton and control

6 **Position clamping**
stable due to form-fit clamping

## Functional description

The finger stroke can be adjusted to tool-free. Then the intermediate jaw UZB allows retrofitting onto another workpiece width at short notice.
The two-pieces UZB intermediate jaw from SCHUNK allows fast exchange of the top. The gripper can be retrofitted within no time for other gripping tasks - without needing a tool.

## Options and special information

**Adjustment range**
up to three times higher than the gripper stroke

**Material**
Aluminum alloy, hard-anodized

**Warranty**
24 months (details, general terms and conditions and operation manuals can be downloaded under www.schunk.com)



## Technical data UZB

| Description | | UZB 40 | UZB 50 | UZB 64 | UZB 80 | UZB 100 | UZB 125 | UZB 160 | UZB 200 |
|---|---|---|---|---|---|---|---|---|---|
| ID | | 0300040 | 0300041 | 0300042 | 0300043 | 0300044 | 0300045 | 0300046 | 0300047 |
| Max. adjustable range | [mm] | 20 | 33 | 33 | 44 | 55 | 72.1 | 79 | 111 |
| Grid dimension | [mm] | 1 | 1.5 | 1.5 | 2 | 2.5 | 3 | 4 | 7 |
| Weight | [g] | 40 | 70 | 110 | 170 | 260 | 350 | 620 | 1180 |

## Technical data UZB-S

| Description | | UZB-S 80 | UZB-S 100 | UZB-S 125 | UZB-S 160 | UZB-S 200 |
|---|---|---|---|---|---|---|
| ID | | 5518271 | 5518272 | 5518273 | 5518274 | 5518275 |
| Max. adjustable range | [mm] | 2 | 2.5 | 3 | 4 | 7 |
| Grid dimension | [g] | 100 | 140 | 180 | 300 | 520 |

## Universal intermediate jaw UZB 40

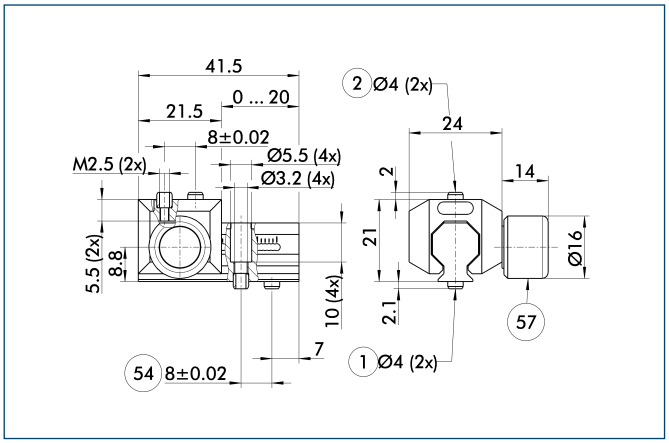


① Gripper connection
② Finger connection
54 Optional right or left connection
57 Locking

## Universal intermediate jaw UZB 50

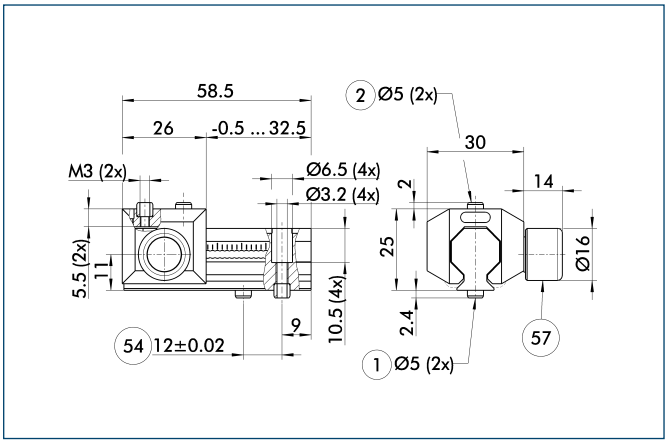


① Gripper connection
② Finger connection
54 Optional right or left connection
57 Locking

## Universal intermediate jaw UZB 64

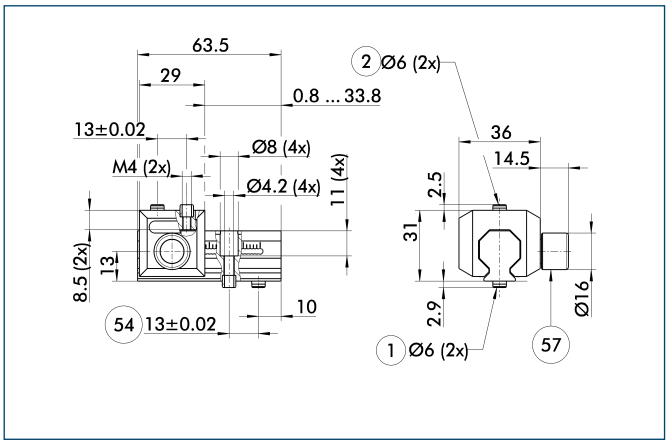


① Gripper connection
② Finger connection
54 Optional right or left connection
57 Locking

## Universal intermediate jaw UZB 80

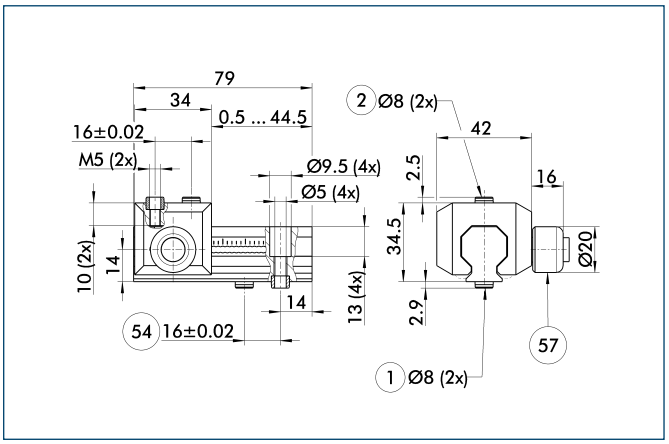


① Gripper connection
② Finger connection
54 Optional right or left connection
57 Locking

## Universal intermediate jaw UZB 100

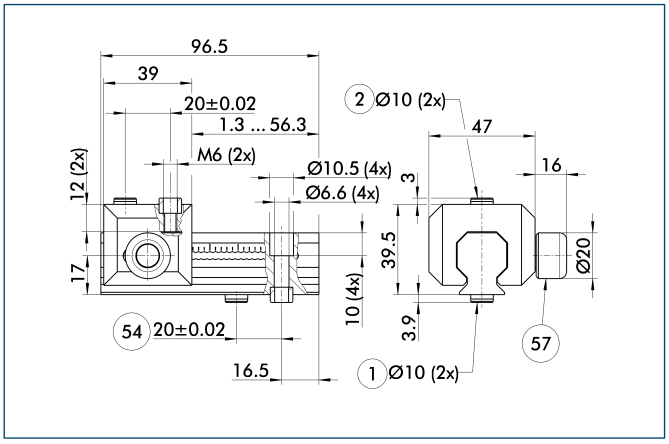


① Gripper connection
② Finger connection
54 Optional right or left connection
57 Locking

## Universal intermediate jaw UZB 125

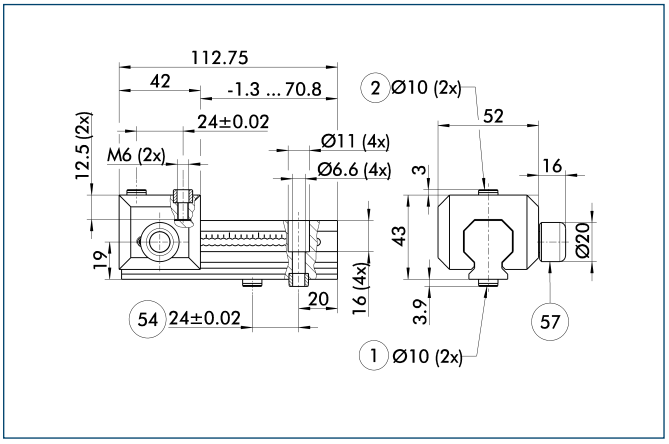


① Gripper connection
② Finger connection
54 Optional right or left connection
57 Locking

## Universal intermediate jaw UZB 160

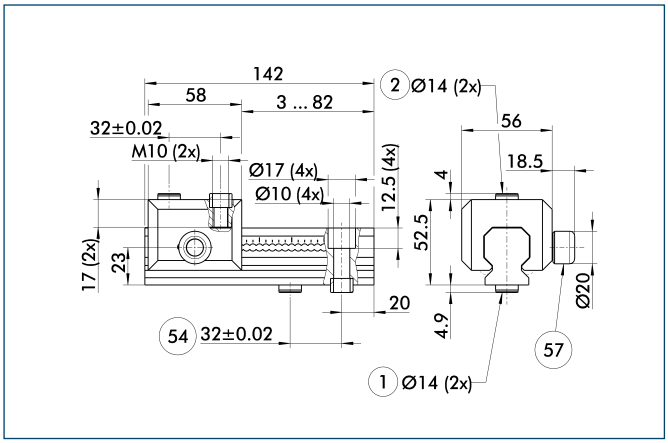


① Gripper connection
② Finger connection
54 Optional right or left connection
57 Locking

## Universal intermediate jaw UZB 200

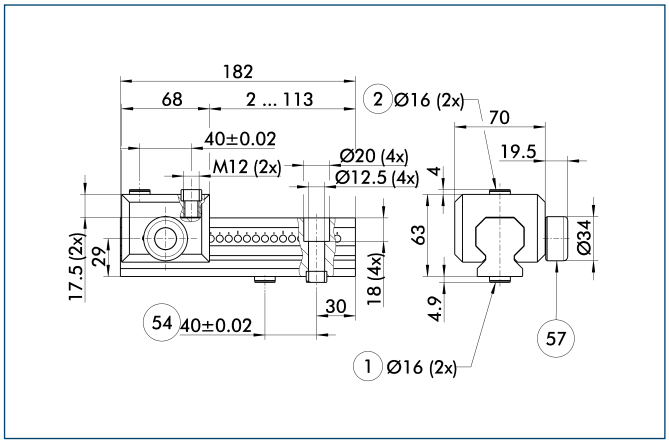


① Gripper connection
② Finger connection
54 Optional right or left connection
57 Locking

## Dust Cover HUE for PGN-plus

Soft plastic covering to protect gripper for numerous liquids.



## Function description

The gripper receives intermediate jaws and filler pieces, so that the protective sleeve can be mounted. In combination with the additionally required customer's sealing of the lower sleeve connection, this results in a rating of IP 65.

## Your advantages and benefits

**Economical**
for economical use

**Flexible**
through retrofitting

**Space-saving**
through minimum enlargement of the interfering contour

## Application example



### Area of application

use in numerous environments which are contaminated by fluids

### Notes

Please note that the bottom connection of the protective sleeve must be sealed by the customer. We recommend applying a seal weld. For materials and instructions on applying seal welds, see operating manual.
You will find the material data sheet for dust covers HUE under www.schunk.com.

# HUE for PGN-plus





## Technical data

| Description | ID | Material | ISO-Classification 14644-1 | Min. permanent temperature [°C] | Max. permanent temperature [°C] | Weight [kg] |
|---|---|---|---|---|---|---|
| HUE PGN-plus 40 | **0371490** | plastic | 2 | -30.0 | 80.0 | 0.05 |
| HUE PGN-plus 50 | **0371479** | plastic | 2 | -30.0 | 80.0 | 0.06 |
| HUE PGN-plus 64 | **0371480** | plastic | 2 | -30.0 | 80.0 | 0.08 |
| HUE PGN-plus 80 | **0371481** | plastic | 2 | -30.0 | 80.0 | 0.16 |
| HUE PGN-plus 100 | **0371482** | plastic | 2 | -30.0 | 80.0 | 0.24 |
| HUE PGN-plus 125 | **0371483** | plastic | 2 | -30.0 | 80.0 | 0.5 |
| HUE PGN-plus 160 | **0371484** | plastic | 2 | -30.0 | 80.0 | 0.6 |

## HUE for PGN-plus 40

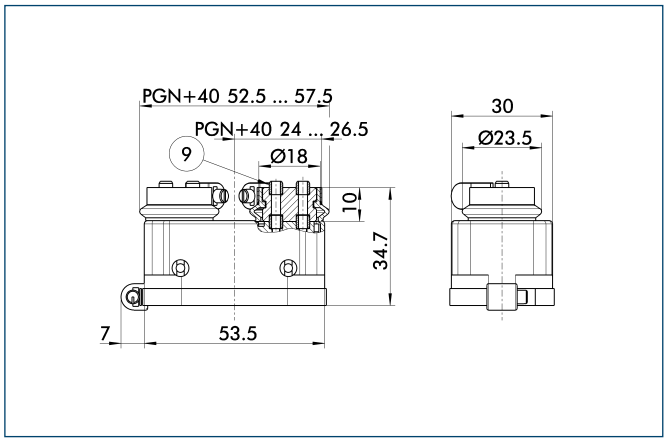


⑨ For screw connection diagram, see basic version

## HUE for PGN-plus 50

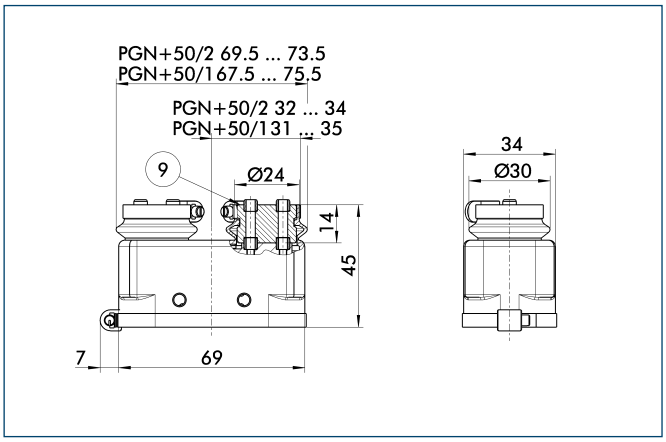


⑨ For screw connection diagram, see basic version

## HUE for PGN-plus 64

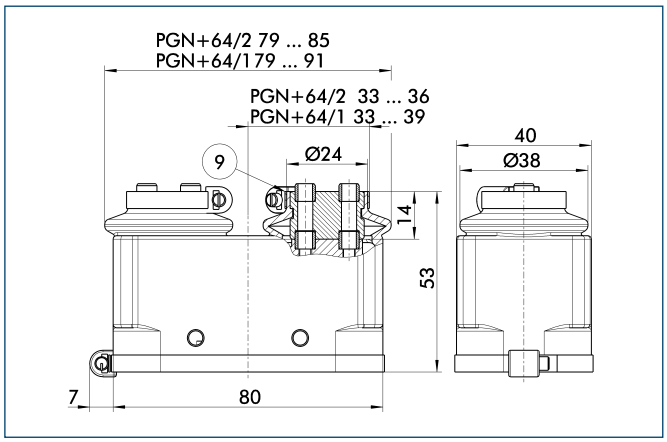


⑨ For screw connection diagram, see basic version

## HUE for PGN-plus 80

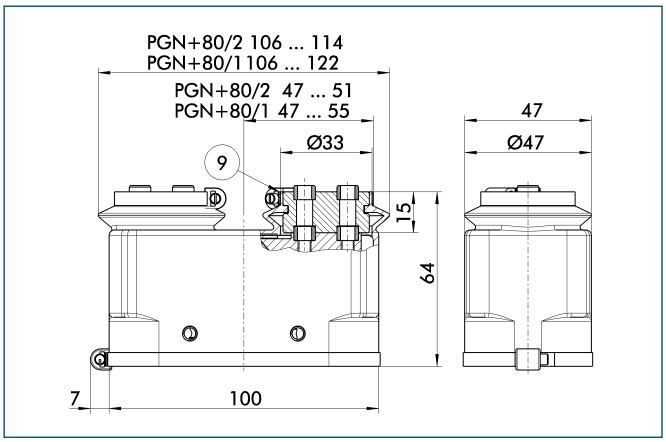


⑨ For screw connection diagram, see basic version

# HUE for PGN-plus



## HUE for PGN-plus 100

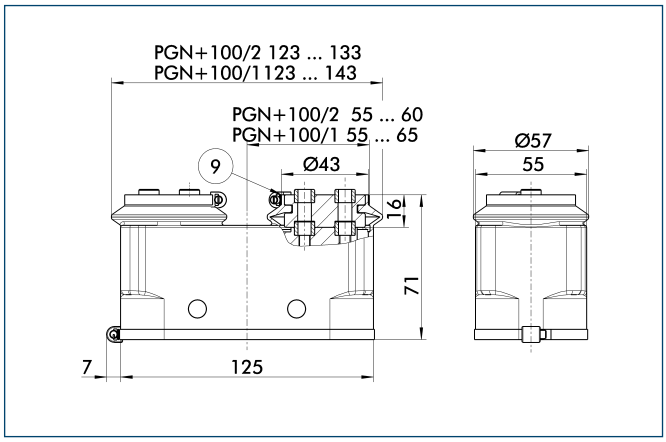


⑨ For screw connection diagram, see basic version

## HUE for PGN-plus 125

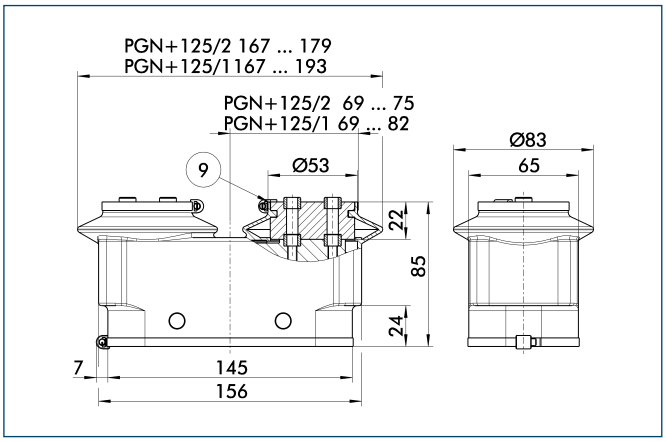


⑨ For screw connection diagram, see basic version

## HUE for PGN-plus 160

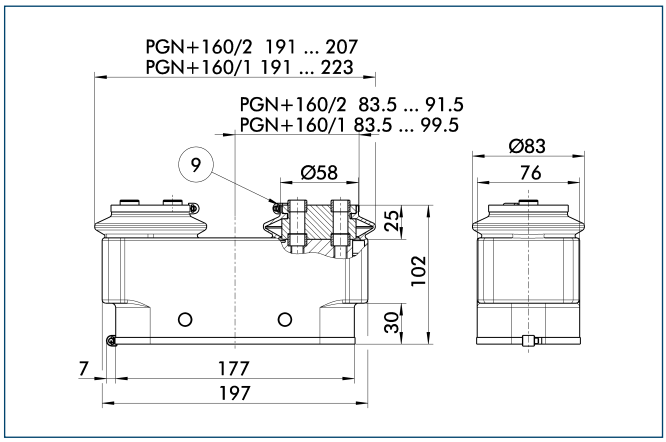


⑨ For screw connection diagram, see basic version

## Dust Cover HUE for PZN-plus

Soft plastic covering to protect gripper from numerous liquids.



## Function description

The gripper receives intermediate jaws and filler pieces, so that the protective sleeve can be mounted. In combination with the additionally required customer's sealing of the lower sleeve connection, this results in a rating of IP 65.

## Your advantages and benefits

**Economical**
for economical use

**flexible**
through retrofitting

**Space-saving**
through minimum enlargement of the interfering contour

## Application diagram



### Area of application

use in numerous environments which are contaminated by fluids

### Notes

Please note that the bottom connection of the protective sleeve must be sealed by the customer. We recommend applying a seal weld. For materials and instructions on applying seal welds, see operating manual.
You will find the material data sheet for dust covers HUE under www.schunk.com.

# HUE for PZN-plus





## Technical data

| Description | ID | Material | ISO-Classification 14644-1 | Min. permanent temperature [°C] | Max. permanent temperature [°C] | Weight [kg] |
|---|---|---|---|---|---|---|
| HUE PZN-plus 40 | **0303478** | plastic | 2 | -30.0 | 80.0 | 0.09 |
| HUE PZN-plus 50 | **0303479** | plastic | 2 | -30.0 | 80.0 | 0.11 |
| HUE PZN-plus 64 | **0303480** | plastic | 2 | -30.0 | 80.0 | 0.14 |
| HUE PZN-plus 80 | **0303481** | plastic | 2 | -30.0 | 80.0 | 0.28 |
| HUE PZN-plus 100 | **0303482** | plastic | 2 | -30.0 | 80.0 | 0.42 |
| HUE PZN-plus 125 | **0303483** | plastic | 2 | -30.0 | 80.0 | 0.87 |
| HUE PZN-plus 160 | **0303484** | plastic | 2 | -30.0 | 80.0 | 1.05 |

## HUE for PZN-plus 40

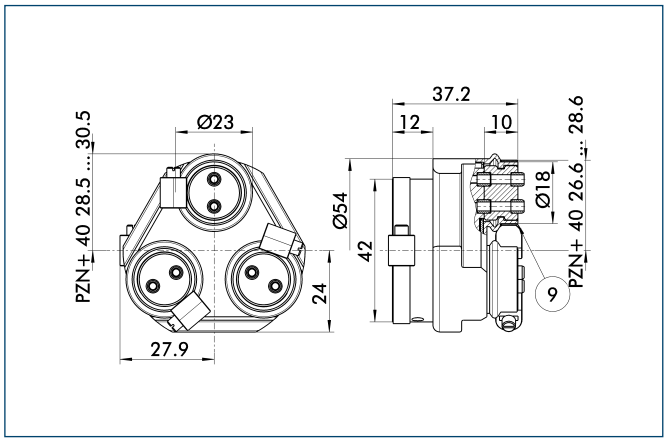


⑨ For screw connection diagram, see basic version

## HUE for PZN-plus 50

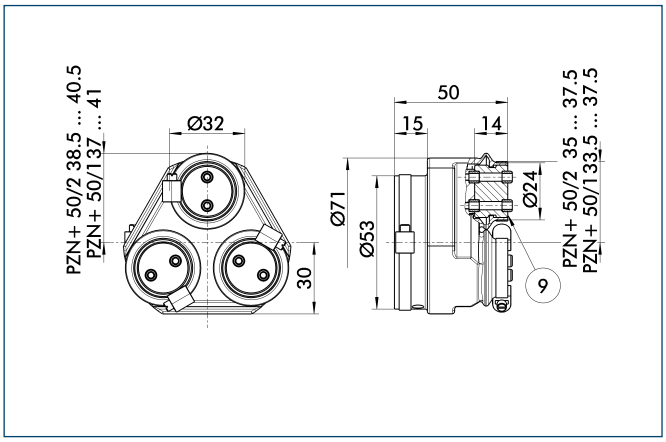


⑨ For screw connection diagram, see basic version

## HUE for PZN-plus 64

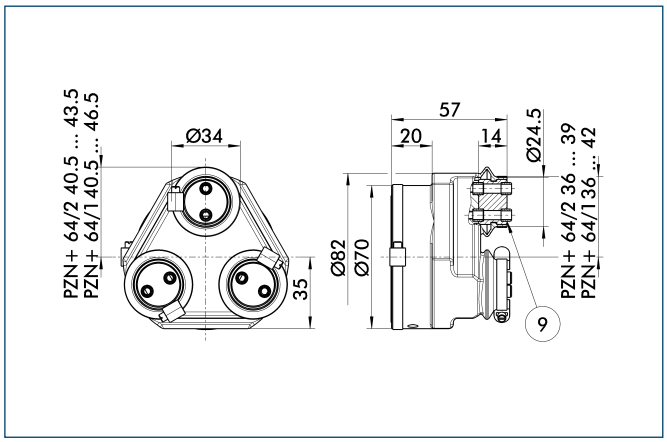


⑨ For screw connection diagram, see basic version

## HUE for PZN-plus 80

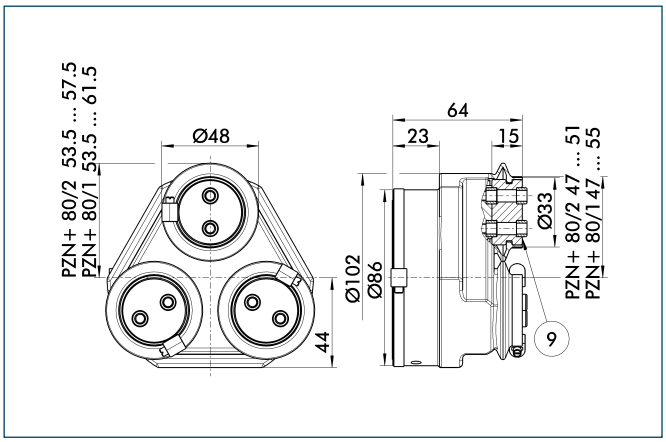


⑨ For screw connection diagram, see basic version

# HUE for PZN-plus



## HUE for PZN-plus 100

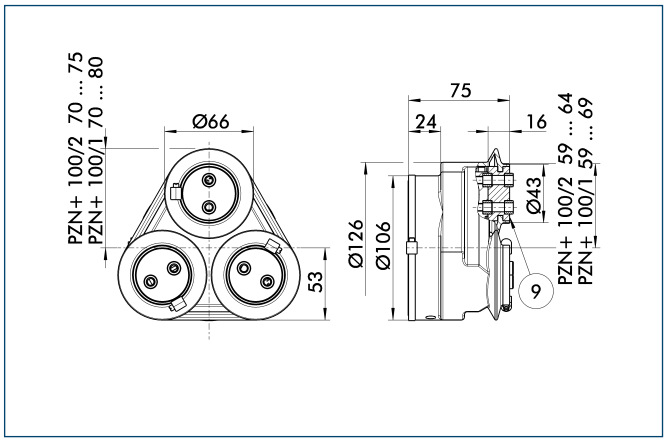


⑨ For screw connection diagram, see basic version

## HUE for PZN-plus 125

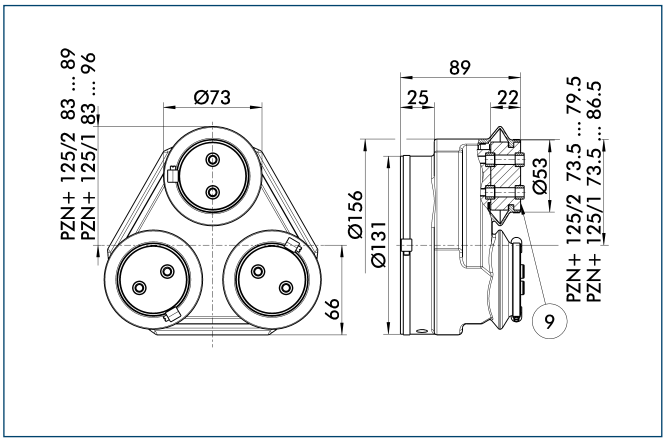


⑨ For screw connection diagram, see basic version

## HUE for PZN-plus 160

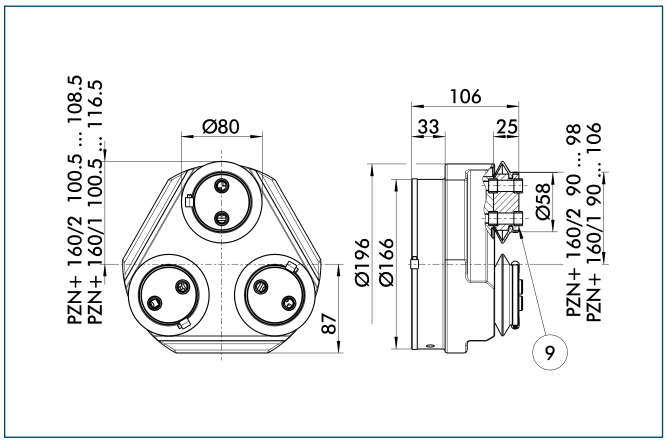


⑨ For screw connection diagram, see basic version

## Centering Sleeves

Centering sleeves are used for centering between two elements. With SCHUNK grippers, this frequently occurs between the mounting plate and gripper and between the gripper and gripper fingers.



## Function description

The centering sleeves are inserted coaxially to the screws.

## Your advantages and benefits

**Space-saving**
for small, compact grippers

**Precise**
for high repeat accuracy

**Economical**
for low costs

**Easy to install**
for fast assembly



## Area of application

variable centering tasks for gripper and rotary modules, as well as linear modules.

## General information

**Material**
steel

**Warranty**
24 months

## Notes

SCHUNK grippers include all necessary centering sleeves.



## Technical data

| Description | ID | Material | Ø D [mm] | Ø d [mm] | H [mm] |
|---|---|---|---|---|---|
| ZHU | **9941547** | Steel | 2.0h6 | 1.3 | 1.95-0.05 |
| ZHU | **9941628** | Steel | 2.5h6 | 1.7 | 1.95-0.05 |
| ZHU | **9941629** | Steel | 3.0h6 | 2.1 | 1.95-0.05 |
| ZHU | **9939947** | Steel | 3.5h6 | 2.1 | 2.95-0.05 |
| ZHU | **9939376** | Steel | 4.0h6 | 2.6 | 3.95-0.05 |
| ZHU | **9939377** | Steel | 5.0h6 | 3.1 | 4.35-0.05 |
| ZHU | **9939384** | Steel | 6.0h6 | 4.1 | 5.35-0.05 |
| ZHU | **9939378** | Steel | 8.0h6 | 5.1 | 5.35-0.05 |
| ZHU | **9939379** | Steel | 10.0h6 | 6.2 | 6.65-0.05 |
| ZHU | **9939380** | Steel | 12.0h6 | 8.2 | 6.65-0.05 |
| ZHU | **9939381** | Steel | 14.0h6 | 10.2 | 8.6-0.1 |
| ZHU | **9939382** | Steel | 16.0h6 | 12.2 | 8.6-0.1 |
| ZHU | **9939383** | Steel | 22.0h6 | 16.2 | 13.6-0.1 |
| ZHU | **9941220** | Steel | 28.0h6 | 21.0 | 17.6-0.1 |

## Main view

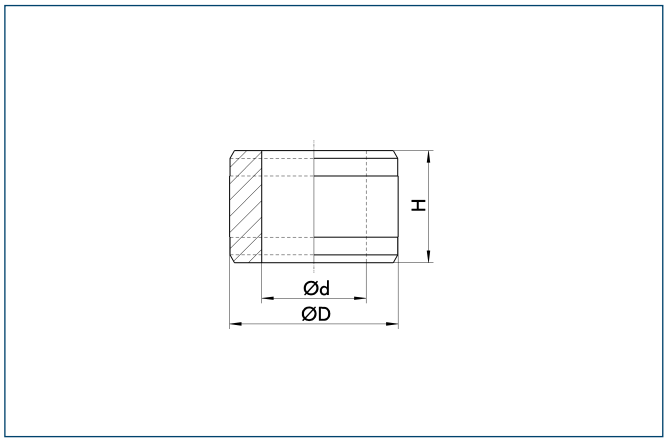

## Connecting Elements for PowerCube

Standard elements and adapters for the accurately repeatable connections of PowerCube modules



## Function description

The dimensions of the connecting elements are matched to the cube shape of the PowerCube modules. The accurately repeatable connection is made easily and quickly by means of four hexagon socket screws.

## Your advantages and benefits

**Standard elements**
for high availability

**Geometry designs “straight”, “conical” and “angular”**
for maximum combinations

**Suitable for all grippers, rotary units, drives and linear modules of the PowerCube series**

## Application example

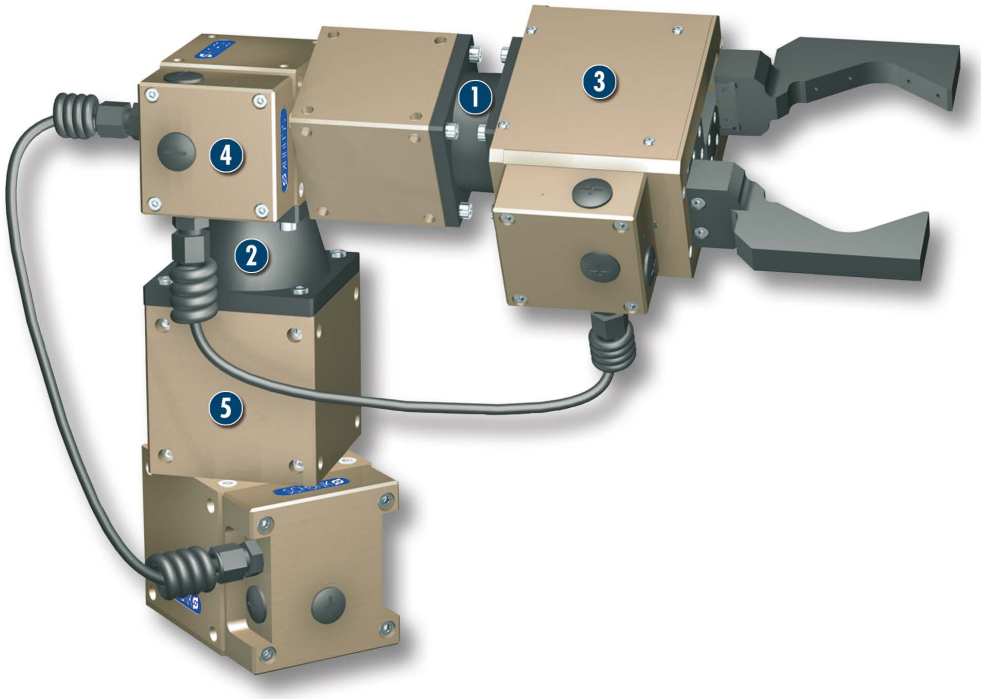


### Area of application

for easy and accurately repeatable connection of all PowerCube modules

1. Connecting element – straight PAM 100
2. Connecting element – conical PAM 110
3. Servo-electric 2-Finger Parallel Gripper PG 70
4. Servo-electric Rotary Actuator PR 70
5. Servo-electric Rotary Actuator PR 90

## General information

**Warranty**
24 months

**Material**
Aluminum alloy, hard-anodized

## Notes

Special lengths are available on request.

# PAM – Straight



## PAM 100 – Straight

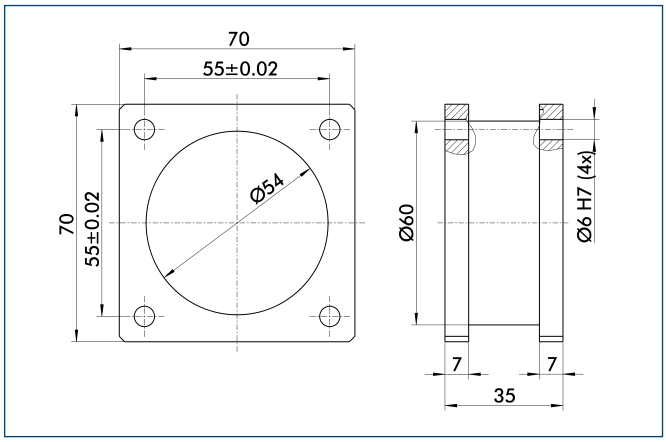


suitable for PowerCube-Modules of size 70

| Description | ID |
|---|---|
| PAM 100 | 0307800 |

## PAM 101 – Straight

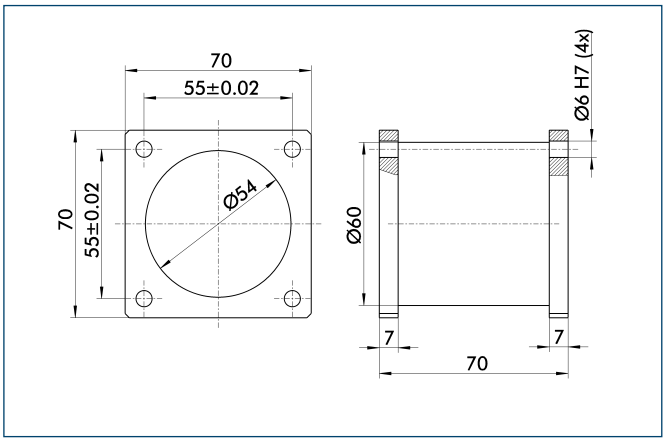


suitable for PowerCube-Modules of size 70

| Description | ID |
|---|---|
| PAM 101 | 0307801 |

## PAM 102 – Straight

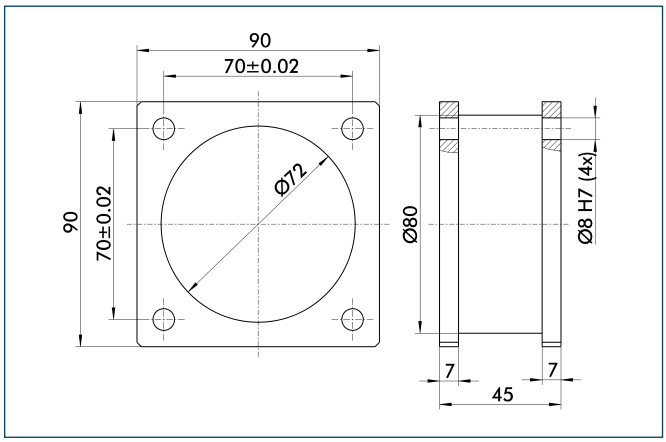


suitable for PowerCube-Modules of size 90

| Description | ID |
|---|---|
| PAM 102 | 0307802 |

## PAM 103 – Straight

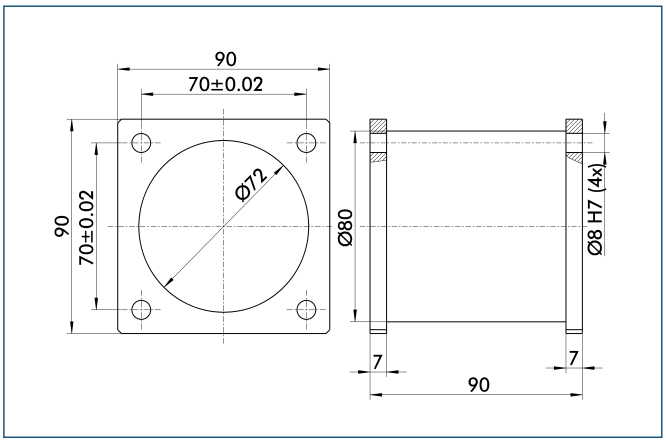


suitable for PowerCube-Modules of size 90

| Description | ID |
|---|---|
| PAM 103 | 0307803 |

## PAM 104 – Straight

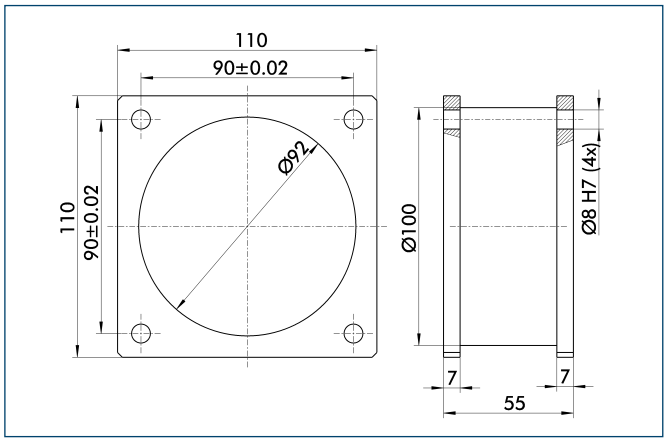


suitable for PowerCube-Modules of size 110

| Description | ID |
|---|---|
| PAM 104 | 0307804 |

## PAM 105 – Straight

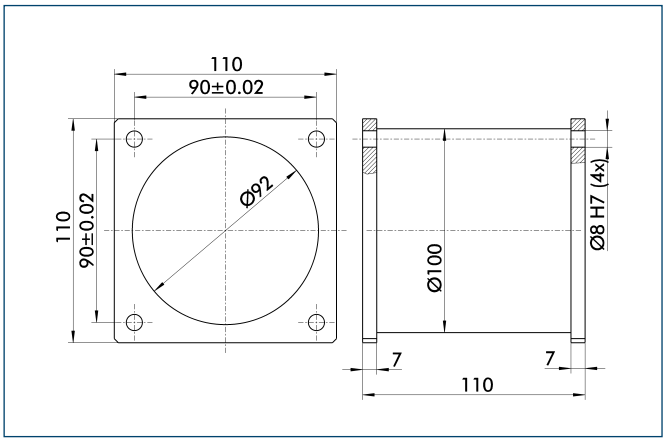


suitable for PowerCube-Modules of size 110

| Description | ID |
|---|---|
| PAM 105 | 0307805 |

# PAM – Angled



## PAM 120 – Angled

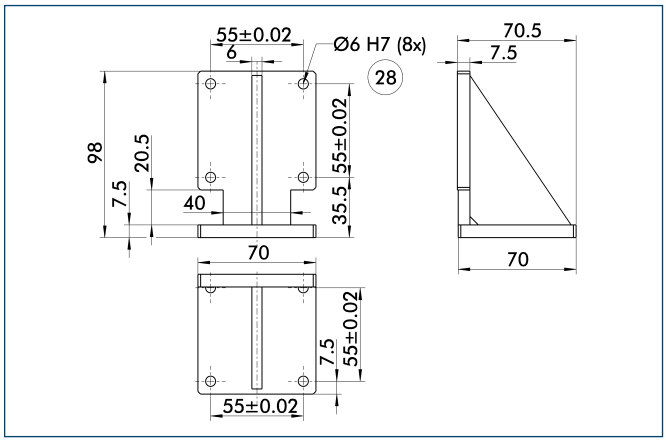


28 Through-bore

suitable for PowerCube-Modules of size 70

| Description | ID |
|---|---|
| PAM 120 | 0307820 |

## PAM 121 – Angled

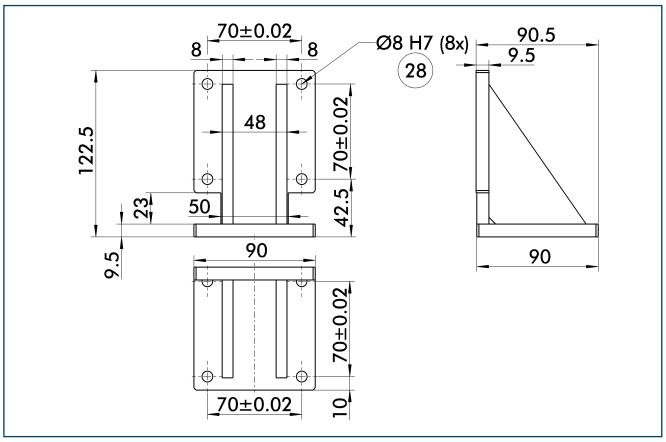


28 Through-bore

suitable for PowerCube-Modules of size 90

| Description | ID |
|---|---|
| PAM 121 | 0307821 |

## PAM 122 – Angled

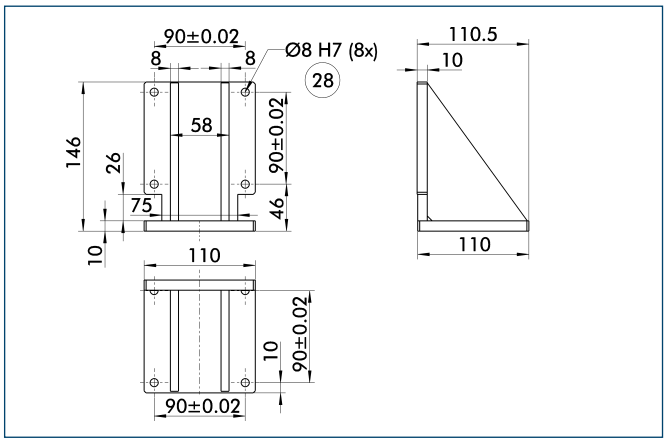


28 Through-bore

suitable for PowerCube-Modules of size 110

| Description | ID |
|---|---|
| PAM 122 | 0307822 |

## PAM 110 – Conical

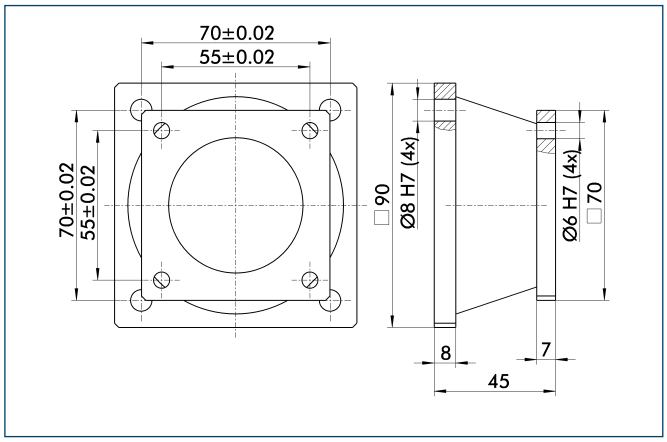


suitable for PowerCube-Modules of size 70/90

| Description | ID |
|---|---|
| PAM 110 | 0307810 |

## PAM 111 – Conical

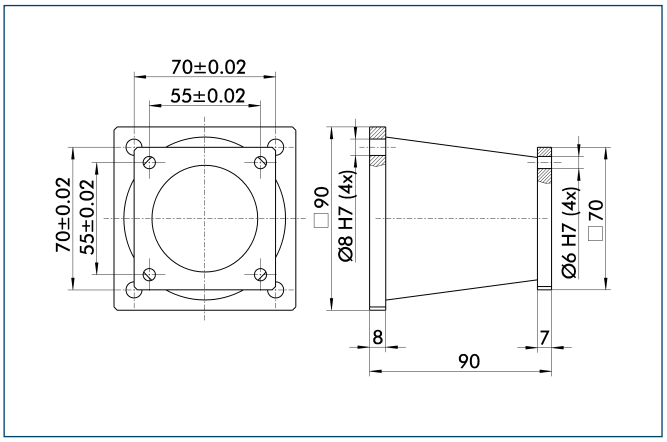


suitable for PowerCube-Modules of size 70/90

| Description | ID |
|---|---|
| PAM 111 | 0307811 |

## PAM 112 – Conical

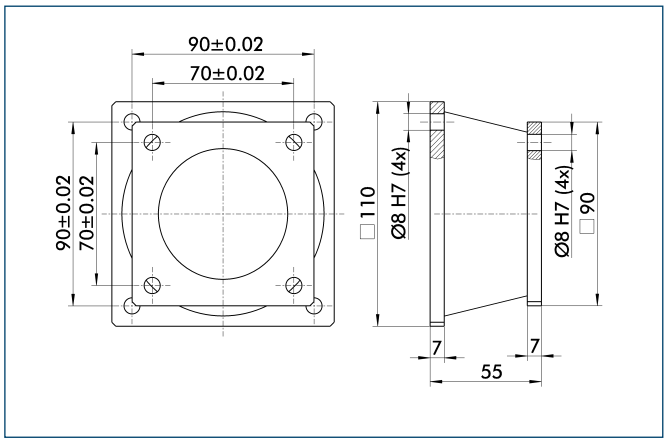


suitable for PowerCube-Modules of size 90/110

| Description | ID |
|---|---|
| PAM 112 | 0307812 |

## PAM 113 – Conical

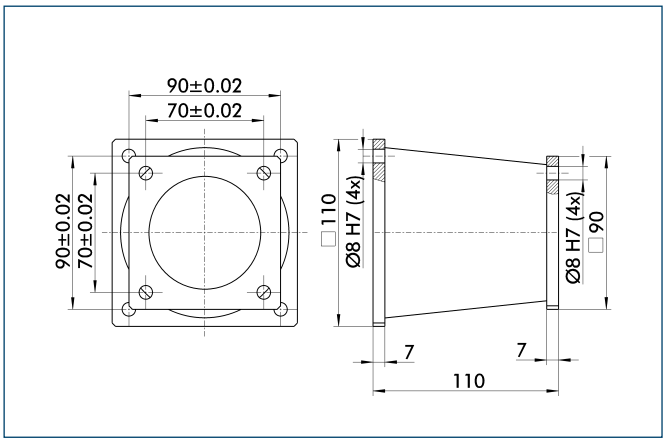


suitable for PowerCube-Modules of size 90/110

| Description | ID |
|---|---|
| PAM 113 | 0307813 |

# PAM – Adapter plates



## PAM 164

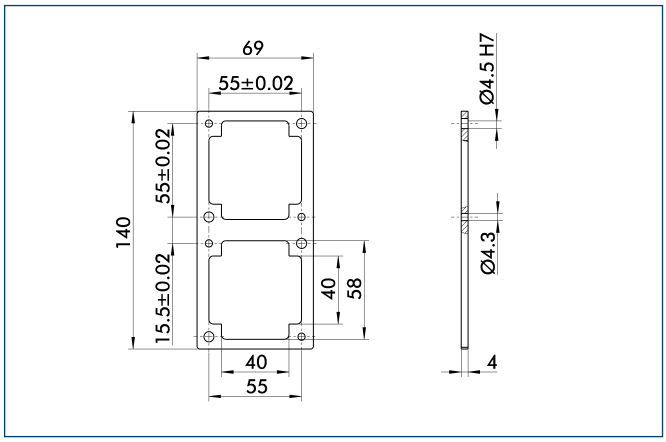


suitable for PowerCube-Modules of size 70

| Description | ID |
|---|---|
| PAM 164 | 0307864 |

## PAM 165

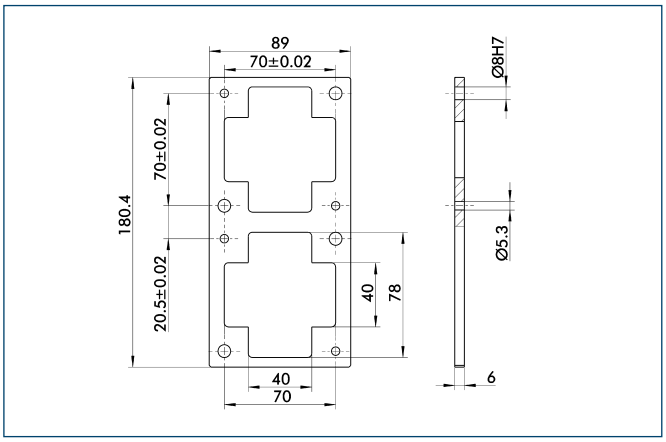


suitable for PowerCube-Modules of size 90

| Description | ID |
|---|---|
| PAM 165 | 0307865 |

## PAM 166

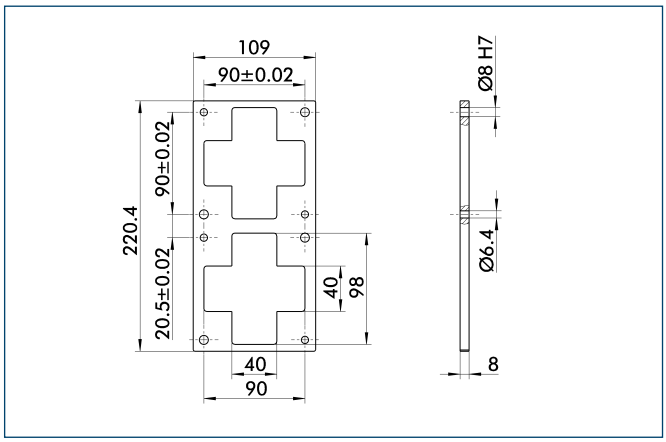


suitable for PowerCube-Modules of size 110

| Description | ID |
|---|---|
| PAM 166 | 0307866 |

## PAM 147 – PG to PW

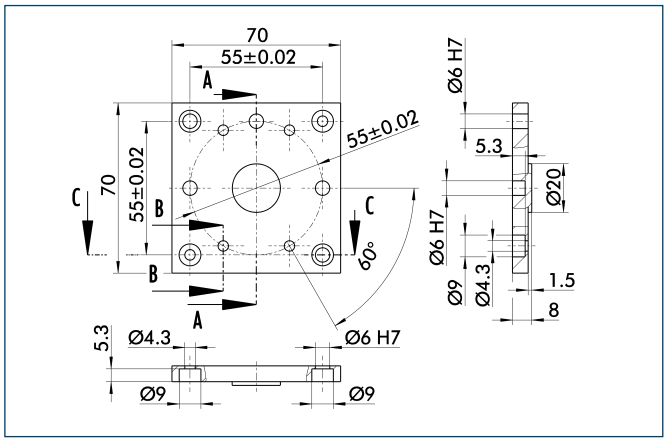


suitable for accurately repeatable connection of the 2-finger parallel gripper PG 70 with the rotary pan-tilt actuator PW 70

| Description | ID |
|---|---|
| PAM 147 | 0307847 |

## PAM 160 – PW to FTCL

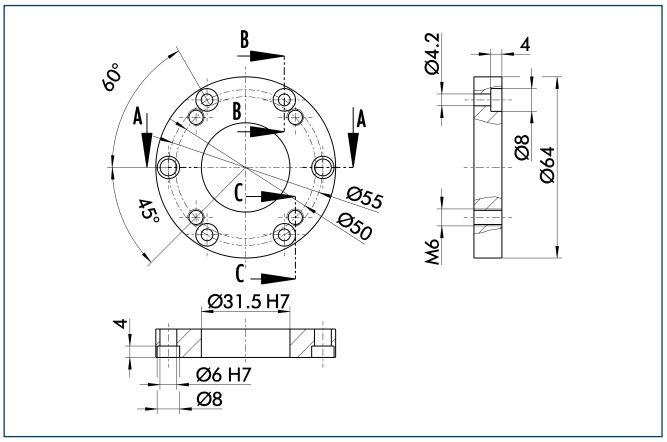


suitable for accurately repeatable connection of the rotary pan-tilt actuator PW 70 with the force sensor FTCL-050

| Description | ID |
|---|---|
| PAM 160 | 0307860 |

## PAM 161 – FTCL to PG

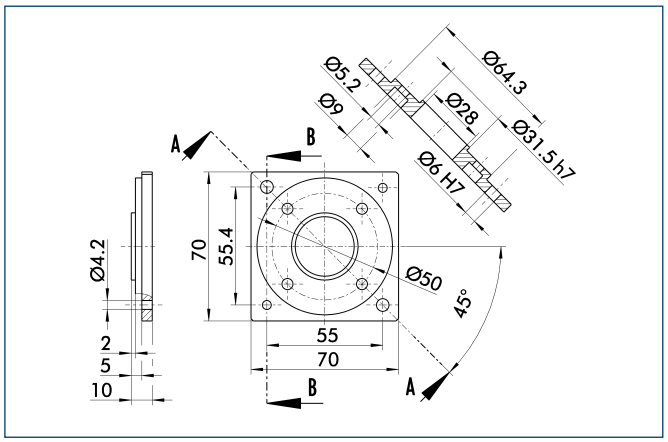


suitable for accurately repeatable connection of the force sensor FTCL-050 with the 2-finger parallel gripper PG 70

| Description | ID |
|---|---|
| PAM 161 | 0307861 |

## Pressure maintenance Valves and Fittings

For connection and mounting of pneumatic hoses.



## Your advantages and benefits

**Suitable**
for all SCHUNK gripper, rotary and linear modules, in addition to robot accessories

**Flexible utilization**
For use on pneumatic hoses from various manufacturers

**Fittings as plug-in connections**
for fast hose attachment

**SDV-P pressure maintenance valve**
prevents loss of pressure

## Application example

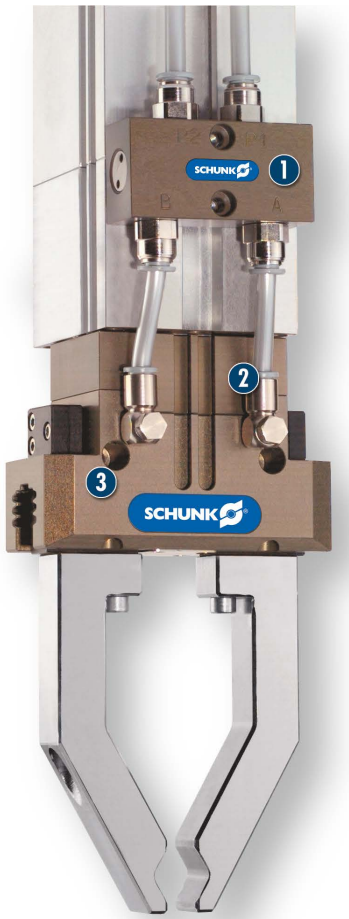


### Area of application

for secure hose connections in automation solutions

1. SDV-P pressure maintenance valve
2. SWV banjo fitting
3. PGN-plus 2-Finger Parallel Gripper with workpiece-specific gripper fingers

## General information

**Warranty**
24 months



## Pressure Maintenance Valve

In case of pressure loss, the pressure maintenance valve prevents air from escaping from the gripper. This prevents loss of clamping force, and the workpieces remain securely clamped in the gripper jaws. Especially suitable for grippers that cannot be equipped with a mechanical safety device.

## Function

Two parallel switched check valves, which when pressurized, automatically open the return flow direction and close the pressure line.

## Circuit diagram

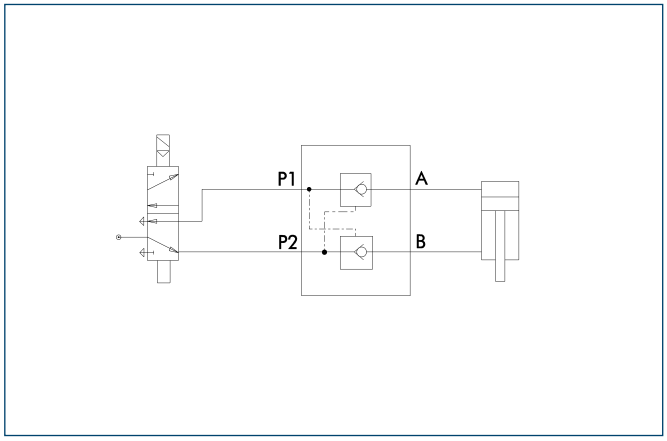


## Technical data

| Description | | SDV-P 04 | SDV-P 07 |
|---|---|---|---|
| ID | | 0403130 | 0403131 |
| Connection | [“] | G1/8 | G1/4 |
| Max. throughput | [l/min] | 200 | 300 |
| Min. ambient temperature | [°C] | -10.0 | -10.0 |
| Max. ambient temperature | [°C] | 80.0 | 80.0 |
| Weight | [kg] | 0.1 | 0.18 |
| Min. pressure | [bar] | 0.5 | 0.5 |
| Max. pressure | [bar] | 10 | 10 |
| Switching time | [s] | 0.01 | 0.01 |

## SDV-P 04

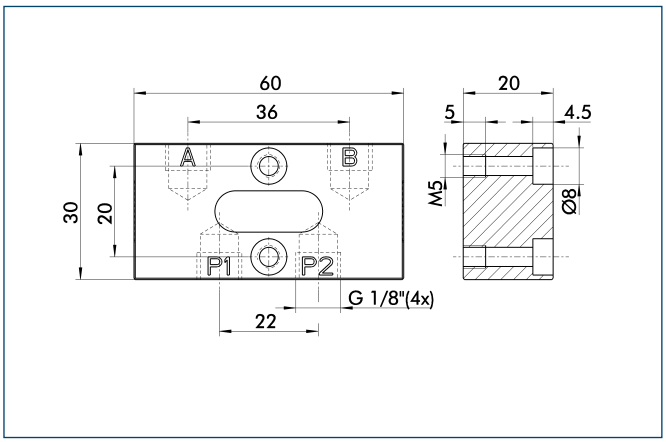


## SDV-P 07

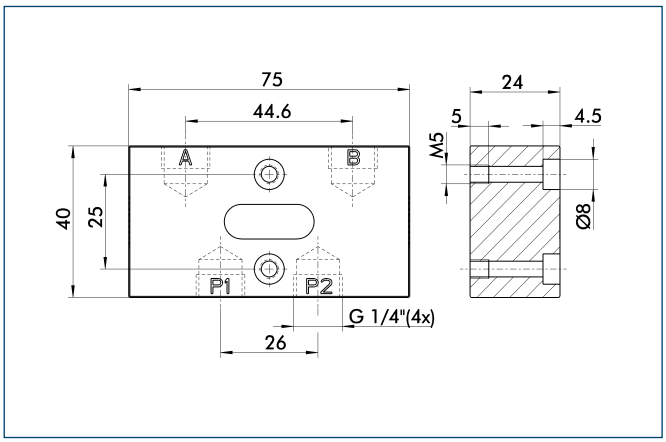



## WV Elbow Fitting

version as plug-in connection for fast and easy connection to the pneumatic energy supplies

## Technical data

| Description | | WV-G1/8-6 | WV-G1/8-8 | WV-G1/4-6 |
|---|---|---|---|---|
| ID | | 9937129 | 9936730 | 9937170 |
| For hose diameter | [mm] | 6.0 | 8.0 | 6.0 |
| Threaded connection | [“] | G1/8 | G1/8 | G1/4 |
| Max. pressure | [bar] | 20.0 | 20.0 | 20.0 |
| Min. ambient temperature | [°C] | -10.0 | -10.0 | -10.0 |
| Max. ambient temperature | [°C] | 60.0 | 60.0 | 60.0 |

## Main view WV

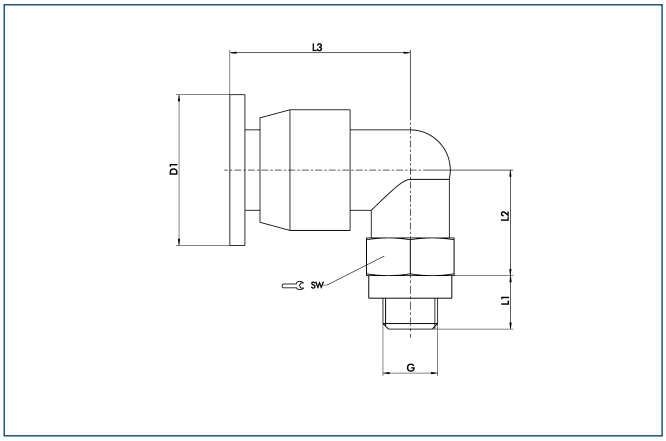


| Variable | WV-G 1-8-6 | WV-G 1-8-8 | WV-G 1-4-6 |
|---|---|---|---|
| G | 1/8“ | 1/8“ | 1/4“ |
| $L_1$ | 5 | 5 | 7 |
| $L_2$ | 13.05.07 | 16 | 15.05.07 |
| $L_3$ | 22 | 25.05.07 | 23.05.07 |
| $D_1$ | 12 | 14 | 12 |
| SW | 13 | 13 | 17 |
| $S_4$ | 10 | 12 | 10 |



## SWV Banjo Fitting

version as plug-in connection for fast and
easy connection to the pneumatic energy supplies

| Description | | SWV-M3-4 | SWV-M5-6 | SWV-G4-6 | SWV-G8-6 | SWV-G4-8 |
|---|---|---|---|---|---|---|
| ID | | 9210505 | 9936171 | 9937128 | 9937152 | 9936728 |
| For hose diameter | [mm] | 4.0 | 6.0 | 6.0 | 6.0 | 8.0 |
| Threaded connection | [“] | M 3 | M 5 | G1/4 | G1/8 | G1/4 |
| Max. pressure | [bar] | 20.0 | 20.0 | 20.0 | 20.0 | 20.0 |
| Min. ambient temperature | [°C] | -10.0 | -10.0 | -10.0 | -10.0 | -10.0 |
| Max. ambient temperature | [°C] | 60.0 | 60.0 | 60.0 | 60.0 | 60.0 |

## Main view SWV

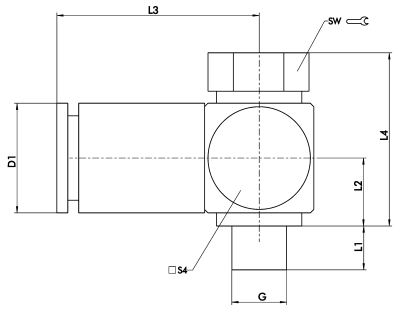


| Variable | SWV-M5-6 | SWV-G8-6 | SWV-G4-6 | SWV-G4-8 |
|---|---|---|---|---|
| G | M5 | G1/8“ | G1/4“ | G1/4“ |
| $d_3$ | 2 | 5 | 7 | 7 |
| $L_1$ | 4 | 06.05.07 | 8 | 8 |
| $L_2$ | 06.02.07 | 01.08.25 | 08.04.07 | 15.03.07 |
| $L_3$ | 18.05.07 | 22.05.07 | 24.05.07 | 25 |
| $L_4$ | 15.08.07 | 20.05.07 | 21.06.07 | 21.06.07 |
| $D_1$ | 10 | 12 | 12 | 13.05.07 |
| SW | 8 | 14 | 17 | 17 |
| $S_4$ | 10 | 15 | 19 | 19 |

## Main view SWV-M3

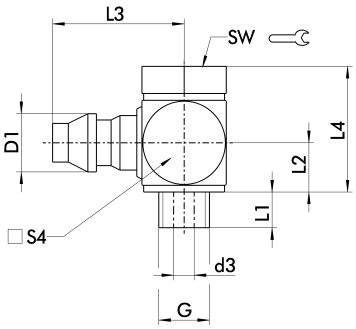


| Variable | SWV-M3-4 |
|---|---|
| G | M3 |
| $d_3$ | 01.01.07 |
| $L_1$ | 2 |
| $L_2$ | 02.05.07 |
| $L_3$ | 07.03.07 |
| $L_4$ | 07.03.07 |
| $D_1$ | 03.04.07 |
| SW | 5 |
| $S_4$ | 5 |



## DSV Banjo Fitting

with one-way flow control valve Version as plug-in connection for fast and easy connection to the pneumatic energy supplies

## Technical data

| Description | | DSV-M3-3 | DSV-M5-6 | DSV-G8-6 | DSV-G4-6 | DSV-G4-8 |
|---|---|---|---|---|---|---|
| ID | | 9720005 | 9936160 | 9936159 | 9936161 | 9936162 |
| Hose | [mm] | 3.0 | 6.0 | 6.0 | 6.0 | 8.0 |
| Min. operating temperature | [°C] | -10.0 | -10.0 | -10.0 | -10.0 | -10.0 |
| Max. operating temperature | [°C] | 60.0 | 60.0 | 60.0 | 60.0 | 60.0 |
| Max. operating Pressure | [bar] | 20.0 | 20.0 | 20.0 | 20.0 | 20.0 |

## Main view DSV

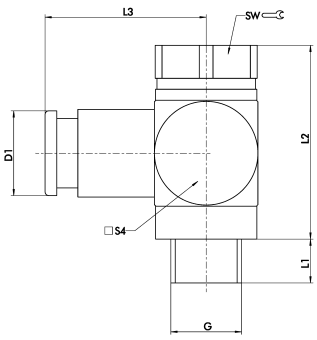


| Variable | DSV-M3-3 | DSV-M5-6 | DSV-G8-6 | DSV-G4-6 | DSV-G8-8 |
|---|---|---|---|---|---|
| G | M3 | M5 | G1/8" | G1/4" | G1/8" |
| $L_1$ | 02.05.07 | 4 | 5 | 06.05.07 | 5 |
| $L_{2\ max.}$ | 29 | 21.05.07 | 30 | 32 | 30 |
| $L_3$ | 11 | 21 | 22.05.07 | 24.05.07 | 23 |
| $D_1$ | 04.08.07 | 10.04.07 | 12 | 12 | 14 |
| SW | knurl | 8 | 14 | 17 | 14 |




## Grease

for re-lubrication of SCHUNK products in small containers.

## Technical data

| Description | | HLT 2 | BR 2 plus | LINO MAX |
|---|---|---|---|---|
| ID | | 9948131 | 9948301 | 0184210 |
| Area of application | | Seals | Internal sliding surface between metal friction pairs | External sliding surface between metal friction pairs |
| Package form | | Cartridge | Can | Cartridge |
| Quantity | [kg] | 0.4 | 1.0 | 0.5 |

ⓘ Exact information on which grease is to be used where can be found in the operating manual for your SCHUNK module.

# Notes

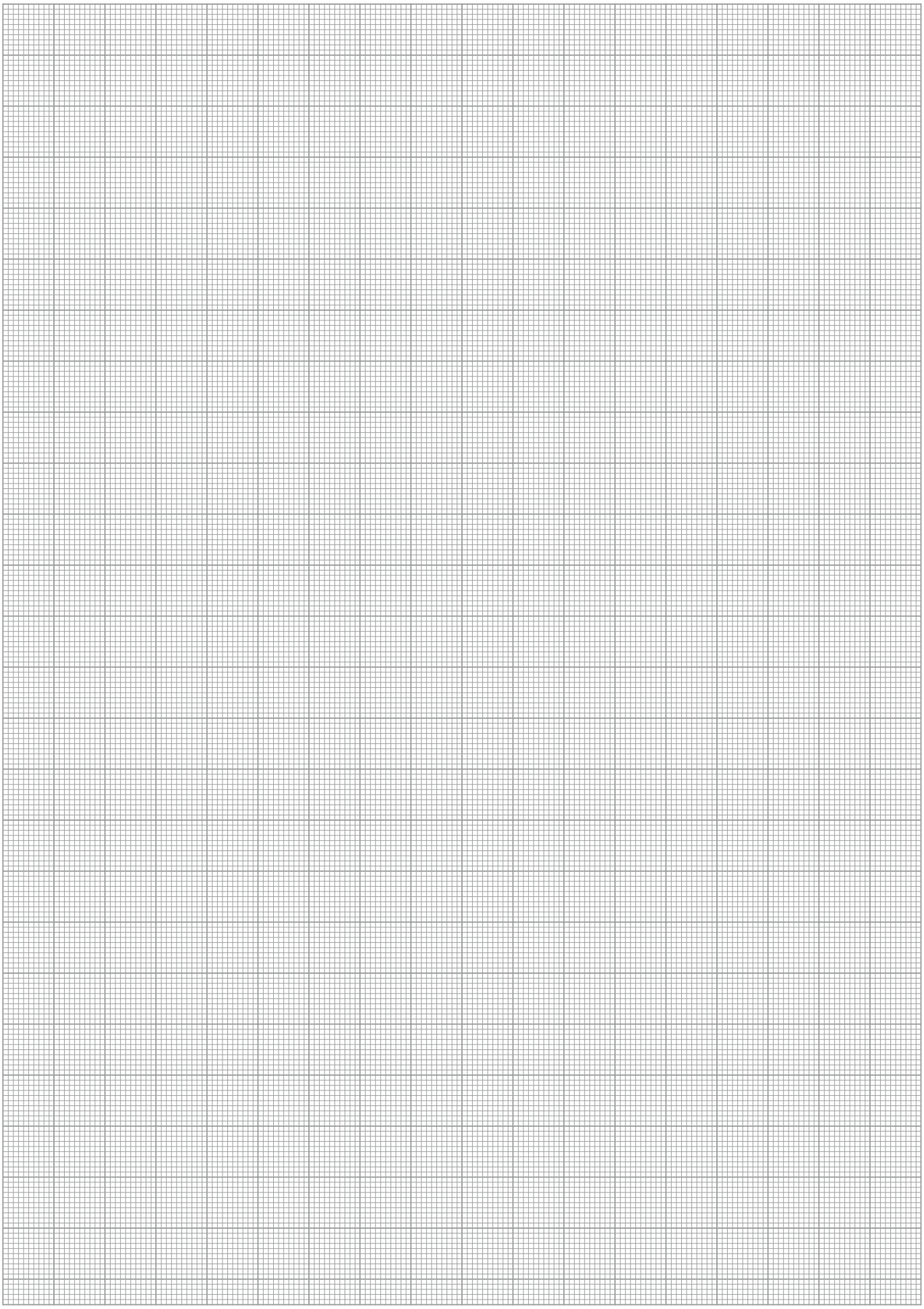

# SCHUNK Service

We can provide you with professional, reliable and comprehensive support. For you, SCHUNK Service means being on the safe side of efficiency. For us, it is an important part of our corporate philosophy. Our extensive range of service – from initial advice to after sales service – convinces with absolute reliability and technical knowledge.



## Individual service – for better results

- Hotline to our inside technical consultants
  weekdays from 7 a.m. to 6 p.m.
- Project-orientated, on-site technical advice at your location by our competent external consultants
- Extensive stock of standard products with lightning fast delivery service – world-wide!
- Detailed information about clamping and automation technology
- Training on innovations and SCHUNK-products – across the world in our local subsidiaries



## Online service – for a fast overview

All information in digital form, clearly structured and up-to-date on our website at www.schunk.com

- List of contact persons
- Online product search based on product designations
- Product news and trends
- Data sheets
- Order forms for easy and convenient ordering
- Free download area for pages from our product catalogs and technical data, for software and calculation programs for your gripping and rotary modules
- Free 2-D/3-D CAD design models, provided in a wide range of different CAD formats – for easy integration into your design!








# Subsidiaries



**GERMANY**
**HEAD OFFICE**
SCHUNK GmbH & Co. KG
Spann- und Greiftechnik
Bahnhofstr. 106-134
74348 Lauffen/Neckar
Tel. +49-7133-103-0
Fax +49-7133-103-2399
info@de.schunk.com
www.schunk.com



**CZECH REPUBLIC**
SCHUNK Intec s.r.o.
Ernsta Macha 1
643 00 Brno
Tel. +420-545 229 095
Fax +420-545 220 508
info@cz.schunk.com
www.cz.schunk.com



**INDIA**
SCHUNK Intec India Private Ltd.
# 80 B, Yeswanthpur
Industrial Suburbs,
Bangalore 560 022
Tel. +91-80-40538999
Fax +91-80-41277363
info@in.schunk.com
www.in.schunk.com



**POLAND**
SCHUNK Intec Sp.z o.o.
ul. Słoneczna 116 A
Stara Iwiczna
05-500 Piaseczno
Tel. +48-22-7262500
Fax +48-22-7262525
info@pl.schunk.com
www.pl.schunk.com



**SPAIN**
SCHUNK Intec S.L.
Foneria, 27
08304 Mataró (Barcelona)
Tel. +34-937 556 020
Fax +34-937 908 692
info@es.schunk.com
www.es.schunk.com



**AUSTRIA**
SCHUNK Intec GmbH
Holzbauernstr. 20
4050 Traun
Tel. +43-7229-65770-0
Fax +43-7229-65770-14
info@at.schunk.com
www.at.schunk.com



**DENMARK**
SCHUNK Intec A/S
Storhaven 7
7100 Vejle
Tel. +45-43601339
Fax +45-43601492
info@dk.schunk.com
www.dk.schunk.com



**ITALY**
SCHUNK Intec S.r.l.
Via Barozzo
22075 Lurate Caccivio (CO)
Tel. +39-031-4951311
Fax +39-031-4951301
info@it.schunk.com
www.it.schunk.com



**PORTUGAL**
Sales Representative
Victor Marques
Tel. +34-937-556 020
Fax +34-937-908 692
Mobil +351-963-786 445
info@pt.schunk.com
www.pt.schunk.com



**SWEDEN**
SCHUNK Intec AB
Morabergsvägen 28
152 42 Södertälje
Tel. +46-8 554 421 00
Fax +46-8 554 421 01
info@se.schunk.com
www.se.schunk.com





**BELGIUM,**
**LUXEMBOURG**
SCHUNK Intec N.V./S. A.
Bedrijvencentrum Regio Aalst
Industrielaan 4, Zuid III
9320 Aalst-Erembodegem
Tel. +32-53-853504
Fax +32-53-836022
info@be.schunk.com
www.be.schunk.com



**FRANCE**
SCHUNK Intec SARL
Parc d'Activités des Trois Noyers
15, Avenue James de Rothschild
Ferrières-en-Brie
77614 Marne-la-Vallée Cedex 3
Tel. +33-1-64 66 38 24
Fax +33-1-64 66 38 23
info@fr.schunk.com
www.fr.schunk.com

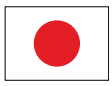

**JAPAN**
SCHUNK Intec K.K.
45-28 3-Chome Sanno
Ohta-Ku Tokyo 143-0023
Tel. +81-33-7743731
Fax +81-33-7766500
s-takano@tbk-hand.co.jp
www.tbk-hand.co.jp



**RUSSIA**
OOO SCHUNK Intec
ul. Samojlovoj, 5, lit. C
St. Petersburg 192102
Tel. +7-812-326-78-35
Fax +7-812-326-78-38
info@ru.schunk.com
www.ru.schunk.com





**SWITZERLAND,**
**LIECHTENSTEIN**
SCHUNK Intec AG
Im Ifang 12
8307 Effretikon
Tel. +41-523543131
Fax +41-523543130
info@ch.schunk.com
www.ch.schunk.com



**CANADA**
SCHUNK Intec Corp.
190 Britannia Road East,
Units 23-24
Mississauga, ON L4Z 1W6
Tel. +1-905-712-2200
Fax +1-905-712-2210
info@ca.schunk.com
www.ca.schunk.com





**GREAT BRITAIN,**
**IRELAND**
SCHUNK Intec Ltd.
Cromwell Business Centre
10 Howard Way,
Interchange Park
Newport Pagnell MK16 9QS
Tel. +44-1908-611127
Fax +44-1908-615525
info@gb.schunk.com
www.gb.schunk.com





**MEXICO, VENEZUELA**
SCHUNK Intec S.A. de C.V.
Calle Pirineos # 513 Nave 6
Zona Industrial Benito Juárez
Santiago de Querétaro,
Qro. 76120
Tel. +52-442-211-7800
Fax +52-442-211-7829
info@mx.schunk.com
www.mx.schunk.com



**SLOVAKIA**
SCHUNK Intec s.r.o.
Mostná 62
949 01 Nitra
Tel. +421-37-3260610
Fax +421-37-6421906
info@sk.schunk.com
www.sk.schunk.com



**TURKEY**
SCHUNK Intec
Bağlama Sistemleri ve
Otomasyon San. ve Tic. Ltd. Şti.
Küçükyalı Iş Merkezi
Girne Mahallesi
Irmak Sokak, A Blok, No: 9
34852 Maltepe, Istanbul
Tel. +90-216-366-2111
Fax +90-216-366-2277
info@tr.schunk.com
www.tr.schunk.com



**CHINA**
SCHUNK Intec Precision
Machinery Trading (Shanghai)
Co., Ltd.
Xinzhuang Industrial Park
479 Chundong Road
Minhang District
Shanghai 201108
Tel. +86-21-51760266
Fax +86-21-51760267
info@cn.schunk.com
www.cn.schunk.com



**HUNGARY**
SCHUNK Intec Kft.
Széchenyi út. 70.
3530 Miskolc
Tel. +36-46-50900-7
Fax +36-46-50900-6
info@hu.schunk.com
www.hu.schunk.com



**NETHERLANDS**
SCHUNK Intec B.V.
Speldenmakerstraat 3d
5232 BH 's-Hertogenbosch
Tel. +31-73-6441779
Fax +31-73-6448025
info@nl.schunk.com
www.nl.schunk.com



**SOUTH KOREA**
SCHUNK Intec Korea Ltd.
# 907 Joongang
Induspia 2 Bldg.,
144-5 Sangdaewon-dong,
Jungwon-gu, Seongnam-si,
Kyunggi-do, 462-722
Tel. +82-31-7376141
Fax +82-31-7376142
info@kr.schunk.com
www.kr.schunk.com



**USA**
SCHUNK Intec Inc.
211 Kitty Hawk Drive
Morrisville, NC 27560
Tel. +1-919-572-2705
Fax +1-919-572-2818
info@us.schunk.com
www.us.schunk.com

12.05.10

# Distribution partners

## ARGENTINA

Ruben Costantini S.A.
Ingeniero Luis Angel Huergo 1320
Parque Industrial
2400 San Francisco-Córdoba
Tel. +54-3564-421033
Fax +54-3564-428877
alejandro.costantini@costantini-sa.com
www.costantini-sa.com

## AUSTRALIA

ROMHELD AUTOMATION PTY. LTD.
Unit 30 / 115 Woodpark Road
Smithfield NSW 2164
Tel. +61-2-9721 1799
Fax +61-2-9721 1766
sales@romheld.com.au
www.romheld.com.au

## BRAZIL

Prodromus Automação Ltda.
Av. Gen. Cavalcanti de
Albuquerque, 123
CEP 05638-010 São Paulo, SP
Tel. +55-11-37410897
Fax +55-11-37467997
prodromus@prodromus.com.br
www.prodromus.com.br

Sanches Blanes S.A.
Estrada de Sapopemba, KM 41
CEP 09436-000 Ribeirao Pires, SP
Tel. +55-11-48242742
Fax +55-11-48279009
vendas@sanchesblanes.com.br
www.sanchesblanes.com.br

## CHILE

COMERCIAL ARANEDA
Y CIA. LTDA.
Quinta Normal
Vargas Fontecilla # 4550,
Santiago
Tel. +56-2-7248123
Fax +56-2-7102036
caraneda@rotar.cl
www.rotar.cl

## COLOMBIA

CAV - Control y
Automatización Virtual Ltda.
Avenida Esperanza N. 72B
43 Oficina 101
Bogotá D.C.
Tel. +57-1-2952110
Fax +57-1-4109846
info@cavingenieros.com
www.cavingenieros.com

## CROATIA

BIBUS Zagreb d.o.o.
Anina 91
10000 Zagreb
Tel. +385-13818006
Fax +385-13818005
bibus@bibus.hr
www.bibus.hr

## CZECH REPUBLIC

BIBUS s.r.o.
Videňská 125
63927 Brno
Tel. +420-5 47 12 53 26
Fax +420-5 47 12 53 10
adam@bibus.cz
www.bibus.cz

## ESTONIA

DV-Tools OÜ
Peterburi tee 34/4
11415, Tallinn
Mobile Phone +372-56-655954
Fax +372-68-53974
info@dv-tools.ee

## FINLAND

Nurminen Tools Oy
Vanha Vantontie 2
21100 Naantali
Tel. +358-2-4389668
Fax +358-2-4389669
sales@nurminentools.fi
www.nurminentools.fi

## GREECE

Georg Gousoulis Co. O.E.
27, Riga Fereou Str.
14452 Metamorfosi-Athens
Tel. +30-210-2846771/2
Fax +30-210-2824568
mail@gousoulis.gr
www.gousoulis.gr

## HUNGARY

IMI International KFT.
Norgren Division
Nagykörösi UT 99
1205 Budapest
Tel. +36-1-421-4031
Fax +36-1-284-8980
tamas.kesmarki@norgren.hu
www.norgren.hu

## ICELAND

Formula 1 ehf
Breidamörk 25
P.O. Box 1 61
810 Hveragerdi
Tel. +354-5172200
Fax +354-5172201
formula1@formula1.is

## INDONESIA

PT. Metaltech Indonesia
Jl, Gatot Subroto Km. 8
Tangerang 15136
Tel. +62-21-55657435
Fax +62-21-5912155
santek_trade@yahoo.com

## IRAN

Iran Int. Procurement of
Industries Co. (I.I.P.I.)
No. 10, First alley
Golshan St., Khoramshahr Ave.
Tehran, 1554814771
Tel. +98-21-8875 0965
Fax +98-21-8875 0966
info@iipico.com

## ISRAEL

Ilan and Gavish
Automation Service Ltd.
26, Shenkar St.
Qiryat-Arie 49513
P.O. Box 10118,
Petach-Tikva 49001
Tel. +972-3-9221824
Fax +972-3-9240761
sigal@ilan-gavish.com
www.ilan-gavish.co.il

M. K. Sales
Arimon 41 St.
Mosave Gealya 76885
Tel. +972-528-283391
Fax +972-8-9366026
moti@mk-sales.com
www.mk-sales.com

## JAPAN

BIG Daishowa Seiki Co., Ltd.
Aihara Koyamada Juei 510,
Goshiki-cho, Sumoto-shi,
Hyogo, 656-1317, Japan
Tel. +81-799-320115
Fax +81-799-320117
export@big-net.ne.jp
www.big-net.ne.jp

## MALAYSIA

SK-TEC
Automation & Engineering Sdn. Bhd
No. 54-A, Jalan PU7/3
Taman Puchong Utama,
47100 Puchong,
Selangor Darul Ehsan
Tel. +603-8060-8771
Fax +603-8060-8772
jeffery.koo@sk-tec.com.my
www.sk-tec.com.my

Precisetech Sdn. Bhd
Plant 1
15 Lorong Perusahaan Maju 11
13600 Perai, Pulau Pinang
Tel. +604-5080288
Fax +604-5080988
sales@precisetech.com.my
www.precisetech.com.my

## NORWAY

Sivilingeniør Sture Hedløv a.s
Kjellstad Næringssenter
3400 Lier
Tel. +47-32-846588
Fax +47-32-847017
harald@hedloev.no
www.hedloev.no

## POLAND

BIBUS MENOS Sp. z.o.o.
UL. Tadeusza Wendy 7/9
81-341 Gdynia
Tel. +48-586609596
Fax +48-586617132
mk@bimen.com.pl
www.bimen.com.pl

## ROMANIA

S.C. INMAACRO S.R.L.
Industrial Machines and
Accessories Romania
Bronzului 7, BL 509A, AP 8
500169 Brasov
Tel. +40-268-423450
Fax +40-268-423045
dan.popescu@inmaacro.com
www.inmaacro.com

## RUSSIA

Haltec Ltd.
27/31 Radischeva str.
432071 Ulyanovsk
Tel. +7-(8422)-31-07-38
Fax +7-(8422)-31-06-01
info@haltec.ru
www.haltec.ru

## SAUDI ARABIA

Alruqee Machine Tools Co. Ltd.
Head Office
P.O. Box 36 57
Alkhobar 31952
Tel. +966-3-8470449
Fax +966-3-8474992
mailbox2@alruqee.com
www.alruqee.net

Automation
Toolholding Systems
Stationary Workholding
Chuck Jaws
Lathe Chucks

## SINGAPORE

Balluff Asia Pte Ltd.
BLK 1004,
Toa Payoh Industrial Park
Lorong 8, # 03-1489
Singapore 319076
Tel. +65-62524384
Fax +65-62529060
alvin@balluff.com.sg
www.balluff.com.sg

APS - Automation & Production
Systems PTE. Ltd.
46, East Coast Road
# 06-03, Eastgate
Singapore 428766
Tel. +65-64695810
Fax +65-68994412
apspl@singnet.com.sg

Eureka Tools Pte Ltd
194 Pandan Loop
# 04-10 Pantech
Industrial Complex
Singapore 128383
Tel. +65-68745781
Fax +65-68745782
eureka@eureka.com.sg
www.eureka.com.sg

## SLOVAKIA

BIBUS SK, s.r.o.
Trnavska 31
94901 Nitra
Tel. +421-37-7777911
Fax +421-37-7777999
sale@bibus.sk
www.bibus.sk

## SLOVENIA

MB-Naklo
Trgovsko Podjetje D.O.O.
Toma Zupana 16
04202 Naklo
Tel. +386-42-771700
Fax +386-42-771717
mb-naklo@mb-naklo.si
www.mb-naklo.si

## SOUTH AFRICA

AGM Maschinenbau (Pty) Ltd.
P.O. Box 4246
Germiston South, 1411
Tel. +27-11-825-4246
Fax +27-11-872-0690
agrau@iafrica.com
www.agm-maschinenbau.co.za

Retecon (Pty) Ltd.
P.O. Box 1472,
Kempton Park 1620
Tel. +27-11-9768600
Fax +27-11-3942471
tools@retecon.co.za
www.retecon.co.za

## SOUTH KOREA

MAPAL HiTECO Co., Ltd.
1NA-502, Shiwha Ind. Complex
1254-10, Jungwang-dong,
Shihung-city
Kyunggi-do, 429-450
Tel. +82-31-3190-860
Fax +82-31-3190-861
hiteco@kornet.net
www.hiteco.co.kr

## TAIWAN

Yonchin Enterprises, Inc.
P.O. Box 26-13
5F, No. 100,
Hsing Der Rd.,
San Chung City 241, Hsin Taipei
Tel. +886-2-2278-9330
Fax +886-2-2278-9320
yon.chin@msa.hinet.net

Danyao Trading Co., Ltd.
7 F, No. 19, Chung-Cheng Rd.
Hsin Chuang City, 242
Taipei County, Taiwan
Tel. +886-2-22768200
Fax +886-2-22767573
E-Mail: danyao@ms22.hinet.net

## THAILAND

THAI PRECISION
ENGINEERING Co., Ltd.
No. 2, 2nd Floor, OSC Bldg.,
99 Moo 5, Kingkaew Road
Rachatewa, Bangplee
Samutprakarn 10540 Thailand
Tel. +66-2-1782178
Fax +66-2-1782176
info@thai-precision.com

## UKRAINE

DE&TC «Contact» JSC
5, Kabardinskaya str.
49006, Dnipropetrovs'k
Tel. +38-0562-317 614
Fax +38-0562-317 646
admin@contakt.dp.ua
www.kontakt.dp.ua

## VENEZUELA

Alpin de Venezuela, C.A.
Calle G - Residencias Rosita
Local No. 6-P.B.-El Paraiso
Sector El Pinar-Caracas 1020
Tel. +58-212-4510484
Fax +58-212-4515886
alpven@cantv.net

# Plants

## Germany



### Lauffen/Neckar, Sales and Production Toolholding and Workholding

SCHUNK GmbH & Co. KG · Spann- und Greiftechnik
Bahnhofstr. 106 - 134 · 74348 Lauffen/Neckar
Tel. +49-7133-103-0 · Fax +49-7133-103-2399
info@de.schunk.com · www.schunk.com




### Brackenheim-Hausen, Sales and Production Automation

SCHUNK GmbH & Co. KG · Spann- und Greiftechnik
Robert-Bosch-Str. 12 · 74336 Brackenheim-Hausen
Hotline Technical Sales +49-7133-103-2503
Hotline Technical Support +49-7133-103-2696
Fax +49-7133-103-2189
automation@de.schunk.com · www.schunk.com



### Mengen, Sales and Production Lathe Chucks

H.-D. SCHUNK GmbH & Co. Spanntechnik KG
Lothringer Str. 23 · 88512 Mengen
Tel. +49-7572-7614-0 · Fax +49-7572-7614-1099
futter@de.schunk.com · www.schunk.com

## International




### Morrisville/North Carolina, USA

SCHUNK Intec Inc.
211 Kitty Hawk Drive · Morrisville, NC 27560
Tel. +1-919-572-2705 · Fax +1-919-572-2818
info@us.schunk.com · www.us.schunk.com

**Copyright**
All text drawings and product illustrations are subject to copyright and are the property of SCHUNK GmbH & Co. KG
**Technical Changes**
The data and illustrations in this catalogue are not binding and only provide an approximate description. We reserve the right to make changes to the product delivered compared with the data and illustrations in this catalogue, e.g. in respect of technical data, design, fittings, material and external appearance.

# Fax Order

**Copy, complete, fax to** **+49-7133-103-2189**

Company

Name

Department

Street

ZIP City

Tel. Fax

## Order



| Pos. | Quantity | Type | ID |
|---|---|---|---|
| 1 | | | |
| 2 | | | |
| 3 | | | |
| 4 | | | |
| 5 | | | |
| 6 | | | |
| 7 | | | |
| 8 | | | |
| 9 | | | |
| 10 | | | |

The general terms of sales and conditions of SCHUNK GmbH & Co. KG apply.

Date Signature

**SCHUNK GmbH & Co. KG**
**Spann- und Greiftechnik**
Bahnhofstr. 106 - 134
D-74348 Lauffen/Neckar
Hotline Technical Sales +49-7133-103-2503
Hotline Technical Support +49-7133-103-2696
Fax +49-7133-103-2189
automation@de.schunk.com
www.schunk.com

Reg. No. DE-003496 QM

# Catalog Order

**Copy, complete, fax to** **+49-7133-103-2779**

## Automation

☐ Complete program Automation



☐ Gripping Modules



☐ Rotary Modules



☐ Linear Modules



☐ Robot Accessories



☐ Modular Assembly Technology



☐ Machine Vision



☐ Automation Product Overview



☐ Modular Assembly Technology Product Overview

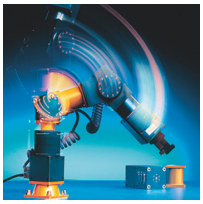

☐ Modular Robotics



☐ Industry Solutions

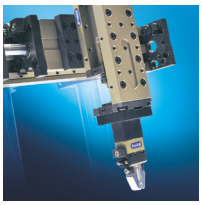

☐ Highlights
New Products



☐ Universal Rotary Actuator SRU-plus

## Toolholding and Workholding

☐ Complete program Toolholding and Workholding



☐ Toolholding Systems



☐ Stationary Workholding



☐ Lathe Chucks



☐ Chuck Jaws



☐ Product Overview



☐ Hydraulic Expansion Technology
Special Solutions



☐ Magnetic Clamping Technology



☐ Highlights
New Products

Company

Name

Department

Street

ZIP City

Tel. Fax


**SCHUNK GmbH & Co. KG**
**Spann- und Greiftechnik**
Bahnhofstr. 106 - 134
D-74348 Lauffen/Neckar
Tel. +49-7133-103-0
Fax +49-7133-103-2399
info@de.schunk.com
www.schunk.com


Quality Management ISO 9001:2000
Reg. No. DE-003496 QM

"The desire to automate handling applications is our inspiration for solutions that help you succeed."

Heinz-Dieter Schunk




www.schunk.com

9952 154 - ZM - 05/2010