PRZYKŁAD 1

Obliczyć i narysować obciążenie tarczy:

$$F(x,y) = A(x^3 + y^2 x)$$

funkcja naprężeń

$A = 40$, $h = 6\ m$, $l = 5\ cm$

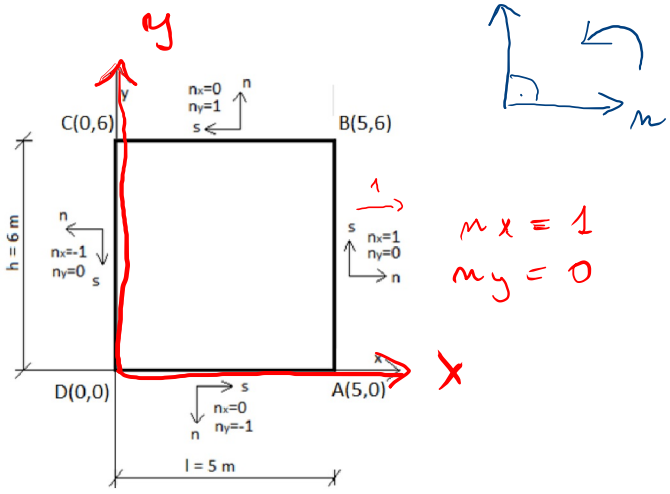

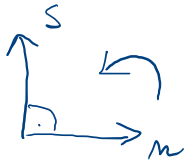

$m_x = 1$

$m_y = 0$

Naprężenia:

$$F(x,y) = 40(x^3 + y^2x) = 40x^3 + 40y^2x$$

$$\frac{dF}{dx} = 40 \cdot 3 \cdot x^2 + 40 \cdot y^2 = 120x^2 + 40y^2$$

$$\frac{d^2F}{dx^2} = 120 \cdot 2 \cdot x = 240x \rightarrow \boldsymbol{\sigma_y = 240x}$$

$$\frac{dF}{dy} = 40 \cdot 2 \cdot y \cdot x = 80xy$$

$$\frac{d^2F}{dy^2} = 80x \rightarrow \boldsymbol{\sigma_x = 80x}$$

$$\tau_{xy} = -\frac{d^2F}{d_x d_y}$$

$$\boldsymbol{\tau_{xy} = -80y}$$

$$\begin{bmatrix} 80x & -80y \\ -80y & 240x \end{bmatrix}$$

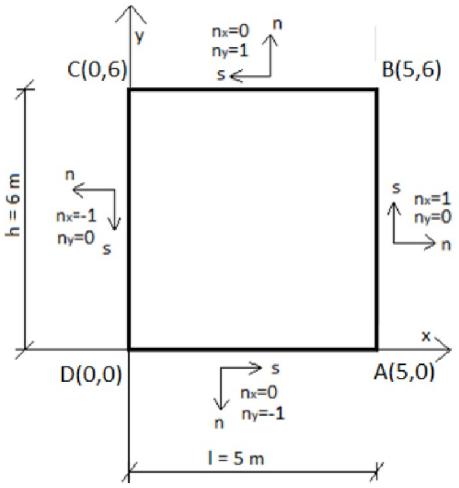

$$p_{nn} = \sigma_x n_x^2 + 2\tau_{xy} n_x n_y + \sigma_y n_y^2$$

- **Krawędź AB**

$$A(5,0),\ \ B(5,6)$$
$$n_x = 1,\ \ n_y = 0$$

$$2\tau_{xy} n_x n_y = 0,\ \ \sigma_y n_y^2 = 0$$

$$p_{nn,AB} = \sigma_x n_x^2 = 80x \cdot 1^2 = 80x$$

$$p_{nn,AB}^{A} = 80 \cdot 5 = 400$$

$$p_{nn,AB}^{B} = 80 \cdot 5 = 400$$

Wykres obciążenia tarczy p_{nn}

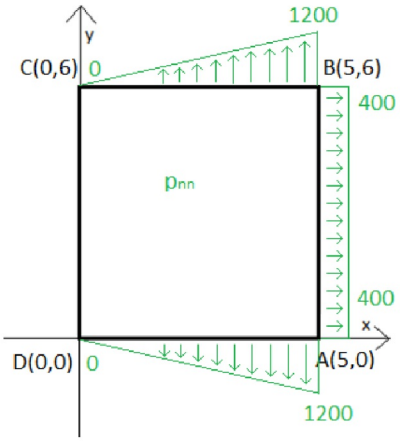

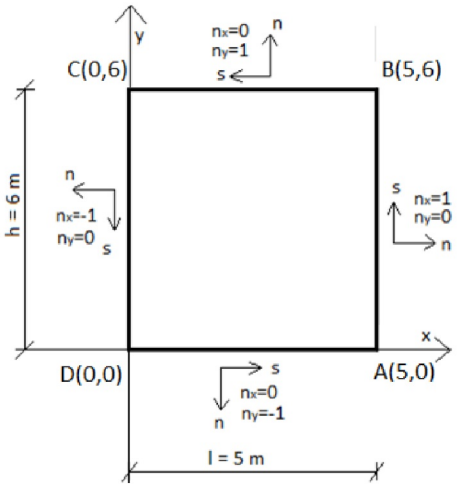

$$p_{nn} = \sigma_x n_x^2 + 2\tau_{xy} n_x n_y + \sigma_y n_y^2$$

- **Krawędź BC**

$$B(5,6),\ \ C(0,6)$$
$$n_x = 0,\ \ n_y = 1$$

$$2\tau_{xy} n_x n_y = 0,\ \ \sigma_x n_x^2 = 0$$

$$p_{nn,AB} = \sigma_y n_y^2 = 240x \cdot 1^2 = 240x$$

$$p^B_{nn,BC} = 240 \cdot 5 = 1200$$

$$p^C_{nn,BC} = 240 \cdot 0 = 0$$

Wykres obciążenia tarczy p_{nn}

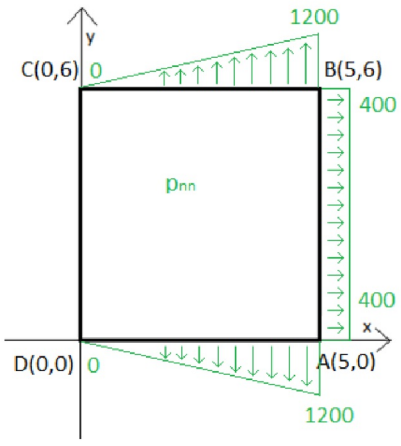

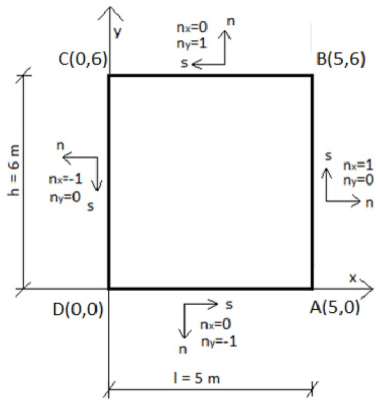

$$p_{nn} = \sigma_x n_x^2 + 2\tau_{xy} n_x n_y + \sigma_y n_y^2$$

- **Krawędź CD**

$$C(0,6),\ \ D(0,0)$$
$$n_x = -1,\ \ n_y = 0$$

$$2\tau_{xy} n_x n_y = 0,\ \ \sigma_y n_y^2 = 0$$

$$p_{nn,CD} = \sigma_x n_x^2 = 80x \cdot (-1)^2 = 80x$$

$$p_{nn,CD}^C = 80 \cdot 0 = 0$$

$$p_{nn,CD}^D = 80 \cdot 0 = 0$$

Wykres obciążenia tarczy p_{nn}

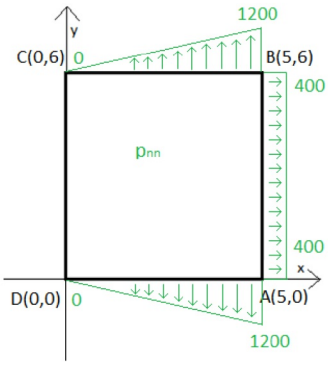

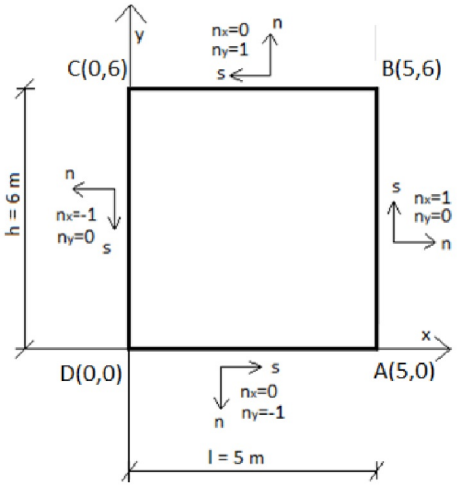

$$p_{nn} = \sigma_x n_x^2 + 2\tau_{xy} n_x n_y + \sigma_y n_y^2$$

- **Krawędź DA**

$$D(0,0),\ \ A(5,0)$$
$$n_x = 0,\ \ n_y = -1$$

$$2\tau_{xy} n_x n_y = 0,\ \ \sigma_x n_x^2 = 0$$

$$p_{nn,DA} = \sigma_y n_y^2 = 240x \cdot (-1)^2 = 240x$$

$$p^D_{nn,DA} = 240 \cdot 0 = 0$$

$$p^A_{nn,DA} = 240 \cdot 5 = 1200$$

Wykres obciążenia tarczy p_{nn}

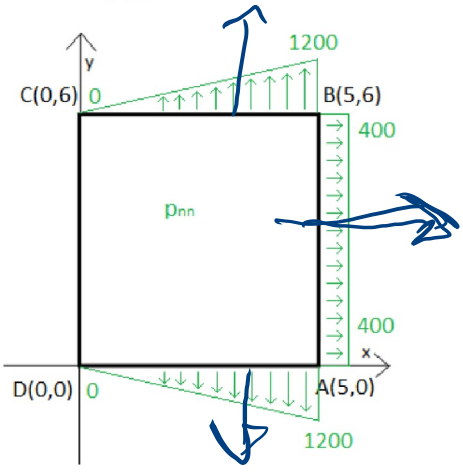

400 · 6 = 2400

Obciążenia tarczy p_{ns}

$$p_{ns} = (\sigma_y - \sigma_x) n_x n_y + \tau_{xy}(n_x^2 - n_y^2)$$

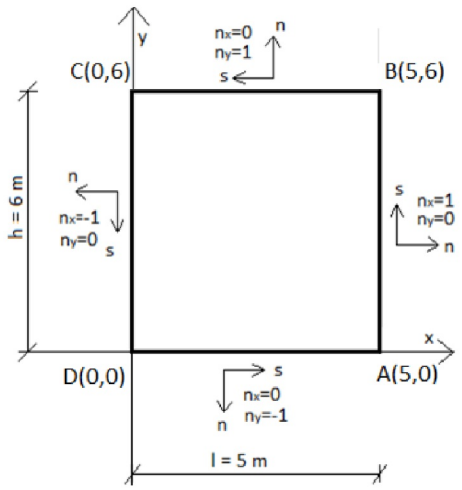

- **Krawędź AB**

$$A(5,0),\ \ B(5,6)$$
$$n_x = 1,\ \ n_y = 0$$

$$(\sigma_y - \sigma_x) n_x n_y = 0$$

$$p_{ns,AB} = \tau_{xy}(n_x^2 - n_y^2) = -80y \cdot (1^2 - 0^2) = -80y \cdot 1 = -80y$$

$$p_{ns,AB}^A = -80 \cdot 0 = 0$$

$$p_{ns,AB}^B = -80 \cdot 6 = -480$$

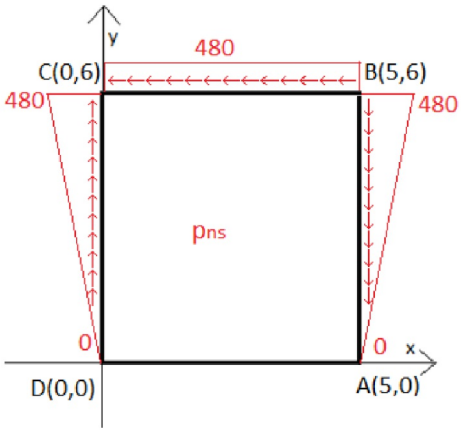

- **Krawędź BC**

$$B(5,6),\ \ C(0,6)$$
$$n_x = 0,\ \ n_y = 1$$

$$(\sigma_y - \sigma_x) n_x n_y = 0$$

$$p_{ns,BC} = \tau_{xy}\left(n_x{}^2 - n_y{}^2\right) = -80y \cdot (0^2 - 1^2) = -80y \cdot (-1) = 80y$$

$$p^B_{ns,BC} = 80 \cdot 6 = 480$$

$$p^C_{ns,BC} = 80 \cdot 6 = 480$$

- **Krawędź CD**

$$C(0,6),\ \ D(0,0)$$
$$n_x = -1,\ \ n_y = 0$$

$$(\sigma_y - \sigma_x) n_x n_y = 0$$

$$p_{ns,CD} = \tau_{xy}\left(n_x{}^2 - n_y{}^2\right) = -80y \cdot ((-1)^2 - 0^2) = -80y \cdot 1 = -80y$$

$$p^C_{ns,CD} = -80 \cdot 6 = -480$$

$$p^D_{ns,CD} = -80 \cdot 0 = 0$$

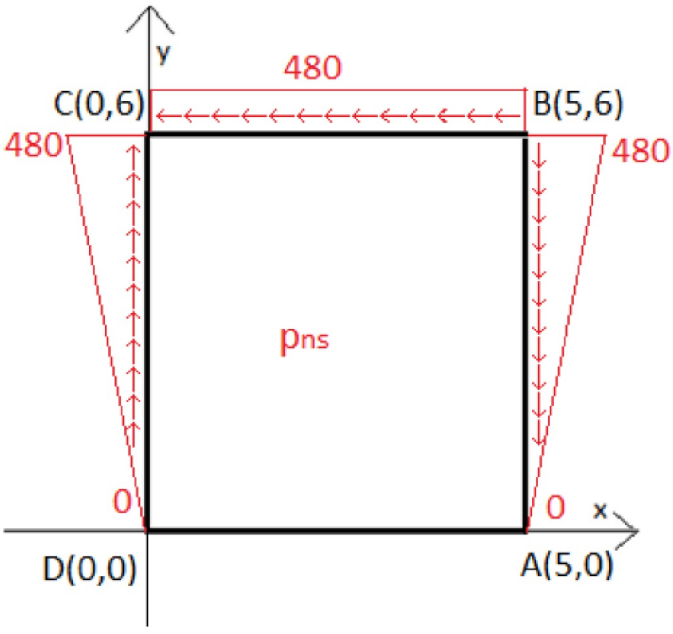

- **Krawędź DA**

$$D(0,0),\ \ A(5,0)$$
$$n_x = 0,\ \ n_y = -1$$

$$(\sigma_y - \sigma_x) n_x n_y = 0$$

$$p_{ns,DA} = \tau_{xy}\left(n_x{}^2 - n_y{}^2\right) = -80y \cdot (0^2 - (-1)^2) = -80y \cdot (-1) = 80y$$

$$p^D_{ns,DA} = 80 \cdot 0 = 0$$

$$p^A_{ns,DA} = 80 \cdot 0 = 0$$

480 · 5 = 2400

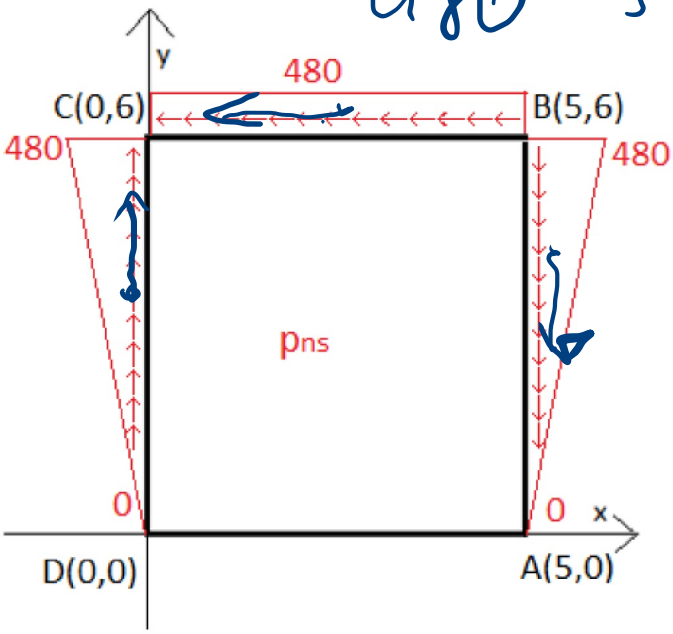

$$p_{nn} = \sigma_x n_x^2 + 2\tau_{xy} n_x n_y + \sigma_y n_y^2$$

$$p_{ns} = (\sigma_y - \sigma_x) n_x n_y + \tau_{xy}\left(n_x^2 - n_y^2\right)$$

$\tau_{xy}\left(n_x^2 - n_y^2\right)$

PRZYKŁAD 2

Obliczyć i narysować obciążenie tarczy:

$$F(x,y) = A(x^3 + y^2 x)$$

$A = 40$, $h = 6\ m$, $l = 5\ cm$

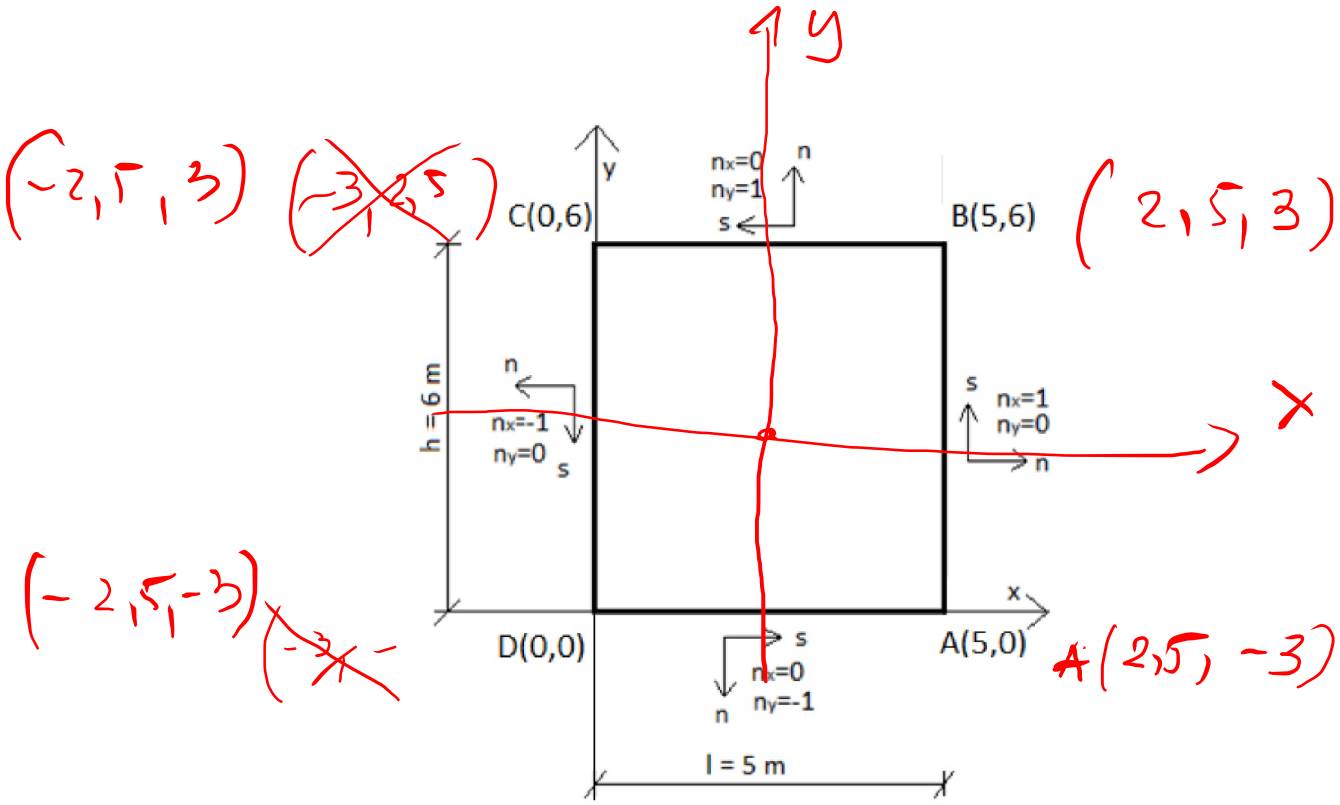

Naprężenia:

$$F(x,y) = 40(x^3 + y^2x) = 40x^3 + 40y^2x$$

$$\frac{dF}{dx} = 40 \cdot 3 \cdot x^2 + 40 \cdot y^2 = 120x^2 + 40y^2$$

$$\frac{d^2F}{dx^2} = 120 \cdot 2 \cdot x = 240x \rightarrow \boldsymbol{\sigma_y = 240x}$$

$$\frac{dF}{dy} = 40 \cdot 2 \cdot y \cdot x = 80xy$$

$$\frac{d^2F}{dy^2} = 80x \rightarrow \boldsymbol{\sigma_x = 80x}$$

$$\tau_{xy} = \frac{-d^2F}{d_x d_y}$$

$$\boldsymbol{\tau_{xy} = -80y}$$

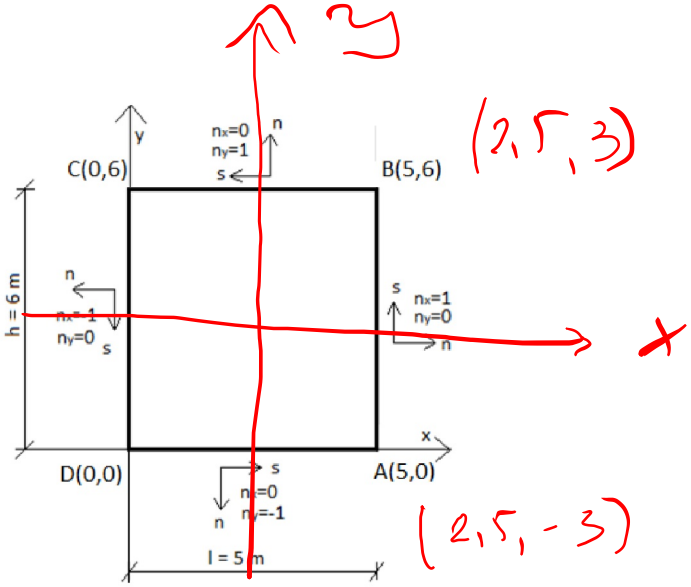

$$p_{nn} = \sigma_x n_x^2 + 2\tau_{xy} n_x n_y + \sigma_y n_y^2$$

- **Krawędź AB**

$$A(5,0),\ \ B(5,6)$$
$$n_x = 1,\ \ n_y = 0$$

$$2\tau_{xy} n_x n_y = 0,\ \ \sigma_y n_y^2 = 0$$

$$p_{nn,AB} = \sigma_x n_x^2 = 80x \cdot 1^2 = 80x$$

$$p^A_{nn,AB} = 80 \cdot 5 = 400$$

$$p^B_{nn,AB} = 80 \cdot 5 = 400$$

Wykres obciążenia tarczy p_{nn}

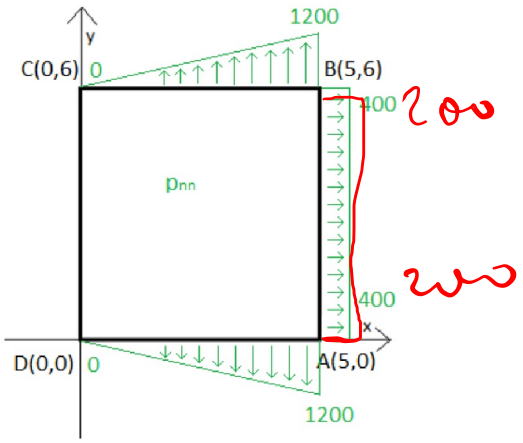

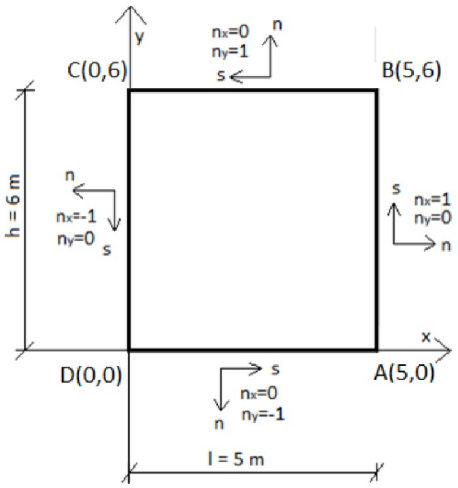

$$\boldsymbol{p_{nn} = \sigma_x n_x^2 + 2\tau_{xy} n_x n_y + \sigma_y n_y^2}$$

- **Krawędź BC**

$$B(5,6),\ \ C(0,6)$$
$$n_x = 0,\ \ n_y = 1$$

$$2\tau_{xy} n_x n_y = 0,\ \ \sigma_x n_x^2 = 0$$

$$p_{nn,AB} = \sigma_y n_y^2 = 240x \cdot 1^2 = 240x$$

$$p^B_{nn,BC} = 240 \cdot 5 = 1200$$

$$p^C_{nn,BC} = 240 \cdot 0 = 0$$

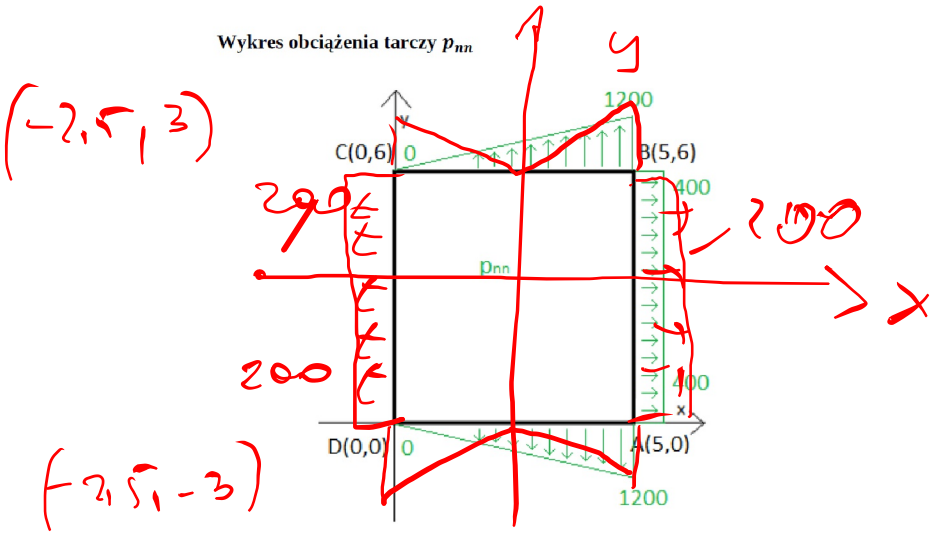

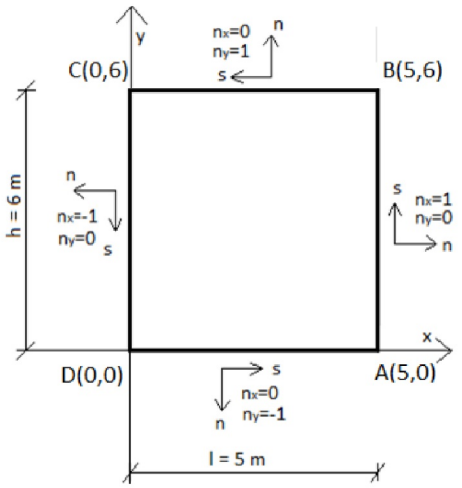

$$p_{nn} = \sigma_x n_x^2 + 2\tau_{xy} n_x n_y + \sigma_y n_y^2$$

- **Krawędź CD**

$$C(0,6),\ D(0,0)$$
$$n_x = -1,\ n_y = 0$$

$$2\tau_{xy} n_x n_y = 0,\ \ \sigma_y n_y^2 = 0$$

$$p_{nn,CD} = \sigma_x n_x^2 = 80x \cdot (-1)^2 = 80x$$

$$p_{nn,CD}^C = 80 \cdot 0 = 0$$

$$p_{nn,CD}^D = 80 \cdot 0 = 0$$

Wykres obciążenia tarczy p_{nn}

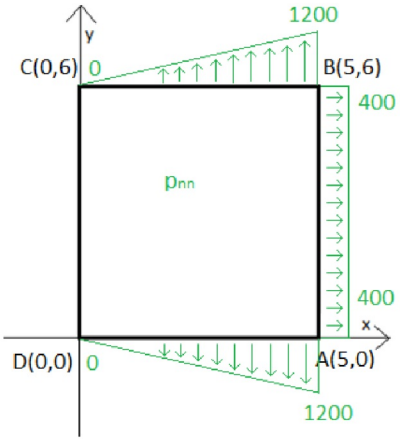

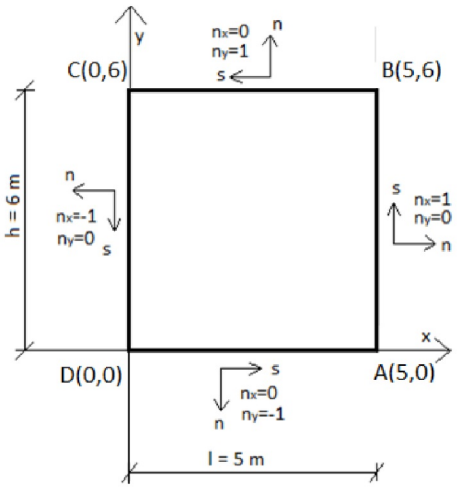

$$\boldsymbol{p_{nn} = \sigma_x n_x^2 + 2\tau_{xy} n_x n_y + \sigma_y n_y^2}$$

- **Krawędź DA**

$$D(0,0),\ \ A(5,0)$$
$$n_x = 0,\ \ n_y = -1$$

$$2\tau_{xy} n_x n_y = 0,\ \ \sigma_x n_x^2 = 0$$

$$p_{nn,DA} = \sigma_y n_y^2 = 240x \cdot (-1)^2 = 240x$$

$$p_{nn,DA}^{D} = 240 \cdot 0 = 0$$

$$p_{nn,DA}^{A} = 240 \cdot 5 = 1200$$

Wykres obciążenia tarczy p_{nn}

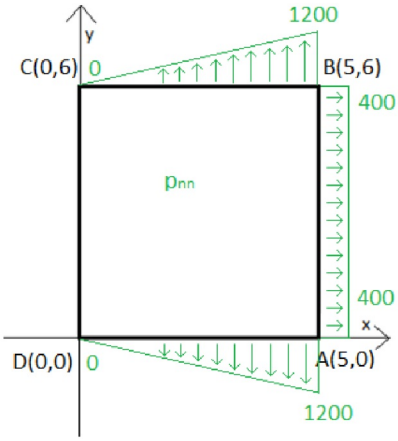

Obciążenia tarczy p_{ns}

$$p_{ns} = (\sigma_y - \sigma_x) n_x n_y + \tau_{xy}(n_x^2 - n_y^2)$$

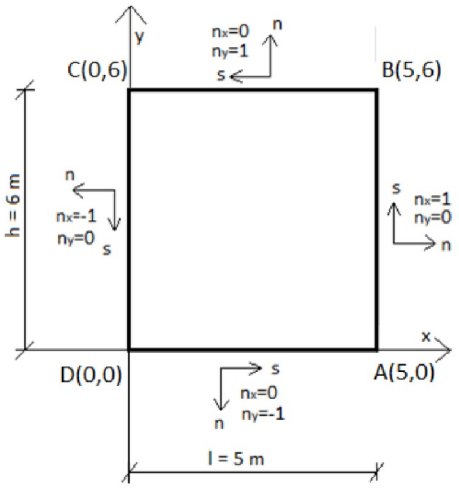

- **Krawędź AB**

$$A(5,0),\ \ B(5,6)$$
$$n_x = 1,\ \ n_y = 0$$

$$(\sigma_y - \sigma_x) n_x n_y = 0$$

$$p_{ns,AB} = \tau_{xy}\left(n_x{}^2 - n_y{}^2\right) = -80y \cdot (1^2 - 0^2) = -80y \cdot 1 = -80y$$

$$p^A_{ns,AB} = -80 \cdot 0 = 0$$

$$p^B_{ns,AB} = -80 \cdot 6 = -480$$

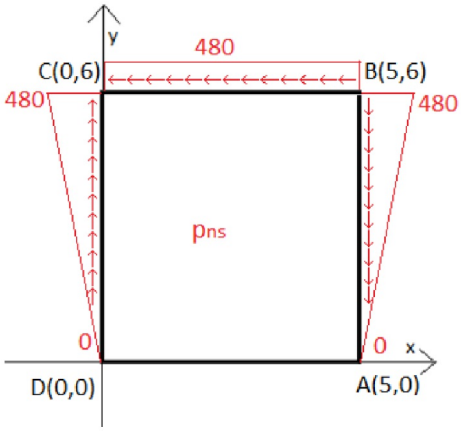

- **Krawędź BC**

$$B(5,6),\ \ C(0,6)$$
$$n_x = 0,\ \ n_y = 1$$

$$(\sigma_y - \sigma_x) n_x n_y = 0$$

$$p_{ns,BC} = \tau_{xy}\left(n_x{}^2 - n_y{}^2\right) = -80y \cdot (0^2 - 1^2) = -80y \cdot (-1) = 80y$$

$$p^B_{ns,BC} = 80 \cdot 6 = 480$$

$$p^C_{ns,BC} = 80 \cdot 6 = 480$$

- **Krawędź CD**

$$C(0,6),\ \ D(0,0)$$
$$n_x = -1,\ \ n_y = 0$$

$$(\sigma_y - \sigma_x) n_x n_y = 0$$

$$p_{ns,CD} = \tau_{xy}\left(n_x{}^2 - n_y{}^2\right) = -80y \cdot ((-1)^2 - 0^2) = -80y \cdot 1 = -80y$$

$$p^C_{ns,CD} = -80 \cdot 6 = -480$$

$$p^D_{ns,CD} = -80 \cdot 0 = 0$$

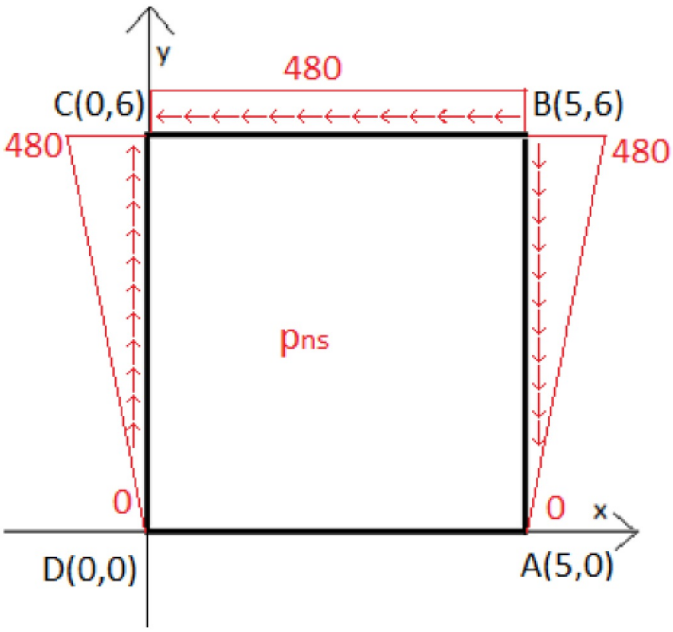

- **Krawędź DA**

$$D(0,0),\ \ A(5,0)$$
$$n_x = 0,\ \ n_y = -1$$

$$(\sigma_y - \sigma_x) n_x n_y = 0$$

$$p_{ns,DA} = \tau_{xy}\left(n_x{}^2 - n_y{}^2\right) = -80y \cdot (0^2 - (-1)^2) = -80y \cdot (-1) = 80y$$

$$p^D_{ns,DA} = 80 \cdot 0 = 0$$

$$p^A_{ns,DA} = 80 \cdot 0 = 0$$

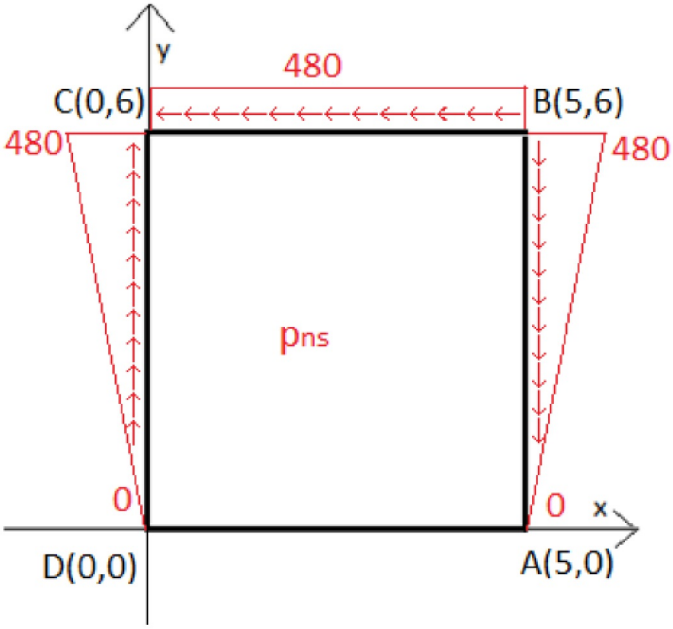

PRZYKŁAD 3

Obliczyć i narysować obciążenie tarczy:

F(X,Y) =C x^2 y

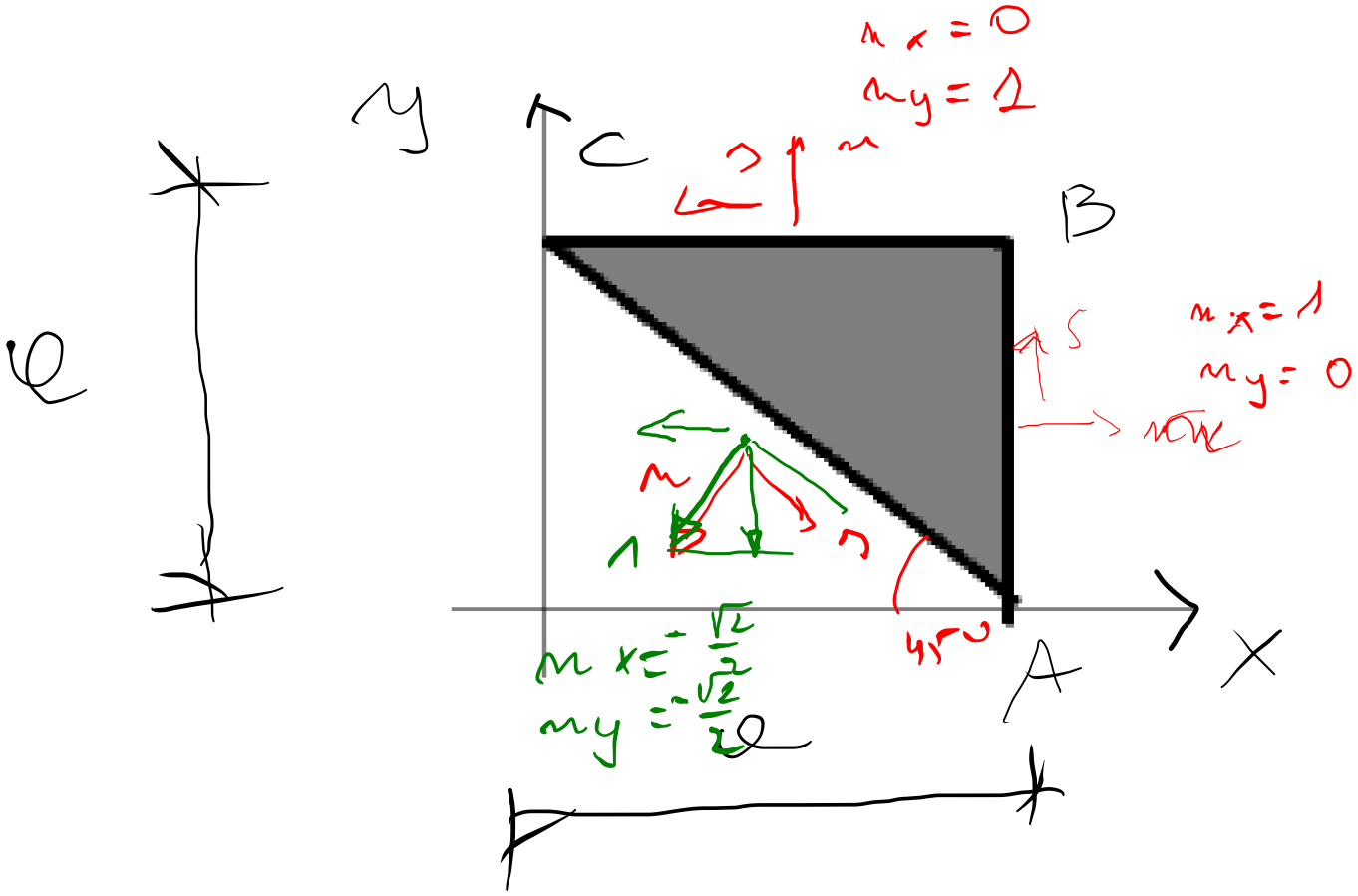

$$p_{nn} = \sigma_x n_x^2 + 2\tau_{xy} n_x n_y + \sigma_y n_y^2$$

$$p_{ns} = (\sigma_y - \sigma_x) n_x n_y + \tau_{xy}(n_x^2 - n_y^2)$$

$$p_{nn} = \sigma_x n_x^2 + 2\tau_{xy} n_x n_y + \sigma_y n_y^2$$

$$p_{ns} = (\sigma_y - \sigma_x) n_x n_y + \tau_{xy}(n_x^2 - n_y^2)$$

$p_{nn} = \sigma_x n_x^2 = \sigma_x = 0$

$p_{ns} = \tau_{xy} n_x^2 = \tau_{xy}$

$= -2c_x$

$= -2ca$

$n_x = 1$

$n_y = 0$

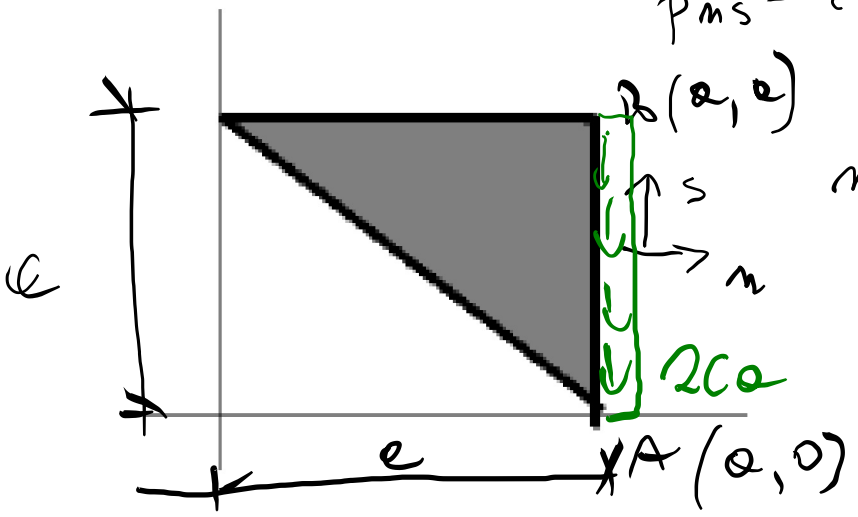

$$p_{nn} = \sigma_x n_x^2 + 2\tau_{xy} n_x n_y + \sigma_y n_y^2$$

$$p_{ns} = (\sigma_y - \sigma_x) n_x n_y + \tau_{xy}(n_x^2 - n_y^2)$$

$p_{nn} = \sigma_y = 2C_y = 2\varepsilon_y$

$p_{ns} = -\tau_{xy} = 2C_x$

$n_y = 1$

$n_x = 0$

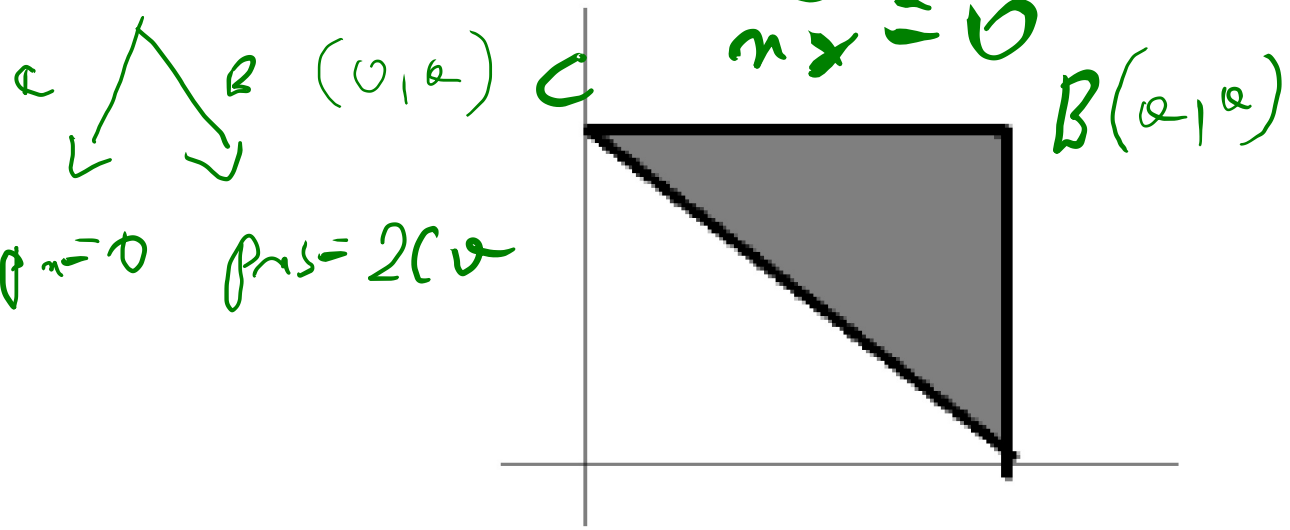

$p_{nn} = 0$ $p_{ns} = 2C_a$

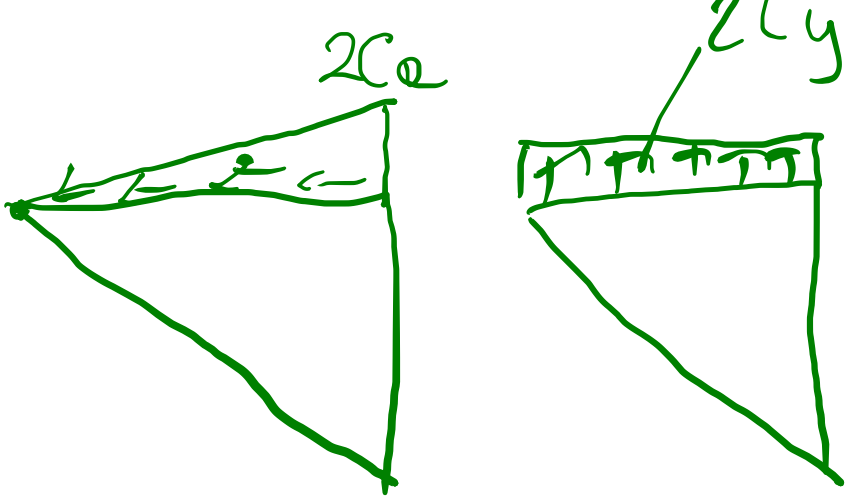

$p_{nn} = \sigma_x n_x^2 + 2\tau_{xy} n_x n_y + \sigma_y n_y^2$

$p_{ns} = (\sigma_y - \sigma_x) n_x n_y + \tau_{xy}(n_x^2 - n_y^2)$

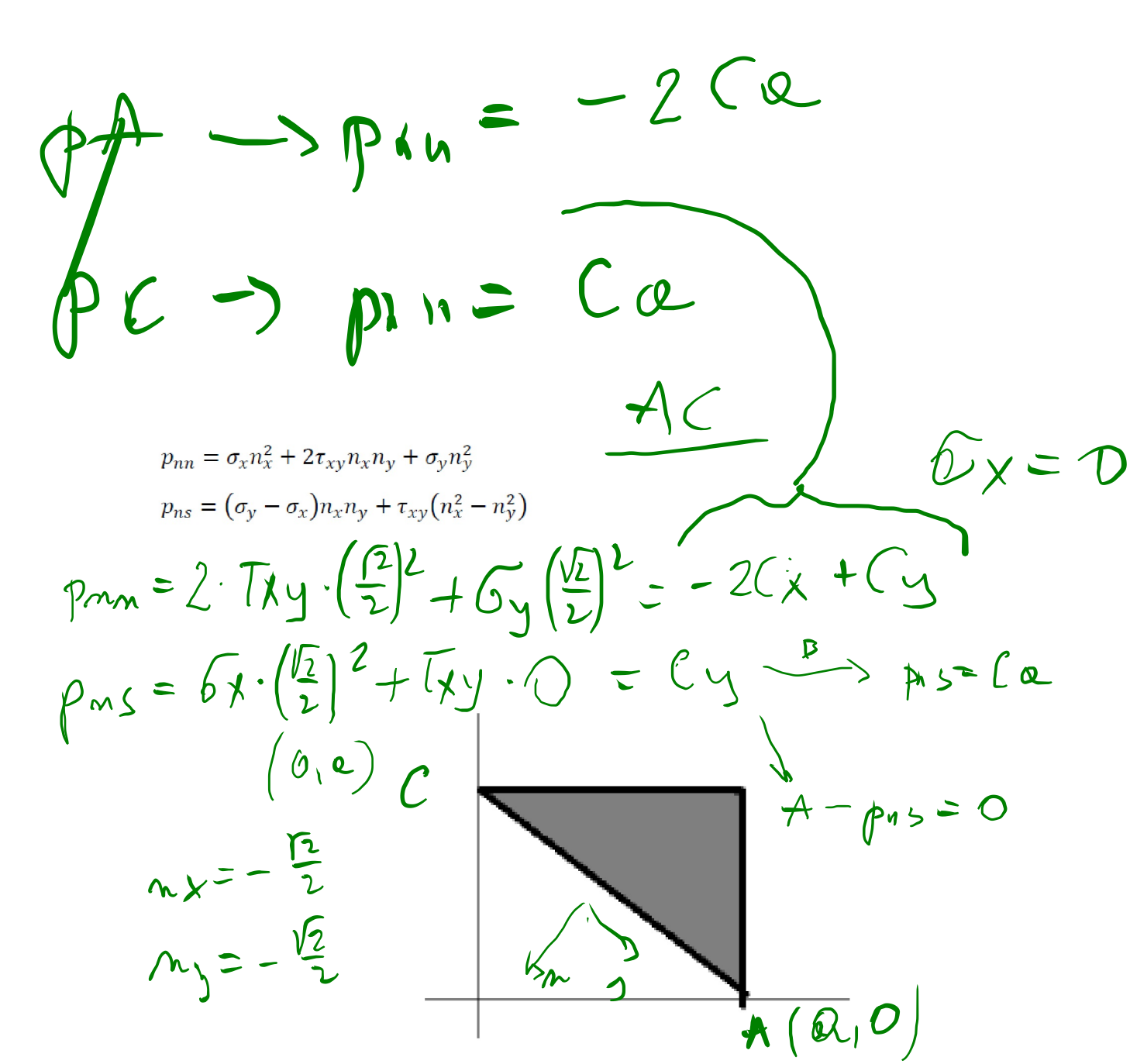

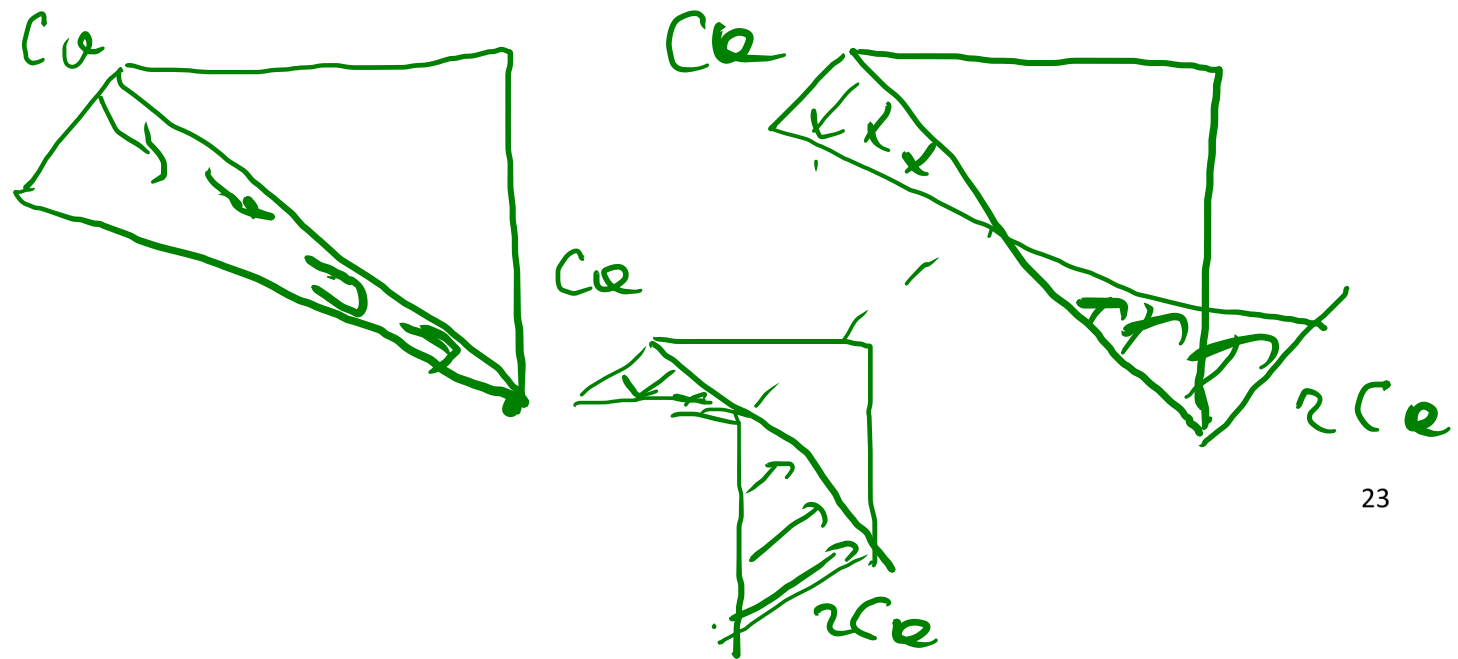

$$p_{nn} = \sigma_x n_x^2 + 2\tau_{xy} n_x n_y + \sigma_y n_y^2$$

$$p_{ns} = (\sigma_y - \sigma_x) n_x n_y + \tau_{xy}(n_x^2 - n_y^2)$$

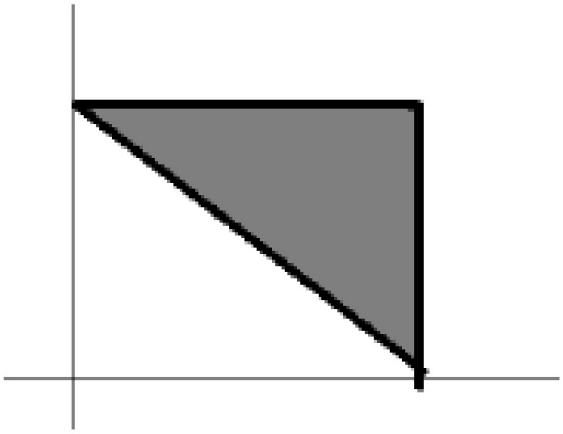

PRZYKŁAD 3

Obliczyć i narysować obciążenie tarczy:

F(X,Y) =C x y²

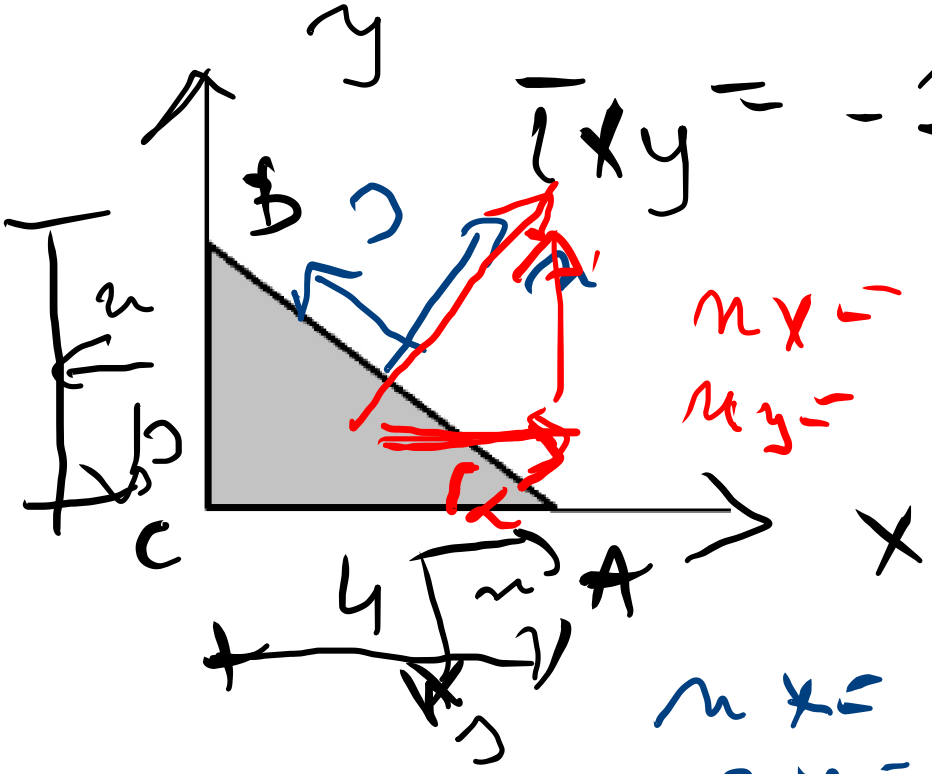

$$p_{nn} = \sigma_x n_x^2 + 2\tau_{xy} n_x n_y + \sigma_y n_y^2$$

$$p_{ns} = (\sigma_y - \sigma_x) n_x n_y + \tau_{xy}(n_x^2 - n_y^2)$$

AB

$p_{nn} = \sigma_x \left(\frac{3}{5}\right)^2 + 2\tau_{xy}\frac{3}{5}\cdot\frac{4}{5}$

$p_{ns} = (\sigma_y - \sigma_x)\cdot\frac{3}{5}\cdot\frac{4}{5} + \tau_{xy}\left(\left(\frac{3}{5}\right)^2 - \left(\frac{4}{5}\right)^2\right)$

$$p_{nn} = \sigma_x n_x^2 + 2\tau_{xy} n_x n_y + \sigma_y n_y^2$$

$$p_{ns} = (\sigma_y - \sigma_x) n_x n_y + \tau_{xy}(n_x^2 - n_y^2)$$

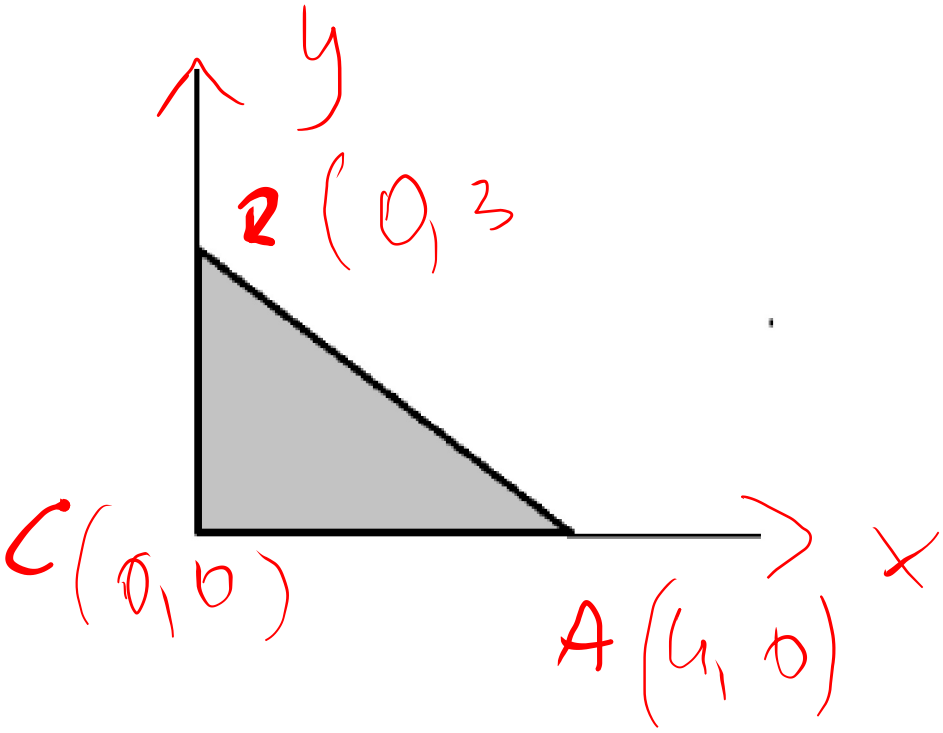

$$p_{nn} = \sigma_x n_x^2 + 2\tau_{xy} n_x n_y + \sigma_y n_y^2$$

$$p_{ns} = (\sigma_y - \sigma_x) n_x n_y + \tau_{xy}(n_x^2 - n_y^2)$$

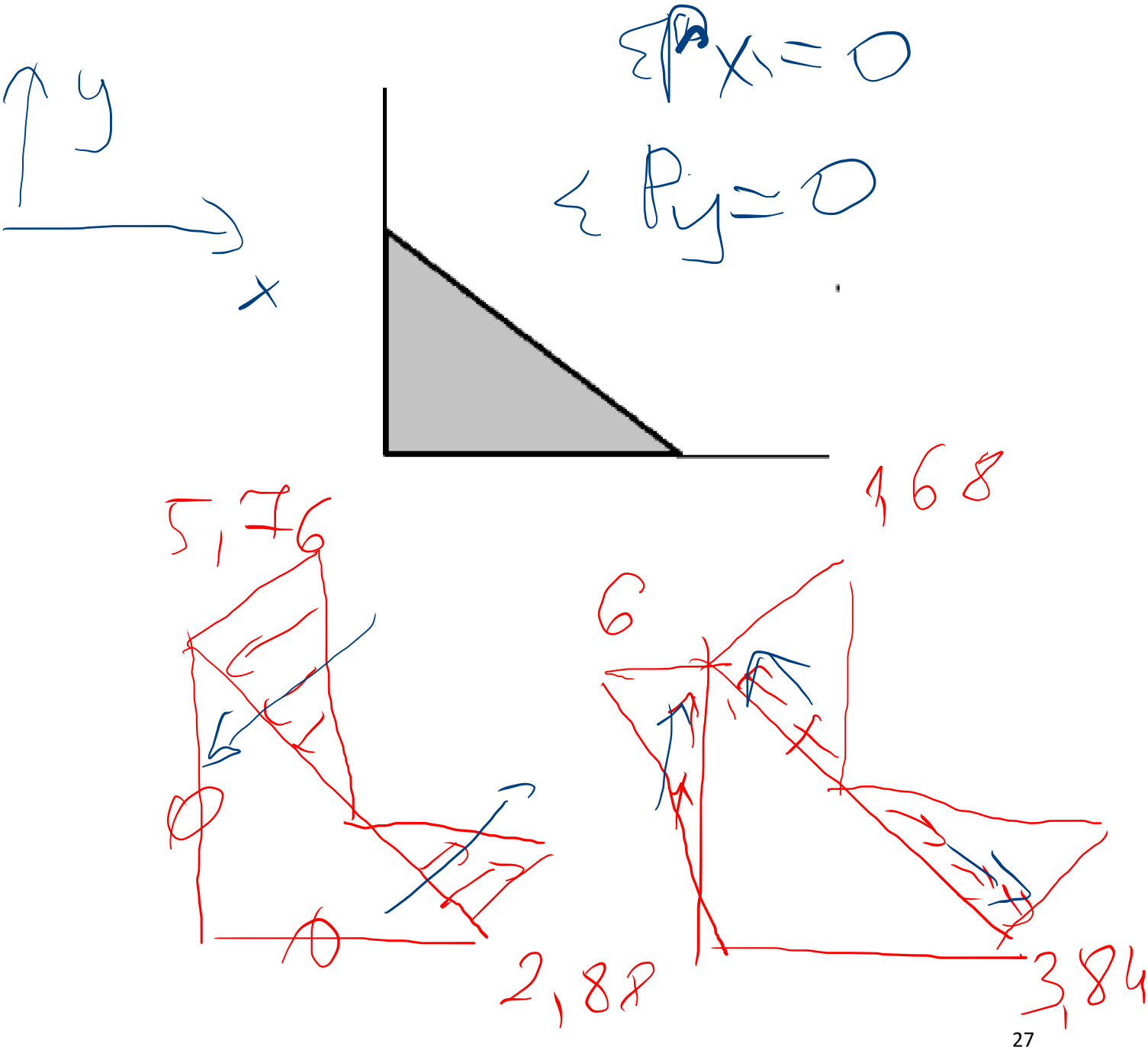

$$p_{nn} = \sigma_x n_x^2 + 2\tau_{xy} n_x n_y + \sigma_y n_y^2$$

$$p_{ns} = (\sigma_y - \sigma_x) n_x n_y + \tau_{xy}(n_x^2 - n_y^2)$$

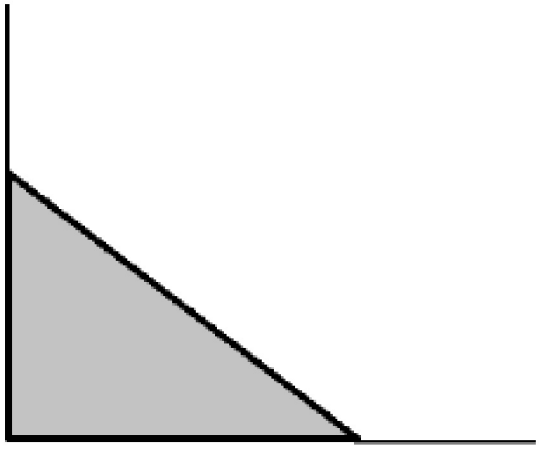

$$p_{nn} = \sigma_x n_x^2 + 2\tau_{xy} n_x n_y + \sigma_y n_y^2$$
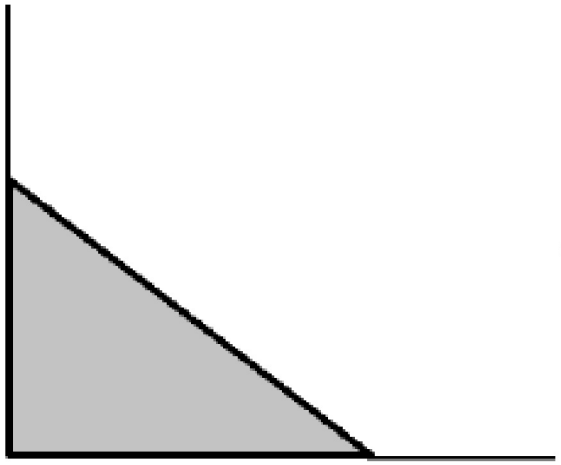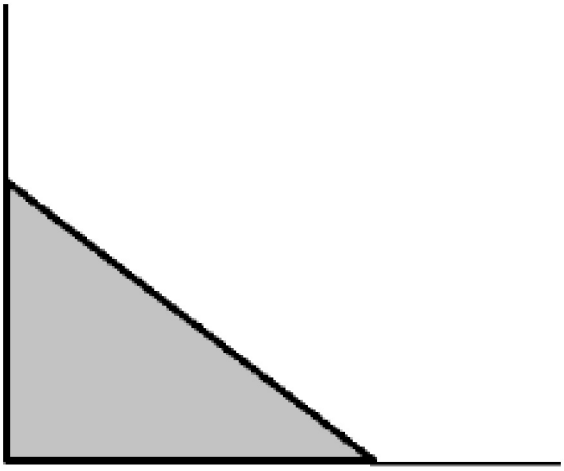
$$p_{ns} = (\sigma_y - \sigma_x) n_x n_y + \tau_{xy}(n_x^2 - n_y^2)$$